APPENDIX A

AIR QUALITY, GREENHOUSE GAS, AND HEALTH RISK ASSESSMENT

AIR QUALITY, GREENHOUSE GAS EMISSIONS, AND HEALTH RISK ASSESSMENT IMPACT ANALYSIS

PACOIMA SPREADING GROUNDS IMPROVEMENT PROJECT

CITY OF LOS ANGELES

LEAD AGENCY:
LOS ANGELES COUNTY FLOOD CONTROL DISTRICT

PREPARED BY:
VISTA ENVIRONMENTAL
1021 DIDRIKSON WAY
LAGUNA BEACH, CALIFORNIA 92651
GREG TONKOVICH, AICP
TELEPHONE (949) 510-5355
FACSIMILE (949) 715-3629

PROJECT NO. 13001

AUGUST 11, 2015

TABLE OF CONTENTS

1.0 Introduction 1

1.1 Purpose of Analysis and Study Objectives 1
1.2 Site Location and Study Area 1
1.3 Proposed Project Description 1
1.4 Sensitive Receptors in Project Vicinity 2
1.5 Standard Air Quality and GHG Regulatory Conditions 4
1.6 Summary of Analysis Results 6
1.7 Mitigation Measures Required for the Proposed Project 7

2.0 Pollutants 10

2.1 Criteria Pollutants 10
2.2 Toxic Air Contaminants 11
2.3 Greenhouse Gases 13
2.4 Global Warming Potential 15

3.0 Air Quality Management 17

3.1 Regulatory Setting 17

4.0 Atmospheric Setting 29

4.1 Local Climate 29
4.2 Monitored Local Air Quality 30
4.3 Toxic Air Contaminant Levels in the South Coast Air Basin 32

5.0 Modeling Parameters and Assumptions 33

5.1 Criteria Pollutant Emissions 33
5.2 Toxic Air Contaminant Emissions 34

6.0 Air Quality Standards 39

6.1 Regional Air Quality 39
6.2 Local Air Quality 39
6.3 Toxic Air Contaminants 40
6.4 Odor Impacts 40
6.5 Greenhouse Gases 41

7.0 Impact Analysis 42

7.1 CEQA Thresholds of Significance 42
7.2 Air Quality Compliance 42
7.3 Air Quality Standard Violation 43
7.4 Cumulative Net Increase in Non-Attainment Pollution 53
7.5 Sensitive Receptors 54
7.6 Objectionable Odors 54
7.7 Generation of Greenhouse Gas Emissions 56
7.8 Greenhouse Gas Plan Consistency 57

8.0 References 58

TABLE OF CONTENTS CONTINUED

APPENDIX

Appendix A – 14-Cubic Yard Haul Trucks Alternative CalEEMod Model Daily Printouts

Appendix B – 18-Cubic Yard Haul Trucks Alternative CalEEMod Model Daily Printouts

Appendix C – EMFAC2011 Printouts

Appendix D – AERMOD Model Onsite PM10 Printouts

Appendix E – AERMOD Model Onsite PM2.5 Printouts

Appendix F – AERMOD Model Diesel PM10 Printouts for Spreading Grounds Area

Appendix G – AERMOD Model Diesel PM10 Printouts for Pits Area

Appendix H – AERMOD Model Diesel TOG Printouts for Spreading Grounds Area

Appendix I – AERMOD Model Diesel TOG Printouts for Pits Area

Appendix J – 14-Cubic Yard Haul Trucks Alternative CalEEMod Model Annual Printouts

Appendix K – 18-Cubic Yard Haul Trucks Alternative CalEEMod Model Annual Printouts

LIST OF FIGURES

Figure 1 – Project Local Study Area 8
Figure 2 – Proposed Site Plan 9
Figure 3 – Air Dispersion Model Source and Receptor Locations near the Spreading Basins 37
Figure 4 – Air Dispersion Model Source and Receptor Locations near the Pits 38
Figure 5 – Modeled Spreading Grounds Area Diesel PM10 Concentrations 49
Figure 6 – Modeled Pits Area Diesel PM10 Concentrations 50

LIST OF TABLES

Table A – Diesel Emission Pollutants that Cause Acute and Chronic Health Impacts 12
Table B – Global Warming Potentials, Atmospheric Lifetimes and Abundances of GHGs 16
Table C – State and Federal Criteria Pollutant Standards 18
Table D – South Coast Air Basin Attainment Status 19
Table E – San Fernando Monthly Climate Data 30
Table F – Local Area Air Quality Monitoring Summary 31
Table G – SCAQMD Regional Pollutant Emission Thresholds of Significance 39
Table H – SCAQMD Local Air Quality Thresholds of Significance for Construction 40
Table I – Construction-Related Criteria Pollutant Emissions 44
Table J – Screening of the Local Construction Emissions at the Nearest Receptors 45
Table K – Local PM10 and PM2.5 Concentrations at Nearby Receptors 46
Table L – Diesel PM10 Levels and Cancer Risks 48
Table M – Acute Non-Cancer Assessment 52
Table N – Project Related Greenhouse Gas Annual Emissions 56

ACRONYMS AND ABBREVIATIONS

AQMP	Air Quality Management Plan
CAAQS	California Ambient Air Quality Standards
CAPCOA	California Air Pollution Control Officers Association
CARB	California Air Resources Board
CCAA	California Clean Air Act
CEC	California Energy Commission
CEQA	California Environmental Quality Act
cfs	Cubic feet per second
CO	Carbon monoxide
CO_2	Carbon dioxide
CO_2e	Carbon dioxide equivalent
DPM	Diesel particulate matter
EPA	Environmental Protection Agency
ºF	Fahrenheit
GHG	Greenhouse gas
GWP	Global warming potential
HFCs	Hydrofluorocarbons
IPCC	International Panel on Climate Change
LACDPW	Los Angeles County Department of Public Works
LACFCD	Los Angeles County Flood Control District
LST	Localized Significant Thresholds
MSAT	Mobile Source Air Toxics
$MTCO_2e$	Metric tons of carbon dioxide equivalent
$MMTCO_2e$	Million metric tons of carbon dioxide equivalent
MPO	Metropolitan Planning Organization
NAAQS	National Ambient Air Quality Standards
NO_x	Nitrogen oxides
NO_2	Nitrogen dioxide
O_3	Ozone
PM	Particle matter
PM10	Particles that are less than 10 micrometers in diameter
PM2.5	Particles that are less than 2.5 micrometers in diameter
PPM	Parts per million

PPB	Parts per billion
RCP	Reinforced Concrete Pipe
ROG	Reactive Organic Gases
RTIP	Regional Transportation Improvement Plan
SCAQMD	South Coast Air Quality Management District
SIP	State Implementation Plan
SO_x	Sulfur oxides
TAC	Toxic air contaminants
TOG	Total Organic Gases
UNFCCC	United Nations' Framework Convention on Climate Change
VOC	Volatile organic compounds

1.0 INTRODUCTION

1.1 Purpose of Analysis and Study Objectives

This Air Quality, Greenhouse Gas (GHG) Emissions, and Health Risk Assessment (HRA) Impact Analysis has been completed to determine the air quality, GHG emissions, and toxic air contaminant (TAC) impacts associated with the proposed Pacoima Spreading Grounds Improvement Project (proposed project). The following is provided in this report:

- A description of the proposed project;
- A description of the atmospheric setting;
- A description of the criteria pollutants and greenhouse gases (GHGs);
- A description of the air quality regulatory framework;
- A description of the air quality and GHG emissions thresholds including the California Environmental Quality Act (CEQA) significance thresholds;
- An analysis of the short-term construction related and long-term operational air quality and GHG emissions impacts;
- An analysis of the cancer risk and non-cancer acute and chronic health risk from diesel emissions created during construction of the proposed project;
- An analysis of the conformity of the proposed project with the South Coast Air Quality Management District (SCAQMD) Air Quality Management Plan (AQMP); and
- An analysis of the conformity of the proposed project with all applicable GHG emissions reduction plans and policies.

1.2 Site Location and Study Area

The project site is located in the northern portion of the City of Los Angeles (City) and on the west side of the Pacoima Diversion Channel. The project site is approximately 169 acres in area, bisected by Arleta Avenue and Devonshire Street and is hydraulically connected by pipes underneath these roads. The project site is bordered by Filmore Street to the southeast, Woodman Avenue to the west, San Jose Street to the north, and Arleta Avenue to the northeast and is bisected by Devonshire Street. The project local study area is shown on page 8 in Figure 1.

1.3 Proposed Project Description

The principle objective of the proposed project is to increase groundwater recharge of the San Fernando Groundwater Basin by increasing the facility's storage capacity and restoring its percolation rate through excavation and removal of underlying clay layers. The proposed project would include improvements to the intake structure as well as expansion and reconfiguration of the spreading basins. The proposed site plan is shown on page 9 in Figure 2.

Intake Structure Improvements

The existing intake structure will be improved by replacing the current intake canal with four 54-inch diameter RCPs. The pipes will extend from the headworks to the culverts that convey water to the spreading basins. After the pipes are installed, the intake channel will be backfilled with approximately 27,850 cubic yards of sediment removed from the spreading basins. Due to the variability of uncontrolled flows in Pacoima Diversion Channel, careful operation of the radial gate is currently required to regulate flows into

the intake canal. When flows in excess of 600 cubic feet per second (cfs) enter the intake canal, water can potentially overtop the intake canal, resulting in localized flooding. Replacing the intake canal with pipes will restrict the intake to the design flow rate of 600 cfs and eliminate the potential for overtopping the intake canal.

Recharge Basin Reconfiguration and Sediment Removal

The recharge basins will be reconfigured and deepened to allow for greater percolation and capacity. Approximately 1.6 million cubic yards of sediment will be excavated in order to completely remove the underlying clay layers; however, only 1.37 million cubic yards of sediment will be exported from the site. The remainder of the sediment will be used to backfill the existing intake channel or be returned to the spreading basins to bring the basin inverts up to their finished elevation.

The proposed project includes transportation and placement of excavated material at facilities prepared and designated to accept such material. A total of three sediment disposal sites have been identified for consideration, either individually or in combination: Boulevard Pit, Sheldon Pit, and the Cal-Mat Pit. All three sites are located in the Sun Valley area of Los Angeles, approximately 5.7 miles southeast of the Pacoima Spreading Grounds.

Two haul routes from the Pacoima Spreading Grounds site to the sediment disposal site/s have been identified. One haul route would be to travel northeast on Paxton Street to access the I-5 Southbound Freeway, taking the exit towards Sheldon Street, and either traveling northeast along Sheldon Street after turning (right) onto Laurel Canyon Boulevard to access either the Sheldon Pit or the Cal-Mat Pit, or heading north on Laurel Canyon Boulevard to turn east (right) on Branford Street to access the Boulevard Pit (Haul Route A; 60 percent of trips). The other haul route would be to travel northeast on Paxton Street to access San Fernando Road. Heading south on San Fernando Road, the trucks would either turn northeast (left) on Sheldon Street to access the Sheldon Pit or Cal-Mat Pit, or turn southwest (right) on Sheldon Street and then head north (right) on Laurel Canyon Boulevard to turn east (right) on Branford Street to access the Boulevard Pit (Haul Route B, 40 percent of trips).

Project Schedule

The proposed project is expected to occur over an 18-month period, between Spring 2016 and Fall 2017. Excavation activities will take place year-round, and the spreading grounds will not be operated for the duration of the proposed project's construction. Activities will take place six days a week between the hours of 7:00 a.m. to 7:00 p.m. on Monday through Friday and 8:00 a.m. to 5:00 p.m. on Saturday.

1.4 Sensitive Receptors in Project Vicinity

The project site is located in a residential community and is surrounded on all sides by residential as well as park and worship uses. As detailed in the site plan shown in Figure 2, the proposed improvements would disturb most but not all of the property, as there are areas around the perimeter of the spreading basins that would not be disturbed. The nearby off-site sensitive receptors to each portion of the proposed project are detailed below and the distances are based on the distance from the proposed disturbed areas on the project site to the nearest structure for homes and the church or use area for parks.

West Settling Basin

The proposed West Settling Basin is located on the northern side of the project site and is bounded by Arleta Avenue to the northeast. The nearby sensitive receptors consist of: single-family homes located on the south side of San Jose Street and as near as 40 feet north of the proposed improvements; and single-family homes located on the northeast side of Arleta Avenue and as near as 130 feet northeast of the proposed improvements to the West Settling Basin.

East Settling Basin

The proposed East Settling Basin is located on the eastern side of the project site and is bounded by Arleta Avenue to the northeast and Devonshire Street to the south. The nearby sensitive receptors consist of: Devonshire Arleta Park that is located as near as 220 feet east of the proposed improvements; and single-family homes located on the east side of Pacoima Diversion Channel and as near as 280 feet east of the proposed improvements to the East Settling Basin.

Basin 1

The proposed Basin 1 is located on the eastern corner of the project site and is bounded by Devonshire Street to the north, Pacoima Diversion Channel to the east and Filmore Street to the southeast. The nearby sensitive receptors consist of: Devonshire Arleta Park that is located as near as 220 feet northeast of the proposed improvements; single-family homes located on the east side of Pacoima Diversion Channel and as near as 170 feet east of the proposed improvements; and single- and multi-family homes located on the southeast side of Filmore Street and as near as 125 feet southeast of the proposed improvements to Basin 1.

Basin 2

The proposed Basin 2 is located on the southeastern side of the project site and is bounded by Devonshire Street to the north and Filmore Street to the southeast. The nearby sensitive receptors consist of single-family homes located on the southeast side of Filmore Street and as near as 120 feet southeast of the proposed improvements to Basin 2.

Basin 3

The proposed Basin 3 is located on the northern side of the project site and is bounded by West Settling Basin to the east and the SCE Easement to the west. The nearby sensitive receptors consist of: single-family homes located on the south side of San Jose Street and as near as 70 feet north of the proposed improvements; and single-family homes on the east side of Hiawatha Street and as near as 70 feet west of the proposed improvements to Basin 3.

Basin 4

The proposed Basin 4 is located on the northwestern corner of the project site and is bounded by the SCE Easement to the east and Devonshire Street to the south. The nearby sensitive receptors consist of: single-family homes located on the south side of Hiawatha Street and as near as 50 feet north of the proposed improvements; and single-family homes on the east side of Blackhawk Street and as near as 60 feet west of the proposed improvements to Basin 4.

Basin 5

The proposed Basin 5 is located on the western side of the project site and is bounded by Devonshire Street to the north and Devonwood Park to the west. The nearby sensitive receptors consist of: Devonwood Park located as near as 30 feet west of the proposed improvements; and single-family homes located on the north side of Devonshire Street and as near as 135 feet north of the proposed improvements to Basin 5.

Basin 6

The proposed Basin 6 is located on the southwest corner of the project site and is bounded by and Devonwood Park to the north, Woodman Avenue to the southwest and Filmore Street to the southeast. The nearby sensitive receptors consist of: Devonwood Park located as near as 40 feet north of the proposed improvements; the New Apostolic Church located on the east side of Woodman Avenue and as near as 30 feet west of the proposed improvements; and single-family homes located on the east side of Woodman Avenue and as near as 30 feet west of the proposed improvements to Basin 6.

Diversion Channel Intake

The proposed diversion channel intake improvements is located in the northeast corner of the project site and is bounded by the Pacoima Diversion Channel to the east and Arleta Avenue to the southwest. The nearby sensitive receptors consist of single-family homes located on the east side of Minnehaha Street and as near as 40 feet west of the proposed improvements to the diversion channel intake.

Haul Routes

The proposed haul routes would consist of the haul trucks traveling from the project site on Paxton Street to either Interstate 5 where they would exit at Sheldon Street or to stay on Paxton Street to San Fernando Avenue. Other streets that may be utilized by the haul trucks include Laurel Canyon Boulevard, Branford Street, and Glenoaks Boulevard.

The nearby sensitive receptors on Paxton Street consist of: single- and multi-family homes that are located as near as 20 feet from the travel lanes; Ritchie Valens Park that is located as near as 15 feet from the travel lanes; and Telfair Elementary School that is located as near as 25 feet from the travel lanes of Paxton Street.

The nearby sensitive receptors on San Fernando Road consist of: single- and multi-family homes as near as 110 feet from the travel lanes; and Pacifica Hospital of the Valley that is located as near as 180 feet from the travel lanes of San Fernando Road.

The nearby sensitive receptors on Sheldon Street consist of: single- and multi-family homes as near as 20 feet from the travel lanes; and Sun Valley High School located as near as 25 feet from the travel lanes of Sheldon Street.

The nearby sensitive receptors on Laurel Canyon Boulevard consist of: multi-family and mobile homes as near as 25 feet from the travel lanes; and Fernangeles Recreation Center located as near as 15 feet from the travel lanes of Laurel Canyon Boulevard.

The nearby sensitive receptors on Branford Street consist of single- and multi-family homes as near as 25 feet from the travel lanes of Branford Street.

There are no sensitive receptors in the vicinity of Glenoaks Boulevard that would be utilized by the haul trucks for the proposed project.

1.5 Standard Air Quality and GHG Regulatory Conditions

The proposed project will be required to comply with the following regulatory conditions from the SCAQMD and State of California (State).

South Coast Air Quality Management District Rules

The following lists the SCAQMD rules that are applicable to all earth moving projects in the South Coast Air Basin.

<u>Rule 402 - Nuisance</u>

Rule 402 prohibits a person from discharging from any source whatsoever such quantities of air contaminants or other material which causes injury, detriment, nuisance, or annoyance to any considerable number of persons or to the public, or which endanger the comfort, repose, health or safety of any such persons or the public, or which cause, or have a natural tendency to cause, injury or damage to business or property. Compliance with Rule 402 will reduce local air quality and odor impacts to nearby sensitive receptors. It should be noted that the SCAQMD receives and investigates odor complaints from nearby

residents and if six or more odor events are reported in a year the SCAQMD will consider the odor impact a nuisance and has the authority to require the offender to implement measures to reduce the odor impacts.

Rule 403- Fugitive Dust

Rule 403 governs emissions of fugitive dust during construction activities and requires that no person shall cause or allow the emissions of fugitive dust such that dust remains visible in the atmosphere beyond the property line or the dust emission exceeds 20 percent opacity, if the dust is from the operation of a motorized vehicle. Compliance with this rule is achieved through application of standard Best Available Control Measures, which include but are not limited to the measures below. The proposed project has the potential to be classified a "Large Operation" as it may contain 50 or more acres of disturbed surface area and the daily earth-moving or throughput volume may exceed 5,000 cubic yards. Compliance with the following rules would reduce local air quality impacts to nearby sensitive receptors.

- Submit a Large Operation Notification to the SCAQMD and maintain daily records of the specific dust control actions taken.
- Install and maintain project signage on the various visible places around the project site that provides a contact person and phone number to for persons to call when they see dust leaving the project site. The signage shall also have a phone number for the SCAQMD compliance office.
- Utilize either a pad of washed gravel 50 feet long, 100 feet of paved surface, a wheel shaker, or a wheel washing device to remove material from vehicle tires and undercarriages before leaving project site.
- Do not allow any track out of material to extend more than 25 feet onto a public roadway and remove all track out at the end of each workday.
- Water all exposed areas on active sites at least three times per day and pre-water all areas prior to clearing and soil moving activities.
- Pre-water all material to be exported prior to loading, and either cover all loads or maintain at least 2 feet of freeboard in accordance with the requirements of California Vehicle Code Section 23114.
- Restrict traffic speeds on all unpaved roads to 15 miles per hour or less.
- Maintain a soil moisture content at a minimum of 12 percent that shall be measured a minimum of two times during the first three hours and two times each subsequent four hour periods each day.
- Water all dirt roads at least once per every two hours of active operations or apply a chemical stabilizer in sufficient quantity and frequency to maintain a stabilized surface.

State of California Rules

The following lists the State of California rules that are applicable to all earth moving projects in the State.

CARB Regulation for In-Use Off-Road Diesel Vehicles

On July 26, 2007, the California Air Resources Board (CARB) adopted a regulation to reduce diesel particulate matter (DPM) and NOx emissions from in-use off-road heavy-duty diesel vehicles in California. Such vehicles are used in construction, mining, and industrial operations. The regulation limits idling to no more than five consecutive minutes, requires reporting and labeling, and requires disclosure of the regulation upon vehicle sale. Performance requirements of the rule are based on a fleet's average NOx emissions, which can be met by replacing older vehicles with newer, cleaner vehicles or by applying exhaust retrofits. The regulation was amended in 2010 to delay the original timeline of the performance requirement making the first compliance deadline January 1, 2014 for large fleets (over 5,000 horsepower), 2017 for medium fleets (2,501-5,000 horsepower), and 2019 for small fleets (2,500 horsepower or less). Currently,

no commercial company in California may add any equipment to their fleet that has a Tier 0 engine and medium and large fleets are restricted from adding Tier 1 engines. By January 1, 2016 small fleet will also be restricted from adding Tier 1 engines to their fleets and by January 1, 2018 medium and large fleets will be restricted from adding Tier 2 engines to their fleets. It should be noted that commercial fleets may continue to use their existing Tier 0 and 1 equipment, if they can demonstrate that the average emissions from their entire fleet emissions meet the NOx emissions targets.

CARB Resolution 08-43 for On-Road Diesel Truck Fleets

On December 12, 2008 the CARB adopted Resolution 08-43, which limits NOx, PM10 and PM2.5 emissions from on-road diesel truck fleets that operate in California. On October 12, 2009 Executive Order R-09-010 was adopted that codified Resolution 08-43 into Section 2025, title 13 of the California Code of Regulations. This regulation requires that by the year 2023 all commercial diesel trucks that operate in California shall meet model year 2010 (Tier 4 Final) or latter emission standards. In the interim period, this regulation provides annual interim targets for fleet owners to meet. By January 1, 2014, 50 percent of a truck fleet is required to have installed Best Available Control Technology (BACT) for NOx emissions and 100 percent of a truck fleet installed BACT for PM10 emissions. This regulation also provides a few exemptions including a onetime per year 3-day pass for trucks registered outside of California. All on-road diesel trucks operating on the project site will be required to comply with Resolution 08-43.

1.6 Summary of Analysis Results

The following is a summary of the proposed project's impacts with regard to the State CEQA Guidelines air quality and GHG emissions checklist questions.

Conflict with or obstruct implementation of the applicable air quality plan?

Less than significant impact.

Violate any air quality standard or contribute substantially to an existing or projected air quality violation?

Less than significant impact.

Result in a cumulatively considerable net increase of any criteria pollutant for which the project region is non-attainment under an applicable Federal or State ambient air quality standard?

Less than significant impact.

Expose sensitive receptors to substantial pollutant concentrations?

Less than significant impact.

Create objectionable odors affecting a substantial number of people?

Potentially significant impact. Implementation of Mitigation Measure 1 would reduce the impact to less than significant levels.

Generate GHG emissions, either directly or indirectly, that may have a significant impact on the environment?

Less than significant impact.

Conflict with any applicable plan, policy or regulation of an agency adopted for the purpose of reducing the emissions of GHGs?

Less than significant impact.

1.7 Mitigation Measures Required for the Proposed Project

This analysis found that implementation of the State and SCAQMD air quality and GHG emissions reductions regulations detailed in Section 1.5 above were adequate to limit criteria pollutants, toxic air contaminants, odors, and GHG emissions from the proposed project to less than significant levels. No mitigation measures are required for the proposed project with respect to air quality and GHG emissions.

Project Boundary

1:75,000

0 0.5 1 2
Miles

CHAMBERS GROUP

Version Date: 6/18/2013

VISTA ENVIRONMENTAL

Figure 1
Project Local Study Area

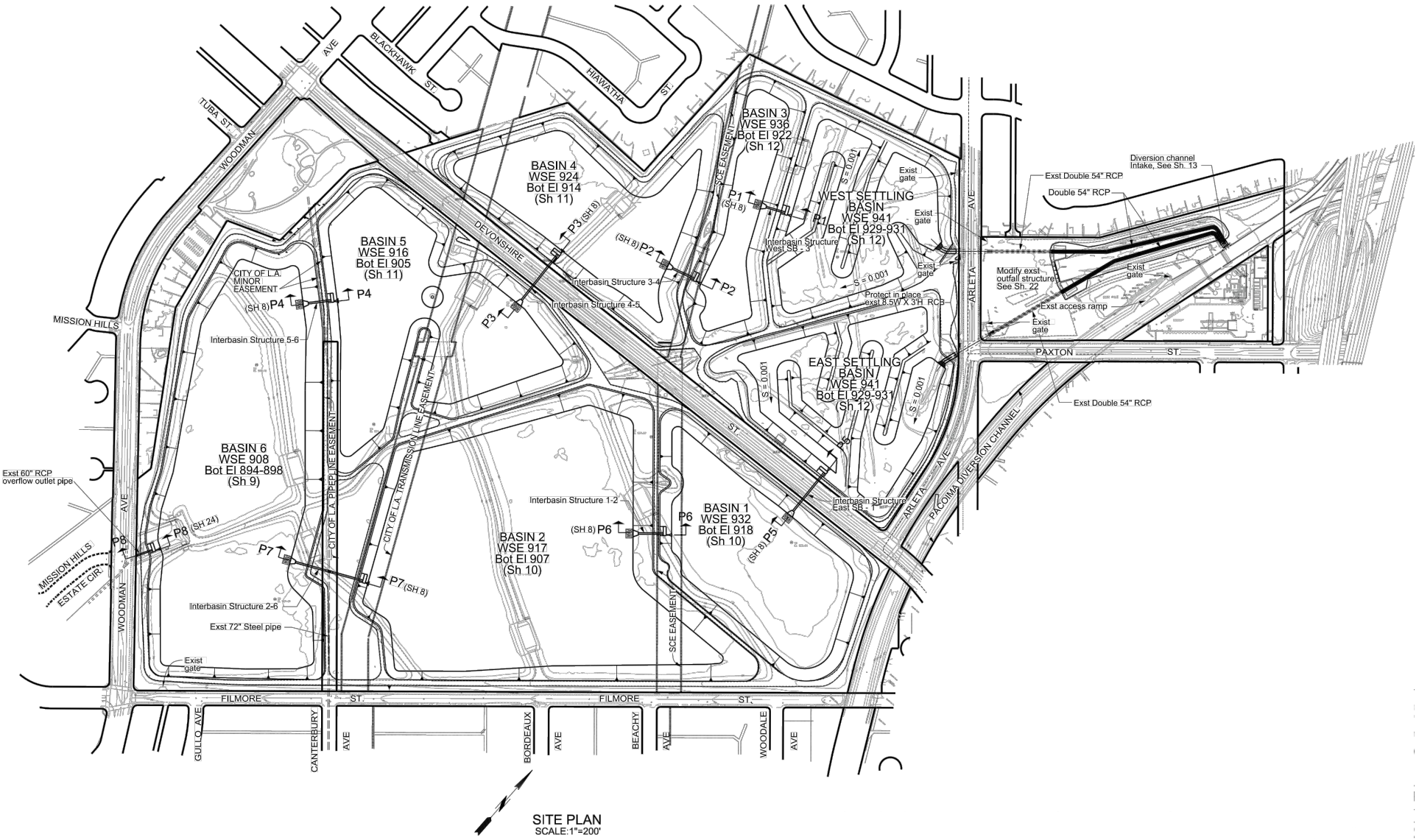

SOURCE: County of Los Angeles Department of Public Works.

VISTA ENVIRONMENTAL

Figure 2
Proposed Site Plan

2.0 POLLUTANTS

Pollutants are generally classified as either criteria pollutants or non-criteria pollutants. Federal ambient air quality standards have been established for criteria pollutants, whereas no ambient standards have been established for non-criteria pollutants. For some criteria pollutants, separate standards have been set for different periods. Most standards have been set to protect public health. For some pollutants, standards have been based on other values (such as protection of crops, protection of materials, or avoidance of nuisance conditions). A summary of federal and state ambient air quality standards is provided in the Regulatory Framework section.

2.1 Criteria Pollutants

The criteria pollutants consist of: ozone, nitrogen oxides, carbon monoxide, sulfur oxides, lead, and particulate matter. These pollutants can be harmful to human health and the environment, and cause property damage. The Environmental Protection Agency (EPA) calls these pollutants "criteria" air pollutants because it regulates them by developing human health-based and/or environmentally-based criteria for setting permissible levels. The following provides descriptions of each of the criteria pollutants.

Nitrogen Oxides

Nitrogen Oxides (NOx) is the generic term for a group of highly reactive gases which contain nitrogen and oxygen. While most NOx are colorless and odorless, concentrations of nitrogen dioxide (NO_2) can often be seen as a reddish-brown layer over many urban areas. NOx form when fuel is burned at high temperatures, as in a combustion process. The primary manmade sources of NO_x are motor vehicles, electric utilities, and other industrial, commercial, and residential sources that burn fuel. NOx reacts with other pollutants to form, ground-level ozone, nitrate particles, acid aerosols, as well as NO_2, which cause respiratory problems. NO_x and the pollutants formed from NO_x can be transported over long distances, following the patterns of prevailing winds. Therefore controlling NOx is often most effective if done from a regional perspective, rather than focusing on the nearest sources.

Ozone

Ozone is not usually emitted directly into the air but in the vicinity of ground-level is created by a chemical reaction between NOx and volatile organic compounds (VOC) in the presence of sunlight. Motor vehicle exhaust, industrial emissions, gasoline vapors, chemical solvents as well as natural sources emit NOx and VOC that help form ozone. Ground-level ozone is the primary constituent of smog. Sunlight and hot weather cause ground-level ozone to form with the greatest concentrations usually occurring downwind from urban areas. Ozone is subsequently considered a regional pollutant. Ground-level ozone is a respiratory irritant and an oxidant that increases susceptibility to respiratory infections and can cause substantial damage to vegetation and other materials. Because NOx and VOC are ozone precursors, the health effects associated with ozone are also indirect health effects associated with significant levels of NOx and VOC emissions.

Carbon Monoxide

Carbon monoxide (CO) is a colorless, odorless gas that is formed when carbon in fuel is not burned completely. It is a component of motor vehicle exhaust, which contributes approximately 56 percent of all CO emissions nationwide. In cities, 85 to 95 percent of all CO emissions may come from motor vehicle exhaust. Other sources of CO emissions include industrial processes (such as metals processing and chemical manufacturing), residential wood burning, and natural sources such as forest fires. Woodstoves, gas stoves, cigarette smoke, and unvented gas and kerosene space heaters are indoor sources of CO. The highest levels of CO in the outside air typically occur during the colder months of the year when inversion conditions are more frequent. The air pollution becomes trapped near the ground beneath a layer of warm

air. CO is described as having only a local influence because it dissipates quickly. Since CO concentrations are strongly associated with motor vehicle emissions, high CO concentrations generally occur in the immediate vicinity of roadways with high traffic volumes and traffic congestion, active parking lots, and in automobile tunnels. Areas adjacent to heavily traveled and congested intersections are particularly susceptible to high CO concentrations.

CO is a public health concern because it combines readily with hemoglobin and thus reduces the amount of oxygen transported in the bloodstream. The health threat from lower levels of CO is most serious for those who suffer from heart disease such as angina, clogged arteries, or congestive heart failure. For a person with heart disease, a single exposure to CO at low levels may cause chest pain and reduce that person's ability to exercise; repeated exposures may contribute to other cardiovascular effects. High levels of CO can affect even healthy people. People who breathe high levels of CO can develop vision problems, reduced ability to work or learn, reduced manual dexterity, and difficulty performing complex tasks. At extremely high levels, CO is poisonous and can cause death.

Sulfur Oxides

Sulfur Oxide (SOx) gases are formed when fuel containing sulfur, such as coal and oil is burned, as well as from the refining of gasoline. SOx dissolves easily in water vapor to form acid and interacts with other gases and particles in the air to form sulfates and other products that can be harmful to people and the environment.

Lead

Lead is a metal found naturally in the environment as well as manufactured products. The major sources of lead emissions have historically been motor vehicles and industrial sources. Due to the phase out of leaded gasoline, metal processing is now the primary source of lead emissions to the air. High levels of lead in the air are typically only found near lead smelters, waste incinerators, utilities, and lead-acid battery manufacturers. Exposure of fetuses, infants and children to low levels of Pb can adversely affect the development and function of the central nervous system, leading to learning disorders, distractibility, inability to follow simple commands, and lower intelligence quotient. In adults, increased lead levels are associated with increased blood pressure.

Particulate Matter

Particle matter (PM) is the term for a mixture of solid particles and liquid droplets found in the air. PM is made up of a number of components including acids (such as nitrates and sulfates), organic chemicals, metals, and soil or dust particles. The size of particles is directly linked to their potential for causing health problems. Particles that are less than 10 micrometers in diameter (PM10) are the particles that generally pass through the throat and nose and enter the lungs. Once inhaled, these particles can affect the heart and lungs and cause serious health effects. Particles that are less than 2.5 micrometers in diameter (PM2.5) have been designated as a subset of PM10 due to their increased negative health impacts and its ability to remain suspended in the air longer and travel further.

2.2 Toxic Air Contaminants

Toxic air contaminants (TACs) is a term that is defined under the California Clean Air Act and consists of the same substances that are defined as Hazardous Air Pollutants (HAPs) in the Federal Clean Air Act. There are over 700 hundred different types of TACs with varying degrees of toxicity. Sources of TACs include industrial processes such as petroleum refining and chrome plating operations, commercial operations such as gasoline stations and dry cleaners, and motor vehicle exhaust. Cars and trucks release at least 40 different toxic air contaminants. The most important of these TACs, in terms of health risk, are diesel particulates, benzene, formaldehyde, 1,3-butadiene, and acetaldehyde. Public exposure to TACs can

result from emissions from normal operations as well as from accidental releases. Health effects of TACs include cancer, birth defects, neurological damage, and death.

Diesel Particulate Matter

According to *The California Almanac of Emissions and Air Quality 2013 Edition*, the majority of the estimated health risk from TACs can be attributed to relatively few compounds, the most important of which is diesel particulate matter (DPM). DPM is a subset of PM2.5 because the size of diesel particles are typically 2.5 microns and smaller. The identification of DPM as a TAC in 1998 led the California Air Resources Board (CARB) to adopt the Risk Reduction Plan to Reduce Particulate Matter Emissions from Diesel-fueled Engines and Vehicles in September 2000. The plan's goals are a 75-percent reduction in DPM by 2010 and an 85-percent reduction by 2020 from the 2000 baseline. The various pollutants within DPM that also cause acute and chronic health impacts are detailed below in Table A. Table A was developed through crosschecking all diesel emissions pollutants provided in *2010 California Toxic Inventory in Tons per Year,* prepared by CARB, November 2013 to the list of acute and chronic reference exposure levels provided at: http://oehha.ca.gov/air/allrels.html.

Table A – Diesel Emission Pollutants that Cause Acute and Chronic Health Impacts

TAC	Acute (A) or Chronic (C)	Diesel Weight Fraction[1]	Target Organ Systems
Acetaldehyde	A and C	0.0735	Eyes, respiratory system (sensory irritation)
Acrolein	A and C	0.003	Eyes, respiratory system
Arsenic	A and C	0.000002	Reproductive/developmental, cardiovascular system, nervous system
Benzene	A and C	0.02	Hematologic system, immune system, reproductive/developmental
Cadmium	C		kidney, respiratory system
Chlorine	A and C	0.00003	Eyes, respiratory system
Chromium (hexavalent)	C		Respiratory system, hematologic system
Copper	A	0.00006	Respiratory system
Ethyl benzene	C		Liver, kidney, developmental
Formaldehyde	A and C	0.1471	Eyes, immune system, respiratory
Hexane	C		Nervous system
Manganese	C		Nervous system
Mercury	A and C	0.000006	Reproductive/developmental
Methanol	A and C	0.0408	Nervous system, developmental
Methyl Ethyl Ketone	A	0.0148	Eyes, respiratory system
Naphthalene	C		Respiratory system
Nickel	A and C	0.000008	Immune system, respiratory system
Propylene	C		Respiratory System
Selenium	C		Liver, cardiovascular system, nervous system
Styrene	A and C	0.0006	Eyes, respiratory system, reproductive/development
Toluene	A and C	0.0147	Nervous system, eyes, respiratory system, reproduction/developmental
Vanadium	A	0.001	Eyes, respiratory system
Xylene	A and C	0.0104	Eyes, nervous and respiratory systems

Notes:
[1] Diesel related TAC composition is based on the CARB speciation profile 6099 for PM and 818 for VOC.
Sources: CARB, 2013 and OEHHA, 2014.

Diesel engines emit a complex mixture of air pollutants, composed of gaseous and solid material. The visible emissions in diesel exhaust are known as particulate matter or PM, which includes carbon particles or "soot." Diesel exhaust also contains a variety of harmful gases and over 40 other cancer-causing substances. California's identification of DPM as a toxic air contaminant was based on its potential to cause cancer, premature deaths, and other health problems. Exposure to DPM is a health hazard, particularly to children whose lungs are still developing and the elderly who may have other serious health problems. Overall, diesel engine emissions are responsible for the majority of California's potential airborne cancer risk from combustion sources.

Asbestos

Asbestos is listed as a TAC by CARB and as a Hazardous Air Pollutant by the EPA. Asbestos occurs naturally in mineral formations and crushing or breaking these rocks, through construction or other means, can release asbestiform fibers into the air. Asbestos emissions can result from the sale or use of asbestos-containing materials, road surfacing with such materials, grading activities, and surface mining. The risk of disease is dependent upon the intensity and duration of exposure. When inhaled, asbestos fibers may remain in the lungs and with time may be linked to such diseases as asbestosis, lung cancer, and mesothelioma. The nearest likely locations of naturally occurring asbestos, as identified in the *General Location Guide for Ultramafic Rocks in California*, prepared by the California Division of Mines and Geology, is located approximately 70 miles northwest of the project site in Santa Barbara County. Due to the distance to the nearest natural occurrences of asbestos, the project site is not likely to contain asbestos.

2.3 Greenhouse Gases

Constituent gases of the Earth's atmosphere, called atmospheric greenhouse gases (GHGs), play a critical role in the Earth's radiation amount by trapping infrared radiation from the Earth's surface, which otherwise would have escaped to space. Prominent greenhouse gases contributing to this process include carbon dioxide (CO_2), methane (CH_4), ozone (O_3), water vapor, nitrous oxide (N_2O), and chlorofluorocarbons (CFCs). This phenomenon, known as the Greenhouse Effect, is responsible for maintaining a habitable climate. Anthropogenic (caused or produced by humans) emissions of these greenhouse gases in excess of natural ambient concentrations are responsible for the enhancement of the Greenhouse Effect and have led to a trend of unnatural warming of the Earth's natural climate, known as global warming or climate change. Emissions of gases that induce global warming are attributable to human activities associated with industrial/manufacturing, agriculture, utilities, transportation, and residential land uses. Transportation is responsible for 41 percent of the State's greenhouse gas emissions, followed by electricity generation. Emissions of CO_2 and N_2O are byproducts of fossil fuel combustion. Methane, a potent greenhouse gas, results from off-gassing associated with agricultural practices and landfills. Sinks of CO_2, where CO_2 is stored outside of the atmosphere, include uptake by vegetation and dissolution into the ocean. The following provides a description of each of the greenhouse gases and their global warming potential.

Water Vapor

Water vapor is the most abundant, important, and variable GHG in the atmosphere. Water vapor is not considered a pollutant; in the atmosphere it maintains a climate necessary for life. Changes in its concentration are primarily considered a result of climate feedbacks related to the warming of the atmosphere rather than a direct result of industrialization. The feedback loop in which water is involved is critically important to projecting future climate change. As the temperature of the atmosphere rises, more water is evaporated from ground storage (rivers, oceans, reservoirs, soil). Because the air is warmer, the relative humidity can be higher (in essence, the air is able to "hold" more water when it is warmer), leading to more water vapor in the atmosphere. As a GHG, the higher concentration of water vapor is then able to absorb more thermal indirect energy radiated from the Earth, thus further warming the atmosphere. The warmer atmosphere can then hold more water vapor and so on and so on. This is referred to as a "positive

feedback loop." The extent to which this positive feedback loop will continue is unknown as there is also dynamics that put the positive feedback loop in check. As an example, when water vapor increases in the atmosphere, more of it will eventually also condense into clouds, which are more able to reflect incoming solar radiation (thus allowing less energy to reach the Earth's surface and heat it up).

Carbon Dioxide

The natural production and absorption of CO_2 is achieved through the terrestrial biosphere and the ocean. However, humankind has altered the natural carbon cycle by burning coal, oil, natural gas, and wood. Since the industrial revolution began in the mid 1700s, each of these activities has increased in scale and distribution. CO_2 was the first GHG demonstrated to be increasing in atmospheric concentration with the first conclusive measurements being made in the last half of the 20th century. Prior to the industrial revolution, concentrations were fairly stable at 280 parts per million (ppm). The International Panel on Climate Change (IPCC) indicates that concentrations were 379 ppm in 2005, an increase of more than 30 percent. Left unchecked, the IPCC projects that concentration of carbon dioxide in the atmosphere is projected to increase to a minimum of 540 ppm by 2100 as a direct result of anthropogenic sources. This could result in an average global temperature rise of at least two degrees Celsius or 3.6 degrees Fahrenheit.

Methane

CH_4 is an extremely effective absorber of radiation, although its atmospheric concentration is less than that of CO_2. Its lifetime in the atmosphere is brief (10 to 12 years), compared to some other GHGs (such as CO_2, N_2O, and Chlorofluorocarbons (CFCs)). CH_4 has both natural and anthropogenic sources. It is released as part of the biological processes in low oxygen environments, such as in swamplands or in rice production (at the roots of the plants). Over the last 50 years, human activities such as growing rice, raising cattle, using natural gas, and mining coal have added to the atmospheric concentration of methane. Other anthropocentric sources include fossil-fuel combustion and biomass burning.

Nitrous Oxide

Concentrations of N_2O also began to rise at the beginning of the industrial revolution. In 1998, the global concentration of this GHG was documented at 314 parts per billion (ppb). N_2O is produced by microbial processes in soil and water, including those reactions which occur in fertilizer containing nitrogen. In addition to agricultural sources, some industrial processes (fossil fuel-fired power plants, nylon production, nitric acid production, and vehicle emissions) also contribute to its atmospheric load. N_2O is also commonly used as an aerosol spray propellant (i.e., in whipped cream bottles, in potato chip bags to keep chips fresh, and in rocket engines and race cars).

Chlorofluorocarbons

CFCs are gases formed synthetically by replacing all hydrogen atoms in methane or ethane (C_2H_6) with chlorine and/or fluorine atoms. CFCs are nontoxic, nonflammable, insoluble, and chemically unreactive in the troposphere (the level of air at the Earth's surface). CFCs have no natural source, but were first synthesized in 1928. They were used for refrigerants, aerosol propellants, and cleaning solvents. Due to the discovery that they are able to destroy stratospheric ozone, a global effort to halt their production was undertaken and in 1989 the European Community agreed to ban CFCs by 2000 and subsequent treaties banned CFCs worldwide by 2010. This effort was extremely successful, and the levels of the major CFCs are now remaining level or declining. However, their long atmospheric lifetimes mean that some of the CFCs will remain in the atmosphere for over 100 years.

Hydrofluorocarbons

HFCs are synthetic man-made chemicals that are used as a substitute for CFCs. Out of all the GHGs, they are one of three groups with the highest global warming potential. The HFCs with the largest measured

atmospheric abundances are (in order), HFC-23 (CHF_3), HFC-134a (CF_3CH_2F), and HFC-152a (CH_3CHF_2). Prior to 1990, the only significant emissions were HFC-23. HFC-134a use is increasing due to its use as a refrigerant. Concentrations of HFC-23 and HFC-134a in the atmosphere are now about 10 parts per trillion (ppt) each. Concentrations of HFC-152a are about 1 ppt. HFCs are manmade for applications such as automobile air conditioners and refrigerants.

Perfluorocarbons

Perfluorocarbons (PFCs) have stable molecular structures and do not break down through the chemical processes in the lower atmosphere. High-energy ultraviolet rays about 60 kilometers above Earth's surface are able to destroy the compounds. Because of this, PFCs have very long lifetimes, between 10,000 and 50,000 years. Two common PFCs are tetrafluoromethane (CF_4) and hexafluoroethane (C_2F_6). Concentrations of CF_4 in the atmosphere are over 70 ppt. The two main sources of PFCs are primary aluminum production and semiconductor manufacturing.

Sulfur Hexafluoride

Sulfur Hexafluoride (SF_6) is an inorganic, odorless, colorless, nontoxic, nonflammable gas. SF_6 has the highest global warming potential of any gas evaluated; 23,900 times that of CO_2. Concentrations in the 1990s were about 4 ppt. Sulfur hexafluoride is used for insulation in electric power transmission and distribution equipment, in the magnesium industry, in semiconductor manufacturing, and as a tracer gas for leak detection.

Aerosols

Aerosols are particles emitted into the air through burning biomass (plant material) and fossil fuels. Aerosols can warm the atmosphere by absorbing and emitting heat and can cool the atmosphere by reflecting light. Cloud formation can also be affected by aerosols. Sulfate aerosols are emitted when fuel containing sulfur is burned. Black carbon (or soot) is emitted during biomass burning due to the incomplete combustion of fossil fuels. Particulate matter regulation has been lowering aerosol concentrations in the United States; however, global concentrations are likely increasing.

2.4 Global Warming Potential

GHGs have varying global warming potential (GWP). The GWP is the potential of a gas or aerosol to trap heat in the atmosphere; it is the cumulative radiative forcing effects of a gas over a specified time horizon resulting from the emission of a unit mass of gas relative to the reference gas, CO_2. The GHGs listed by the IPCC and the CEQA Guidelines are discussed in this section in order of abundance in the atmosphere. Water vapor, the most abundant GHG, is not included in this list because its natural concentrations and fluctuations far outweigh its anthropogenic (human-made) sources. To simplify reporting and analysis, GHGs are commonly defined in terms of their GWP. The IPCCC defines the GWP of various GHG emissions on a normalized scale that recasts all GHG emissions in terms of CO_2e. The GWP of CO_2 is by definition, 1. The GWP values used in this analysis are based on the IPCC Second Assessment Report (SAR) and United Nations Framework Convention on Climate Change (UNFCCC) reporting guidelines, and are detailed on the following page in Table B. The SAR GWPs are used in CARB's California inventory and AB32 Scoping Plan estimates.

Table B – Global Warming Potentials, Atmospheric Lifetimes and Abundances of GHGs

Gas	Atmospheric Lifetime (years)[1]	Global Warming Potential (100 Year Horizon)[2]	Atmospheric Abundance
Carbon Dioxide (CO_2)	50-200	1	379 ppm
Methane (CH_4)	9-15	21	1,774 ppb
Nitrous Oxide (N_2O)	120	310	319 ppb
HFC-23	264	11,700	18 ppt
HFC-134a	14.6	1,300	35 ppt
HFC-152a	1.5	140	3.9 ppt
PFC: Tetrafluoromethane (CF_4)	50,000	6,500	74 ppt
PFC: Hexafluoroethane (C_2F_6)	10,000	9,200	2.9 ppt
Sulfur Hexafluoride (SF_6)	3,200	23,900	5.6 ppt

Notes:
[1] Defined as the half-life of the gas.
[2] Compared to the same quantity of CO_2 emissions.
Definitions: ppm = parts per million; ppb = parts per billion; ppt = parts per trillion
Source: IPCC, 2007.

3.0 AIR QUALITY MANAGEMENT

3.1 Regulatory Setting

The air quality at the project site is addressed through the efforts of various international, federal, state, regional, and local government agencies. These agencies work jointly, as well as individually, to improve air quality through legislation, regulations, planning, policy-making, education, and a variety of programs. The agencies responsible for improving the air quality are discussed below.

International

In 1988, the United Nations established the Intergovernmental Panel on Climate Change (IPCC) to evaluate the impacts of global climate change and to develop strategies that nations could implement to curtail global climate change. In 1992, the United States joined other countries around the world in signing the United Nations' Framework Convention on Climate Change (UNFCCC) agreement with the goal of controlling GHG emissions. The parties of the UNFCCC adopted the Kyoto Protocol, which set binding GHG reduction targets for 37 industrialized countries, the objective of reducing their collective GHG emissions by five percent below 1990 levels by 2012. The Kyoto Protocol has been ratified by 182 countries, but has not been ratified by the United States. It should be noted that Japan and Canada opted out of the Kyoto Protocol and the remaining developed countries that ratified the Kyoto Protocol have not met their Kyoto targets. The Kyoto Protocol expired in 2012 and the amendment for the second commitment period from 2013 to 2020 has not yet entered into legal force.

Additionally, the Montreal Protocol was originally signed in 1987 and substantially amended in 1990 and 1992. The Montreal Protocol stipulates that the production and consumption of compounds that deplete ozone in the stratosphere—CFCs, halons, carbon tetrachloride, and methyl chloroform—were to be phased out, with the first three by the year 2000 and methyl chloroform by 2005.

Federal – United States Environmental Protection Agency

The United States Environmental Protection Agency (EPA) is responsible for setting and enforcing the National Ambient Air Quality Standards (NAAQS) for atmospheric pollutants. It regulates emission sources that are under the exclusive authority of the federal government, such as aircraft, ships, and certain locomotives. NAAQS pollutants were identified using medical evidence and are shown on the following page in Table C.

As part of its enforcement responsibilities, the EPA requires each state with federal nonattainment areas to prepare and submit a State Implementation Plan (SIP) that demonstrates the means to attain the national standards. The SIP must integrate federal, state, and local components and regulations to identify specific measures to reduce pollution, using a combination of performance standards and market-based programs within the timeframe identified in the SIP.

On December 14, 2012, the EPA revised the primary annual PM2.5 NAAQS from 15 $\mu g/m^3$ to 12 $\mu g/m^3$ and retained the 24 hour PM2.5 standard at 35 $\mu g/m^3$ in order to provide increased protection for children, older adults, persons with pre-existing heart and lung disease and other at risk populations.

Table C – State and Federal Criteria Pollutant Standards

Air Pollutant	Concentration / Averaging Time		Most Relevant Effects
	California Standards	Federal Primary Standards	
Ozone (O_3)	0.09 ppm / 1-hour 0.07 ppm / 8-hour	0.075 ppm, / 8-hour	(a) Pulmonary function decrements and localized lung edema in humans and animals; (b) Risk to public health implied by alterations in pulmonary morphology and host defense in animals; (c) Increased mortality risk; (d) Risk to public health implied by altered connective tissue metabolism and altered pulmonary morphology in animals after long-term exposures and pulmonary function decrements in chronically exposed humans; (e) Vegetation damage; and (f) Property damage.
Carbon Monoxide (CO)	20.0 ppm / 1-hour 9.0 ppm / 8-hour	35.0 ppm / 1-hour 9.0 ppm / 8-hour	(a) Aggravation of angina pectoris and other aspects of coronary heart disease; (b) Decreased exercise tolerance in persons with peripheral vascular disease and lung disease; (c) Impairment of central nervous system functions; and (d) Possible increased risk to fetuses.
Nitrogen Dioxide (NO_2)	0.18 ppm / 1-hour 0.030 ppm / annual	100 ppb / 1-hour 0.053 ppm / annual	(a) Potential to aggravate chronic respiratory disease and respiratory symptoms in sensitive groups; (b) Risk to public health implied by pulmonary and extra-pulmonary biochemical and cellular changes and pulmonary structural changes; and (c) Contribution to atmospheric discoloration.
Sulfur Dioxide (SO_2)	0.25 ppm / 1-hour 0.04 ppm / 24-hour	75 ppb / 1-hour 0.14 ppm/annual	(a) Bronchoconstriction accompanied by symptoms which may include wheezing, shortness of breath and chest tightness, during exercise or physical activity in persons with asthma.
Suspended Particulate Matter (PM_{10})	50 µg/m^3 / 24-hour 20 µg/m^3 / annual	150 µg/m^3 / 24-hour	(a) Exacerbation of symptoms in sensitive patients with respiratory or cardiovascular disease; (b) Declines in pulmonary function growth in children; and (c) Increased risk of premature death from heart or lung diseases in elderly.
Fine Suspended Particulate Matter ($PM_{2.5}$)	12 µg/m^3 / annual	35 µg/m^3 / 24-hour 12 µg/m^3 / annual	
Sulfates	25 µg/m^3 / 24-hour	No Federal Standards	(a) Decrease in ventilatory function; (b) Aggravation of asthmatic symptoms; (c) Aggravation of cardio-pulmonary disease; (d) Vegetation damage; (e) Degradation of visibility; and (f) Property damage.
Lead	1.5 µg/m^3 / 30-day	0.15 µg/m^3 /3-month rolling	(a) Learning disabilities; and (b) Impairment of blood formation and nerve conduction.
Visibility Reducing Particles	Extinction coefficient of 0.23 per kilometer - visibility of ten miles or more due to particles when relative humidity is less than 70 percent.	No Federal Standards	Visibility impairment on days when relative humidity is less than 70 percent.

Source: http://www.arb.ca.gov/research/aaqs/aaqs2.pdf .

As indicated on the following page in Table D, the South Coast Air Basin has been designated by EPA for the national standards as a non-attainment area for ozone (O_3) and fine particulate matter (PM2.5) and partial non-attainment for lead. Currently, the South Coast Air Basin is in attainment with the national

ambient air quality standards for carbon monoxide (CO), sulfur dioxide (SO_2), nitrogen dioxide (NO_2), and respirable particulate matter (PM10).

Table D – South Coast Air Basin Attainment Status

Pollutant	Averaging Time	National Standards Attainment Date[1]	California Standards[2]
1979 1-Hour Ozone (O_3)[3] 1997 8-Hour Ozone (O_3)[4] 2008 8-Hour Ozone (O_3)	1-Hour (0.12 ppm) 8-Hour (0.08 ppm) 8-Hour (0.075 ppm)	Nonattainment (Extreme) 11/15/2010 (not attained) Nonattainment (Extreme) 6/15/2024 Nonattainment (Extreme) 12/31/2032	Nonattainment
Carbon Monoxide (CO)	1-Hour (35 ppm) 8-Hour (9 ppm)	Attainment (Maintenance) 6/11/2007 (attained)	Maintenance
Nitrogen Dioxide (NO_2)[5]	1-Hour (100 ppb) Annual (0.053 ppm)	Unclassifiable/Attainment Attained Attainment (Maintenance) 9/22/1998	Attainment
Sulfur Dioxide (SO_2)[6]	1-Hour (75 ppb) 24-Hour (0.14 ppm) Annual (0.03 ppm)	Designation Pending /Pending Unclassifiable/Attainment 3/19/1979 (attained)	Attainment
PM10	24-Hour (150 µg/m^3)	Attainment (Maintenance) July 26, 2013	Nonattainment
PM2.5	24-Hour (35 µg/m^3) Annual (12.0 µg/m^3)	Nonattainment 12/14/2014 Nonattainment 4/5/2015	Nonattainment
Lead (Pb)	3-Months Rolling (0.15 µg/m^3)	Nonattainment (Partial)[7] 12/31/2015	Attainment

[1] Obtained from Final 2012 AQMP, SCAQMD, 2012. A design value below the NAAQS for data through the full year or smog season prior to the attainment date is typically required for attainment demonstration.
[2] Obtained from http://www.arb.ca.gov/desig/adm/adm.htm.
[3] 1-hour O_3 standard (0.12 ppm) was revoked, effective June 15, 2005; however, the South Coast Air Basin has not attained this standard based on 2008-2010 data has some continuing obligations under the former standard.
[4] 1997 8-hour O_3 standard (0.08 ppm) was reduced (0.075 ppm), effective May 27, 2008; the 1997 O_3 standard and most related implementation rules remain in place until the 1997 standard is revoked by U.S. EPA.
[5] New NO_2 1-hour standard, effective August 2, 2010; attainment designations January 20, 2012; annual NO_2 standard retained.
[6] The 1971 annual and 24-hour SO_2 standards were revoked, effective August 23, 2010; however, these 1971 standards will remain in effect until one year after U.S. EPA promulgates area designations for the 2010 SO_2 1-hour standard. Area designations are expected in 2012, with the South Coast Air Basin designated Unclassifiable/Attainment
[7] Partial Nonattainment designation – Los Angeles County portion of the South Coast Air Basin only.

In 2011, the South Coast Air Basin exceeded federal standards for either ozone or PM2.5 at one or more locations on a total of 124 days, based on the current federal standards for 8-hour ozone and 24-hour PM2.5. Despite substantial improvements in air quality over the past few decades, some air monitoring stations in the South Coast Air Basin still exceed the NAAQS for ozone more frequently than any other stations in the U.S. In 2011, three of the top five stations that exceeded the 8-hour ozone NAAQS were located in the South Coast Air Basin (Central San Bernardino Mountains, East San Bernardino Valley, and Metropolitan Riverside County).

PM2.5 in the South Coast Air Basin has improved significantly in recent years, with 2010 and 2011 being the cleanest years on record. In 2011, only one station in the South Coast Air Basin (Metropolitan Riverside

County at Mira Loma) exceeded the annual PM2.5 NAAQS and the 98th percentile form of the 24-hour PM2.5 NAAQS, as well as the 3-year design values for these standards. South Coast Air Basin-wide, the federal PM2.5 24-hour standard level was exceeded in 2011 on 17 sampling days.

The South Coast Air Basin is currently in attainment for the federal standards for SO_2, CO, and NO_2. While the concentration level of the new 1-hour NO_2 federal standard (100 ppb) was exceeded in the South Coast Air Basin at two stations (Central Los Angeles and Long Beach) on the same day in 2011, the NAAQS NO_2 design value has not been exceeded. Therefore, the South Coast Air Basin remains in attainment of the NO_2 NAAQS.

The EPA designated the Los Angeles County portion of the South Coast Air Basin as nonattainment for the recently revised (2008) federal lead standard (0.15 $\mu g/m^3$, rolling 3-month average), due to the addition of source-specific monitoring under the new federal regulation. This designation was based on two source-specific monitors in Vernon and the City of Industry exceeding the new standard in the 2007-2009 period of data used. For the most recent 2009-2011 data period, only one of these stations (Vernon) still exceeded the lead standard. The *2012 Lead State Implementation Plan Los Angeles County*, prepared by SCAQMD and adopted on May 4, 2012, provides measures to meet attainment of lead by December 31, 2015.

In Massachusetts v. Environmental Protection Agency (Docket No. 05–1120), argued November 29, 2006 and decided April 2, 2007, the U.S. Supreme Court held that not only did the EPA have authority to regulate greenhouse gases, but the EPA's reasons for not regulating this area did not fit the statutory requirements. As such, the U.S. Supreme Court ruled that the EPA should be required to regulate CO2 and other greenhouse gases as pollutants under the federal Clean Air Act (CAA).

In response to the FY2008 Consolidations Appropriations Act (H.R. 2764; Public Law 110-161), EPA proposed a rule on March 10, 2009 that requires mandatory reporting of GHG emissions from large sources in the United States. On September 22, 2009, the Final Mandatory Reporting of GHG Rule was signed and published in the Federal Register on October 30, 2009. The rule became effective on December 29, 2009. This rule requires suppliers of fossil fuels or industrial GHGs, manufacturers of vehicles and engines, and facilities that emit 25,000 metric tons or more per year of GHG emissions to submit annual reports to EPA.

On December 7, 2009, the EPA Administrator signed two distinct findings under section 202(a) of the Clean Air Act. One is an endangerment finding that finds concentrations of the six GHGs in the atmosphere threaten the public health and welfare of current and future generations. The other is a cause or contribute finding, that finds emissions from new motor vehicles and new motor vehicle engines contribute to the GHG pollution which threatens public health and welfare. These actions will not themselves impose any requirements on industry or other entities. However, it is a prerequisite to finalizing the EPA's proposed GHG emission standards for light-duty vehicles, which were jointly proposed by the EPA and Department of Transportation on September 15, 2009.

The EPA has recently proposed several standards to reduce GHG emissions from power plants and other stationary sources. On September 13, 2013 the EPA Administrator signed 40 CFR Part 60, that limits emissions from new sources to 1,100 pounds of CO_2 per MWh for fossil fuel-fired utility boilers and 1,000 pounds of CO_2 per MWh for large natural gas-fired combustion units. These new standards make it impossible to construct new coal powered plants based on current available technology.

State – California Air Resources Board

The California Air Resources Board (CARB), which is a part of the California Environmental Protection Agency, is responsible for the coordination and administration of both federal and state air pollution control programs within California. In this capacity, the CARB conducts research, sets the California Ambient Air

Quality Standards (CAAQS), compiles emission inventories, develops suggested control measures, provides oversight of local programs, and prepares the SIP. The CAAQS for criteria pollutants are shown above in Table C. In addition, the CARB establishes emission standards for motor vehicles sold in California, consumer products (e.g. hairspray, aerosol paints, and barbeque lighter fluid), and various types of commercial equipment. It also sets fuel specifications to further reduce vehicular emissions.

The South Coast Air Basin has been designated by the CARB as a non-attainment area for ozone, PM10, and PM2.5. Currently, the South Coast Air Basin is in attainment with the ambient air quality standards for CO, NO_2, SO_2, lead, and sulfates and is unclassified for visibility reducing particles and Hydrogen Sulfide.

On December 12, 2008 the CARB adopted Resolution 08-43, which limits NOx, PM10 and PM2.5 emissions from on-road diesel truck fleets that operate in California. On October 12, 2009 Executive Order R-09-010 was adopted that codified Resolution 08-43 into Section 2025, title 13 of the California Code of Regulations. This regulation requires that by the year 2023 all commercial diesel trucks that operate in California shall meet model year 2010 (Tier 4 Final) or latter emission standards. In the interim period, this regulation provides annual interim targets for fleet owners to meet. This regulation also provides a few exemptions including a onetime per year 3-day pass for trucks registered outside of California.

CARB is also responsible for regulations pertaining to Toxic Air Contaminants (TACs). The Air Toxics "Hot Spots" Information and Assessment Act (Assembly Bill [AB] 2588, 1987, Connelly) was enacted in 1987 as a means to establish a formal air toxics emission inventory risk quantification program. AB 2588, as amended, establishes a process that requires stationary sources to report the type and quantities of certain substances their facilities routinely release in California. The data is ranked by high, intermediate, and low categories, which are determined by: the potency, toxicity, quantity, volume, and proximity of the facility to nearby receptors.

CARB also proposed interim statewide CEQA thresholds for GHG emissions and released *Recommended Approaches for Setting Interim Significance Thresholds for Greenhouse Gases under the California Environmental Quality Act,* on October 24, 2008. The State currently has no regulations that establish ambient air quality standards for GHGs. However, the State has passed laws directing CARB to develop actions to reduce GHG emissions, which are listed below.

<u>Assembly Bill 1493</u>

California Assembly Bill 1493 (also known as the Pavley Bill, in reference to its author Fran Pavley) was enacted on July 22, 2002 and required CARB to develop and adopt regulations that reduce GHGs emitted by passenger vehicles and light duty trucks. In 2004, CARB approved the "Pavley I" regulations limiting the amount of GHGs that may be released from new passenger automobiles that are being phased in between model years 2009 through 2016. These regulation will reduce GHG emissions by 30 percent from 2002 levels by 2016. The second set of regulations "Pavley II" is currently in development and will be phased in between model years 2017 through 2025 and will reduce emissions by 45 percent by the year 2020. The Pavley II standards are being developed by linking the GHG emissions and formerly separate toxic tailpipe emissions standards previously known as the "LEV III" (third stage of the Low Emission Vehicle standards) into a single regulatory framework.

In 2005, the CARB submitted a "waiver" request to the EPA in order to implement the GHG standards and in March of 2008, the U.S. EPA denied the request. However, in June 2009, the decision was reversed and the U.S. EPA granted California the authority to implement the GHG standards for passenger cars, pickup trucks and sport utility vehicles. In September 2009, the Pavley I regulations were adopted by CARB.

Executive Order S-3-05

The California Governor issued Executive Order S 3-05, GHG Emission, in June 2005, which established the following reduction targets:

- 2010: Reduce greenhouse gas emissions to 2000 levels;
- 2020: Reduce greenhouse gas emissions to 1990 levels;
- 2050: Reduce greenhouse gas emissions to 80 percent below 1990 levels.

The executive order directed the secretary of the California Environmental Protection Agency (CalEPA) to coordinate a multi-agency effort to reduce GHG emissions to the target levels. To comply with the Executive Order, the secretary of CalEPA created the California Climate Action Team (CAT), made up of members from various state agencies and commissions. The team released its first report in March 2006. The report proposed to achieve the targets by building on the voluntary actions of businesses, local governments, and communities and through State incentive and regulatory programs.

Assembly Bill 32

In 2006, the California State Legislature adopted Assembly Bill 32 (AB 32), the California Global Warming Solutions Act of 2006. AB 32 requires CARB, to adopt rules and regulations that would achieve GHG emissions equivalent to statewide levels in 1990 by 2020 through an enforceable statewide emission cap which will be phased in starting in 2012. Emission reductions shall include carbon sequestration projects that would remove carbon from the atmosphere and utilize best management practices that are technologically feasible and cost effective.

On December 6, 2007 CARB released the calculated Year 1990 GHG emissions of 427 million metric tons of CO2e ($MMTCO_2e$). The 2020 target of 427 $MMTCO_2e$ requires the reduction of 169 $MMTCO_2e$, or approximately 30 percent from the State's projected 2020 business as usual emissions of 596 $MMTCO_2e$ and the reduction of 42 $MMTCO_2e$, or almost 10 percent from the 2002-2004 average GHG emissions. Under AB 32, CARB was required to adopt regulations by January 1, 2011 to achieve reductions in GHGs to meet the 1990 cap by 2020. Early measures CARB took to lower GHG emissions included requiring operators of the largest industrial facilities that emit 25,000 metric tons of CO2 in a calendar year to submit verification of GHG emissions by December 1, 2010. The CARB Board also approved nine discrete early action measures that include regulations affecting landfills, motor vehicle fuels, refrigerants in cars, port operations and other sources, all of which became enforceable on or before January 1, 2010.

On December 11, 2008 the CARB Board approved a Scoping Plan, with final adoption May 11, 2009 that proposed a variety of measures including direct regulations, alternative compliance mechanisms, monetary and non-monetary incentives, voluntary actions, a market-based cap-and-trade system, and a fee regulation to fund the program. In current pending litigation, Association of Irritated Residents v. California Air Resources Board, a California State trial court found that the analysis of the alternatives identified in the AB 32 Scoping Plan Functional Equivalent Document was not sufficient for informed decision-making and public review under CEQA. In response, CARB has appealed the decision. In addition, CARB prepared the *Supplement to the AB 32 Scoping Plan Functional Equivalent Document,* June 13, 2011. On August 24, 2011 CARB recertified the complete AB 32 Scoping Plan Functional Equivalent Environmental Document revised by the Final Supplement. In December, 2011 the Final Supplement was accepted as sufficient to fulfill the trial court's order.

Senate Bill 1368

Senate Bill 1368 (SB 1368) is the companion Bill of AB 32 and was adopted September 2006. SB 1368 requires that the California Public Utilities Commission (CPUC) establish a performance standard for

baseload generation of GHG emissions by investor-owned utilities by February 1, 2007 and for local publicly owned utilities by June 30, 2007. These standards could not exceed the GHG emissions rate from a baseload combined-cycle, natural gas-fired plant. Furthermore, the legislation states that all electricity provided to the State, including imported electricity, must be generated by plants that meet the standards set by CPUC and California Energy Commission (CEC).

Executive Order S-1-07

Executive Order S-1-07 was issued in 2007 and proclaims that the transportation sector is the main source of GHG emissions in the State, since it generates more than 40 percent of the State's GHG emissions. It establishes a goal to reduce the carbon intensity of transportation fuels sold in the State by at least ten percent by 2020. This Order also directs CARB to determine whether this Low Carbon Fuel Standard (LCFS) could be adopted as a discrete early-action measure as part of the effort to meet the mandates in AB 32.

On April 23, 2009 CARB approved the proposed regulation to implement the low carbon fuel standard. The low carbon fuel standard is anticipated to reduce GHG emissions by about 16 MMT per year by 2020. The low carbon fuel standard is designed to provide a framework that uses market mechanisms to spur the steady introduction of lower carbon fuels. The framework establishes performance standards that fuel producers and importers must meet annually beginning in 2011. Separate standards are established for gasoline and diesel fuels and the alternative fuels that can replace each. The standards are "back-loaded", with more reductions required in the last five years, than during the first five years. This schedule allows for the development of advanced fuels that are lower in carbon than today's fuels and the market penetration of plug-in hybrid electric vehicles, battery electric vehicles, fuel cell vehicles, and flexible fuel vehicles. It is anticipated that compliance with the low carbon fuel standard will be based on a combination of both lower carbon fuels and more efficient vehicles.

Reformulated gasoline mixed with corn-derived ethanol at ten percent by volume and low sulfur diesel fuel represent the baseline fuels. Lower carbon fuels may be ethanol, biodiesel, renewable diesel, or blends of these fuels with gasoline or diesel as appropriate. Compressed natural gas and liquefied natural gas also may be low carbon fuels. Hydrogen and electricity, when used in fuel cells or electric vehicles are also considered as low carbon fuels for the low carbon fuel standard.

Senate Bill 97

Senate Bill 97 (SB 97) was adopted August 2007 and acknowledges that climate change is a prominent environmental issue that requires analysis under CEQA. SB 97 directed the Governor's Office of Planning and Research (OPR), which is part of the State Natural Resources Agency, to prepare, develop, and transmit to CARB guidelines for the feasible mitigation of GHG emissions or the effects of GHG emissions, as required by CEQA, by July 1, 2009. The Natural Resources Agency was required to certify and adopt those guidelines by January 1, 2010.

Pursuant to the requirements of SB 97 as stated above, on December 30, 2009 the Natural Resources Agency adopted amendments to the State CEQA guidelines that address GHG emissions. The CEQA Guidelines Amendments changed 14 sections of the CEQA Guidelines and incorporated GHG language throughout the Guidelines. However, no GHG emissions thresholds of significance were provided and no specific mitigation measures were identified. The GHG emission reduction amendments went into effect on March 18, 2010 and are summarized below:

- Climate action plans and other greenhouse gas reduction plans can be used to determine whether a project has significant impacts, based upon its compliance with the plan.

- Local governments are encouraged to quantify the greenhouse gas emissions of proposed projects, noting that they have the freedom to select the models and methodologies that best meet their needs and circumstances. The section also recommends consideration of several qualitative factors that may be used in the determination of significance, such as the extent to which the given project complies with state, regional, or local GHG reduction plans and policies. OPR does not set or dictate specific thresholds of significance. Consistent with existing CEQA Guidelines, OPR encourages local governments to develop and publish their own thresholds of significance for GHG impacts assessment.
- When creating their own thresholds of significance, local governments may consider the thresholds of significance adopted or recommended by other public agencies, or recommended by experts.
- New amendments include guidelines for determining methods to mitigate the effects of greenhouse gas emissions in Appendix F of the CEQA Guidelines.
- OPR is clear to state that "to qualify as mitigation, specific measures from an existing plan must be identified and incorporated into the project; general compliance with a plan, by itself, is not mitigation."
- OPR's emphasizes the advantages of analyzing GHG impacts on an institutional, programmatic level. OPR therefore approves tiering of environmental analyses and highlights some benefits of such an approach.
- Environmental impact reports (EIRs) must specifically consider a project's energy use and energy efficiency potential.

Senate Bills 1078, 107, and X1-2 and Executive Orders S-14-08 and S-21-09

Senate Bill 1078 (SB 1078) requires retail sellers of electricity, including investor-owned utilities and community choice aggregators, to provide at least 20 percent of their supply from renewable sources by 2017. Senate Bill 107 (SB 107) changed the target date to 2010. Executive Order S-14-08 was signed on November 2008 and expands the State's Renewable Energy Standard to 33 percent renewable energy by 2020. Executive Order S-21-09 directed CARB to adopt regulations by July 31, 2010 to enforce S-14-08. Senate Bill X1-2 codifies the 33 percent renewable energy requirement by 2020.

Senate Bill 375

Senate Bill 375 (SB 375) was adopted September 2008 and aligns regional transportation planning efforts, regional GHG emission reduction targets, and land use and housing allocation. SB 375 requires Metropolitan Planning Organizations (MPO) to adopt a sustainable communities strategy (SCS) or alternate planning strategy (APS) that will prescribe land use allocation in that MPOs Regional Transportation Plan (RTP). CARB, in consultation with each MPO, will provide each affected region with reduction targets for GHGs emitted by passenger cars and light trucks in the region for the years 2020 and 2035. These reduction targets will be updated every eight years but can be updated every four years if advancements in emissions technologies affect the reduction strategies to achieve the targets. CARB is also charged with reviewing each MPO's sustainable communities strategy or alternate planning strategy for consistency with its assigned targets.

City and County land use policies, including General Plans, are not required to be consistent with the RTP and associated SCS or APS. However, new provisions of CEQA would incentivize, through streamlining and other provisions, qualified projects that are consistent with an approved SCS or APS and categorized as "transit priority projects."

Senate Bills 939 and 1374

Senate Bill 939 (SB 939) requires that each jurisdiction in California to divert at least 50 percent of its waste away from landfills, whether through waste reduction, recycling or other means. Senate Bill 1374 (SB 1374) requires the California Integrated Waste Management Board to adopt a model ordinance by March 1, 2004 suitable for adoption by any local agency to require 50 to 75 percent diversion of construction and demolition of waste materials from landfills.

California Code of Regulations (CCR) Title 24, Part 11

CCR Title 24, Part 11: *California Green Building Standards* (Title 24) became effective in 2001 in response to continued efforts to reduce GHG emissions associated with energy consumption. CCR Title 24, Part 11 now require that new buildings reduce water consumption, employ building commissioning to increase building system efficiencies, divert construction waste from landfills, and install low pollutant-emitting finish materials. One focus of CCR Title 24, Part 11 is water conservation measures, which reduce GHG emissions by reducing electrical consumption associated with pumping and treating water. CCR Title 24, Part 11 has approximately 52 nonresidential mandatory measures and an additional 130 provisions for optional use. Some key mandatory measures for commercial occupancies include specified parking for clean air vehicles, a 20 percent reduction of potable water use within buildings through use of low-flow fixtures, a 50 percent construction waste diversion from landfills, and use of building finish materials that emit low levels of volatile organic compounds.

Regional

The SCAQMD is the agency principally responsible for comprehensive air pollution control in the South Coast Air Basin. To that end, as a regional agency, the SCAQMD works directly with the Southern California Association of Governments (SCAG), county transportation commissions, and local governments and cooperates actively with all federal and state agencies.

South Coast Air Quality Management District

SCAQMD develops rules and regulations, establishes permitting requirements for stationary sources, inspects emission sources, and enforces such measures through educational programs or fines, when necessary. SCAQMD is directly responsible for reducing emissions from stationary, mobile, and indirect sources. It has responded to this requirement by preparing a sequence of AQMPs. The *Final 2012 Air Quality Management Plan* (2012 AQMP) was adopted by the SCAQMD Board on December 7, 2012 and was adopted by CARB via Resolution 13-3 on January 25, 2013. The 2012 AQMP was prepared in order to meet the federal Clean Air Act requirement that all 24-hour PM2.5 non-attainment areas prepare a SIP, that were required to be submitted to the U.S. EPA by December 14, 2012 and demonstrate attainment with the 24-hour PM2.5 standard by 2014. The 2012 AQMP demonstrates attainment of the federal 24-hour PM2.5 standard by 2014 in the South Coast Air Basin through adoption of all feasible measures, and therefore, no extension of the attainment date is needed.

The 2007 AQMP demonstrated attainment with the 1997 8-hour ozone (80 ppb) standard by 2023, through implementation of future improvements in control techniques and technologies. These "black box" emissions reductions represent 65 percent of the remaining NOx emission reductions by 2023 in order to show attainment with the 1997 8-hour ozone NAAQS. Given the magnitude of these needed emissions reductions, additional NOx control measures have been provided in this AQMP even though the primary purpose of this AQMP is to show compliance with 24-hour PM2.5 emissions standards.

The 2012 AQMP is designed to satisfy the California Clean Air Act's (CCAA) emission reductions of 5 percent per year or adoption of all feasible measures requirements and fulfill the EPA's requirement to update transportation conformity emissions budgets based on the latest approved motor vehicle emissions

model and planning assumptions. The 2012 AQMP updates and revises the previous 2007 AQMP. The 2012 AQMP was prepared to comply with the Federal and State CCAA and amendments, to accommodate growth, to reduce the high pollutant levels in the South Coast Air Basin, to meet Federal and State ambient air quality standards, and to minimize the fiscal impact that pollution control measures have on the local economy. The purpose of the 2012 AQMP for the South Coast Air Basin is to set forth a comprehensive program that will lead this area into compliance with all federal and state air-quality planning requirements.

The 2012 AQMP builds upon the approaches taken in the 2007 AQMP for the attainment of federal PM and ozone standards, and highlights the significant amount of reductions needed and the need to engage in interagency coordinated planning of mobile sources to meet all of the federal criteria pollutant standards. Compared with the 2007 AQMP, the 2012 AQMP utilizes revised emissions inventory projections that use 2008 as the base year. On-road emissions are calculated using CARB EMFAC2011 emission factors and the transportation activity data provided by SCAG from their 2012 Regional Transportation Plan (2012 RTP). Off-road emissions were updated using CARB's 2011 In-Use Off-Road Fleet Inventory Model. Since the 2007 AQMP was finalized new area source categories such as LPG transmission losses, storage tank and pipeline cleaning and degassing, and architectural colorants, were created and included in the emissions inventories. Composting waste was revised and now includes the emissions from green waste composting covered under SCAQMD Rule 1133.3. The 2012 AQMP also includes analysis of several additional sources of GHG emissions such as landfills and could also assist in reaching the GHG target goals in the AB32 Scoping Plan.

The control measures in the 2012 AQMP consist of three components: 1) South Coast Air Basin-wide and episodic short-term PM2.5 measures; 2) Section 182(e)(5) implementation measures; and 3) Transportation control measures. Many of the control measures are not based on command and control regulations, but instead focus on incentives, outreach, and education to bring about emissions reductions through voluntary participation and behavioral changes. More broadly, a transition to zero- and near-zero emission technologies is necessary to meet 2023 and 2032 air quality standards and 2050 climate goals. Many of the same technologies will address both air quality and climate needs.

Although SCAQMD is responsible for regional air quality planning efforts, it does not have the authority to directly regulate air quality issues associated with plans and new development projects throughout the South Coast Air Basin. Instead, this is controlled through local jurisdictions in accordance to the California Environmental Quality Act (CEQA). In order to assist local jurisdictions with air quality compliance issues the *CEQA Air Quality Handbook* (SCAQMD CEQA Handbook), prepared by SCAQMD, 1993, with the most current updates found at http://www.aqmd.gov/ceqa/hdbk.html, was developed in accordance with the projections and programs of the AQMP. The purpose of the SCAQMD CEQA Handbook is to assist Lead Agencies, as well as consultants, project proponents, and other interested parties in evaluating a proposed project's potential air quality impacts. Specifically, the SCAQMD CEQA Handbook explains the procedures that SCAQMD recommends be followed for the environmental review process required by CEQA. The SCAQMD CEQA Handbook provides direction on how to evaluate potential air quality impacts, how to determine whether these impacts are significant, and how to mitigate these impacts. The SCAQMD intends that by providing this guidance, the air quality impacts of plans and development proposals will be analyzed accurately and consistently throughout the South Coast Air Basin, and adverse impacts will be minimized.

In order to assist local agencies with direction on GHG emissions, the SCAQMD organized a working group and adopted Rules 2700, 2701, 2702, and 3002 which are described below.

SCAQMD Working Group

Since neither CARB nor the OPR has developed GHG emissions threshold, the SCAQMD formed a Working Group to develop significance thresholds related to GHG emissions. At the September 28, 2010 Working Group meeting, the SCAQMD released its most current version of the draft GHG emissions thresholds, which recommends a tiered approach that either provides a quantitative annual thresholds of 3,500 $MTCO_2e$ for residential uses, 1,400 $MTCO_2e$ for commercial uses, and 3,000 $MTCO_2e$ for mixed uses. An alternative annual threshold of 3,000 $MTCO_2e$ for all land use types is also proposed.

Rules 2700 and 2701

On December 5, 2008, the SCAQMD adopted Rules 2700 and 2701, which establishes the administrative structure for a voluntary program designed to quantify GHG emission reductions. Rule 2700 establishes definitions for the various terms used in Regulation XXVII - Climate Change. Rule 2701 provides specific protocols for private parties to follow to generate certified GHG emission reductions for projects within the district. Approved protocols include forest projects, urban tree planting, and manure management. The SCAQMD is currently developing additional protocols for other reduction measures. For a GHG emission reduction project to qualify, it must be verified and certified by the SCAQMD Executive Officer, who has 60 days to approve or deny the Plan to reduce GHG emissions. Upon approval of the Plan, the Executive Officer issues required to issue a certified receipt of the GHG emission reductions within 90 days.

Rule 2702

The SCAQMD adopted Rule 2702 on February 6, 2009, which establishes a voluntary air quality investment program from which SCAQMD can collect funds from parties that desire certified GHG emission reductions, pool those funds, and use them to purchase or fund GHG emission reduction projects within two years, unless extended by the Governing Board. Priority will be given to projects that result in co-benefit emission reductions of GHG emissions and criteria or toxic air pollutants within environmental justice areas. Further, this voluntary program may compete with the cap-and-trade program identified for implementation in CARB's Scoping Plan, or a Federal cap and trade program.

Rule 3002

The SCAQMD amended Rule 3002 on November 5, 2010 to include facilities that emit greater than 100,000 tons per year of CO_2e are required to apply for a Title V permit. A Title V permit is for facilities that are considered major sources of emissions.

Southern California Association of Governments

The SCAG is the regional planning agency for Los Angeles, Orange, Ventura, Riverside, San Bernardino, and Imperial Counties and addresses regional issues relating to transportation, the economy, community development and the environment. SCAG is the federally designated Metropolitan Planning Organization (MPO) for the majority of the southern California region and is the largest MPO in the nation. With respect to air quality planning, SCAG has prepared the RTP/SCS and *Regional Transportation Improvement Plan* (RTIP), which addresses regional development and growth forecasts. These plans form the basis for the land use and transportation components of the AQMP, which are utilized in the preparation of air quality forecasts and in the consistency analysis included in the AQMP. The RTP/SCS, RTIP, and AQMP are based on projections originating within the City and County General Plans.

Local – City of Los Angeles

Local jurisdictions, such as the City of Los Angeles, have the authority and responsibility to reduce air pollution through its police power and decision-making authority. Specifically, the City is responsible for the assessment and mitigation of air emissions resulting from its land use decisions. The City is also responsible for the implementation of transportation control measures as outlined in the 2007 AQMP and

2012 AQMP. Examples of such measures include bus turnouts, energy-efficient streetlights, and synchronized traffic signals. In accordance with CEQA requirements and the CEQA review process, the City assesses the air quality impacts of new development projects, requires mitigation of potentially significant air quality impacts by conditioning discretionary permits, and monitors and enforces implementation of such mitigation.

In accordance with the CEQA requirements, the City does not, however, have the expertise to develop plans, programs, procedures, and methodologies to ensure that air quality within the City and region will meet federal and state standards. Instead, the City relies on the expertise of the SCAQMD and utilizes the SCAQMD CEQA Handbook as the guidance document for the environmental review of plans and development proposals within its jurisdiction.

4.0 ATMOSPHERIC SETTING

4.1 Local Climate

The project site is located within the western central portion of Los Angeles County, which is part of the South Coast Air Basin that includes all of Orange County as well as the non-desert portions of Los Angeles, Riverside, and San Bernardino Counties. The South Coast Air Basin is located on a coastal plain with connecting broad valleys and low hills to the east. Regionally, the South Coast Air Basin is bounded by the Pacific Ocean to the southwest and high mountains to the east forming the inland perimeter. The project site is located toward the northwest portion of the South Coast Air Basin near the foot of the San Gabriel Mountain range, which defines the northern boundary of the South Coast Air Basin.

The climate of the western central portion of Los Angeles County, technically called an interior valley subclimate of the Southern California's Mediterranean-type climate, is characterized by hot dry summers, mild moist winters with infrequent rainfall, moderate afternoon breezes, and generally fair weather. Occasional periods of strong Santa Ana winds and winter storms interrupt the otherwise mild weather pattern. The clouds and fog that form along the area's coastline rarely extend as far inland as central Los Angeles County. When morning clouds and fog form, they typically burn off quickly after sunrise. The most important weather pattern from an air quality perspective is associated with the warm season airflow across the populated areas of the South Coast Air Basin. This airflow brings polluted air into central Los Angeles County late in the afternoon. This transport pattern creates unhealthful air quality that may extend to the project site particularly during the summer months.

Winds are an important parameter in characterizing the air quality environment of a project site because they both determine the regional pattern of air pollution transport and control the rate of dispersion near a source. Daytime winds in central Los Angeles County are usually light breezes from off the coast as air moves regionally onshore from the cool Pacific Ocean to the warm Mojave Desert interior of Southern California. These winds allow for good local mixing, but as discussed above, these coastal winds carry significant amounts of industrial and automobile air pollutants from the densely urbanized western portion of the South Coast Air Basin into the interior valleys which become trapped by the mountains that border the eastern edge of the South Coast Air Basin.

In the summer, strong temperature inversions may occur that limit the vertical depth through which air pollution can be dispersed. Air pollutants concentrate because they cannot rise through the inversion layer and disperse. These inversions are more common and persistent during the summer months. Over time, sunlight produces photochemical reactions within this inversion layer that creates ozone, a particularly harmful air pollutant. Occasionally, strong thermal convections occur which allows the air pollutants to rise high enough to pass over the mountains and ultimately dilute the smog cloud.

In the winter, light nocturnal winds result mainly from the drainage of cool air off of the mountains toward the valley floor while the air aloft over the valley remains warm. This forms a type of inversion known as a radiation inversion. Such winds are characterized by stagnation and poor local mixing and trap pollutants such as automobile exhaust near their source. Despite light wind conditions, especially at night and in the early morning, winter is generally a period of good air quality in the project vicinity.

The temperature and precipitation levels for San Fernando, which is the nearest monitoring station to the project site, is shown on the following page in Table E. Table E shows that July is typically the warmest month and January is typically the coolest month. Rainfall in the project area varies considerably in both time and space. Almost all the annual rainfall comes from the fringes of mid-latitude storms from late November to early April, with summers being almost completely dry.

Table E – San Fernando Monthly Climate Data

	Jan	Feb	Mar	Apr	May	Jun	Jul	Aug	Sep	Oct	Nov	Dec
Average Max. Temperature	65.0	66.8	70.1	74.7	78.5	84.4	92.4	92.2	88.9	81.1	73.4	66.1
Average Min. Temperature	42.9	43.3	43.9	46.5	49.6	52.4	56.1	56.3	54.4	50.7	47.6	44.6
Average Total Precipitation (in.)	3.78	3.46	2.71	1.49	0.39	0.39	0.02	0.03	0.17	0.52	1.73	2.96

Source: http: http://www.wrcc.dri.edu/cgi-bin/cliMAIN.pl?ca7759

4.2 Monitored Local Air Quality

The air quality at any site is dependent on the regional air quality and local pollutant sources. Regional air quality is determined by the release of pollutants throughout the air South Coast Air Basin. Estimates of the existing emissions in SCAB provided in the 2012 AQMP, indicate that collectively, mobile sources account for 59 percent of the VOC, 88 percent of the NOx emissions and 40 percent of directly emitted PM2.5, with another 10 percent of PM2.5 from road dust.

SCAQMD has divided the South Coast Air Basin into 38 air-monitoring areas with a designated ambient air monitoring station representative of each area. The project site is located in air monitoring area 7, which is located in East San Fernando Valley and covers the area from the Hollywood Hills to San Fernando. The nearest air monitoring station to the project site is the Burbank West Palm Avenue Monitoring Station (Burbank Station), which is located approximately six miles southeast of the project site at 228 W. Palm Avenue, Burbank. However, it should be noted that due to the air monitoring station's distance from the project site, recorded air pollution levels at the Burbank Station reflect with varying degrees of accuracy, local air quality conditions at the project site.

Table F on page 31 presents the monitored pollutant levels from the Burbank Station. The monitoring data presented in Table F shows that ozone and particulate matter (PM10 and PM2.5) are the air pollutants of primary concern in the project area, which are detailed below:

Ozone

During the last three years, the State 1-hour concentration standard for ozone has been exceeded between 0 and 8 days each year at the Burbank Station. The State 8-hour ozone standard has been exceeded between 2 and 17 days each year over the past three years at the Burbank Station. The Federal 8-hour ozone standard was exceeded between 1 and 8 days each year over the past three years at the Burbank Station.

Ozone is a secondary pollutant as it is not directly emitted. Ozone is the result of chemical reactions between other pollutants, most importantly hydrocarbons (VOC) and NO_2, which occur only in the presence of bright sunlight. Pollutants emitted from upwind cities react during transport downwind to produce the oxidant concentrations experienced in the area. Many areas of Southern California contribute to the ozone levels experienced at this monitoring station, with the more significant areas being those directly upwind.

Carbon Monoxide

CO is another important pollutant that is due mainly to motor vehicles. The Burbank Station, did not record an exceedance of the state or federal 1-hour or 8-hour CO standards for the last three years. It should be noted that CO is currently in attainment in the South Coast Air Basin and that monitoring of CO within the South Coast Air Basin ended on March 31, 2013.

Table F – Local Area Air Quality Monitoring Summary

Pollutant (Standard)	Year[1]		
	2012	2013	2014
Ozone:			
Maximum 1-Hour Concentration (ppm)	0.117	0.110	0.091
Days > CAAQS (0.09 ppm)	**8**	**4**	0
Maximum 8-Hour Concentration (ppm)	0.088	0.083	0.079
Days > NAAQS (0.075 ppm)	**8**	**6**	**1**
Days > CAAQs (0.070 ppm)	**17**	**17**	**2**
Carbon Monoxide:			
Maximum 1-Hour Concentration (ppm)	2.8	2.4	--*
Days > NAAQS and CAAQS (20 ppm)	0	0	--*
Maximum 8-Hour Concentration (ppm)	2.35	--*	--*
Days > NAAQS and CAAQS (9 ppm)	0	--*	--*
Nitrogen Dioxide:			
Maximum 1-Hour Concentration (ppb)	79.5	72.4	73.2
Days > NAAQS (100 ppb)	0	0	0
Sulfur Dioxide:			
Maximum 24-Hour Concentration (ppm)	0.002	0.002	--*
Days > CAAQS (0.04 ppm)	0	0	0
Inhalable Particulates (PM10):			
Maximum 24-Hour California Measurement (ug/m^3)	55.0	53.3	68.6
Days > NAAQS (150 ug/m^3)	0	0	0
Days > CAAQS (50 ug/m^3)	1	1	1
Annual Arithmetic Mean (AAM) (ug/m^3)	26.4	25.8	28.8
Annual > NAAQS (50 ug/m^3)	No	No	No
Annual > CAAQS (20 ug/m^3)	**Yes**	**Yes**	**Yes**
Fine Particulates (PM2.5):			
Maximum 24-Hour National Measurement (ug/m^3)	54.2	45.1	64.6
Days > NAAQS (35 ug/m^3)	**2**	**4**	**2**
Annual Arithmetic Mean (AAM) (ug/m^3)	12.2	12.2	12.2
Annual > NAAQS and CAAQS (12 ug/m^3)	**Yes**	**Yes**	**Yes**

Notes: Exceedances are listed in **bold.** CAAQS = California Ambient Air Quality Standard; NAAQS = National Ambient Air Quality Standard; ppm = parts per million; ppb = parts per billion.
[1] Data obtained from the Burbank Station.
* Insufficient or no data.
Source: http://www.arb.ca.gov/adam/

Nitrogen Dioxide

The Burbank Station did not record an exceedance of the Federal 1-hour NO_2 standard for the last three years.

Sulfur Dioxide

The Burbank Station, did not record an exceedance of the state 24-hour SO_2 standards for the last three years.

Particulate Matter

The State 24-hour concentration standard for PM10 has been exceeded by one day each year over the past three years at the Burbank Station. Over the past three years the Federal 24-hour standard for PM10 has not been exceeded at the Burbank Station. The annual PM10 concentration at the Burbank Station has exceeded the State standard for the past three years and has not exceeded the Federal standard for the past three years.

Over the past three years the Federal 24-hour concentration standard for PM2.5 has been exceeded between 2 and 4 days each year over the past three years at the Burbank Station. The annual PM2.5 concentration at the Burbank Station has exceeded both the State and Federal standard for the past three years. There does not appear to be a noticeable trend for PM10 or PM2.5 in either maximum particulate concentrations or days of exceedances in the area. Particulate levels in the area are due to natural sources, grading operations, and motor vehicles.

4.3 Toxic Air Contaminant Levels in the South Coast Air Basin

In order to determine the South Coast Air Basin-wide risks associated with major airborne carcinogens, the SCAQMD conducted the Multiple Air Toxics Exposure Study (MATES) studies. According to the SCAQMD's MATES-III study, the northern portion of the project site has an estimated cancer risk of 630 in one million chance of cancer and the southern portion of the project site has an estimated cancer risk of 749 in one million chance of cancer. In comparison, the average cancer risk for the SCAQMD portion of Los Angeles County is 912 in one million. The primary sources of TACs in the study area are from diesel emissions from trucks operating on State Route 170 and Interstate 5.

In order to provide a perspective of risk, it is often estimated that the incidence in cancer over a lifetime for the U.S. population will affect 25 percent of all persons, or a risk of about 250,000 per million persons. The MATES-III study referenced a Harvard Report on Cancer Prevention, which estimated that of cancers associated with known risk factors, about 30 percent were related to tobacco, about 30 percent were related to diet and obesity, and about 2 percent were associated with environmental pollution related exposures that includes hazardous air pollutants.

5.0 MODELING PARAMETERS AND ASSUMPTIONS

5.1 Criteria Pollutant Emissions

Typical emission rates from construction activities were obtained from CalEEMod Version 2013.2.2. CalEEMod is a computer model published by the SCAQMD for estimating air pollutant emissions. The CalEEMod program uses the EMFAC2011 computer program to calculate the emission rates specific for Los Angeles County for construction-related employee vehicle trips and the OFFROAD2011 computer program to calculate emission rates for heavy truck operations. EMFAC2011 and OFFROAD2011 are computer programs generated by CARB that calculates composite emission rates for vehicles. Emission rates are reported by the program in grams per trip and grams per mile or grams per running hour. The proposed project was analyzed in the CalEEMod model based on 169 acres of User Defined Industrial land use.

Onsite Equipment Emissions

Construction activities have been analyzed as occurring over one phase of construction, that would start in Spring 2016 and would last for 18 months. According to the project applicant, the onsite equipment would consist of the simultaneous operation of two bulldozers, two excavators, one sediment shaker/sifter, three water trucks, and one street sweeper. The bulldozers, excavators, and sediment shaker were modeled as operating eight hours per day and the water trucks and street sweeper were modeled as operating four hours per day. Either a mounted impact hammer or hoe-ram would also be utilized during the demolition of the existing intake structure, however the hoe-ram would most likely be mounted on an excavator that has been accounted for above, so no separate equipment was modelled for the hoe-ram. The mitigation of water all exposed areas three times per day was chosen in order to account for the fugitive dust reduction that would occur through adhering to SCAQMD Rule 403, which requires that the Best Available Control Measures be utilized to reduce fugitive dust emissions.

Worker Trip Emissions

The *Traffic Impact Study Pacoima Spreading Grounds Improvement Project* (Traffic Study), prepared by Linscott Law & Greenspan, May 20, 2015, found that the proposed project would generate approximately 18 worker trips per day to the Pacoima Spreading Grounds. The 18 worker trips per day were analyzed under the construction emissions analysis in the CalEEMod model.

Demolition Truck Trip Emissions

The proposed project would include the removal of approximately 614 cubic yards of concrete from the removal of the existing intake canal. The demolished concrete would most likely be hauled to Sunshine Canyon Landfill. The removal of 614 cubic yards of concrete were accounted for in the CalEEMod under Material Exported for the analyzed grading phase. This resulted in generating a total of 77 haul truck trips traveling 8 miles to Sunshine Canyon Landfill.

Haul Truck Trip Emissions

The proposed project would require approximately 1.37 million cubic yards of sediment to be exported from the site to either Boulevard Pit, Sheldon Pit, or Cal-Mat Pit, or a combination of the sites. The Traffic Study and project applicant found that the export of sediment would generate either 240 daily 14-cubic yard haul round trip truck trips or 180 daily 18-cubic yard haul round trip truck trips, based on operating 6 days a week for 18 months. Emissions from both the 14-cubic yard haul trucks trips and the 18-cubic yard haul truck trips have been calculated in order to determine the impacts from both alternatives. The haul truck trip emissions were analyzed as operational emissions in the CalEEMod model because it is not possible to specify the type of haul truck in the construction emission analysis portion of the CalEEMod model. The

CalEEMod model printouts for the 14-cubic yard haul truck analysis is provided in Appendix A and the CalEEMod model printouts for the 18-cubic yard haul truck analysis is provided in Appendix B.

For the 14-cubic yard haul truck analysis, the vehicle trips were set to 2.84 trips per acre for the 169 acre site, which results in 480 haul truck trips per day. For the 18-cubic yard haul truck analysis, the vehicle trips were set to 2.13 trips per acre for the 169 acre site, which results in 360 haul truck trips per day. The trip type was set to 100 percent Primary Trips in the CalEEMod model and the nonresidential commercial to commercial (C-C) trips were set to 100 percent to represent the haul truck trips with a travel distance of 5.7 miles, which is the travel length to farthest away pit. The fleet mix in the CalEEMod model was revised to 100 percent medium-heavy duty trucks for the 14-cubic yard haul truck analysis and 100 percent heavy-heavy duty trucks for the 18-cubic yard haul truck analysis. According to the County of Los Angeles Department of Public Works, an average of an eighth mile of each haul truck trip would occur on a dirt road on the project site. In order to account for the fugitive dust emissions that would occur from dirt road travel the CalEEMod model was set to 97.8 percent paved roads with unpaved roads with a moisture content of 12 percent and a mean vehicle speed of 15 miles per hour.

5.2 Toxic Air Contaminant Emissions

The on-going operation of the proposed project would generate toxic air contaminant (TAC) emissions from diesel truck and equipment emissions created during construction activities associated with the proposed project. Important issues that affect the dispersion modeling of TAC emissions include the following: 1) Model Selection, 2) Source Treatment, 3) Meteorological Data, and 4) Receptor Grid. Each of these issues is addressed below.

Model Selection

The AERMOD View Version 8.9.0 Model was used for all dispersion modeling. Key dispersion modeling options selected include the regulatory default option and urban modeling option based on a population of 9,862,049 for Los Angeles County. Flagpole receptor height was set to 0 meters. For each analysis area the AERMOD model was run twice, once for PM10 emissions and once for total organic gases, which includes VOC emissions in order to calculate both the cancer and non-cancer acute and chronic health risks. The proposed project's TAC impacts have been analyzed in two separate geographical locations, with one area that includes the spreading basins and the truck route to Interstate 5 and the other that includes the area from Interstate 5 to Sheldon and Cal-Mat Pits. The model runs of both the area containing the spreading basins and the pits, AERMAP was run using a 1 degree USGS DEM Map of Los Angeles.

Source Treatment

The proposed project would consist of intake structure improvements, removal of sediment and reconfiguration of the spreading basins. The proposed improvements would require the use of diesel powered off-road equipment as well as diesel powered haul trucks, whose emissions sources have been analyzed separately below. All of the sources were modelled based on being operational between 7:00 a.m. and 7:00 p.m., from Monday through Saturday. The construction activities will be limited to an 8-hour window within this time period, however since the exact timing of construction activities is not known, the analysis of the 12 hour period provides for a worst-case analysis of the meteorological conditions over this entire timeframe.

<u>Onsite Diesel Equipment</u>

According to the project applicant, the onsite equipment during construction activities would consist of the simultaneous operation of two bulldozers, two excavators, three water trucks, and one street sweeper. The PM10 and VOC equipment exhaust emissions have been calculated through use of the CalEEMod model detailed above in Section 5.1 for the criteria pollutant emissions analysis. The CalEEMod model utilizes

the worst-case engine Tier level allowed under CARB's regulations for off-road diesel equipment. For the year 2016, the CalEEMod assumes that the onsite equipment will average at approximately a Tier 2 level, however that may be achieved with a mixture of Tier 0, 1, 2, 3, or 4 equipment. The CalEEMod model found that the onsite diesel equipment exhaust would create 2.93 pounds of PM10 per day and 5.71 pounds of VOC per day. The CalEEMod model printouts that detail these results are shown in Appendices A and B. The onsite diesel equipment is anticipated to operate between 7:00 a.m. and 7:00 p.m.. The onsite diesel equipment was modeled as six point sources located around the perimeter of the project site with emission rates of 0.0051 grams of PM10 per second and 0.010 grams of VOC per second, which is based on dividing the total emissions by six. The equipment point sources were modeled with a 12.6 foot height, a 0.1 meter diameter, a velocity of 51.71 meters per second, and a temperature of 366 K.

Haul Trucks

The Traffic Study, found that the export of sediment would generate either 480 daily 14 cubic yard haul truck trips or 360 daily 18 cubic yard haul truck trips, based on operating 6 days a week for 18 months. The onsite truck emissions have been analyzed separately for truck travel and truck idling.

Truck Travel

According to the project applicant, the location of the onsite loading of the haul trucks will be constantly changing on the project site, however efforts will be made to limit the use of the perimeter road for truck loading. In order, to provide a conservative analysis, half of the trucks were modeled as making a loop around the portion of the spreading basin located north of Devonshire Street and half were modeled as making a loop around the portion of the spreading basin located south of Devonshire Street. The onsite diesel truck travel was modeled by using two line volume sources. The emission factors used for the roadway line volume sources was obtained from a model run of the web based version of EMFAC2011 for Los Angeles County at http://www.arb.ca.gov/emfac/ for the year 2016 for both a T6 instate construction heavy truck and a T7 Tractor construction truck traveling at 10 miles per hour. The EMFAC model calculated an emission rate of 0.135 grams of PM10 per mile for the T6 trucks and 0.185 grams of PM10 per mile for the T7 trucks. The proposed project would either utilize 480 T6 trucks per day or 360 T7 trucks per day, which results in 25 percent more T6 trucks than T7 trucks. Since T7 trucks produce 27 percent higher PM10 emissions than the T6 trucks, the T7 truck alternative would result in higher PM10 emissions and has been utilized in this analysis. The EMFAC model also calculated that the T7 trucks would emit 1.959 grams of total organic gas (TOG) per mile. The EMFAC2011 model run printout is provided in Appendix C. This resulted in emission rates of 3.007E-06 grams per second of PM10 and 3.180E-05 grams per second of TOG for the onsite haul truck line sources, which is based on the haul trucks being operational between 7:00 a.m. and 7:00 p.m., Monday through Saturday. The onsite line sources were modeled with a 6 foot height and 12 foot width.

The truck travel on public roads was also modeled for the area of the spreading basins from the middle of the project site on Devonshire Street to north on Arleta Avenue to north on Paxton Street to Interstate 5. For the area from Interstate 5 to Sheldon and Cal-Mat Pits, the truck travel was modeled from Interstate 5 off-ramp to Laurel Canyon Boulevard to north on Sheldon Street to the turn off for the Sheldon and Cal-Mat pits. This route was chosen since it was considered as a worst-case scenario, since it would place all of the haul trucks on the route that runs nearest to the sensitive receptors. Per SCAQMD guidance the truck travel on I-5 was not analyzed, since the proposed project would make a negligible change in TAC emissions along I-5 where according to *2013 Annual Average Daily Truck Traffic on the California State Highway System,* prepared by Caltrans, 2014, I-5 at SR-118 has 21,291 daily trucks and the proposed project would represent 2.3 percent of the truck traffic on I-5.

The offsite diesel truck travel to the Sheldon and Cal-Mat Pits was modeled as a line volume source. The emission factors used for the roadway line volume sources was also obtained from the EMFAC2011 model

as detailed above for the onsite truck travel with the only difference is that the speed was increased to 40 miles per hour. The EMFAC2011 model calculated emissions rates of 0.080 grams of PM10 per mile and 0.227 grams of TOG per mile. This resulted in emission rates of 8.625E-06 grams per second of PM10 and 2.453E-05 grams per second of TOG for the offsite haul truck line sources, which is based on the haul trucks being operational 12 hours per day from Monday through Saturday. The offsite line sources were modeled with a 6 foot height and 40 foot width.

Truck Idling

The diesel truck idling was modeled as point sources. For the model run of the spreading basins, the truck idling was modeled based on two point sources with one placed in the central portion of the spreading basins located north of Devonshire Street and one placed in the central portion of the spreading basins located south of Devonshire Street. For the model run of the area near the pits, the truck idling was also modeled based on two point sources, with one placed at the central portion of the Sheldon Pit and one placed at the central portion of the Cal-Mat Pit. The analysis was based on half of the 360 daily truck trips idling for 7.5 minutes at each idling location. The emissions factor used for the truck idling point source was based on the EMFAC2011 Idling Emission Rates spreadsheet, which details that for the year 2016 for T7 trucks, model year 2007 or newer vehicles produce 0.108 grams of PM10 per hour and 8.420 grams of TOG per hour. The model year 2007 or newer vehicles were chosen, since Section 2025, Title 13 Article 4.5, Chapter 1 of the California Code of Regulations requires all commercial trucks operating in California to meet the model year 2007 PM standards by year 2014. This results in a point source emissions rate of 5.625E-05 grams per second of PM10 and 4.385E-03 grams per second of TOG for the haul truck idling point sources, which is based on the haul trucks operating 12 hour per day. The idling point sources were modeled with a 12.6 foot height, a 0.1 meter diameter, a velocity of 51.71 meters per second, and a temperature of 366 K.

Meteorological Data

Meteorological data from the SCAQMD's Burbank monitoring site was selected for this modeling application. Five full years of sequential meteorological data was collected at the Burbank Station from 2008 to 2012 by the SCAQMD. The SCAQMD processed the data for input to the model. The data was obtained at SCAQMD's website: http://www.aqmd.gov/home/library/air-quality-data-studies/meteorological-data/data-for-aermod.

Receptor Grid

The nearest sensitive receptors to the spreading basins that may be impacted by the proposed project are multi-family homes as near as 35 feet southwest of the proposed improvements to the spreading grounds, single-family homes as near as 40 feet north and west of the proposed improvements to the spreading grounds, and Devonwood Park located as near as 30 feet west of the proposed improvements to the spreading grounds. There are also single-family homes as near as 50 feet north of the intake canal improvements and single-family and multi-family homes as near as 25 feet from where haul trucks would operate on the nearby roads. Discrete receptors were placed at the locations of the representative off-site residential structures and the park and grid receptors were used out to 500 meters (1,640 feet). The locations of the sources and receptors modeled in the AERMOD model is shown in Figure 3 on page 37 for the area near the spreading basins

The nearest sensitive receptors to the haul route from Interstate 5 to Sheldon and Cal-Mat Pits consist of single-family and multi-family homes located as near as 20 feet from the travel lanes of Sheldon Street and 25 feet from the nearest structures at Sun Valley High School. Discrete Receptors were placed at the locations of representative residential structures and at the high school. The locations of the sources and receptors modeled in the AERMOD model is shown in Figure 4 on page 38 for the area near the pits.

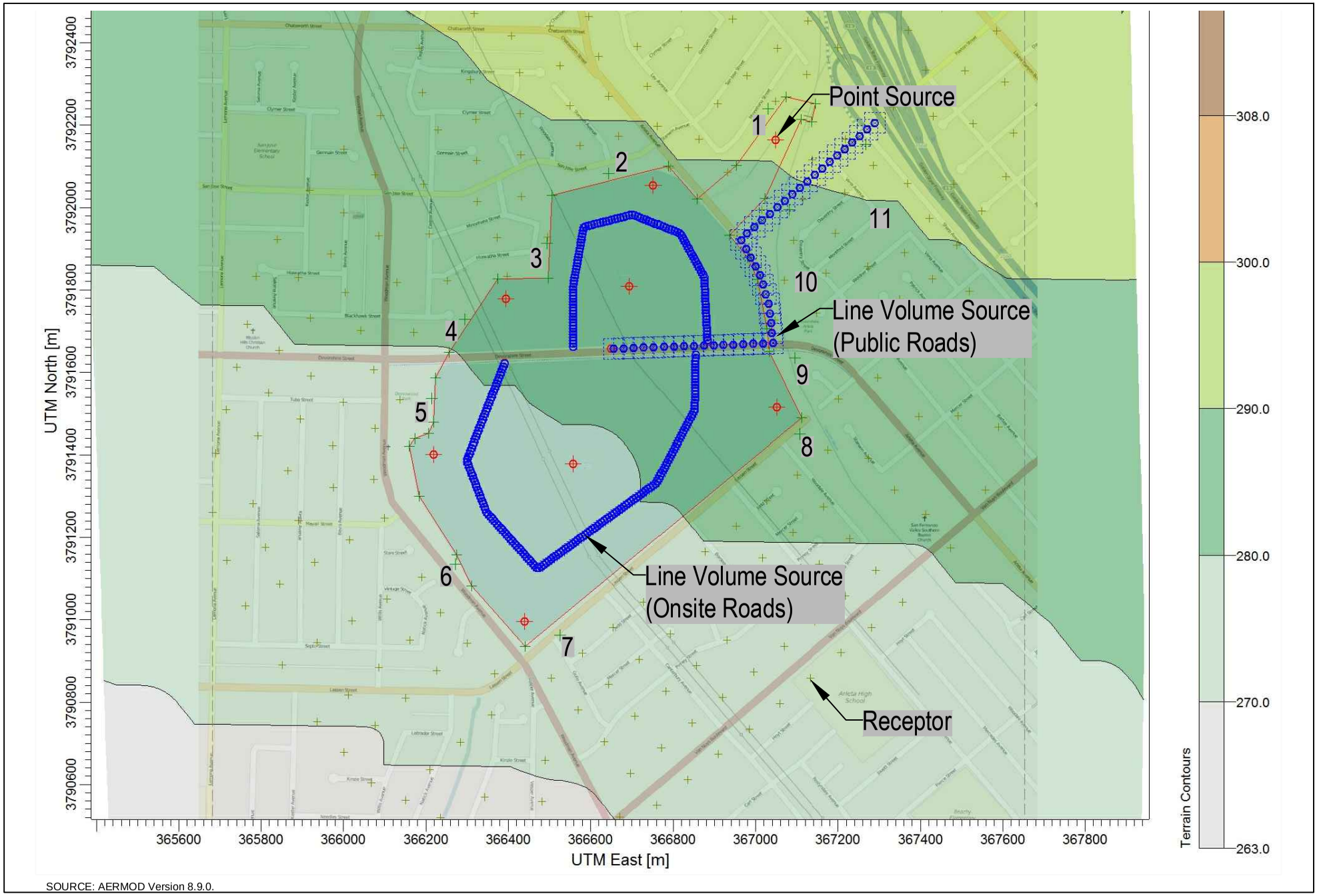

SOURCE: AERMOD Version 8.9.0.

N

VISTA ENVIRONMENTAL

Figure 3

Air Dispersion Model Source and Receptor Locations near the Spreading Basins

SOURCE: AERMOD Version 8.7.0.

N

VISTA ENVIRONMENTAL

Figure 4

Air Dispersion Model Source and Receptor Locations near the Pits

6.0 AIR QUALITY STANDARDS

6.1 Regional Air Quality

Many air quality impacts that derive from dispersed mobile sources, which are the dominate pollution generators in the South Coast Air Basin, often occurs hours later and miles away after photochemical processes have converted primary exhaust pollutants into secondary contaminants such as ozone. The incremental regional air quality impact of an individual project is generally very small and difficult to measure. Therefore, SCAQMD has developed significance thresholds based on the volume of pollution emitted rather than on actual ambient air quality because the direct air quality impact of a project is not quantifiable on a regional scale. The SCAQMD CEQA Handbook states that any project in the South Coast Air Basin with daily emissions that exceed any of the identified significance thresholds should be considered as having an individually and cumulatively significant air quality impact. For the purposes to this air quality impact analysis, a regional air quality impact would be considered significant if emissions exceed the SCAQMD significance thresholds identified in Table G.

Table G – SCAQMD Regional Pollutant Emission Thresholds of Significance

	Pollutant Emissions (pounds/day)						
	VOC	**NOx**	**CO**	**SOx**	**PM10**	**PM2.5**	**Lead**
Construction	75	100	550	150	150	55	3
Operation	55	55	550	150	150	55	3

Source: http://www.aqmd.gov/ceqa/handbook/signthres.pdf

6.2 Local Air Quality

Project-related construction air emissions may have the potential to exceed the State and Federal air quality standards in the project vicinity, even though these pollutant emissions may not be significant enough to create a regional impact to the South Coast Air Basin. In order to assess local air quality impacts the SCAQMD has developed Localized Significant Thresholds (LSTs) to assess the project-related air emissions in the project vicinity. SCAQMD has also provided *Final Localized Significance Threshold Methodology* (LST Methodology), July 2008, which details the methodology to analyze local air emission impacts. The LST Methodology found that the primary emissions of concern are NO_2, CO, PM10, and PM2.5.

The significance thresholds for the local emissions of NO_2 and CO are determined by subtracting the highest background concentration from the last three years of these pollutants from Table D above, from the most restrictive ambient air quality standards for these pollutants that are outlined in the LSTs. Since PM10 and PM2.5 currently exceed the most restrictive ambient air quality standards in the South Coast Air Basin, their thresholds have been directly based on the LSTs and therefore, background concentrations of PM10 and PM2.5 are not factored into the threshold. Table H below shows the LSTs for NO_2, CO, and PM10 and PM2.5 as well as the background concentrations and resultant significance concentrations.

Table H – SCAQMD Local Air Quality Thresholds of Significance for Construction

Pollutant	SCAQMD LSTs[1]	Background Level[2]	Significance Thresholds[3]
NO_2 - 1-Hour Average (State)	0.18 ppm (338 μg/m^3)	79.5 ppb (149 μg/m^3)	189 μg/m^3
CO - 1-Hour Average (State)	20 ppm (23,000 μg/m^3)	2.8 ppm (3,220 μg/m^3)	19,780 μg/m^3
CO - 8-Hour Average (State/Federal)	9.0 ppm (10,000 μg/m^3)	2.37 ppm (2,633 μg/m^3)	7,367 μg/m^3
PM10 - 24 Hour Average[4]	10.4 μg/m^3	--	10.4 μg/m^3
PM2.5 - 24-Hour Average[4]	10.4 μg/m^3	--	10.4 μg/m^3

Notes:
[1] Obtained from: http://www.aqmd.gov/ceqa/handbook/signthres.pdf.
[2] Obtained from Table D above and based on the highest measured concentrations from the last 3 years at the Burbank Station.
[3] Represents the maximum offsite concentrations allowed during operations.
[4] Based on SCAQMD Rule 403(d)(3).

6.3 Toxic Air Contaminants

According to the SCAQMD CEQA Handbook, any project that has the potential to expose the public to toxic air contaminants in excess of the following thresholds would be considered to have a significant air quality impact:

- If the Maximum Incremental Cancer Risk is 10 in one million or greater; or
- Toxic air contaminants from the proposed project would result in a Hazard Index increase of 1 or greater.

In order to determine if the proposed project may have a significant impact related to hazardous air pollutants (HAP), the *Health Risk Assessment Guidance for analyzing Cancer Risks from Mobile Source Diesel Idling Emissions for CEQA Air Quality Analysis*, (Diesel Analysis) prepared by SCAQMD, August 2003, recommends that if the proposed project is anticipated to create HAPs through stationary sources or regular operations of diesel trucks on the project site, then the proximity of the nearest receptors to the source of the HAP and the toxicity of the HAP should be analyzed through a comprehensive facility-wide health risk assessment (HRA).

6.4 Odor Impacts

The SCAQMD CEQA Handbook states that an odor impact would occur if the proposed project creates an odor nuisance pursuant to SCAQMD Rule 402, which states:

> "A person shall not discharge from any source whatsoever such quantities of air contaminants or other material which cause injury, detriment, nuisance, or annoyance to any considerable number of persons to the public, or which endanger the comfort, repose, health or safety of any such persons or the public, or which cause, or have a natural tendency to cause, injury or damage to business or property.
>
> The provisions of this rule shall not apply to odors emanating from agricultural operations necessary for the growing of crops or the raising of fowl or animals."

The SCAQMD receives and investigates odor complaints from nearby residents and if six or more odor events are reported in a year the SCAQMD will consider the odor impact a nuisance and has the authority to require the offender to implement measures to reduce the odor impacts. If the proposed project results in a violation of Rule 402 with regards to odor impacts, then the proposed project would create a significant odor impact.

6.5 Greenhouse Gases

The proposed project is located within the jurisdiction of the SCAQMD. In order to identify significance criteria under CEQA for development projects, SCAQMD initiated a Working Group, which provided detailed methodology for evaluating significance under CEQA. At the September 28, 2010 Working Group meeting, the SCAQMD released its most current version of the draft GHG emissions thresholds, which recommends a tiered approach that provides a quantitative annual threshold of 3,000 $MTCO_2e$ for all land use types. Although the SCAQMD provided substantial evidence supporting the use of the above threshold, they have not been formally adopted because the SCAQMD is awaiting the outcome of the pending appeal of the California Building Industry Association v. Bay Area Air Quality Management District (BAAQMD), is resolved. Therefore, the proposed project would be considered to create a significant cumulative GHG impact if the proposed project would exceed the annual threshold of 3,000 $MTCO_2e$.

7.0 IMPACT ANALYSIS

7.1 CEQA Thresholds of Significance

Consistent with CEQA and the State CEQA Guidelines, a significant impact related to air quality and global climate change would occur if the proposed project is determined to result in:

- Conflict with or obstruct implementation of the applicable air quality plan;
- Violate any air quality standard or contribute substantially to an existing or projected air quality violation;
- Result in a cumulatively considerable net increase of any criteria pollutant for which the project region is non-attainment under an applicable Federal or State ambient air quality standard (including releasing emissions which exceed quantitative thresholds for ozone precursors);
- Expose sensitive receptors to substantial pollutant concentrations;
- Create objectionable odors affecting a substantial number of people.
- Generate GHG emissions, either directly or indirectly, that may have a significant impact on the environment; or
- Conflict with any applicable plan, policy or regulation of an agency adopted for the purpose of reducing the emissions of GHGs.

7.2 Air Quality Compliance

The proposed project would not conflict with or obstruct implementation of the SCAQMD Air Quality Management Plan (AQMP). The following section discusses the proposed project's consistency with the SCAQMD AQMP.

SCAQMD Air Quality Management Plan

The California Environmental Quality Act (CEQA) requires a discussion of any inconsistencies between a proposed project and applicable general plans and regional plans (CEQA Guidelines Section 15125). The regional plan that applies to the proposed project includes the SCAQMD AQMP. Therefore, this section discusses any potential inconsistencies of the proposed project with the AQMP.

The purpose of this discussion is to set forth the issues regarding consistency with the assumptions and objectives of the AQMP and discuss whether the proposed project would interfere with the region's ability to comply with Federal and State air quality standards. If the decision-makers determine that the proposed project is inconsistent, the lead agency may consider project modifications or inclusion of mitigation to eliminate the inconsistency.

The SCAQMD CEQA Handbook states that "New or amended GP Elements (including land use zoning and density amendments), Specific Plans, and significant projects must be analyzed for consistency with the AQMP." Strict consistency with all aspects of the plan is usually not required. A proposed project should be considered to be consistent with the AQMP if it furthers one or more policies and does not obstruct other policies. The SCAQMD CEQA Handbook identifies two key indicators of consistency:

(1) Whether the project will result in an increase in the frequency or severity of existing air quality violations or cause or contribute to new violations, or delay timely attainment of air quality standards or the interim emission reductions specified in the AQMP.

(2) Whether the project will exceed the assumptions in the AQMP or increments based on the year of project buildout and phase.

Both of these criteria are evaluated in the following sections.

Criterion 1 - Increase in the Frequency or Severity of Violations?

Based on the air quality modeling analysis contained in this report, short-term regional construction air emissions would not result in significant impacts based on SCAQMD regional thresholds of significance discussed in Section 6.1, local thresholds of significance discussed in Section 6.2, or toxic air emissions impacts discussed in Section 6.3. The ongoing operation of the proposed project would not generate any additional air pollutant emissions. Therefore, no long-term impact would occur and no mitigation would be required.

Therefore, based on the information provided above, the proposed project would be consistent with the first criterion.

Criterion 2 - Exceed Assumptions in the AQMP?

Consistency with the AQMP assumptions is determined by performing an analysis of the proposed project with the assumptions in the AQMP. The emphasis of this criterion is to insure that the analyses conducted for the proposed project are based on the same forecasts as the AQMP. The *2012-2035 Regional Transportation/Sustainable Communities Strategy* consists of three sections: Core Chapters, Ancillary Chapters, and Bridge Chapters. The Growth Management, Regional Mobility, Air Quality, Water Quality, and Hazardous Waste Management chapters constitute the Core Chapters of the document. These chapters currently respond directly to federal and state requirements placed on SCAG. Local governments are required to use these as the basis of their plans for purposes of consistency with applicable regional plans under CEQA. For this project, the City of Los Angeles Land Use Plan defines the assumptions that are represented in the AQMP.

The project site is currently designated as Open Space in the General Plan and is also zoned Open Space (OS-1XL-O). The proposed project would not change the current use as a spreading ground and is consistent with the current land use designation and zoning. Therefore, the proposed project would not result in an inconsistency with the current land use designation and zoning. Therefore, the proposed project is not anticipated to exceed the AQMP assumptions for the project site and is found to be consistent with the AQMP for the second criterion.

Based on the above, the proposed project will not result in an inconsistency with the SCAQMD AQMP. Therefore, a less than significant impact will occur.

Level of Significance

Less than significant impact.

7.3 Air Quality Standard Violation

The proposed project would not violate an air quality standard or contribute substantially to an existing or projected air quality violation. The following section calculates the potential air emissions associated with the construction and operations of the proposed project and compares the emissions to the SCAQMD standards.

Construction Emissions

The proposed project would consist of intake structure improvements, removal of sediment and reconfiguration of the spreading basins. The construction emissions have been analyzed for both regional and local air quality impacts as well as potential toxic air impacts and odor impacts.

Construction-Related Regional Impacts

The CalEEMod model has been utilized to calculate the construction-related regional emissions from the proposed project and the input parameters utilized in this analysis have been detailed in Section 5.1. The worst-case daily construction-related criteria pollutant emissions from the proposed project from the use of either 14-cubic yard haul trucks or 18-cubic yard haul trucks are shown below in Table I. Table I shows that none of the analyzed criteria pollutants would exceed the regional emissions thresholds. Therefore, a less than significant regional air quality impact would occur from construction of the proposed project.

Table I – Construction-Related Criteria Pollutant Emissions

Activity	Pollutant Emissions[1] (pounds per day)					
	VOC	NOx	CO	SO_2	PM10	PM2.5
Onsite Equipment	5.71	59.97	40.93	0.06	8.31	5.31
Worker Trips	0.14	0.19	2.08	0.00	0.34	0.09
Demolition Haul Trucks	0.00	0.02	0.03	0.00	0.03	0.00
14 Cubic Yard Haul Trucks[2]	3.37	27.48	32.53	0.07	27.22	5.01
18 Cubic Yard Haul Trucks[3]	3.73	34.42	61.48	0.08	23.28	4.46
Worst-Case Total Emissions[4]	9.58	94.60	104.52	0.14	35.90	10.49
SCAQMD Thresholds	**75**	**100**	**550**	**150**	**150**	**55**
Exceeds Threshold?	No	No	No	No	No	No

Notes:
[1] Emissions based on adherence to fugitive dust suppression requirements from SCAQMD Rule 403.
[2] Based on 480 Medium-Heavy Duty (T6) truck trips per day.
[3] Based on 360 Heavy-Heavy Duty (T7) truck trips per day.
[4] Based on highest of either the 14-cubic yard haul trucks or 18-cubic yard haul trucks for each pollutant.
Source: CalEEMod Version 2013.2.2.

Construction-Related Local Impacts

Construction-related air emissions may have the potential to exceed the State and Federal air quality standards in the project vicinity, even though these pollutant emissions may not be significant enough to create a regional impact to the South Coast Air Basin. The proposed project has been analyzed for the potential local criteria pollutant impacts created from construction-related fugitive dust and construction equipment and from toxic air contaminants created from diesel emissions**.**

Local Criteria Pollutant Impacts from Construction

The local criteria pollutant emissions from construction were analyzed through utilizing the methodology described in *Localized Significance Threshold Methodology* (LST Methodology), prepared by SCAQMD, revised October 2009. The LST Methodology found the primary criteria pollutant emissions of concern are NOx, CO, PM10, and PM2.5. In order to determine if any of these pollutants require a detailed analysis of the local air quality impacts, each phase of construction was screened using the SCAQMD's Mass Rate LST Look-up Tables. The Look-up Tables were developed by the SCAQMD in order to readily determine if the daily onsite emissions of CO, NOx, PM10, and PM2.5 from the proposed project could result in a significant impact to the local air quality.

The emission thresholds were calculated based on the East San Fernando Valley source receptor area and a disturbance of five acres which is the largest acreage available in the Look-Up Tables. As detailed above in Section 1.4, the nearest offsite sensitive receptors to the proposed project area located as near as 30 feet from the proposed improvements to the spreading grounds. According to the LST Methodology, any receptor located closer than 25 meters (82 feet) shall be based on the 25-meter thresholds. Table J shows the onsite emissions from the CalEEMod model from the use of either 14-cubic yard haul trucks or 18-cubic yard haul trucks and the calculated emissions thresholds.

Table J – Screening of the Local Construction Emissions at the Nearest Receptors

Activity	Pollutant Emissions (pounds/day)			
	NOx	**CO**	**PM10**	**PM2.5**
Onsite Construction Equipment	59.97	40.93	8.31	5.39
Onsite 14 Cubic Yard Haul Trucks	0.60	0.71	0.60	0.11
Onsite Dirt Roads With 14 Cubic Yard Haul Trucks[1]	0.00	0.00	24.17	3.80
Onsite 18 Cubic Yard Haul Trucks	0.75	1.35	0.51	0.10
Onsite Dirt Roads With 18 Cubic Yard Haul Trucks[1]	0.00	0.00	20.86	3.92
Worst-Case Total Emissions	**60.72**	**42.28**	**33.08**	**9.41**
SCAQMD Thresholds for 25 meters (82 feet) or less[2]	172	1,434	14	8
Exceeds Threshold?	No	No	**Yes**	**Yes**

Notes:
[1] The onsite dirt road emissions were calculated by running the CalEEMod twice, once with 100% paved roads and then with 97.8% paved roads and then taking the difference to obtain the onsite emissions.
[2] The nearest sensitive receptors are detailed above in Section 1.4 and are as close as 30 feet to the proposed improvements. According to LST methodology any receptor closer than 25 meters should be based on the 25-meter threshold.
Source: CalEEMod and SCAQMD's Mass Rate Look-up Tables for five acres in East San Fernando Valley.

The screening data provided in Table J shows that NOx and CO emissions would not exceed the local emissions thresholds. Table J also shows that the fugitive dust emissions (PM10 and PM2.5) may exceed the local emissions thresholds during construction activities. It should be noted that an exceedance of screening threshold only means that additional localized dispersion analysis is necessary and does not represent an occurrence of a localized significant impact.

The PM10 and PM2.5 24-hour average concentration levels at the nearby sensitive receptors were calculated with AERMOD view and the same parameters detailed above in Section 5.2 for the TAC emissions analysis except that the emission source was changed to an area source that covered a majority of the project site (154 acres or 623,862 square meters). The area source for PM10 emissions was based on an emission rate of 5.567E-07 grams per second that was calculated by converting the onsite 33.08 pounds of PM10 per day to grams per second over a 12-hour period and then dividing by 623,862 square meters. The area source for PM2.5 emissions was based on an emission rate of 2.242E-07 grams per second that was calculated by converting the onsite 13.32 pounds of PM2.5 per day to grams per second over a 12-hour period and then dividing by 623,862 square meters. Table K provides a summary of the calculated PM10 and PM2.5 onsite construction emission concentrations at the nearest sensitive receptors. The onsite PM10 emissions calculations printouts are provided in Appendix D and the PM2.5 emissions calculation printouts are provided in Appendix E.

Table K – Local PM10 and PM2.5 Concentrations at Nearby Receptors

Sensitive Receptor	Receptor Description	Receptor Location[1] X	Receptor Location[1] Y	24-hour Concentrations (µg/m³) PM10	24-hour Concentrations (µg/m³) PM2.5
1	SFR – NW of Intake Structure	367,030	3,792,240	2.24	0.90
2	SFR – N of Spreading Grounds	366,644	3,792,082	3.37	1.36
3	SFR – NW of Spreading Grounds	366,494	3,791,913	3.51	1.41
4	SFR – W of Spreading Grounds	366,294	3,791,729	3.51	1.41
5	Park – W of Spreading Grounds	366,214	3,791,536	3.37	1.36
6	SFR – SW of Spreading Grounds	366,272	3,791,136	2.28	0.92
7	SFR – SE of Spreading Grounds	366,526	3,790,962	1.99	0.80
8	SFR – E of Spreading Grounds	367,107	3,791,450	3.62	1.46
9	SFR – E of Spreading Grounds	367,095	3,791,634	4.40	1.77
10	SFR – SE of Paxton Street	367,081	3,791,995	3.07	1.24
11	MFR – SE of Paxton Street	367,267	3,792,154	1.73	0.70
			Threshold of Significance[2]	10.4	10.4
			Exceeds Threshold?	No	No

Notes:
[1] Receptor location based on World Geodetic System 1984 (WGS84), Universal Transverse Mercator (UTM).
[2] Threshold of significance from http://www.aqmd.gov/docs/default-source/ceqa/handbook/scaqmd-air-quality-significance-thresholds.pdf?sfvrsn=2
Source: Calculated from ISC-AERMOD View Version 8.9.0.

The data provided in Table K shows that the local PM10 and PM2.5 concentrations at the nearby sensitive receptors would be below the SCAQMD's local threshold of significance of 10.4 µg/m^3 for PM10 and PM2.5 concentrations from construction activities. Therefore, a less than significant local air quality impact would occur from construction of the proposed project.

Construction-Related Toxic Air Contaminant Impacts

The proposed project would consist of intake structure improvements, removal of sediment and reconfiguration of the spreading basins. The proposed improvements would require the use of diesel powered off-road equipment as well as diesel powered haul trucks that would result in the emissions of diesel particulate matter (DPM), which is a TAC. The proposed project's construction-related impacts from DPM to the nearby sensitive receptors has been analyzed through use of the AERMOD model and the model input parameters that have been detailed above in Section 5.2.

Health risks from TACs are twofold. First, TACs are carcinogens according to the State of California. Second, short-term acute and long-term chronic exposure to TACs can cause health effects to the respiratory system and other organs. Each of these health risks is discussed below.

Cancer Risks

It is often estimated that the incidence in cancer over a lifetime for the U.S. population will affect 25 percent of all persons, or a risk of about 250,000 per million persons. The MATES-III study referenced a Harvard Report on Cancer Prevention, which estimated that of cancers associated with known risk factors, about 30 percent were related to tobacco, about 30 percent were related to diet and obesity, and about 2 percent were associated with environmental pollution related exposures that includes hazardous air pollutants.

According to SCAQMD methodology, health effects from carcinogenic air toxics are usually described in terms of individual cancer risk. "Individual Cancer Risk" is the likelihood that a person exposed to concentrations of toxic air contaminants over a 70-year lifetime will contract cancer, based on the use of standard risk-assessment methodology. According to the in Health Risk Assessment for Proposed Land Use Projects, prepared by CAPCOA, July 2009, the cancer risk should be calculated using the following formula. (It should be noted that the CAPCOA formula only provides for residential and off-site worker receptors, since it is possible for people to work at the school, hospital and park, these land uses have also utilized the off-site worker rates).

[Dose-inh (mg/(Kg-day)] * [Oral Slope Factor (kg-day)/mg]*[$1x10^6$] = Potential Cancer Risk

Where:
Oral Slope Factor = 1.1
Dose-inh = (C_{air} * DBR * A * EF * ED * 10^6) / AT

Where:

C_{air}	[Concentration in air ($\mu g/m^3$)] = (Calculated by AERMOD Model)
DBR	[Daily breathing rate (L/kg body weight – day)] = 302 for residential, 149 for off-site worker, school, hospital, and park uses.
A	[Inhalation absorption factor] = 1
EF	[Exposure frequency (days/year)] = 350 for residential and 245 for off-site worker, school, hospital, and park uses
ED	[Exposure duration (years)] = 70 for residential and 40 for offsite worker, school, hospital, and park uses.
10^6	[Micrograms to milligrams conversion]
AT	[Average time period over which exposure is averaged in days] = 25,550

According to the CAPCOA formula the residential receptors equates to C_{air} * 318.5 = Potential Cancer Risk and the offsite worker, school, hospital, and park area receptors equates to C_{air} * 62.9 = Potential Cancer Risk. Since the construction activities are only anticipated to last 18 months, the residential cancer risks were multiplied by 1.5/70 = 0.0214 and the offsite worker, school, hospital and park cancer risks were multiplied by 1.5/40 = 0.0375 in order to account for the limited duration of the proposed project. The model run PM10 results are shown below in Figure 5 on page 49 and Appendix F for the Spreading Ground area and in Figure 6 on page 50 and Appendix G for the pits area. Table L provides a summary of the calculated diesel PM10 emission concentrations at the nearest sensitive receptors.

Table L shows that construction activities associated with the proposed project would create the highest concentration of DPM at Sensitive Receptor 1, which is at a representative home located northwest of the intake structure improvements and would experience an annual PM10 concentration of 0.1341 µg per m^3 and a cancer risk of 0.9 per million people. It should be noted that the analysis assumed that construction of the intake structures would take the entire anticipated 18 month duration of construction for the proposed project, however this portion of the proposed project would likely take less time and would result in a lower cancer risk to the nearby homes. All calculated cancer risks from TAC emissions were found to be below the 10.0 in one million cancer risk threshold that has been discussed above in Section 6.3. Therefore, no significant long-term health impacts would occur from the operation of diesel trucks and equipment during construction of the proposed project.

Table L – Diesel PM10 Levels and Cancer Risks

Sensitive Receptor	Receptor Description	Receptor Location[1] X	Receptor Location[1] Y	Annual PM10 Concentration (µg/m³)	Cancer Risk Per Million People[1]
Spreading Grounds Area					
1	SFR – NW of Intake Structure	367,030	3,792,240	0.1341	0.9
2	SFR – N of Spreading Grounds	366,644	3,792,082	0.0856	0.6
3	SFR – NW of Spreading Grounds	366,494	3,791,913	0.0536	0.4
4	SFR – W of Spreading Grounds	366,294	3,791,729	0.0650	0.4
5	Park – W of Spreading Grounds	366,214	3,791,536	0.0727	0.2
6	SFR – SW of Spreading Grounds	366,272	3,791,136	0.0406	0.3
7	SFR – SE of Spreading Grounds	366,526	3,790,962	0.0671	0.5
8	SFR – E of Spreading Grounds	367,107	3,791,450	0.0739	0.5
9	SFR – E of Spreading Grounds	367,095	3,791,634	0.0683	0.5
10	SFR – SE of Paxton Street	367,081	3,791,995	0.0405	0.3
11	MFR – SE of Paxton Street	367,267	3,792,154	0.0256	0.2
Pits Area					
12	Hospital – W of San Fernando Rd	371,616	3,789,567	0.0001	0.0
13	MFR – SE of El Dorado Ave	371,489	3,789,404	0.0000	0.0
14	SFR – W of Tamarack Ave	371,383	3,789,358	0.0001	0.0
15	School – SE of Cayuga Ave	371,258	3,789,220	0.0000	0.0
16	SFR – W of Oneida Ave	371,084	3,789,095	0.0000	0.0
17	SFR – SW of Haddon Ave	371,013	3,789,012	0.0000	0.0
18	SFR – NE of Rincon Ave	370,795	3,788,858	0.0000	0.0
19	Park – W of Laurel Canyon Blvd	370,889	3,788,529	0.0001	0.0
				Threshold of Significance	**10**
				Exceeds Threshold?	**No**

Notes:
[1] Receptor location based on World Geodetic System 1984 (WGS84), Universal Transverse Mercator (UTM).
[2] Cancer risk based on a residential receptor cancer risk = 318.5 x Cair; off-site worker, school, church and park cancer risk = 62.9 x Cair.
Source: Calculated from ISC-AERMOD View Versions 8.7.0 and 8.9.0.

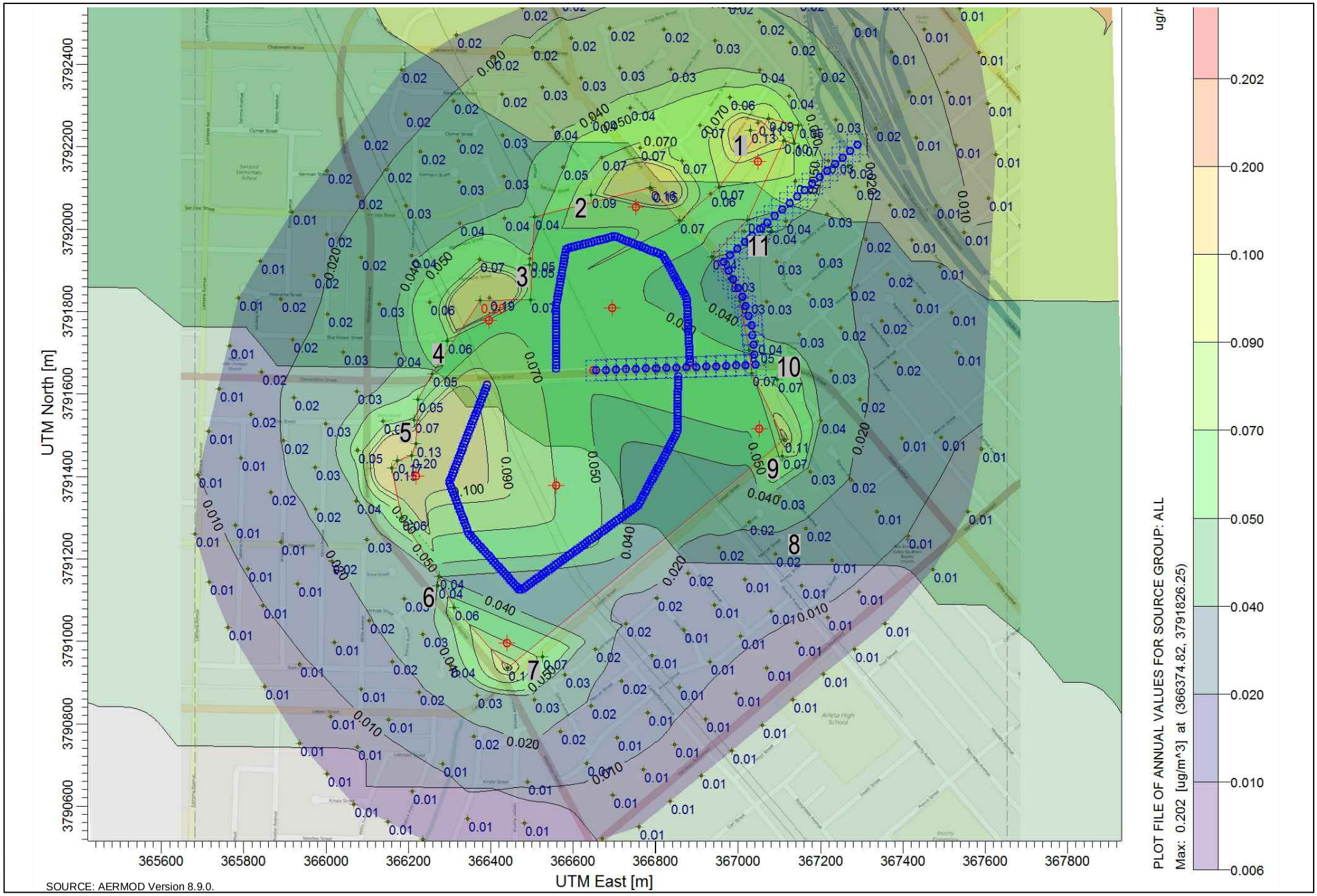

N

VISTA ENVIRONMENTAL

Figure 5

Modeled Spreading Grounds Area Diesel PM10 Concentrations

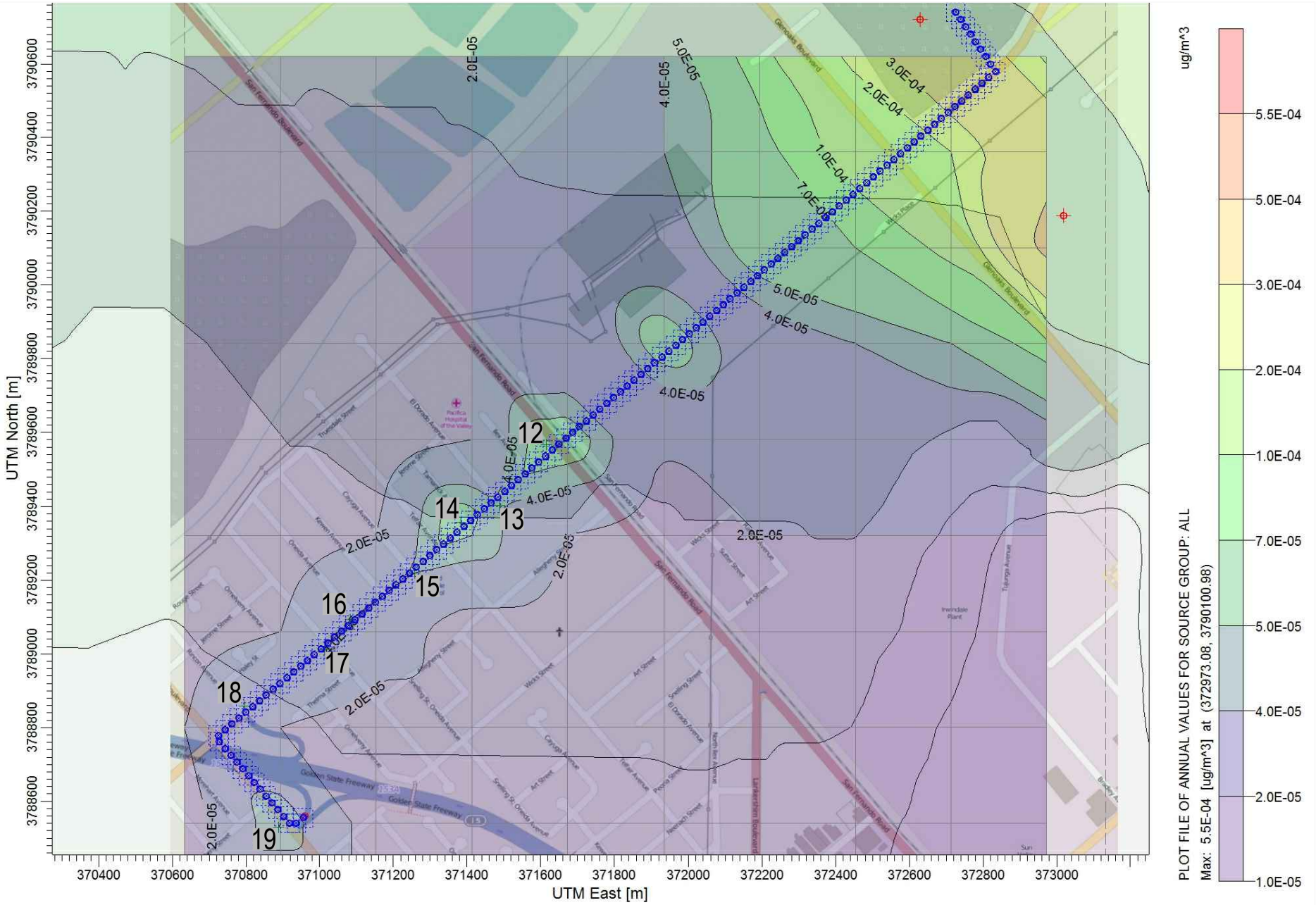

SOURCE: AERMOD Version 8.7.0.

N

VISTA ENVIRONMENTAL

Figure 6
Modeled Pits Area Diesel PM10 Concentrations

Non-Cancer Risks

In addition to the cancer risk from exposure to DPM there is also the potential DPM exposure may result in adverse health impacts from acute and chronic illnesses, which are detailed below.

Chronic Health Impacts

Chronic health effects are characterized by prolonged or repeated exposure to a TAC over many days, months, or years. Symptoms from chronic health impacts may not be immediately apparent and are often irreversible. The chronic hazard index is based on the most impacted sensitive receptor from the proposed project and is calculated from the annual average concentrations of PM10. The relationship for non-cancer chronic health effects is given by the equation:

$$HI_{DPM} = C_{DPM} / REL_{DPM}$$

Where,

HI_{DPM} = Hazard Index; an expression of the potential for non-cancer health effects.

C_{DPM} = Annual average diesel particulate matter concentration in $\mu g/m^3$.

REL_{DPM}= Reference Exposure Level (REL) for diesel particulate matter; the diesel particulate matter concentration at which no adverse health effects are anticipated.

The REL_{DPM} is 5 $\mu g/m^3$. The Office of Environmental Health Hazard Assessment as protective for the respiratory system has established this concentration. As detailed above in Table L, the AERMOD model found that the highest annual concentration at the nearest sensitive receptor is 0.1341 $\mu g/m^3$ for DPM equivalent chronic non-cancer risk emissions. The resulting Hazard Index is:

$$HI_{DPM} = 0.1341 / 5 = 0.027$$

The criterion for significance is a Chronic Hazard Index increase of 1.0 or greater, which is detailed above in Section 3.0. Therefore, the on-going operations of the proposed project would result in a less than significant impact due to the non-cancer chronic health risk from TAC emissions created by the proposed project.

Acute Health Impacts

Acute health effects are characterized by sudden and severe exposure and rapid absorption of a TAC. Normally, a single large exposure is involved. Acute health effects are often treatable and reversible. The acute hazard index is calculated from the maximum hourly concentrations of PM10 and TOG at the point of maximum impact (PMI), which has been calculated with the AERMOD model and the parameters detailed above in Section 4.0. The relationship for non-cancer acute health effects is given by the equation:

$$AHI = C / AREL$$

Where,

AHI = Acute Hazard Index; an expression of the potential for non-cancer health effects.

C = Maximum hourly concentration of either PM10 or TOG in $\mu g/m^3$.

AREL = Acute Reference Exposure Level.

The AERMOD model found that the proposed project would create maximum hourly concentrations of 1.725 $\mu g/m^3$ of PM10 at the PMI for the spreading grounds area and 0.010 $\mu g/m^3$ of PM10 at the PMI for the pits area. The AERMOD model also calculated maximum hourly concentrations of 3.554 $\mu g/m^3$ of TOG at the PMI for the spreading grounds area and 0.747 $\mu g/m^3$ of TOG at the PMI for the pits area. Appendices E and F provides the AERMOD output files for the PM10 calculations and Appendices G and H provides the AERMOD output files for the TOG calculations. Table M provides a list of TAC pollutants from diesel emissions that have the potential to cause acute health risks, the associated pollutant analyzed

in the AERMOD model, the ratio of the pollutant to total diesel emissions, the AREL for each pollutant and the calculated Acute Hazard Index for each pollutant.

Table M – Acute Non-Cancer Assessment

TAC from Diesel Emissions	Pollutant	Diesel Weight Ratio[1]	Acute Reference Exposure Level (AREL)[2] µg/m^3	Acute Hazard Index (AHI)
Acetaldehyde	TOG	0.0735	470	5.56E-04
Acrolein	TOG	0.003	25	4.27E-04
Arsenic	PM	0.000002	0.2	1.72E-05
Benzene	TOG	0.02	1,300	5.47E-05
Chlorine	PM	0.00003	210	2.46E-07
Copper	PM	0.00006	100	1.03E-06
Formaldehyde	TOG	0.1471	55	9.51E-03
Mercury	PM	0.000006	0.6	1.72E-05
Methanol	TOG	0.0408	28,000	5.18E-06
Methyl Ethyl Ketone	TOG	0.0148	13,000	4.05E-06
Nickel	PM	0.000008	6	2.30E-06
Styrene	TOG	0.0006	21,000	1.02E-07
Toluene	TOG	0.0147	37,000	1.41E-06
Vanadium	PM	0.001	30	5.75E-05
Xylene	TOG	0.0104	22,000	1.68E-06
			Total	**1.07E-02 (0.0107)**
			Threshold	**1.00E-00 (1.0)**
			Exceeds Threshold?	**No**

Notes:
[1] Diesel related TAC composition is based on the ARB speciation profile 6099 for PM and 818 for VOC.
[2] Acute REL is from http://oehha.ca.gov/air/allrels.html.

Table M shows that the total acute hazard index from the proposed project would be 0.0107. The criterion for significance is an Acute Hazard Index increase of 1.0 or greater, which is detailed above in Section 3.0. Therefore, the construction activities for the proposed project would result in a less than significant impact due to the non-cancer acute health risk from TAC emissions created by the proposed project.

Operational Emissions

The on-going operation of the proposed project would not result in a long-term increase in air quality emissions. Currently, the project site requires occasional periodic visits from LACFCD staff and result in air emissions from the vehicle transporting the workers to and from the project site. Implementation of the proposed project would not result in any additional site visits from LACFCD staff. Therefore, implementation of the proposed project would not increase either criteria pollutant or TAC emissions from the proposed project and would result in a less than significant impact.

Level of Significance

Less than significant impact.

7.4 Cumulative Net Increase in Non-Attainment Pollution

The proposed project would not result in a cumulatively considerable net increase of any criteria pollutant for which the project region is non-attainment under an applicable Federal or State ambient air quality standard (including releasing emissions which exceed quantitative thresholds for ozone precursors).

Cumulative projects include local development as well as general growth within the project area. However, as with most development, the greatest source of emissions is from mobile sources, which travel throughout the local area. Therefore, from an air quality standpoint, the cumulative analysis would extend beyond any local projects and when wind patterns are considered would cover an even larger area. Accordingly, the cumulative analysis for the project's air quality must be generic by nature. The project area is out of attainment for ozone and PM10 (State only) and PM2.5 particulate matter. In accordance with CEQA Guidelines Section 15130(b), this analysis of cumulative impacts incorporates a three-tiered approach to assess cumulative air quality impacts.

- Consistency with the SCAQMD project specific thresholds for construction and operations;
- Project consistency with existing air quality plans; and
- Assessment of the cumulative health effects of the pollutants.

Consistency with Project Specific Thresholds

Construction-Related Impacts

The project site is located in the South Coast Air Basin, which is currently designated as a non-attainment area for ozone, PM10, and PM2.5. The ozone, PM10, and PM2.5 emissions associated with the proposed project have been calculated above in Section 6.3. The above analysis found that development of the proposed project would result in less than significant regional and local emissions of the precursors to ozone, PM10 and PM2.5 during construction of the proposed project. Therefore, a less than significant cumulative impact would occur from construction of the proposed project.

Operational-Related Impacts

As detailed in Section 7.3, the project site currently requires occasional periodic visits from LACFCD staff and result in air emissions from the vehicle transporting the workers to and from the project site. Implementation of the proposed project would not result in any additional site visits from LACFCD staff. Therefore, a less than significant cumulative impact would occur from operation of the proposed project.

Consistency with Air Quality Plans

As detailed in Section 7.2, the project site is currently designated as Open Space in the General Plan and is also zoned Open Space (OS-1XL-O). The proposed project would not change the current use as a spreading ground and is consistent with the current land use designation and zoning. Therefore, the proposed project would not result in an inconsistency with the current land use designation. Therefore, the proposed project is not anticipated to exceed the AQMP assumptions for the project site and is found to be consistent with the AQMPs for the South Coast Air Basin.

Cumulative Health Impacts

The South Coast Air Basin is designated as nonattainment for ozone, PM10, and PM2.5, which means that the background levels of those pollutants are at times higher than the ambient air quality standards. The air quality standards were set to protect public health, including the health of sensitive individuals (elderly, children, and the sick). Therefore, when the concentrations of those pollutants exceeds the standard, it is likely that some sensitive individuals in the population would experience health effects. The regional analysis detailed in Section 7.3 found that the proposed project would not exceed the SCAQMD regional

significance thresholds for VOC and NOx (ozone precursors), PM10 and PM2.5. Therefore, the proposed project would result in a less than significant cumulative health impact.

Level of Significance

Less than significant impact.

7.5 Sensitive Receptors

The proposed project would not expose sensitive receptors to substantial pollutant concentrations. The local concentrations of emissions produced in the nearby vicinity of the proposed project, which may expose sensitive receptors to substantial concentrations have been calculated in Section 6.3 for both construction and operations, which are discussed separately below.

Construction-Related Sensitive Receptor Impacts

The nearest off-site sensitive receptors to the spreading basins consist of multi-family homes as near as 35 feet southwest of the proposed improvements to the spreading grounds, single-family homes as near as 40 feet north and west of the proposed improvements to the spreading grounds, and Devonwood Park located as near as 30 feet west of the proposed improvements to the spreading grounds. There are also single-family homes as near as 50 feet north of the intake canal improvements and single-family and multi-family homes as near as 25 feet from where haul trucks would operate on the nearby roads.

The nearest sensitive receptors to the haul route from Interstate 5 to the Sheldon and Cal-Mat Pits consist of single-family and multi-family homes located as near as 20 feet from the travel lanes of Sheldon Street and 25 feet from the nearest structures at Sun Valley High School.

The analysis in Section 7.3 found that construction of the proposed project would not exceed the local NOx, CO, PM10 and PM2.5 thresholds of significance discussed in Section 6.2. Therefore, construction of the proposed project would result in a less than significant exposure of sensitive receptors to substantial pollutant concentrations.

Operations-Related Sensitive Receptor Impacts

The on-going operations of the proposed project would not expose sensitive receptors to substantial pollutant concentrations in the immediate vicinity of the proposed project from on-site operations. As detailed in Section 7.3, the project site currently requires occasional periodic visits from LACFCD staff and result in air emissions from the vehicle transporting the workers to and from the project site. Implementation of the proposed project would not result in any additional site visits from LACFCD staff. Therefore, operation of the proposed project would result in a less than significant exposure of sensitive receptors to substantial pollutant concentrations.

Level of Significance

Less than significant impact.

7.6 Objectionable Odors

The proposed project would not create objectionable odors affecting a substantial number of people. Potential odor impacts have been analyzed separately for construction and operations below.

Individual responses to odors are highly variable and can result in a variety of effects. Generally, the impact of an odor results from a variety of factors such as frequency, duration, offensiveness, location, and sensory perception. The frequency is a measure of how often an individual is exposed to an odor in the ambient

environment. The intensity refers to an individual's or group's perception of the odor strength or concentration. The duration of an odor refers to the elapsed time over which an odor is experienced. The offensiveness of the odor is the subjective rating of the pleasantness or unpleasantness of an odor. The location accounts for the type of area in which a potentially affected person lives, works, or visits; the type of activity in which he or she is engaged; and the sensitivity of the impacted receptor.

Sensory perception has four major components: detectability, intensity, character, and hedonic tone. The detection (or threshold) of an odor is based on a panel of responses to the odor. There are two types of thresholds: the odor detection threshold and the recognition threshold. The detection threshold is the lowest concentration of an odor that will elicit a response in a percentage of the people that live and work in the immediate vicinity of the project site and is typically presented as the mean (or 50 percent of the population). The recognition threshold is the minimum concentration that is recognized as having a characteristic odor quality, this is typically represented by recognition by 50 percent of the population. The intensity refers to the perceived strength of the odor. The odor character is what the substance smells like. The hedonic tone is a judgment of the pleasantness or unpleasantness of the odor. The hedonic tone varies in subjective experience, frequency, odor character, odor intensity, and duration.

The SCAQMD receives and investigates odor complaints from nearby residents and if six or more odor events are reported in a year the SCAQMD will consider the odor impact a nuisance and has the authority to require the offender to implement measures to reduce the odor impacts. If the proposed project results in a violation of Rule 402 with regards to odor impacts, then the proposed project would create a significant odor impact.

Construction-Related Odor Impacts

Potential sources that may emit odors during construction activities include the application of materials such as asphalt pavement, from emissions associated with the operation of diesel equipment, and possibly from disturbing decaying organic material during earthmoving activities. The diesel equipment utilized onsite would be constantly moving around the project site and any odors created from diesel equipment would be temporary at any one location and would not likely be noticeable for extended periods of time beyond the project site's boundaries. In addition, the application of materials such as asphalt pavement would be installed over a couple of days for any one location and would result in temporary odor impacts that would not likely be noticeable for extended periods of time beyond the project site's boundaries.

The potential odor impacts associated with excavation activities would be caused by release of material that contain even small amounts of sulfur or organic material. Sulfur compounds have very low odor threshold levels. For instance hydrogen sulfide can be detected by humans at concentrations from 0.5 parts per billion (ppb) that is noticeable by 2 percent of the population, to 40 ppb that is qualified as annoying by 50 percent of the population. It should be noted that the project site has been utilized as spreading grounds since the 1930's and vegetation has been removed from the spreading grounds on regular intervals for the entire duration of operations, so the amount of organic material in the soil should be minimal. Furthermore, soil in the project vicinity is not known to contain high levels of sulfur so odor impacts from sulfur in the soil is unlikely to occur. Therefore, a less than significant odor impact is anticipated to occur from construction activities associated with the proposed project.

Potential Operations-Related Odor Impacts

The proposed project would consist of intake structure improvements, removal of sediment and reconfiguration of the spreading basins. The proposed project would not introduce any new sources of odors to the project site, nor would it reconfigure any existing sources of odors on the project site. Impacts would be less than significant.

Level of Significance

Less than significant impact.

7.7 Generation of Greenhouse Gas Emissions

The proposed project would not generate GHG emissions, either directly or indirectly, that may have a significant impact on the environment. The proposed project would consist of intake structure improvements, removal of sediment and reconfiguration of the spreading basins. The proposed project is anticipated to generate GHG emissions only from construction activities.

The CalEEMod Version 2013.2.2 was used to calculate the GHG emissions from construction activities associated with the proposed project. The GHG emissions analysis utilized the same CalEEMod model inputs as what was used for the criteria pollutant analysis and the CalEEMod input parameters are detailed in Section 5.1.

Project Greenhouse Gas Emissions

The project's GHG emissions have been calculated with CalEEMod model based on the parameters detailed above. A summary of the results for the worst-case year of activities from the use of either 14-cubic yard haul trucks or 18-cubic yard haul trucks are shown below in Table N and CalEEMod model run for the 14-cubic yard haul trucks analysis is provided in Appendix J and for the 18-cubic yard haul trucks analysis is provided in Appendix K.

Table N – Project Related Greenhouse Gas Annual Emissions

	Greenhouse Gas Emissions (Metric Tons per Year)					
Construction Activities	**Bio-CO_2**	**NonBio-CO_2**	**Total CO_2**	**CH_4**	**N_2O**	**CO_2e**
Onsite Equipment Emissions	0.00	691.79	691.79	0.19	0.00	**695.86**
Worker Trips	0.00	42.18	42.18	0.00	0.00	**42.23**
Demolition Haul Trucks	0.00	0.61	0.61	0.00	0.00	**0.61**
14 Cubic Yard Haul Trucks[1]	0.00	946.84	946.84	0.01	0.00	**946.97**
18 Cubic Yard Haul Trucks[2]	0.00	1,135.22	1,135.22	0.01	0.00	**1,135.43**
Worst-Case Total GHG Emissions[3]	0.00	1,869.80	1,869.80	0.20	0.00	**1,874.13**
			SCAQMD Draft Threshold of Significance			**3,000**
				Exceed Threshold?		**No**

Notes:
[1] Based on 480 Medium-Heavy Duty (T6) truck trips per day.
[2] Based on 360 Heavy-Heavy Duty (T7) truck trips per day.
[3] Based on highest of either the 14-cubic yard haul trucks or 18-cubic yard haul trucks for each pollutant.
Source: CalEEMod Version 2013.2.2.

The data provided in Table N above shows that the proposed project would create 1,874.13 $MTCO_2e$ for the worst-case construction year. According to the SCAQMD draft threshold of significance detailed in Section 5.5, a cumulative global climate change impact would occur if the GHG emissions created from a proposed project would exceed 3,000 $MTCO_2e$ per year. Therefore, a less than significant generation of greenhouse gas emissions would occur from development of the proposed project.

Level of Significance

Less than significant impact.

7.8 Greenhouse Gas Plan Consistency

The proposed project would not conflict with any applicable plan, policy or regulation of an agency adopted for the purpose of reducing GHG emissions. The City of Los Angeles has adopted the *Green LA Climate Change Action Plan* (Climate Action Plan). The Climate Action Plan details Action W3, which requires the City to implement an innovative water and wastewater integrated resources plan that will maximize use of recycled water including capture and reuse of stormwater. The proposed project would increase the water holding capacity of the spreading grounds from 530 acre-feet to 1,197 acre-feet by combining and deepening the existing 12 spreading basins. The proposed project would also increase the percolation rate of the spreading basins from 65 cubic feet per second to 142 cubic feet per second, which will also allow for the capture of more stormwater. Based on the above, the proposed project promotes the implementation of the Actions in the Climate Action Plan. Therefore, the proposed project would not conflict with any applicable plan, policy or regulation of an agency adopted for the purpose of reducing the emissions of greenhouse gases.

Level of Significance

Less than significant impact.

8.0 REFERENCES

California Air Resources Board, *Appendix VII Risk Characterization Scenarios,* October 2000.

California Air Resources Board, *The California Almanac of Emissions and Air Quality 2013 Edition*.

California Air Resources Board, *Resolution 08-43,* December 12, 2008.

California Air Resources Board, *Recommended Approaches for Setting Interim Significance Thresholds for Greenhouse Gases under the California Environmental Quality Act,* on October 24, 2008.

California Department of Conservation, *A General Guide for Ultramafic Rocks in California – Areas More Likely to Contain Naturally Occurring Asbestos,* August, 2000.

California Department of Transportation (Caltrans), *2013 Annual Average Daily Truck Traffic on the California State Highway System*, 2014.

City of Los Angeles, *Green LA Climate Change Action Plan*.

Environmental Protection Agency, *Nonattainment Major New Source Review Implementation Under 8-Hour Ozone National Ambient Air Quality Standard: Reconsideration*, June 30, 2005.

Linscott Law & Greenspan, *Traffic Impact Study Pacoima Spreading Grounds Improvement Project,* June 10, 2014.

South Coast Air Quality Management District, *2007 Air Quality Management Plan,* June 1, 2007.

South Coast Air Quality Management District, *Appendix A Calculation Details for CalEEMod,* February 2011.

South Coast Air Quality Management District, *CEQA Air Quality Handbook, April 1993.*

South Coast Air Quality Management District, *Final 2012 Air Quality Management Plan,* December, 2012.

South Coast Air Quality Management District, *Final Localized Significance Threshold Methodology*, Revised July 2008.

South Coast Air Quality Management District, *Revised Draft – 2012 Lead State Implementation Plan Los Angeles County,* May 4, 2012.

South Coast Air Quality Management District, *Rule 402 Nuisance,* Adopted May 7, 1976.

South Coast Air Quality Management District, *Rule 403 Fugitive Dust,* Amended June 3, 2005.

South Coast Air Quality Management District, *Draft Report Multiple Air Toxics Exposure Study in the South Coast Air Basin, MATES III*, January 2008.

Southern California Association of Governments, *2012-2035 Regional Transportation Plan/Sustainable Communities Strategy*, April 2012.

U.S. Geological Survey, *Reported Historic Asbestos Mines, Historic Asbestos Prospects, and Other Natural Occurrences of Asbestos in California,* 2011.

APPENDIX A

14-Cubic Yard Haul Trucks Alternative CalEEMod Model Daily Printouts

Pacoima Spreading Grounds Improvement Project with 14 CY Trucks

Los Angeles-South Coast County, Summer

1.0 Project Characteristics

1.1 Land Usage

Land Uses	Size	Metric	Lot Acreage	Floor Surface Area	Population
User Defined Industrial	169.00	User Defined Unit	169.00	0.00	0

1.2 Other Project Characteristics

Urbanization	Urban	**Wind Speed (m/s)**	2.2	**Precipitation Freq (Days)**	33
Climate Zone	12			**Operational Year**	2016
Utility Company	Los Angeles Department of Water & Power				
CO2 Intensity (lb/MWhr)	1227.89	**CH4 Intensity (lb/MWhr)**	0.029	**N2O Intensity (lb/MWhr)**	0.006

1.3 User Entered Comments & Non-Default Data

Project Characteristics -

Land Use - 169 acres of User Defined Industrial

Construction Phase - Construction was modelled as occurring from 3-1-16 to 9-1-17

Off-road Equipment - 2 Excavators (8 hrs each), 2 rubber tired dozers (8 hrs each), 1 sediment shaker (Crushing/Proc Equip) (8 hrs), 3 water trucks (Off-Hwy Trucks) (4 hrs each), 1 street sweeper (4 hrs)

Trips and VMT - 18 worker trips per TIA. 77 haul trips of concrete debris to Sunshine Cyn Landfill 8 miles length

On-road Fugitive Dust - Demo Haul Trip Length 8 miles of which 1/8 mile on dirt roads or 98.4% of haul trip length on paved roads. Per SCAQMD Rule 403 Road Moisture 12%

Grading - 775 acres disturbed (default). 614 cubic yards of concrete removed.

Vehicle Trips - 480 haul truck trips or 2.84 trips per acre. 100% Primary Trips. Non Res C-C 100% and 5.7 miles.

Vechicle Emission Factors - Fleet Mix 100% MHD

Vechicle Emission Factors - Fleet Mix 100% MHD

Vechicle Emission Factors - Fleet Mix 100% MHD

Road Dust - 1/8 mile of 5.7 mile Haul Truck trips on dirt road or 97.8% of trips on paved roads avg weight 15 tons. Per SCAQMD Rule 403 Unpaved Road Moisture Content 12% and Mean Speed 15 mph.

Construction Off-road Equipment Mitigation - Water Exposed Areas 3 times per day and maintain Unpaved Roads at 12% moisture, per SCAQMD Rule 403 requirements

Table Name	Column Name	Default Value	New Value
tblConstructionPhase	NumDays	310.00	472.00
tblConstructionPhase	NumDaysWeek	5.00	6.00
tblGrading	AcresOfGrading	0.00	775.00
tblGrading	MaterialExported	0.00	614.00
tblLandUse	LotAcreage	0.00	169.00
tblOffRoadEquipment	OffRoadEquipmentUnitAmount	1.00	2.00
tblOnRoadDust	HaulingPercentPave	100.00	98.40
tblOnRoadDust	MaterialMoistureContent	0.50	12.00
tblProjectCharacteristics	OperationalYear	2014	2016
tblRoadDust	MaterialMoistureContent	0.5	12
tblRoadDust	MeanVehicleSpeed	40	15

tblRoadDust	MobileAverageVehicleWeight	2.4	15
tblRoadDust	RoadPercentPave	100	97.8
tblTripsAndVMT	HaulingTripLength	20.00	8.00
tblTripsAndVMT	WorkerTripNumber	23.00	30.00
tblVehicleEF	HHD	0.03	0.00
tblVehicleEF	HHD	0.03	0.00
tblVehicleEF	HHD	0.03	0.00
tblVehicleEF	LDA	0.53	0.00
tblVehicleEF	LDA	0.53	0.00
tblVehicleEF	LDA	0.53	0.00
tblVehicleEF	LDT1	0.06	0.00
tblVehicleEF	LDT1	0.06	0.00
tblVehicleEF	LDT1	0.06	0.00
tblVehicleEF	LDT2	0.18	0.00
tblVehicleEF	LDT2	0.18	0.00
tblVehicleEF	LDT2	0.18	0.00
tblVehicleEF	LHD1	0.04	0.00
tblVehicleEF	LHD1	0.04	0.00
tblVehicleEF	LHD1	0.04	0.00
tblVehicleEF	LHD2	6.2830e-003	0.00
tblVehicleEF	LHD2	6.2830e-003	0.00
tblVehicleEF	LHD2	6.2830e-003	0.00
tblVehicleEF	MCY	3.6910e-003	0.00
tblVehicleEF	MCY	3.6910e-003	0.00
tblVehicleEF	MCY	3.6910e-003	0.00
tblVehicleEF	MDV	0.13	0.00
tblVehicleEF	MDV	0.13	0.00
tblVehicleEF	MDV	0.13	0.00

tblVehicleEF	MH	1.6550e-003	0.00
tblVehicleEF	MH	1.6550e-003	0.00
tblVehicleEF	MH	1.6550e-003	0.00
tblVehicleEF	MHD	0.02	1.00
tblVehicleEF	MHD	0.02	1.00
tblVehicleEF	MHD	0.02	1.00
tblVehicleEF	OBUS	2.4530e-003	0.00
tblVehicleEF	OBUS	2.4530e-003	0.00
tblVehicleEF	OBUS	2.4530e-003	0.00
tblVehicleEF	SBUS	5.4300e-004	0.00
tblVehicleEF	SBUS	5.4300e-004	0.00
tblVehicleEF	SBUS	5.4300e-004	0.00
tblVehicleEF	UBUS	3.1570e-003	0.00
tblVehicleEF	UBUS	3.1570e-003	0.00
tblVehicleEF	UBUS	3.1570e-003	0.00
tblVehicleTrips	CC_TL	8.40	5.70
tblVehicleTrips	CC_TTP	0.00	100.00
tblVehicleTrips	PR_TP	0.00	100.00
tblVehicleTrips	ST_TR	0.00	2.84
tblVehicleTrips	WD_TR	0.00	2.84

2.0 Emissions Summary

2.1 Overall Construction (Maximum Daily Emission)

Unmitigated Construction

	ROG	NOx	CO	SO2	Fugitive PM10	Exhaust PM10	PM10 Total	Fugitive PM2.5	Exhaust PM2.5	PM2.5 Total	Bio- CO2	NBio- CO2	Total CO2	CH4	N2O	CO2e
Year	lb/day										lb/day					
2016	5.8462	60.1601	43.0372	0.0608	14.1519	2.9357	17.0877	6.9008	2.7363	9.6371	0.0000	6,167.2711	6,167.2711	1.6432	0.0000	6,201.7781
2017	5.4784	55.8669	41.1339	0.0608	14.1599	2.6928	16.8527	6.9017	2.5083	9.4099	0.0000	6,073.3060	6,073.3060	1.6334	0.0000	6,107.6069
Total	**11.3246**	**116.0271**	**84.1711**	**0.1216**	**28.3118**	**5.6285**	**33.9404**	**13.8025**	**5.2446**	**19.0471**	**0.0000**	**12,240.5771**	**12,240.5771**	**3.2766**	**0.0000**	**12,309.3850**

Mitigated Construction

	ROG	NOx	CO	SO2	Fugitive PM10	Exhaust PM10	PM10 Total	Fugitive PM2.5	Exhaust PM2.5	PM2.5 Total	Bio- CO2	NBio- CO2	Total CO2	CH4	N2O	CO2e
Year	lb/day										lb/day					
2016	5.8462	60.1601	43.0372	0.0608	5.7427	2.9357	8.6785	2.7476	2.7363	5.4840	0.0000	6,167.2711	6,167.2711	1.6432	0.0000	6,201.7781
2017	5.4784	55.8669	41.1339	0.0608	5.7507	2.6928	8.4435	2.7485	2.5083	5.2567	0.0000	6,073.3060	6,073.3060	1.6334	0.0000	6,107.6069
Total	**11.3246**	**116.0271**	**84.1711**	**0.1216**	**11.4934**	**5.6285**	**17.1219**	**5.4961**	**5.2446**	**10.7407**	**0.0000**	**12,240.5771**	**12,240.5771**	**3.2766**	**0.0000**	**12,309.3850**

	ROG	NOx	CO	SO2	Fugitive PM10	Exhaust PM10	PM10 Total	Fugitive PM2.5	Exhaust PM2.5	PM2.5 Total	Bio- CO2	NBio-CO2	Total CO2	CH4	N20	CO2e
Percent Reduction	**0.00**	**0.00**	**0.00**	**0.00**	**59.40**	**0.00**	**49.55**	**60.18**	**0.00**	**43.61**	**0.00**	**0.00**	**0.00**	**0.00**	**0.00**	**0.00**

2.2 Overall Operational

Unmitigated Operational

	ROG	NOx	CO	SO2	Fugitive PM10	Exhaust PM10	PM10 Total	Fugitive PM2.5	Exhaust PM2.5	PM2.5 Total	Bio- CO2	NBio- CO2	Total CO2	CH4	N2O	CO2e
Category	lb/day										lb/day					
Area	1.7300e-003	1.7000e-004	0.0177	0.0000		6.0000e-005	6.0000e-005		6.0000e-005	6.0000e-005		0.0370	0.0370	1.0000e-004		0.0392
Energy	0.0000	0.0000	0.0000	0.0000		0.0000	0.0000		0.0000	0.0000		0.0000	0.0000	0.0000	0.0000	0.0000
Mobile	3.0394	27.0726	26.6770	0.0674	26.7212	0.5015	27.2227	4.5512	0.4611	5.0123		6,736.5467	6,736.5467	0.0397		6,737.3793
Total	**3.0411**	**27.0728**	**26.6947**	**0.0674**	**26.7212**	**0.5016**	**27.2227**	**4.5512**	**0.4612**	**5.0124**		**6,736.5837**	**6,736.5837**	**0.0398**	**0.0000**	**6,737.4184**

Mitigated Operational

	ROG	NOx	CO	SO2	Fugitive PM10	Exhaust PM10	PM10 Total	Fugitive PM2.5	Exhaust PM2.5	PM2.5 Total	Bio- CO2	NBio- CO2	Total CO2	CH4	N2O	CO2e
Category	lb/day										lb/day					
Area	1.7300e-003	1.7000e-004	0.0177	0.0000		6.0000e-005	6.0000e-005		6.0000e-005	6.0000e-005		0.0370	0.0370	1.0000e-004		0.0392
Energy	0.0000	0.0000	0.0000	0.0000		0.0000	0.0000		0.0000	0.0000		0.0000	0.0000	0.0000	0.0000	0.0000
Mobile	3.0394	27.0726	26.6770	0.0674	26.7212	0.5015	27.2227	4.5512	0.4611	5.0123		6,736.5467	6,736.5467	0.0397		6,737.3793
Total	**3.0411**	**27.0728**	**26.6947**	**0.0674**	**26.7212**	**0.5016**	**27.2227**	**4.5512**	**0.4612**	**5.0124**		**6,736.5837**	**6,736.5837**	**0.0398**	**0.0000**	**6,737.4184**

	ROG	NOx	CO	SO2	Fugitive PM10	Exhaust PM10	PM10 Total	Fugitive PM2.5	Exhaust PM2.5	PM2.5 Total	Bio- CO2	NBio-CO2	Total CO2	CH4	N20	CO2e
Percent Reduction	0.00	0.00	0.00	0.00	0.00	0.00	0.00	0.00	0.00	0.00	0.00	0.00	0.00	0.00	0.00	0.00

3.0 Construction Detail

Construction Phase

Phase Number	Phase Name	Phase Type	Start Date	End Date	Num Days Week	Num Days	Phase Description
1	Grading	Grading	3/1/2016	9/1/2017	6	472	

Acres of Grading (Site Preparation Phase): 0

Acres of Grading (Grading Phase): 775

Acres of Paving: 0

Residential Indoor: 0; Residential Outdoor: 0; Non-Residential Indoor: 0; Non-Residential Outdoor: 0 (Architectural Coating – sqft)

OffRoad Equipment

Phase Name	Offroad Equipment Type	Amount	Usage Hours	Horse Power	Load Factor
Grading	Crushing/Proc. Equipment	1	8.00	85	0.78
Grading	Excavators	2	8.00	162	0.38
Grading	Off-Highway Trucks	3	4.00	400	0.38
Grading	Rubber Tired Dozers	2	8.00	255	0.40
Grading	Sweepers/Scrubbers	1	4.00	64	0.46

Trips and VMT

Phase Name	Offroad Equipment Count	Worker Trip Number	Vendor Trip Number	Hauling Trip Number	Worker Trip Length	Vendor Trip Length	Hauling Trip Length	Worker Vehicle Class	Vendor Vehicle Class	Hauling Vehicle Class
Grading	9	30.00	0.00	77.00	14.70	6.90	8.00	LD_Mix	HDT_Mix	HHDT

3.1 Mitigation Measures Construction

Water Exposed Area

Water Unpaved Roads

3.2 Grading - 2016

Unmitigated Construction On-Site

	ROG	NOx	CO	SO2	Fugitive PM10	Exhaust PM10	PM10 Total	Fugitive PM2.5	Exhaust PM2.5	PM2.5 Total	Bio- CO2	NBio- CO2	Total CO2	CH4	N2O	CO2e
Category	lb/day										lb/day					
Fugitive Dust					13.7856	0.0000	13.7856	6.8085	0.0000	6.8085			0.0000			0.0000
Off-Road	5.7109	59.9717	40.9319	0.0564		2.9323	2.9323		2.7332	2.7332		5,793.4751	5,793.4751	1.6231		5,827.5597
Total	**5.7109**	**59.9717**	**40.9319**	**0.0564**	**13.7856**	**2.9323**	**16.7179**	**6.8085**	**2.7332**	**9.5417**		**5,793.4751**	**5,793.4751**	**1.6231**		**5,827.5597**

3.2 Grading - 2016

Unmitigated Construction Off-Site

	ROG	NOx	CO	SO2	Fugitive PM10	Exhaust PM10	PM10 Total	Fugitive PM2.5	Exhaust PM2.5	PM2.5 Total	Bio- CO2	NBio- CO2	Total CO2	CH4	N2O	CO2e
Category	lb/day										lb/day					
Hauling	1.7400e-003	0.0203	0.0243	5.0000e-005	0.0310	2.8000e-004	0.0313	3.3800e-003	2.5000e-004	3.6400e-003		5.0896	5.0896	4.0000e-005		5.0905
Vendor	0.0000	0.0000	0.0000	0.0000	0.0000	0.0000	0.0000	0.0000	0.0000	0.0000		0.0000	0.0000	0.0000		0.0000
Worker	0.1336	0.1682	2.0811	4.3600e-003	0.3353	3.1700e-003	0.3385	0.0889	2.9100e-003	0.0919		368.7064	368.7064	0.0201		369.1279
Total	**0.1354**	**0.1885**	**2.1053**	**4.4100e-003**	**0.3663**	**3.4500e-003**	**0.3698**	**0.0923**	**3.1600e-003**	**0.0955**		**373.7960**	**373.7960**	**0.0201**		**374.2184**

Mitigated Construction On-Site

	ROG	NOx	CO	SO2	Fugitive PM10	Exhaust PM10	PM10 Total	Fugitive PM2.5	Exhaust PM2.5	PM2.5 Total	Bio- CO2	NBio- CO2	Total CO2	CH4	N2O	CO2e
Category	lb/day										lb/day					
Fugitive Dust					5.3764	0.0000	5.3764	2.6553	0.0000	2.6553			0.0000			0.0000
Off-Road	5.7109	59.9717	40.9319	0.0564		2.9323	2.9323		2.7332	2.7332	0.0000	5,793.4751	5,793.4751	1.6231		5,827.5597
Total	**5.7109**	**59.9717**	**40.9319**	**0.0564**	**5.3764**	**2.9323**	**8.3087**	**2.6553**	**2.7332**	**5.3885**	**0.0000**	**5,793.4751**	**5,793.4751**	**1.6231**		**5,827.5597**

3.2 Grading - 2016

Mitigated Construction Off-Site

	ROG	NOx	CO	SO2	Fugitive PM10	Exhaust PM10	PM10 Total	Fugitive PM2.5	Exhaust PM2.5	PM2.5 Total	Bio- CO2	NBio- CO2	Total CO2	CH4	N2O	CO2e
Category	lb/day										lb/day					
Hauling	1.7400e-003	0.0203	0.0243	5.0000e-005	0.0310	2.8000e-004	0.0313	3.3800e-003	2.5000e-004	3.6400e-003		5.0896	5.0896	4.0000e-005		5.0905
Vendor	0.0000	0.0000	0.0000	0.0000	0.0000	0.0000	0.0000	0.0000	0.0000	0.0000		0.0000	0.0000	0.0000		0.0000
Worker	0.1336	0.1682	2.0811	4.3600e-003	0.3353	3.1700e-003	0.3385	0.0889	2.9100e-003	0.0919		368.7064	368.7064	0.0201		369.1279
Total	**0.1354**	**0.1885**	**2.1053**	**4.4100e-003**	**0.3663**	**3.4500e-003**	**0.3698**	**0.0923**	**3.1600e-003**	**0.0955**		**373.7960**	**373.7960**	**0.0201**		**374.2184**

3.2 Grading - 2017

Unmitigated Construction On-Site

	ROG	NOx	CO	SO2	Fugitive PM10	Exhaust PM10	PM10 Total	Fugitive PM2.5	Exhaust PM2.5	PM2.5 Total	Bio- CO2	NBio- CO2	Total CO2	CH4	N2O	CO2e
Category	lb/day										lb/day					
Fugitive Dust					13.7856	0.0000	13.7856	6.8085	0.0000	6.8085			0.0000			0.0000
Off-Road	5.3567	55.6962	39.2253	0.0564		2.6895	2.6895		2.5052	2.5052		5,713.3912	5,713.3912	1.6148		5,747.3016
Total	**5.3567**	**55.6962**	**39.2253**	**0.0564**	**13.7856**	**2.6895**	**16.4751**	**6.8085**	**2.5052**	**9.3137**		**5,713.3912**	**5,713.3912**	**1.6148**		**5,747.3016**

3.2 Grading - 2017

Unmitigated Construction Off-Site

	ROG	NOx	CO	SO2	Fugitive PM10	Exhaust PM10	PM10 Total	Fugitive PM2.5	Exhaust PM2.5	PM2.5 Total	Bio- CO2	NBio- CO2	Total CO2	CH4	N2O	CO2e
Category	lb/day										lb/day					
Hauling	1.6200e-003	0.0187	0.0231	5.0000e-005	0.0389	2.5000e-004	0.0392	4.2300e-003	2.3000e-004	4.4600e-003		5.0066	5.0066	4.0000e-005		5.0074
Vendor	0.0000	0.0000	0.0000	0.0000	0.0000	0.0000	0.0000	0.0000	0.0000	0.0000		0.0000	0.0000	0.0000		0.0000
Worker	0.1201	0.1521	1.8856	4.3600e-003	0.3353	3.0400e-003	0.3384	0.0889	2.8000e-003	0.0917		354.9083	354.9083	0.0186		355.2978
Total	**0.1217**	**0.1708**	**1.9087**	**4.4100e-003**	**0.3743**	**3.2900e-003**	**0.3776**	**0.0932**	**3.0300e-003**	**0.0962**		**359.9149**	**359.9149**	**0.0186**		**360.3053**

Mitigated Construction On-Site

	ROG	NOx	CO	SO2	Fugitive PM10	Exhaust PM10	PM10 Total	Fugitive PM2.5	Exhaust PM2.5	PM2.5 Total	Bio- CO2	NBio- CO2	Total CO2	CH4	N2O	CO2e
Category	lb/day										lb/day					
Fugitive Dust					5.3764	0.0000	5.3764	2.6553	0.0000	2.6553			0.0000			0.0000
Off-Road	5.3567	55.6962	39.2253	0.0564		2.6895	2.6895		2.5052	2.5052	0.0000	5,713.3912	5,713.3912	1.6148		5,747.3016
Total	**5.3567**	**55.6962**	**39.2253**	**0.0564**	**5.3764**	**2.6895**	**8.0659**	**2.6553**	**2.5052**	**5.1605**	**0.0000**	**5,713.3912**	**5,713.3912**	**1.6148**		**5,747.3016**

3.2 Grading - 2017

Mitigated Construction Off-Site

	ROG	NOx	CO	SO2	Fugitive PM10	Exhaust PM10	PM10 Total	Fugitive PM2.5	Exhaust PM2.5	PM2.5 Total	Bio- CO2	NBio- CO2	Total CO2	CH4	N2O	CO2e
Category	lb/day										lb/day					
Hauling	1.6200e-003	0.0187	0.0231	5.0000e-005	0.0389	2.5000e-004	0.0392	4.2300e-003	2.3000e-004	4.4600e-003		5.0066	5.0066	4.0000e-005		5.0074
Vendor	0.0000	0.0000	0.0000	0.0000	0.0000	0.0000	0.0000	0.0000	0.0000	0.0000		0.0000	0.0000	0.0000		0.0000
Worker	0.1201	0.1521	1.8856	4.3600e-003	0.3353	3.0400e-003	0.3384	0.0889	2.8000e-003	0.0917		354.9083	354.9083	0.0186		355.2978
Total	**0.1217**	**0.1708**	**1.9087**	**4.4100e-003**	**0.3743**	**3.2900e-003**	**0.3776**	**0.0932**	**3.0300e-003**	**0.0962**		**359.9149**	**359.9149**	**0.0186**		**360.3053**

4.0 Operational Detail - Mobile

4.1 Mitigation Measures Mobile

	ROG	NOx	CO	SO2	Fugitive PM10	Exhaust PM10	PM10 Total	Fugitive PM2.5	Exhaust PM2.5	PM2.5 Total	Bio- CO2	NBio- CO2	Total CO2	CH4	N2O	CO2e
Category	lb/day										lb/day					
Mitigated	3.0394	27.0726	26.6770	0.0674	26.7212	0.5015	27.2227	4.5512	0.4611	5.0123		6,736.5467	6,736.5467	0.0397		6,737.3793
Unmitigated	3.0394	27.0726	26.6770	0.0674	26.7212	0.5015	27.2227	4.5512	0.4611	5.0123		6,736.5467	6,736.5467	0.0397		6,737.3793

4.2 Trip Summary Information

	Average Daily Trip Rate			Unmitigated	Mitigated
Land Use	Weekday	Saturday	Sunday	Annual VMT	Annual VMT
User Defined Industrial	479.96	479.96	0.00	853,561	853,561
Total	479.96	479.96	0.00	853,561	853,561

4.3 Trip Type Information

	Miles			Trip %			Trip Purpose %		
Land Use	H-W or C-W	H-S or C-C	H-O or C-NW	H-W or C-W	H-S or C-C	H-O or C-NW	Primary	Diverted	Pass-by
User Defined Industrial	16.60	5.70	6.90	0.00	100.00	0.00	100	0	0

LDA	LDT1	LDT2	MDV	LHD1	LHD2	MHD	HHD	OBUS	UBUS	MCY	SBUS	MH
0.000000	0.000000	0.000000	0.000000	0.000000	0.000000	1.000000	0.000000	0.000000	0.000000	0.000000	0.000000	0.000000

4.4 Fleet Mix

5.0 Energy Detail

Historical Energy Use: N

5.1 Mitigation Measures Energy

	ROG	NOx	CO	SO2	Fugitive PM10	Exhaust PM10	PM10 Total	Fugitive PM2.5	Exhaust PM2.5	PM2.5 Total	Bio- CO2	NBio- CO2	Total CO2	CH4	N2O	CO2e
Category	lb/day										lb/day					
NaturalGas Mitigated	0.0000	0.0000	0.0000	0.0000		0.0000	0.0000		0.0000	0.0000		0.0000	0.0000	0.0000	0.0000	0.0000
NaturalGas Unmitigated	0.0000	0.0000	0.0000	0.0000		0.0000	0.0000		0.0000	0.0000		0.0000	0.0000	0.0000	0.0000	0.0000

5.2 Energy by Land Use - NaturalGas

Unmitigated

	NaturalGas Use	ROG	NOx	CO	SO2	Fugitive PM10	Exhaust PM10	PM10 Total	Fugitive PM2.5	Exhaust PM2.5	PM2.5 Total	Bio- CO2	NBio- CO2	Total CO2	CH4	N2O	CO2e
Land Use	kBTU/yr	lb/day										lb/day					
User Defined Industrial	0	0.0000	0.0000	0.0000	0.0000		0.0000	0.0000		0.0000	0.0000		0.0000	0.0000	0.0000	0.0000	0.0000
Total		**0.0000**	**0.0000**	**0.0000**	**0.0000**		**0.0000**	**0.0000**		**0.0000**	**0.0000**		**0.0000**	**0.0000**	**0.0000**	**0.0000**	**0.0000**

Mitigated

	NaturalGas Use	ROG	NOx	CO	SO2	Fugitive PM10	Exhaust PM10	PM10 Total	Fugitive PM2.5	Exhaust PM2.5	PM2.5 Total	Bio- CO2	NBio- CO2	Total CO2	CH4	N2O	CO2e
Land Use	kBTU/yr	lb/day										lb/day					
User Defined Industrial	0	0.0000	0.0000	0.0000	0.0000		0.0000	0.0000		0.0000	0.0000		0.0000	0.0000	0.0000	0.0000	0.0000
Total		**0.0000**	**0.0000**	**0.0000**	**0.0000**		**0.0000**	**0.0000**		**0.0000**	**0.0000**		**0.0000**	**0.0000**	**0.0000**	**0.0000**	**0.0000**

6.0 Area Detail

6.1 Mitigation Measures Area

	ROG	NOx	CO	SO2	Fugitive PM10	Exhaust PM10	PM10 Total	Fugitive PM2.5	Exhaust PM2.5	PM2.5 Total	Bio- CO2	NBio- CO2	Total CO2	CH4	N2O	CO2e
Category	lb/day										lb/day					
Mitigated	1.7300e-003	1.7000e-004	0.0177	0.0000		6.0000e-005	6.0000e-005		6.0000e-005	6.0000e-005		0.0370	0.0370	1.0000e-004		0.0392
Unmitigated	1.7300e-003	1.7000e-004	0.0177	0.0000		6.0000e-005	6.0000e-005		6.0000e-005	6.0000e-005		0.0370	0.0370	1.0000e-004		0.0392

6.2 Area by SubCategory

Unmitigated

	ROG	NOx	CO	SO2	Fugitive PM10	Exhaust PM10	PM10 Total	Fugitive PM2.5	Exhaust PM2.5	PM2.5 Total	Bio- CO2	NBio- CO2	Total CO2	CH4	N2O	CO2e
SubCategory	lb/day										lb/day					
Consumer Products	0.0000					0.0000	0.0000		0.0000	0.0000			0.0000			0.0000
Landscaping	1.7300e-003	1.7000e-004	0.0177	0.0000		6.0000e-005	6.0000e-005		6.0000e-005	6.0000e-005		0.0370	0.0370	1.0000e-004		0.0392
Architectural Coating	0.0000					0.0000	0.0000		0.0000	0.0000			0.0000			0.0000
Total	**1.7300e-003**	**1.7000e-004**	**0.0177**	**0.0000**		**6.0000e-005**	**6.0000e-005**		**6.0000e-005**	**6.0000e-005**		**0.0370**	**0.0370**	**1.0000e-004**		**0.0392**

6.2 Area by SubCategory

Mitigated

	ROG	NOx	CO	SO2	Fugitive PM10	Exhaust PM10	PM10 Total	Fugitive PM2.5	Exhaust PM2.5	PM2.5 Total	Bio- CO2	NBio- CO2	Total CO2	CH4	N2O	CO2e
SubCategory	lb/day										lb/day					
Consumer Products	0.0000					0.0000	0.0000		0.0000	0.0000			0.0000			0.0000
Landscaping	1.7300e-003	1.7000e-004	0.0177	0.0000		6.0000e-005	6.0000e-005		6.0000e-005	6.0000e-005		0.0370	0.0370	1.0000e-004		0.0392
Architectural Coating	0.0000					0.0000	0.0000		0.0000	0.0000			0.0000			0.0000
Total	**1.7300e-003**	**1.7000e-004**	**0.0177**	**0.0000**		**6.0000e-005**	**6.0000e-005**		**6.0000e-005**	**6.0000e-005**		**0.0370**	**0.0370**	**1.0000e-004**		**0.0392**

7.0 Water Detail

7.1 Mitigation Measures Water

8.0 Waste Detail

8.1 Mitigation Measures Waste

9.0 Operational Offroad

Equipment Type	Number	Hours/Day	Days/Year	Horse Power	Load Factor	Fuel Type

10.0 Vegetation

Pacoima Spreading Grounds Improvement Project with 14 CY Trucks

Los Angeles-South Coast County, Winter

1.0 Project Characteristics

1.1 Land Usage

Land Uses	Size	Metric	Lot Acreage	Floor Surface Area	Population
User Defined Industrial	169.00	User Defined Unit	169.00	0.00	0

1.2 Other Project Characteristics

Urbanization	Urban	**Wind Speed (m/s)**	2.2	**Precipitation Freq (Days)**	33
Climate Zone	12			**Operational Year**	2016
Utility Company	Los Angeles Department of Water & Power				
CO2 Intensity (lb/MWhr)	1227.89	**CH4 Intensity (lb/MWhr)**	0.029	**N2O Intensity (lb/MWhr)**	0.006

1.3 User Entered Comments & Non-Default Data

Project Characteristics -

Land Use - 169 acres of User Defined Industrial

Construction Phase - Construction was modelled as occurring from 3-1-16 to 9-1-17

Off-road Equipment - 2 Excavators (8 hrs each), 2 rubber tired dozers (8 hrs each), 1 sediment shaker (Crushing/Proc Equip) (8 hrs), 3 water trucks (Off-Hwy Trucks) (4 hrs each), 1 street sweeper (4 hrs)

Trips and VMT - 18 worker trips per TIA. 77 haul trips of concrete debris to Sunshine Cyn Landfill 8 miles length

Grading - 775 acres disturbed (default). 614 cubic yards of concrete removed.

Vehicle Trips - 480 haul truck trips or 2.84 trips per acre. 100% Primary Trips. Non Res C-C 100% and 5.7 miles.

Vechicle Emission Factors - Fleet Mix 100% MHD

Vechicle Emission Factors - Fleet Mix 100% MHD

Vechicle Emission Factors - Fleet Mix 100% MHD

Construction Off-road Equipment Mitigation - Water Exposed Areas 3 times per day and maintain Unpaved Roads at 12% moisture, per SCAQMD Rule 403 requirements

Road Dust - 1/8 mile of 5.7 mile Haul Truck trips on dirt road or 97.8% of trips on paved roads. Per SCAQMD Rule 403 Unpaved Road Moisture Content 12%

On-road Fugitive Dust - Demo Haul Trip Length 8 miles of which 1/8 mile on dirt roads or 98.4% of haul trip length on paved roads. Per SCAQMD Rule 403 Road Moisture 12%

Table Name	Column Name	Default Value	New Value
tblConstructionPhase	NumDays	310.00	472.00
tblConstructionPhase	NumDaysWeek	5.00	6.00
tblGrading	AcresOfGrading	1,180.00	775.00
tblGrading	MaterialExported	0.00	614.00
tblLandUse	LotAcreage	0.00	169.00
tblOffRoadEquipment	OffRoadEquipmentUnitAmount	1.00	2.00
tblOffRoadEquipment	OffRoadEquipmentUnitAmount	0.00	1.00
tblOffRoadEquipment	OffRoadEquipmentUnitAmount	0.00	3.00
tblOffRoadEquipment	OffRoadEquipmentUnitAmount	0.00	1.00
tblOffRoadEquipment	PhaseName		Grading
tblOffRoadEquipment	PhaseName		Grading
tblOffRoadEquipment	PhaseName		Grading

tblOnRoadDust	HaulingPercentPave	100.00	98.40
tblOnRoadDust	MaterialMoistureContent	0.50	12.00
tblProjectCharacteristics	OperationalYear	2014	2016
tblRoadDust	MaterialMoistureContent	0.5	12
tblRoadDust	RoadPercentPave	100	97.8
tblTripsAndVMT	HaulingTripLength	20.00	8.00
tblVehicleEF	HHD	0.03	0.00
tblVehicleEF	HHD	0.03	0.00
tblVehicleEF	HHD	0.03	0.00
tblVehicleEF	LDA	0.53	0.00
tblVehicleEF	LDA	0.53	0.00
tblVehicleEF	LDA	0.53	0.00
tblVehicleEF	LDT1	0.06	0.00
tblVehicleEF	LDT1	0.06	0.00
tblVehicleEF	LDT1	0.06	0.00
tblVehicleEF	LDT2	0.18	0.00
tblVehicleEF	LDT2	0.18	0.00
tblVehicleEF	LDT2	0.18	0.00
tblVehicleEF	LHD1	0.04	0.00
tblVehicleEF	LHD1	0.04	0.00
tblVehicleEF	LHD1	0.04	0.00
tblVehicleEF	LHD2	6.2830e-003	0.00
tblVehicleEF	LHD2	6.2830e-003	0.00
tblVehicleEF	LHD2	6.2830e-003	0.00
tblVehicleEF	MCY	3.6910e-003	0.00
tblVehicleEF	MCY	3.6910e-003	0.00
tblVehicleEF	MCY	3.6910e-003	0.00
tblVehicleEF	MDV	0.13	0.00

tblVehicleEF	MDV	0.13	0.00
tblVehicleEF	MDV	0.13	0.00
tblVehicleEF	MH	1.6550e-003	0.00
tblVehicleEF	MH	1.6550e-003	0.00
tblVehicleEF	MH	1.6550e-003	0.00
tblVehicleEF	MHD	0.02	1.00
tblVehicleEF	MHD	0.02	1.00
tblVehicleEF	MHD	0.02	1.00
tblVehicleEF	OBUS	2.4530e-003	0.00
tblVehicleEF	OBUS	2.4530e-003	0.00
tblVehicleEF	OBUS	2.4530e-003	0.00
tblVehicleEF	SBUS	5.4300e-004	0.00
tblVehicleEF	SBUS	5.4300e-004	0.00
tblVehicleEF	SBUS	5.4300e-004	0.00
tblVehicleEF	UBUS	3.1570e-003	0.00
tblVehicleEF	UBUS	3.1570e-003	0.00
tblVehicleEF	UBUS	3.1570e-003	0.00
tblVehicleTrips	CC_TL	8.40	5.70
tblVehicleTrips	CC_TTP	0.00	100.00
tblVehicleTrips	PR_TP	0.00	100.00
tblVehicleTrips	ST_TR	0.00	2.84
tblVehicleTrips	WD_TR	0.00	2.84

2.0 Emissions Summary

2.1 Overall Construction (Maximum Daily Emission)

Unmitigated Construction

	ROG	NOx	CO	SO2	Fugitive PM10	Exhaust PM10	PM10 Total	Fugitive PM2.5	Exhaust PM2.5	PM2.5 Total	Bio- CO2	NBio- CO2	Total CO2	CH4	N2O	CO2e
Year	lb/day										lb/day					
2016	5.8557	60.2233	42.9497	0.0606	14.1519	2.9379	17.0899	6.9008	2.7383	9.6391	0.0000	6,152.0444	6,152.0444	1.6449	0.0000	6,186.5863
2017	5.4868	55.9242	41.0512	0.0606	14.1599	2.6948	16.8547	6.9017	2.5101	9.4117	0.0000	6,058.7426	6,058.7426	1.6350	0.0000	6,093.0783
Total	**11.3424**	**116.1476**	**84.0009**	**0.1212**	**28.3118**	**5.6327**	**33.9445**	**13.8025**	**5.2484**	**19.0509**	**0.0000**	**12,210.7870**	**12,210.7870**	**3.2799**	**0.0000**	**12,279.6646**

Mitigated Construction

	ROG	NOx	CO	SO2	Fugitive PM10	Exhaust PM10	PM10 Total	Fugitive PM2.5	Exhaust PM2.5	PM2.5 Total	Bio- CO2	NBio- CO2	Total CO2	CH4	N2O	CO2e
Year	lb/day										lb/day					
2016	5.8557	51.3174	42.9497	0.0606	5.7427	2.9379	8.6806	2.7476	2.7383	5.4860	0.0000	6,152.0444	6,152.0444	1.6449	0.0000	6,186.5863
2017	5.4868	47.8504	41.0512	0.0606	5.7507	2.6948	8.4454	2.7485	2.5101	5.2586	0.0000	6,058.7426	6,058.7426	1.6350	0.0000	6,093.0783
Total	**11.3424**	**99.1677**	**84.0009**	**0.1212**	**11.4934**	**5.6327**	**17.1261**	**5.4961**	**5.2484**	**10.7445**	**0.0000**	**12,210.7870**	**12,210.7870**	**3.2799**	**0.0000**	**12,279.6646**

	ROG	**NOx**	**CO**	**SO2**	**Fugitive PM10**	**Exhaust PM10**	**PM10 Total**	**Fugitive PM2.5**	**Exhaust PM2.5**	**PM2.5 Total**	**Bio- CO2**	**NBio-CO2**	**Total CO2**	**CH4**	**N20**	**CO2e**
Percent Reduction	**0.00**	**14.62**	**0.00**	**0.00**	**59.40**	**0.00**	**49.55**	**60.18**	**0.00**	**43.60**	**0.00**	**0.00**	**0.00**	**0.00**	**0.00**	**0.00**

2.2 Overall Operational

Unmitigated Operational

	ROG	NOx	CO	SO2	Fugitive PM10	Exhaust PM10	PM10 Total	Fugitive PM2.5	Exhaust PM2.5	PM2.5 Total	Bio- CO2	NBio- CO2	Total CO2	CH4	N2O	CO2e
Category	lb/day										lb/day					
Area	1.7300e-003	1.7000e-004	0.0177	0.0000		6.0000e-005	6.0000e-005		6.0000e-005	6.0000e-005		0.0370	0.0370	1.0000e-004		0.0392
Energy	0.0000	0.0000	0.0000	0.0000		0.0000	0.0000		0.0000	0.0000		0.0000	0.0000	0.0000	0.0000	0.0000
Mobile	3.3722	27.4774	32.5119	0.0666	26.2246	0.5106	26.7352	3.0909	0.4695	3.5604		6,645.8345	6,645.8345	0.0407		6,646.6896
Total	**3.3739**	**27.4776**	**32.5296**	**0.0666**	**26.2246**	**0.5107**	**26.7353**	**3.0909**	**0.4696**	**3.5605**		**6,645.8714**	**6,645.8714**	**0.0408**	**0.0000**	**6,646.7288**

Mitigated Operational

	ROG	NOx	CO	SO2	Fugitive PM10	Exhaust PM10	PM10 Total	Fugitive PM2.5	Exhaust PM2.5	PM2.5 Total	Bio- CO2	NBio- CO2	Total CO2	CH4	N2O	CO2e
Category	lb/day										lb/day					
Area	1.7300e-003	1.7000e-004	0.0177	0.0000		6.0000e-005	6.0000e-005		6.0000e-005	6.0000e-005		0.0370	0.0370	1.0000e-004		0.0392
Energy	0.0000	0.0000	0.0000	0.0000		0.0000	0.0000		0.0000	0.0000		0.0000	0.0000	0.0000	0.0000	0.0000
Mobile	3.3722	27.4774	32.5119	0.0666	26.2246	0.5106	26.7352	3.0909	0.4695	3.5604		6,645.8345	6,645.8345	0.0407		6,646.6896
Total	**3.3739**	**27.4776**	**32.5296**	**0.0666**	**26.2246**	**0.5107**	**26.7353**	**3.0909**	**0.4696**	**3.5605**		**6,645.8714**	**6,645.8714**	**0.0408**	**0.0000**	**6,646.7288**

	ROG	NOx	CO	SO2	Fugitive PM10	Exhaust PM10	PM10 Total	Fugitive PM2.5	Exhaust PM2.5	PM2.5 Total	Bio- CO2	NBio-CO2	Total CO2	CH4	N20	CO2e
Percent Reduction	0.00	0.00	0.00	0.00	0.00	0.00	0.00	0.00	0.00	0.00	0.00	0.00	0.00	0.00	0.00	0.00

3.0 Construction Detail

Construction Phase

Phase Number	Phase Name	Phase Type	Start Date	End Date	Num Days Week	Num Days	Phase Description
1	Grading	Grading	3/1/2016	9/1/2017	6	472	

Acres of Grading (Site Preparation Phase): 0

Acres of Grading (Grading Phase): 775

Acres of Paving: 0

Residential Indoor: 0; Residential Outdoor: 0; Non-Residential Indoor: 0; Non-Residential Outdoor: 0 (Architectural Coating – sqft)

OffRoad Equipment

Phase Name	Offroad Equipment Type	Amount	Usage Hours	Horse Power	Load Factor
Grading	Crushing/Proc. Equipment	1	8.00	85	0.78
Grading	Excavators	2	8.00	162	0.38
Grading	Off-Highway Trucks	3	4.00	400	0.38
Grading	Rubber Tired Dozers	2	8.00	255	0.40
Grading	Sweepers/Scrubbers	1	4.00	64	0.46

Trips and VMT

Phase Name	Offroad Equipment Count	Worker Trip Number	Vendor Trip Number	Hauling Trip Number	Worker Trip Length	Vendor Trip Length	Hauling Trip Length	Worker Vehicle Class	Vendor Vehicle Class	Hauling Vehicle Class
Grading	12	30.00	0.00	77.00	14.70	6.90	8.00	LD_Mix	HDT_Mix	HHDT

3.1 Mitigation Measures Construction

Water Exposed Area

Water Unpaved Roads

Clean Paved Roads

3.2 Grading - 2016

Unmitigated Construction On-Site

	ROG	NOx	CO	SO2	Fugitive PM10	Exhaust PM10	PM10 Total	Fugitive PM2.5	Exhaust PM2.5	PM2.5 Total	Bio- CO2	NBio- CO2	Total CO2	CH4	N2O	CO2e
Category	lb/day										lb/day					
Fugitive Dust					13.7856	0.0000	13.7856	6.8085	0.0000	6.8085			0.0000			0.0000
Off-Road	5.7148	60.0160	40.9661	0.0564		2.9345	2.9345		2.7352	2.7352		5,798.9743	5,798.9743	1.6247		5,833.0938
Total	**5.7148**	**60.0160**	**40.9661**	**0.0564**	**13.7856**	**2.9345**	**16.7201**	**6.8085**	**2.7352**	**9.5437**		**5,798.9743**	**5,798.9743**	**1.6247**		**5,833.0938**

3.2 Grading - 2016

Unmitigated Construction Off-Site

	ROG	NOx	CO	SO2	Fugitive PM10	Exhaust PM10	PM10 Total	Fugitive PM2.5	Exhaust PM2.5	PM2.5 Total	Bio- CO2	NBio- CO2	Total CO2	CH4	N2O	CO2e
Category	lb/day										lb/day					
Hauling	1.9100e-003	0.0209	0.0295	5.0000e-005	0.0310	2.8000e-004	0.0313	3.3800e-003	2.6000e-004	3.6400e-003		5.0608	5.0608	4.0000e-005		5.0617
Vendor	0.0000	0.0000	0.0000	0.0000	0.0000	0.0000	0.0000	0.0000	0.0000	0.0000		0.0000	0.0000	0.0000		0.0000
Worker	0.1390	0.1865	1.9541	4.1100e-003	0.3353	3.1700e-003	0.3385	0.0889	2.9100e-003	0.0919		348.0093	348.0093	0.0201		348.4308
Total	**0.1409**	**0.2074**	**1.9836**	**4.1600e-003**	**0.3663**	**3.4500e-003**	**0.3698**	**0.0923**	**3.1700e-003**	**0.0955**		**353.0701**	**353.0701**	**0.0201**		**353.4925**

Mitigated Construction On-Site

	ROG	NOx	CO	SO2	Fugitive PM10	Exhaust PM10	PM10 Total	Fugitive PM2.5	Exhaust PM2.5	PM2.5 Total	Bio- CO2	NBio- CO2	Total CO2	CH4	N2O	CO2e
Category	lb/day										lb/day					
Fugitive Dust					5.3764	0.0000	5.3764	2.6553	0.0000	2.6553			0.0000			0.0000
Off-Road	5.7148	51.1100	40.9661	0.0564		2.9345	2.9345		2.7352	2.7352	0.0000	5,798.9743	5,798.9743	1.6247		5,833.0937
Total	**5.7148**	**51.1100**	**40.9661**	**0.0564**	**5.3764**	**2.9345**	**8.3109**	**2.6553**	**2.7352**	**5.3905**	**0.0000**	**5,798.9743**	**5,798.9743**	**1.6247**		**5,833.0937**

3.2 Grading - 2016

Mitigated Construction Off-Site

	ROG	NOx	CO	SO2	Fugitive PM10	Exhaust PM10	PM10 Total	Fugitive PM2.5	Exhaust PM2.5	PM2.5 Total	Bio- CO2	NBio- CO2	Total CO2	CH4	N2O	CO2e
Category	lb/day										lb/day					
Hauling	1.9100e-003	0.0209	0.0295	5.0000e-005	0.0310	2.8000e-004	0.0313	3.3800e-003	2.6000e-004	3.6400e-003		5.0608	5.0608	4.0000e-005		5.0617
Vendor	0.0000	0.0000	0.0000	0.0000	0.0000	0.0000	0.0000	0.0000	0.0000	0.0000		0.0000	0.0000	0.0000		0.0000
Worker	0.1390	0.1865	1.9541	4.1100e-003	0.3353	3.1700e-003	0.3385	0.0889	2.9100e-003	0.0919		348.0093	348.0093	0.0201		348.4308
Total	**0.1409**	**0.2074**	**1.9836**	**4.1600e-003**	**0.3663**	**3.4500e-003**	**0.3698**	**0.0923**	**3.1700e-003**	**0.0955**		**353.0701**	**353.0701**	**0.0201**		**353.4925**

3.2 Grading - 2017

Unmitigated Construction On-Site

	ROG	NOx	CO	SO2	Fugitive PM10	Exhaust PM10	PM10 Total	Fugitive PM2.5	Exhaust PM2.5	PM2.5 Total	Bio- CO2	NBio- CO2	Total CO2	CH4	N2O	CO2e
Category	lb/day										lb/day					
Fugitive Dust					13.7856	0.0000	13.7856	6.8085	0.0000	6.8085			0.0000			0.0000
Off-Road	5.3603	55.7363	39.2595	0.0564		2.6915	2.6915		2.5070	2.5070		5,718.8038	5,718.8038	1.6164		5,752.7491
Total	**5.3603**	**55.7363**	**39.2595**	**0.0564**	**13.7856**	**2.6915**	**16.4771**	**6.8085**	**2.5070**	**9.3155**		**5,718.8038**	**5,718.8038**	**1.6164**		**5,752.7491**

3.2 Grading - 2017

Unmitigated Construction Off-Site

	ROG	NOx	CO	SO2	Fugitive PM10	Exhaust PM10	PM10 Total	Fugitive PM2.5	Exhaust PM2.5	PM2.5 Total	Bio- CO2	NBio- CO2	Total CO2	CH4	N2O	CO2e
Category	lb/day										lb/day					
Hauling	1.7700e-003	0.0193	0.0284	5.0000e-005	0.0389	2.5000e-004	0.0392	4.2300e-003	2.3000e-004	4.4600e-003		4.9782	4.9782	4.0000e-005		4.9791
Vendor	0.0000	0.0000	0.0000	0.0000	0.0000	0.0000	0.0000	0.0000	0.0000	0.0000		0.0000	0.0000	0.0000		0.0000
Worker	0.1247	0.1687	1.7633	4.1100e-003	0.3353	3.0400e-003	0.3384	0.0889	2.8000e-003	0.0917		334.9606	334.9606	0.0186		335.3502
Total	**0.1264**	**0.1879**	**1.7917**	**4.1600e-003**	**0.3743**	**3.2900e-003**	**0.3776**	**0.0932**	**3.0300e-003**	**0.0962**		**339.9388**	**339.9388**	**0.0186**		**340.3293**

Mitigated Construction On-Site

	ROG	NOx	CO	SO2	Fugitive PM10	Exhaust PM10	PM10 Total	Fugitive PM2.5	Exhaust PM2.5	PM2.5 Total	Bio- CO2	NBio- CO2	Total CO2	CH4	N2O	CO2e
Category	lb/day										lb/day					
Fugitive Dust					5.3764	0.0000	5.3764	2.6553	0.0000	2.6553			0.0000			0.0000
Off-Road	5.3603	47.6624	39.2595	0.0564		2.6915	2.6915		2.5070	2.5070	0.0000	5,718.8038	5,718.8038	1.6164		5,752.7491
Total	**5.3603**	**47.6624**	**39.2595**	**0.0564**	**5.3764**	**2.6915**	**8.0679**	**2.6553**	**2.5070**	**5.1624**	**0.0000**	**5,718.8038**	**5,718.8038**	**1.6164**		**5,752.7491**

3.2 Grading - 2017

Mitigated Construction Off-Site

	ROG	NOx	CO	SO2	Fugitive PM10	Exhaust PM10	PM10 Total	Fugitive PM2.5	Exhaust PM2.5	PM2.5 Total	Bio- CO2	NBio- CO2	Total CO2	CH4	N2O	CO2e
Category	lb/day										lb/day					
Hauling	1.7700e-003	0.0193	0.0284	5.0000e-005	0.0389	2.5000e-004	0.0392	4.2300e-003	2.3000e-004	4.4600e-003		4.9782	4.9782	4.0000e-005		4.9791
Vendor	0.0000	0.0000	0.0000	0.0000	0.0000	0.0000	0.0000	0.0000	0.0000	0.0000		0.0000	0.0000	0.0000		0.0000
Worker	0.1247	0.1687	1.7633	4.1100e-003	0.3353	3.0400e-003	0.3384	0.0889	2.8000e-003	0.0917		334.9606	334.9606	0.0186		335.3502
Total	**0.1264**	**0.1879**	**1.7917**	**4.1600e-003**	**0.3743**	**3.2900e-003**	**0.3776**	**0.0932**	**3.0300e-003**	**0.0962**		**339.9388**	**339.9388**	**0.0186**		**340.3293**

4.0 Operational Detail - Mobile

4.1 Mitigation Measures Mobile

	ROG	NOx	CO	SO2	Fugitive PM10	Exhaust PM10	PM10 Total	Fugitive PM2.5	Exhaust PM2.5	PM2.5 Total	Bio- CO2	NBio- CO2	Total CO2	CH4	N2O	CO2e
Category	lb/day										lb/day					
Mitigated	3.3722	27.4774	32.5119	0.0666	26.2246	0.5106	26.7352	3.0909	0.4695	3.5604		6,645.8345	6,645.8345	0.0407		6,646.6896
Unmitigated	3.3722	27.4774	32.5119	0.0666	26.2246	0.5106	26.7352	3.0909	0.4695	3.5604		6,645.8345	6,645.8345	0.0407		6,646.6896

4.2 Trip Summary Information

	Average Daily Trip Rate			Unmitigated	Mitigated
Land Use	Weekday	Saturday	Sunday	Annual VMT	Annual VMT
User Defined Industrial	479.96	479.96	0.00	853,561	853,561
Total	479.96	479.96	0.00	853,561	853,561

4.3 Trip Type Information

	Miles			Trip %			Trip Purpose %		
Land Use	H-W or C-W	H-S or C-C	H-O or C-NW	H-W or C-W	H-S or C-C	H-O or C-NW	Primary	Diverted	Pass-by
User Defined Industrial	16.60	5.70	6.90	0.00	100.00	0.00	100	0	0

LDA	LDT1	LDT2	MDV	LHD1	LHD2	MHD	HHD	OBUS	UBUS	MCY	SBUS	MH
0.000000	0.000000	0.000000	0.000000	0.000000	0.000000	1.000000	0.000000	0.000000	0.000000	0.000000	0.000000	0.000000

4.4 Fleet Mix

5.0 Energy Detail

Historical Energy Use: N

5.1 Mitigation Measures Energy

	ROG	NOx	CO	SO2	Fugitive PM10	Exhaust PM10	PM10 Total	Fugitive PM2.5	Exhaust PM2.5	PM2.5 Total	Bio- CO2	NBio- CO2	Total CO2	CH4	N2O	CO2e
Category	lb/day										lb/day					
NaturalGas Mitigated	0.0000	0.0000	0.0000	0.0000		0.0000	0.0000		0.0000	0.0000		0.0000	0.0000	0.0000	0.0000	0.0000
NaturalGas Unmitigated	0.0000	0.0000	0.0000	0.0000		0.0000	0.0000		0.0000	0.0000		0.0000	0.0000	0.0000	0.0000	0.0000

5.2 Energy by Land Use - NaturalGas

Unmitigated

	NaturalGas Use	ROG	NOx	CO	SO2	Fugitive PM10	Exhaust PM10	PM10 Total	Fugitive PM2.5	Exhaust PM2.5	PM2.5 Total	Bio- CO2	NBio- CO2	Total CO2	CH4	N2O	CO2e
Land Use	kBTU/yr	lb/day										lb/day					
User Defined Industrial	0	0.0000	0.0000	0.0000	0.0000		0.0000	0.0000		0.0000	0.0000		0.0000	0.0000	0.0000	0.0000	0.0000
Total		**0.0000**	**0.0000**	**0.0000**	**0.0000**		**0.0000**	**0.0000**		**0.0000**	**0.0000**		**0.0000**	**0.0000**	**0.0000**	**0.0000**	**0.0000**

Mitigated

	NaturalGas Use	ROG	NOx	CO	SO2	Fugitive PM10	Exhaust PM10	PM10 Total	Fugitive PM2.5	Exhaust PM2.5	PM2.5 Total	Bio- CO2	NBio- CO2	Total CO2	CH4	N2O	CO2e
Land Use	kBTU/yr	lb/day										lb/day					
User Defined Industrial	0	0.0000	0.0000	0.0000	0.0000		0.0000	0.0000		0.0000	0.0000		0.0000	0.0000	0.0000	0.0000	0.0000
Total		**0.0000**	**0.0000**	**0.0000**	**0.0000**		**0.0000**	**0.0000**		**0.0000**	**0.0000**		**0.0000**	**0.0000**	**0.0000**	**0.0000**	**0.0000**

6.0 Area Detail

6.1 Mitigation Measures Area

	ROG	NOx	CO	SO2	Fugitive PM10	Exhaust PM10	PM10 Total	Fugitive PM2.5	Exhaust PM2.5	PM2.5 Total	Bio- CO2	NBio- CO2	Total CO2	CH4	N2O	CO2e
Category	lb/day										lb/day					
Mitigated	1.7300e-003	1.7000e-004	0.0177	0.0000		6.0000e-005	6.0000e-005		6.0000e-005	6.0000e-005		0.0370	0.0370	1.0000e-004		0.0392
Unmitigated	1.7300e-003	1.7000e-004	0.0177	0.0000		6.0000e-005	6.0000e-005		6.0000e-005	6.0000e-005		0.0370	0.0370	1.0000e-004		0.0392

6.2 Area by SubCategory

Unmitigated

	ROG	NOx	CO	SO2	Fugitive PM10	Exhaust PM10	PM10 Total	Fugitive PM2.5	Exhaust PM2.5	PM2.5 Total	Bio- CO2	NBio- CO2	Total CO2	CH4	N2O	CO2e
SubCategory	lb/day										lb/day					
Consumer Products	0.0000					0.0000	0.0000		0.0000	0.0000			0.0000			0.0000
Landscaping	1.7300e-003	1.7000e-004	0.0177	0.0000		6.0000e-005	6.0000e-005		6.0000e-005	6.0000e-005		0.0370	0.0370	1.0000e-004		0.0392
Architectural Coating	0.0000					0.0000	0.0000		0.0000	0.0000			0.0000			0.0000
Total	**1.7300e-003**	**1.7000e-004**	**0.0177**	**0.0000**		**6.0000e-005**	**6.0000e-005**		**6.0000e-005**	**6.0000e-005**		**0.0370**	**0.0370**	**1.0000e-004**		**0.0392**

6.2 Area by SubCategory

Mitigated

	ROG	NOx	CO	SO2	Fugitive PM10	Exhaust PM10	PM10 Total	Fugitive PM2.5	Exhaust PM2.5	PM2.5 Total	Bio- CO2	NBio- CO2	Total CO2	CH4	N2O	CO2e
SubCategory	lb/day										lb/day					
Consumer Products	0.0000					0.0000	0.0000		0.0000	0.0000			0.0000			0.0000
Landscaping	1.7300e-003	1.7000e-004	0.0177	0.0000		6.0000e-005	6.0000e-005		6.0000e-005	6.0000e-005		0.0370	0.0370	1.0000e-004		0.0392
Architectural Coating	0.0000					0.0000	0.0000		0.0000	0.0000			0.0000			0.0000
Total	**1.7300e-003**	**1.7000e-004**	**0.0177**	**0.0000**		**6.0000e-005**	**6.0000e-005**		**6.0000e-005**	**6.0000e-005**		**0.0370**	**0.0370**	**1.0000e-004**		**0.0392**

7.0 Water Detail

7.1 Mitigation Measures Water

8.0 Waste Detail

8.1 Mitigation Measures Waste

9.0 Operational Offroad

Equipment Type	Number	Hours/Day	Days/Year	Horse Power	Load Factor	Fuel Type

10.0 Vegetation

APPENDIX B

18-Cubic Yard Haul Trucks Alternative CalEEMod Model Daily Printouts

Pacoima Spreading Grounds Improvement Project with 18 CY Trucks

Los Angeles-South Coast County, Summer

1.0 Project Characteristics

1.1 Land Usage

Land Uses	Size	Metric	Lot Acreage	Floor Surface Area	Population
User Defined Industrial	169.00	User Defined Unit	169.00	0.00	0

1.2 Other Project Characteristics

Urbanization	Urban	**Wind Speed (m/s)**	2.2	**Precipitation Freq (Days)**	33
Climate Zone	12			**Operational Year**	2016
Utility Company	Los Angeles Department of Water & Power				
CO2 Intensity (lb/MWhr)	1227.89	**CH4 Intensity (lb/MWhr)**	0.029	**N2O Intensity (lb/MWhr)**	0.006

1.3 User Entered Comments & Non-Default Data

Project Characteristics -

Land Use - 169 acres of User Defined Industrial

Construction Phase - Construction was modelled as occurring from 3-1-16 to 9-1-17

Off-road Equipment - 2 Excavators (8 hrs each), 2 rubber tired dozers (8 hrs each), 1 sediment shaker (Crushing/Proc Equip) (8 hrs), 3 water trucks (Off-Hwy Trucks) (4 hrs each), 1 street sweeper (4 hrs)

Trips and VMT - 18 worker trips per TIA. 77 haul trips of concrete debris to Sunshine Cyn Landfill 8 miles length

On-road Fugitive Dust - Demo Haul Trip Length 8 miles of which 1/8 mile on dirt roads or 98.4% of haul trip length on paved roads. Per SCAQMD Rule 403 Road Moisture 12%

Grading - 775 acres disturbed (default). 614 cubic yards of concrete removed.

Vehicle Trips - 360 18 CY haul truck trips or 2.13 trips per acre. 100% Primary Trips. Non Res C-C 100% and 5.7 miles.

Vechicle Emission Factors - Fleet Mix 100% HHD

Vechicle Emission Factors - Fleet Mix 100% HHD

Vechicle Emission Factors - Fleet Mix 100% HHD

Road Dust - 1/8 mile of 5.7 mile Haul Truck trips on dirt road or 97.8% of trips on paved roads avg weight 20 tons. Per SCAQMD Rule 403 Unpaved Road Moisture Content 12% and Mean Speed 15 mph.

Construction Off-road Equipment Mitigation - Water Exposed Areas 3 times per day and maintain Unpaved Roads at 12% moisture, per SCAQMD Rule 403 requirements

Table Name	Column Name	Default Value	New Value
tblConstructionPhase	NumDays	310.00	472.00
tblConstructionPhase	NumDaysWeek	5.00	6.00
tblGrading	AcresOfGrading	0.00	775.00
tblGrading	MaterialExported	0.00	614.00
tblLandUse	LotAcreage	0.00	169.00
tblOffRoadEquipment	OffRoadEquipmentUnitAmount	1.00	2.00
tblOnRoadDust	HaulingPercentPave	100.00	98.40
tblOnRoadDust	MaterialMoistureContent	0.50	12.00
tblProjectCharacteristics	OperationalYear	2014	2016
tblRoadDust	MaterialMoistureContent	0.5	12
tblRoadDust	MeanVehicleSpeed	40	15

tblRoadDust	MobileAverageVehicleWeight	2.4	20
tblRoadDust	RoadPercentPave	100	97.8
tblTripsAndVMT	HaulingTripLength	20.00	8.00
tblTripsAndVMT	WorkerTripNumber	23.00	30.00
tblVehicleEF	HHD	0.03	1.00
tblVehicleEF	HHD	0.03	1.00
tblVehicleEF	HHD	0.03	1.00
tblVehicleEF	LDA	0.53	0.00
tblVehicleEF	LDA	0.53	0.00
tblVehicleEF	LDA	0.53	0.00
tblVehicleEF	LDT1	0.06	0.00
tblVehicleEF	LDT1	0.06	0.00
tblVehicleEF	LDT1	0.06	0.00
tblVehicleEF	LDT2	0.18	0.00
tblVehicleEF	LDT2	0.18	0.00
tblVehicleEF	LDT2	0.18	0.00
tblVehicleEF	LHD1	0.04	0.00
tblVehicleEF	LHD1	0.04	0.00
tblVehicleEF	LHD1	0.04	0.00
tblVehicleEF	LHD2	6.2830e-003	0.00
tblVehicleEF	LHD2	6.2830e-003	0.00
tblVehicleEF	LHD2	6.2830e-003	0.00
tblVehicleEF	MCY	3.6910e-003	0.00
tblVehicleEF	MCY	3.6910e-003	0.00
tblVehicleEF	MCY	3.6910e-003	0.00
tblVehicleEF	MDV	0.13	0.00
tblVehicleEF	MDV	0.13	0.00
tblVehicleEF	MDV	0.13	0.00

tblVehicleEF	MH	1.6550e-003	0.00
tblVehicleEF	MH	1.6550e-003	0.00
tblVehicleEF	MH	1.6550e-003	0.00
tblVehicleEF	MHD	0.02	0.00
tblVehicleEF	MHD	0.02	0.00
tblVehicleEF	MHD	0.02	0.00
tblVehicleEF	OBUS	2.4530e-003	0.00
tblVehicleEF	OBUS	2.4530e-003	0.00
tblVehicleEF	OBUS	2.4530e-003	0.00
tblVehicleEF	SBUS	5.4300e-004	0.00
tblVehicleEF	SBUS	5.4300e-004	0.00
tblVehicleEF	SBUS	5.4300e-004	0.00
tblVehicleEF	UBUS	3.1570e-003	0.00
tblVehicleEF	UBUS	3.1570e-003	0.00
tblVehicleEF	UBUS	3.1570e-003	0.00
tblVehicleTrips	CC_TL	8.40	5.70
tblVehicleTrips	CC_TTP	0.00	100.00
tblVehicleTrips	PR_TP	0.00	100.00
tblVehicleTrips	ST_TR	0.00	2.13
tblVehicleTrips	WD_TR	0.00	2.13

2.0 Emissions Summary

2.1 Overall Construction (Maximum Daily Emission)

Unmitigated Construction

	ROG	NOx	CO	SO2	Fugitive PM10	Exhaust PM10	PM10 Total	Fugitive PM2.5	Exhaust PM2.5	PM2.5 Total	Bio- CO2	NBio- CO2	Total CO2	CH4	N2O	CO2e
Year	lb/day										lb/day					
2016	5.8462	60.1601	43.0372	0.0608	14.1519	2.9357	17.0877	6.9008	2.7363	9.6371	0.0000	6,167.2711	6,167.2711	1.6432	0.0000	6,201.7781
2017	5.4784	55.8669	41.1339	0.0608	14.1599	2.6928	16.8527	6.9017	2.5083	9.4099	0.0000	6,073.3060	6,073.3060	1.6334	0.0000	6,107.6069
Total	**11.3246**	**116.0271**	**84.1711**	**0.1216**	**28.3118**	**5.6285**	**33.9404**	**13.8025**	**5.2446**	**19.0471**	**0.0000**	**12,240.5771**	**12,240.5771**	**3.2766**	**0.0000**	**12,309.3850**

Mitigated Construction

	ROG	NOx	CO	SO2	Fugitive PM10	Exhaust PM10	PM10 Total	Fugitive PM2.5	Exhaust PM2.5	PM2.5 Total	Bio- CO2	NBio- CO2	Total CO2	CH4	N2O	CO2e
Year	lb/day										lb/day					
2016	5.8462	60.1601	43.0372	0.0608	5.7427	2.9357	8.6785	2.7476	2.7363	5.4840	0.0000	6,167.2711	6,167.2711	1.6432	0.0000	6,201.7781
2017	5.4784	55.8669	41.1339	0.0608	5.7507	2.6928	8.4435	2.7485	2.5083	5.2567	0.0000	6,073.3060	6,073.3060	1.6334	0.0000	6,107.6069
Total	**11.3246**	**116.0271**	**84.1711**	**0.1216**	**11.4934**	**5.6285**	**17.1219**	**5.4961**	**5.2446**	**10.7407**	**0.0000**	**12,240.5771**	**12,240.5771**	**3.2766**	**0.0000**	**12,309.3850**

	ROG	NOx	CO	SO2	Fugitive PM10	Exhaust PM10	PM10 Total	Fugitive PM2.5	Exhaust PM2.5	PM2.5 Total	Bio- CO2	NBio-CO2	Total CO2	CH4	N20	CO2e
Percent Reduction	**0.00**	**0.00**	**0.00**	**0.00**	**59.40**	**0.00**	**49.55**	**60.18**	**0.00**	**43.61**	**0.00**	**0.00**	**0.00**	**0.00**	**0.00**	**0.00**

2.2 Overall Operational

Unmitigated Operational

	ROG	NOx	CO	SO2	Fugitive PM10	Exhaust PM10	PM10 Total	Fugitive PM2.5	Exhaust PM2.5	PM2.5 Total	Bio- CO2	NBio- CO2	Total CO2	CH4	N2O	CO2e
Category	lb/day										lb/day					
Area	1.7300e-003	1.7000e-004	0.0177	0.0000		6.0000e-005	6.0000e-005		6.0000e-005	6.0000e-005		0.0370	0.0370	1.0000e-004		0.0392
Energy	0.0000	0.0000	0.0000	0.0000		0.0000	0.0000		0.0000	0.0000		0.0000	0.0000	0.0000	0.0000	0.0000
Mobile	3.3480	33.5207	49.8875	0.0804	22.8479	0.4311	23.2790	4.0604	0.3964	4.4568		8,057.8490	8,057.8490	0.0693		8,059.3044
Total	**3.3497**	**33.5209**	**49.9052**	**0.0804**	**22.8479**	**0.4311**	**23.2790**	**4.0604**	**0.3964**	**4.4568**		**8,057.8860**	**8,057.8860**	**0.0694**	**0.0000**	**8,059.3436**

Mitigated Operational

	ROG	NOx	CO	SO2	Fugitive PM10	Exhaust PM10	PM10 Total	Fugitive PM2.5	Exhaust PM2.5	PM2.5 Total	Bio- CO2	NBio- CO2	Total CO2	CH4	N2O	CO2e
Category	lb/day										lb/day					
Area	1.7300e-003	1.7000e-004	0.0177	0.0000		6.0000e-005	6.0000e-005		6.0000e-005	6.0000e-005		0.0370	0.0370	1.0000e-004		0.0392
Energy	0.0000	0.0000	0.0000	0.0000		0.0000	0.0000		0.0000	0.0000		0.0000	0.0000	0.0000	0.0000	0.0000
Mobile	3.3480	33.5207	49.8875	0.0804	22.8479	0.4311	23.2790	4.0604	0.3964	4.4568		8,057.8490	8,057.8490	0.0693		8,059.3044
Total	**3.3497**	**33.5209**	**49.9052**	**0.0804**	**22.8479**	**0.4311**	**23.2790**	**4.0604**	**0.3964**	**4.4568**		**8,057.8860**	**8,057.8860**	**0.0694**	**0.0000**	**8,059.3436**

	ROG	NOx	CO	SO2	Fugitive PM10	Exhaust PM10	PM10 Total	Fugitive PM2.5	Exhaust PM2.5	PM2.5 Total	Bio- CO2	NBio-CO2	Total CO2	CH4	N20	CO2e
Percent Reduction	0.00	0.00	0.00	0.00	0.00	0.00	0.00	0.00	0.00	0.00	0.00	0.00	0.00	0.00	0.00	0.00

3.0 Construction Detail

Construction Phase

Phase Number	Phase Name	Phase Type	Start Date	End Date	Num Days Week	Num Days	Phase Description
1	Grading	Grading	3/1/2016	9/1/2017	6	472	

Acres of Grading (Site Preparation Phase): 0

Acres of Grading (Grading Phase): 775

Acres of Paving: 0

Residential Indoor: 0; Residential Outdoor: 0; Non-Residential Indoor: 0; Non-Residential Outdoor: 0 (Architectural Coating – sqft)

OffRoad Equipment

Phase Name	Offroad Equipment Type	Amount	Usage Hours	Horse Power	Load Factor
Grading	Crushing/Proc. Equipment	1	8.00	85	0.78
Grading	Excavators	2	8.00	162	0.38
Grading	Off-Highway Trucks	3	4.00	400	0.38
Grading	Rubber Tired Dozers	2	8.00	255	0.40
Grading	Sweepers/Scrubbers	1	4.00	64	0.46

Trips and VMT

Phase Name	Offroad Equipment Count	Worker Trip Number	Vendor Trip Number	Hauling Trip Number	Worker Trip Length	Vendor Trip Length	Hauling Trip Length	Worker Vehicle Class	Vendor Vehicle Class	Hauling Vehicle Class
Grading	9	30.00	0.00	77.00	14.70	6.90	8.00	LD_Mix	HDT_Mix	HHDT

3.1 Mitigation Measures Construction

Water Exposed Area

Water Unpaved Roads

3.2 Grading - 2016

Unmitigated Construction On-Site

	ROG	NOx	CO	SO2	Fugitive PM10	Exhaust PM10	PM10 Total	Fugitive PM2.5	Exhaust PM2.5	PM2.5 Total	Bio- CO2	NBio- CO2	Total CO2	CH4	N2O	CO2e
Category	lb/day										lb/day					
Fugitive Dust					13.7856	0.0000	13.7856	6.8085	0.0000	6.8085			0.0000			0.0000
Off-Road	5.7109	59.9717	40.9319	0.0564		2.9323	2.9323		2.7332	2.7332		5,793.4751	5,793.4751	1.6231		5,827.5597
Total	**5.7109**	**59.9717**	**40.9319**	**0.0564**	**13.7856**	**2.9323**	**16.7179**	**6.8085**	**2.7332**	**9.5417**		**5,793.4751**	**5,793.4751**	**1.6231**		**5,827.5597**

3.2 Grading - 2016

Unmitigated Construction Off-Site

	ROG	NOx	CO	SO2	Fugitive PM10	Exhaust PM10	PM10 Total	Fugitive PM2.5	Exhaust PM2.5	PM2.5 Total	Bio- CO2	NBio- CO2	Total CO2	CH4	N2O	CO2e
Category	lb/day										lb/day					
Hauling	1.7400e-003	0.0203	0.0243	5.0000e-005	0.0310	2.8000e-004	0.0313	3.3800e-003	2.5000e-004	3.6400e-003		5.0896	5.0896	4.0000e-005		5.0905
Vendor	0.0000	0.0000	0.0000	0.0000	0.0000	0.0000	0.0000	0.0000	0.0000	0.0000		0.0000	0.0000	0.0000		0.0000
Worker	0.1336	0.1682	2.0811	4.3600e-003	0.3353	3.1700e-003	0.3385	0.0889	2.9100e-003	0.0919		368.7064	368.7064	0.0201		369.1279
Total	**0.1354**	**0.1885**	**2.1053**	**4.4100e-003**	**0.3663**	**3.4500e-003**	**0.3698**	**0.0923**	**3.1600e-003**	**0.0955**		**373.7960**	**373.7960**	**0.0201**		**374.2184**

Mitigated Construction On-Site

	ROG	NOx	CO	SO2	Fugitive PM10	Exhaust PM10	PM10 Total	Fugitive PM2.5	Exhaust PM2.5	PM2.5 Total	Bio- CO2	NBio- CO2	Total CO2	CH4	N2O	CO2e
Category	lb/day										lb/day					
Fugitive Dust					5.3764	0.0000	5.3764	2.6553	0.0000	2.6553			0.0000			0.0000
Off-Road	5.7109	59.9717	40.9319	0.0564		2.9323	2.9323		2.7332	2.7332	0.0000	5,793.4751	5,793.4751	1.6231		5,827.5597
Total	**5.7109**	**59.9717**	**40.9319**	**0.0564**	**5.3764**	**2.9323**	**8.3087**	**2.6553**	**2.7332**	**5.3885**	**0.0000**	**5,793.4751**	**5,793.4751**	**1.6231**		**5,827.5597**

3.2 Grading - 2016

Mitigated Construction Off-Site

	ROG	NOx	CO	SO2	Fugitive PM10	Exhaust PM10	PM10 Total	Fugitive PM2.5	Exhaust PM2.5	PM2.5 Total	Bio- CO2	NBio- CO2	Total CO2	CH4	N2O	CO2e
Category	lb/day										lb/day					
Hauling	1.7400e-003	0.0203	0.0243	5.0000e-005	0.0310	2.8000e-004	0.0313	3.3800e-003	2.5000e-004	3.6400e-003		5.0896	5.0896	4.0000e-005		5.0905
Vendor	0.0000	0.0000	0.0000	0.0000	0.0000	0.0000	0.0000	0.0000	0.0000	0.0000		0.0000	0.0000	0.0000		0.0000
Worker	0.1336	0.1682	2.0811	4.3600e-003	0.3353	3.1700e-003	0.3385	0.0889	2.9100e-003	0.0919		368.7064	368.7064	0.0201		369.1279
Total	**0.1354**	**0.1885**	**2.1053**	**4.4100e-003**	**0.3663**	**3.4500e-003**	**0.3698**	**0.0923**	**3.1600e-003**	**0.0955**		**373.7960**	**373.7960**	**0.0201**		**374.2184**

3.2 Grading - 2017

Unmitigated Construction On-Site

	ROG	NOx	CO	SO2	Fugitive PM10	Exhaust PM10	PM10 Total	Fugitive PM2.5	Exhaust PM2.5	PM2.5 Total	Bio- CO2	NBio- CO2	Total CO2	CH4	N2O	CO2e
Category	lb/day										lb/day					
Fugitive Dust					13.7856	0.0000	13.7856	6.8085	0.0000	6.8085			0.0000			0.0000
Off-Road	5.3567	55.6962	39.2253	0.0564		2.6895	2.6895		2.5052	2.5052		5,713.3912	5,713.3912	1.6148		5,747.3016
Total	**5.3567**	**55.6962**	**39.2253**	**0.0564**	**13.7856**	**2.6895**	**16.4751**	**6.8085**	**2.5052**	**9.3137**		**5,713.3912**	**5,713.3912**	**1.6148**		**5,747.3016**

3.2 Grading - 2017

Unmitigated Construction Off-Site

	ROG	NOx	CO	SO2	Fugitive PM10	Exhaust PM10	PM10 Total	Fugitive PM2.5	Exhaust PM2.5	PM2.5 Total	Bio- CO2	NBio- CO2	Total CO2	CH4	N2O	CO2e
Category	lb/day										lb/day					
Hauling	1.6200e-003	0.0187	0.0231	5.0000e-005	0.0389	2.5000e-004	0.0392	4.2300e-003	2.3000e-004	4.4600e-003		5.0066	5.0066	4.0000e-005		5.0074
Vendor	0.0000	0.0000	0.0000	0.0000	0.0000	0.0000	0.0000	0.0000	0.0000	0.0000		0.0000	0.0000	0.0000		0.0000
Worker	0.1201	0.1521	1.8856	4.3600e-003	0.3353	3.0400e-003	0.3384	0.0889	2.8000e-003	0.0917		354.9083	354.9083	0.0186		355.2978
Total	**0.1217**	**0.1708**	**1.9087**	**4.4100e-003**	**0.3743**	**3.2900e-003**	**0.3776**	**0.0932**	**3.0300e-003**	**0.0962**		**359.9149**	**359.9149**	**0.0186**		**360.3053**

Mitigated Construction On-Site

	ROG	NOx	CO	SO2	Fugitive PM10	Exhaust PM10	PM10 Total	Fugitive PM2.5	Exhaust PM2.5	PM2.5 Total	Bio- CO2	NBio- CO2	Total CO2	CH4	N2O	CO2e
Category	lb/day										lb/day					
Fugitive Dust					5.3764	0.0000	5.3764	2.6553	0.0000	2.6553			0.0000			0.0000
Off-Road	5.3567	55.6962	39.2253	0.0564		2.6895	2.6895		2.5052	2.5052	0.0000	5,713.3912	5,713.3912	1.6148		5,747.3016
Total	**5.3567**	**55.6962**	**39.2253**	**0.0564**	**5.3764**	**2.6895**	**8.0659**	**2.6553**	**2.5052**	**5.1605**	**0.0000**	**5,713.3912**	**5,713.3912**	**1.6148**		**5,747.3016**

3.2 Grading - 2017

Mitigated Construction Off-Site

	ROG	NOx	CO	SO2	Fugitive PM10	Exhaust PM10	PM10 Total	Fugitive PM2.5	Exhaust PM2.5	PM2.5 Total	Bio- CO2	NBio- CO2	Total CO2	CH4	N2O	CO2e
Category	lb/day										lb/day					
Hauling	1.6200e-003	0.0187	0.0231	5.0000e-005	0.0389	2.5000e-004	0.0392	4.2300e-003	2.3000e-004	4.4600e-003		5.0066	5.0066	4.0000e-005		5.0074
Vendor	0.0000	0.0000	0.0000	0.0000	0.0000	0.0000	0.0000	0.0000	0.0000	0.0000		0.0000	0.0000	0.0000		0.0000
Worker	0.1201	0.1521	1.8856	4.3600e-003	0.3353	3.0400e-003	0.3384	0.0889	2.8000e-003	0.0917		354.9083	354.9083	0.0186		355.2978
Total	**0.1217**	**0.1708**	**1.9087**	**4.4100e-003**	**0.3743**	**3.2900e-003**	**0.3776**	**0.0932**	**3.0300e-003**	**0.0962**		**359.9149**	**359.9149**	**0.0186**		**360.3053**

4.0 Operational Detail - Mobile

4.1 Mitigation Measures Mobile

	ROG	NOx	CO	SO2	Fugitive PM10	Exhaust PM10	PM10 Total	Fugitive PM2.5	Exhaust PM2.5	PM2.5 Total	Bio- CO2	NBio- CO2	Total CO2	CH4	N2O	CO2e
Category	lb/day										lb/day					
Mitigated	3.3480	33.5207	49.8875	0.0804	22.8479	0.4311	23.2790	4.0604	0.3964	4.4568		8,057.8490	8,057.8490	0.0693		8,059.3044
Unmitigated	3.3480	33.5207	49.8875	0.0804	22.8479	0.4311	23.2790	4.0604	0.3964	4.4568		8,057.8490	8,057.8490	0.0693		8,059.3044

4.2 Trip Summary Information

	Average Daily Trip Rate			Unmitigated	Mitigated
Land Use	Weekday	Saturday	Sunday	Annual VMT	Annual VMT
User Defined Industrial	359.97	359.97	0.00	640,171	640,171
Total	359.97	359.97	0.00	640,171	640,171

4.3 Trip Type Information

	Miles			Trip %			Trip Purpose %		
Land Use	H-W or C-W	H-S or C-C	H-O or C-NW	H-W or C-W	H-S or C-C	H-O or C-NW	Primary	Diverted	Pass-by
User Defined Industrial	16.60	5.70	6.90	0.00	100.00	0.00	100	0	0

LDA	LDT1	LDT2	MDV	LHD1	LHD2	MHD	HHD	OBUS	UBUS	MCY	SBUS	MH
0.000000	0.000000	0.000000	0.000000	0.000000	0.000000	0.000000	1.000000	0.000000	0.000000	0.000000	0.000000	0.000000

4.4 Fleet Mix

5.0 Energy Detail

Historical Energy Use: N

5.1 Mitigation Measures Energy

	ROG	NOx	CO	SO2	Fugitive PM10	Exhaust PM10	PM10 Total	Fugitive PM2.5	Exhaust PM2.5	PM2.5 Total	Bio- CO2	NBio- CO2	Total CO2	CH4	N2O	CO2e
Category	lb/day										lb/day					
NaturalGas Mitigated	0.0000	0.0000	0.0000	0.0000		0.0000	0.0000		0.0000	0.0000		0.0000	0.0000	0.0000	0.0000	0.0000
NaturalGas Unmitigated	0.0000	0.0000	0.0000	0.0000		0.0000	0.0000		0.0000	0.0000		0.0000	0.0000	0.0000	0.0000	0.0000

5.2 Energy by Land Use - NaturalGas

Unmitigated

	NaturalGas Use	ROG	NOx	CO	SO2	Fugitive PM10	Exhaust PM10	PM10 Total	Fugitive PM2.5	Exhaust PM2.5	PM2.5 Total	Bio- CO2	NBio- CO2	Total CO2	CH4	N2O	CO2e
Land Use	kBTU/yr	lb/day										lb/day					
User Defined Industrial	0	0.0000	0.0000	0.0000	0.0000		0.0000	0.0000		0.0000	0.0000		0.0000	0.0000	0.0000	0.0000	0.0000
Total		**0.0000**	**0.0000**	**0.0000**	**0.0000**		**0.0000**	**0.0000**		**0.0000**	**0.0000**		**0.0000**	**0.0000**	**0.0000**	**0.0000**	**0.0000**

Mitigated

	NaturalGas Use	ROG	NOx	CO	SO2	Fugitive PM10	Exhaust PM10	PM10 Total	Fugitive PM2.5	Exhaust PM2.5	PM2.5 Total	Bio- CO2	NBio- CO2	Total CO2	CH4	N2O	CO2e
Land Use	kBTU/yr	lb/day										lb/day					
User Defined Industrial	0	0.0000	0.0000	0.0000	0.0000		0.0000	0.0000		0.0000	0.0000		0.0000	0.0000	0.0000	0.0000	0.0000
Total		**0.0000**	**0.0000**	**0.0000**	**0.0000**		**0.0000**	**0.0000**		**0.0000**	**0.0000**		**0.0000**	**0.0000**	**0.0000**	**0.0000**	**0.0000**

6.0 Area Detail

6.1 Mitigation Measures Area

	ROG	NOx	CO	SO2	Fugitive PM10	Exhaust PM10	PM10 Total	Fugitive PM2.5	Exhaust PM2.5	PM2.5 Total	Bio- CO2	NBio- CO2	Total CO2	CH4	N2O	CO2e
Category	lb/day										lb/day					
Mitigated	1.7300e-003	1.7000e-004	0.0177	0.0000		6.0000e-005	6.0000e-005		6.0000e-005	6.0000e-005		0.0370	0.0370	1.0000e-004		0.0392
Unmitigated	1.7300e-003	1.7000e-004	0.0177	0.0000		6.0000e-005	6.0000e-005		6.0000e-005	6.0000e-005		0.0370	0.0370	1.0000e-004		0.0392

6.2 Area by SubCategory

Unmitigated

	ROG	NOx	CO	SO2	Fugitive PM10	Exhaust PM10	PM10 Total	Fugitive PM2.5	Exhaust PM2.5	PM2.5 Total	Bio- CO2	NBio- CO2	Total CO2	CH4	N2O	CO2e
SubCategory	lb/day										lb/day					
Consumer Products	0.0000					0.0000	0.0000		0.0000	0.0000			0.0000			0.0000
Landscaping	1.7300e-003	1.7000e-004	0.0177	0.0000		6.0000e-005	6.0000e-005		6.0000e-005	6.0000e-005		0.0370	0.0370	1.0000e-004		0.0392
Architectural Coating	0.0000					0.0000	0.0000		0.0000	0.0000			0.0000			0.0000
Total	**1.7300e-003**	**1.7000e-004**	**0.0177**	**0.0000**		**6.0000e-005**	**6.0000e-005**		**6.0000e-005**	**6.0000e-005**		**0.0370**	**0.0370**	**1.0000e-004**		**0.0392**

6.2 Area by SubCategory

Mitigated

	ROG	NOx	CO	SO2	Fugitive PM10	Exhaust PM10	PM10 Total	Fugitive PM2.5	Exhaust PM2.5	PM2.5 Total	Bio- CO2	NBio- CO2	Total CO2	CH4	N2O	CO2e
SubCategory	lb/day										lb/day					
Consumer Products	0.0000					0.0000	0.0000		0.0000	0.0000			0.0000			0.0000
Landscaping	1.7300e-003	1.7000e-004	0.0177	0.0000		6.0000e-005	6.0000e-005		6.0000e-005	6.0000e-005		0.0370	0.0370	1.0000e-004		0.0392
Architectural Coating	0.0000					0.0000	0.0000		0.0000	0.0000			0.0000			0.0000
Total	**1.7300e-003**	**1.7000e-004**	**0.0177**	**0.0000**		**6.0000e-005**	**6.0000e-005**		**6.0000e-005**	**6.0000e-005**		**0.0370**	**0.0370**	**1.0000e-004**		**0.0392**

7.0 Water Detail

7.1 Mitigation Measures Water

8.0 Waste Detail

8.1 Mitigation Measures Waste

9.0 Operational Offroad

Equipment Type	Number	Hours/Day	Days/Year	Horse Power	Load Factor	Fuel Type

10.0 Vegetation

Pacoima Spreading Grounds Improvement Project with 18 CY Trucks

Los Angeles-South Coast County, Winter

1.0 Project Characteristics

1.1 Land Usage

Land Uses	Size	Metric	Lot Acreage	Floor Surface Area	Population
User Defined Industrial	169.00	User Defined Unit	169.00	0.00	0

1.2 Other Project Characteristics

Urbanization	Urban	**Wind Speed (m/s)**	2.2	**Precipitation Freq (Days)**	33
Climate Zone	12			**Operational Year**	2016
Utility Company	Los Angeles Department of Water & Power				
CO2 Intensity (lb/MWhr)	1227.89	**CH4 Intensity (lb/MWhr)**	0.029	**N2O Intensity (lb/MWhr)**	0.006

1.3 User Entered Comments & Non-Default Data

Project Characteristics -

Land Use - 169 acres of User Defined Industrial

Construction Phase - Construction was modelled as occurring from 3-1-16 to 9-1-17

Off-road Equipment - 2 Excavators (8 hrs each), 2 rubber tired dozers (8 hrs each), 1 sediment shaker (Crushing/Proc Equip) (8 hrs), 3 water trucks (Off-Hwy Trucks) (4 hrs each), 1 street sweeper (4 hrs)

Trips and VMT - 18 worker trips per TIA. 77 haul trips of concrete debris to Sunshine Cyn Landfill 8 miles length

On-road Fugitive Dust - Demo Haul Trip Length 8 miles of which 1/8 mile on dirt roads or 98.4% of haul trip length on paved roads. Per SCAQMD Rule 403 Road Moisture 12%

Grading - 775 acres disturbed (default). 614 cubic yards of concrete removed.

Vehicle Trips - 360 18 CY haul truck trips or 2.13 trips per acre. 100% Primary Trips. Non Res C-C 100% and 5.7 miles.

Vechicle Emission Factors - Fleet Mix 100% HHD

Vechicle Emission Factors - Fleet Mix 100% HHD

Vechicle Emission Factors - Fleet Mix 100% HHD

Road Dust - 1/8 mile of 5.7 mile Haul Truck trips on dirt road or 97.8% of trips on paved roads avg weight 20 tons. Per SCAQMD Rule 403 Unpaved Road Moisture Content 12% and Mean Speed 15 mph.

Construction Off-road Equipment Mitigation - Water Exposed Areas 3 times per day and maintain Unpaved Roads at 12% moisture, per SCAQMD Rule 403 requirements

Table Name	Column Name	Default Value	New Value
tblConstructionPhase	NumDays	310.00	472.00
tblConstructionPhase	NumDaysWeek	5.00	6.00
tblGrading	AcresOfGrading	0.00	775.00
tblGrading	MaterialExported	0.00	614.00
tblLandUse	LotAcreage	0.00	169.00
tblOffRoadEquipment	OffRoadEquipmentUnitAmount	1.00	2.00
tblOnRoadDust	HaulingPercentPave	100.00	98.40
tblOnRoadDust	MaterialMoistureContent	0.50	12.00
tblProjectCharacteristics	OperationalYear	2014	2016
tblRoadDust	MaterialMoistureContent	0.5	12
tblRoadDust	MeanVehicleSpeed	40	15

tblRoadDust	MobileAverageVehicleWeight	2.4	20
tblRoadDust	RoadPercentPave	100	97.8
tblTripsAndVMT	HaulingTripLength	20.00	8.00
tblTripsAndVMT	WorkerTripNumber	23.00	30.00
tblVehicleEF	HHD	0.03	1.00
tblVehicleEF	HHD	0.03	1.00
tblVehicleEF	HHD	0.03	1.00
tblVehicleEF	LDA	0.53	0.00
tblVehicleEF	LDA	0.53	0.00
tblVehicleEF	LDA	0.53	0.00
tblVehicleEF	LDT1	0.06	0.00
tblVehicleEF	LDT1	0.06	0.00
tblVehicleEF	LDT1	0.06	0.00
tblVehicleEF	LDT2	0.18	0.00
tblVehicleEF	LDT2	0.18	0.00
tblVehicleEF	LDT2	0.18	0.00
tblVehicleEF	LHD1	0.04	0.00
tblVehicleEF	LHD1	0.04	0.00
tblVehicleEF	LHD1	0.04	0.00
tblVehicleEF	LHD2	6.2830e-003	0.00
tblVehicleEF	LHD2	6.2830e-003	0.00
tblVehicleEF	LHD2	6.2830e-003	0.00
tblVehicleEF	MCY	3.6910e-003	0.00
tblVehicleEF	MCY	3.6910e-003	0.00
tblVehicleEF	MCY	3.6910e-003	0.00
tblVehicleEF	MDV	0.13	0.00
tblVehicleEF	MDV	0.13	0.00
tblVehicleEF	MDV	0.13	0.00

tblVehicleEF	MH	1.6550e-003	0.00
tblVehicleEF	MH	1.6550e-003	0.00
tblVehicleEF	MH	1.6550e-003	0.00
tblVehicleEF	MHD	0.02	0.00
tblVehicleEF	MHD	0.02	0.00
tblVehicleEF	MHD	0.02	0.00
tblVehicleEF	OBUS	2.4530e-003	0.00
tblVehicleEF	OBUS	2.4530e-003	0.00
tblVehicleEF	OBUS	2.4530e-003	0.00
tblVehicleEF	SBUS	5.4300e-004	0.00
tblVehicleEF	SBUS	5.4300e-004	0.00
tblVehicleEF	SBUS	5.4300e-004	0.00
tblVehicleEF	UBUS	3.1570e-003	0.00
tblVehicleEF	UBUS	3.1570e-003	0.00
tblVehicleEF	UBUS	3.1570e-003	0.00
tblVehicleTrips	CC_TL	8.40	5.70
tblVehicleTrips	CC_TTP	0.00	100.00
tblVehicleTrips	PR_TP	0.00	100.00
tblVehicleTrips	ST_TR	0.00	2.13
tblVehicleTrips	WD_TR	0.00	2.13

2.0 Emissions Summary

2.1 Overall Construction (Maximum Daily Emission)

Unmitigated Construction

	ROG	NOx	CO	SO2	Fugitive PM10	Exhaust PM10	PM10 Total	Fugitive PM2.5	Exhaust PM2.5	PM2.5 Total	Bio- CO2	NBio- CO2	Total CO2	CH4	N2O	CO2e
Year	lb/day										lb/day					
2016	5.8518	60.1790	42.9155	0.0605	14.1519	2.9357	17.0877	6.9008	2.7363	9.6371	0.0000	6,146.5452	6,146.5452	1.6432	0.0000	6,181.0523
2017	5.4831	55.8841	41.0170	0.0605	14.1599	2.6928	16.8527	6.9017	2.5083	9.4099	0.0000	6,053.3300	6,053.3300	1.6334	0.0000	6,087.6309
Total	**11.3349**	**116.0631**	**83.9324**	**0.1211**	**28.3118**	**5.6286**	**33.9404**	**13.8025**	**5.2446**	**19.0471**	**0.0000**	**12,199.8752**	**12,199.8752**	**3.2766**	**0.0000**	**12,268.6831**

Mitigated Construction

	ROG	NOx	CO	SO2	Fugitive PM10	Exhaust PM10	PM10 Total	Fugitive PM2.5	Exhaust PM2.5	PM2.5 Total	Bio- CO2	NBio- CO2	Total CO2	CH4	N2O	CO2e
Year	lb/day										lb/day					
2016	5.8518	60.1790	42.9155	0.0605	5.7427	2.9357	8.6785	2.7476	2.7363	5.4840	0.0000	6,146.5452	6,146.5452	1.6432	0.0000	6,181.0522
2017	5.4831	55.8841	41.0170	0.0605	5.7507	2.6928	8.4435	2.7485	2.5083	5.2567	0.0000	6,053.3300	6,053.3300	1.6334	0.0000	6,087.6309
Total	**11.3349**	**116.0631**	**83.9324**	**0.1211**	**11.4934**	**5.6286**	**17.1219**	**5.4961**	**5.2446**	**10.7407**	**0.0000**	**12,199.8752**	**12,199.8752**	**3.2766**	**0.0000**	**12,268.6831**

	ROG	**NOx**	**CO**	**SO2**	**Fugitive PM10**	**Exhaust PM10**	**PM10 Total**	**Fugitive PM2.5**	**Exhaust PM2.5**	**PM2.5 Total**	**Bio- CO2**	**NBio-CO2**	**Total CO2**	**CH4**	**N20**	**CO2e**
Percent Reduction	**0.00**	**0.00**	**0.00**	**0.00**	**59.40**	**0.00**	**49.55**	**60.18**	**0.00**	**43.61**	**0.00**	**0.00**	**0.00**	**0.00**	**0.00**	**0.00**

2.2 Overall Operational

Unmitigated Operational

	ROG	NOx	CO	SO2	Fugitive PM10	Exhaust PM10	PM10 Total	Fugitive PM2.5	Exhaust PM2.5	PM2.5 Total	Bio- CO2	NBio- CO2	Total CO2	CH4	N2O	CO2e
Category	lb/day										lb/day					
Area	1.7300e-003	1.7000e-004	0.0177	0.0000		6.0000e-005	6.0000e-005		6.0000e-005	6.0000e-005		0.0370	0.0370	1.0000e-004		0.0392
Energy	0.0000	0.0000	0.0000	0.0000		0.0000	0.0000		0.0000	0.0000		0.0000	0.0000	0.0000	0.0000	0.0000
Mobile	3.7251	34.4231	61.4578	0.0800	22.8479	0.4347	23.2826	4.0604	0.3997	4.4601		7,994.2418	7,994.2418	0.0718		7,995.7505
Total	**3.7268**	**34.4232**	**61.4755**	**0.0800**	**22.8479**	**0.4348**	**23.2827**	**4.0604**	**0.3998**	**4.4602**		**7,994.2788**	**7,994.2788**	**0.0719**	**0.0000**	**7,995.7897**

Mitigated Operational

	ROG	NOx	CO	SO2	Fugitive PM10	Exhaust PM10	PM10 Total	Fugitive PM2.5	Exhaust PM2.5	PM2.5 Total	Bio- CO2	NBio- CO2	Total CO2	CH4	N2O	CO2e
Category	lb/day										lb/day					
Area	1.7300e-003	1.7000e-004	0.0177	0.0000		6.0000e-005	6.0000e-005		6.0000e-005	6.0000e-005		0.0370	0.0370	1.0000e-004		0.0392
Energy	0.0000	0.0000	0.0000	0.0000		0.0000	0.0000		0.0000	0.0000		0.0000	0.0000	0.0000	0.0000	0.0000
Mobile	3.7251	34.4231	61.4578	0.0800	22.8479	0.4347	23.2826	4.0604	0.3997	4.4601		7,994.2418	7,994.2418	0.0718		7,995.7505
Total	**3.7268**	**34.4232**	**61.4755**	**0.0800**	**22.8479**	**0.4348**	**23.2827**	**4.0604**	**0.3998**	**4.4602**		**7,994.2788**	**7,994.2788**	**0.0719**	**0.0000**	**7,995.7897**

	ROG	NOx	CO	SO2	Fugitive PM10	Exhaust PM10	PM10 Total	Fugitive PM2.5	Exhaust PM2.5	PM2.5 Total	Bio- CO2	NBio-CO2	Total CO2	CH4	N20	CO2e
Percent Reduction	0.00	0.00	0.00	0.00	0.00	0.00	0.00	0.00	0.00	0.00	0.00	0.00	0.00	0.00	0.00	0.00

3.0 Construction Detail

Construction Phase

Phase Number	Phase Name	Phase Type	Start Date	End Date	Num Days Week	Num Days	Phase Description
1	Grading	Grading	3/1/2016	9/1/2017	6	472	

Acres of Grading (Site Preparation Phase): 0

Acres of Grading (Grading Phase): 775

Acres of Paving: 0

Residential Indoor: 0; Residential Outdoor: 0; Non-Residential Indoor: 0; Non-Residential Outdoor: 0 (Architectural Coating – sqft)

OffRoad Equipment

Phase Name	Offroad Equipment Type	Amount	Usage Hours	Horse Power	Load Factor
Grading	Crushing/Proc. Equipment	1	8.00	85	0.78
Grading	Excavators	2	8.00	162	0.38
Grading	Off-Highway Trucks	3	4.00	400	0.38
Grading	Rubber Tired Dozers	2	8.00	255	0.40
Grading	Sweepers/Scrubbers	1	4.00	64	0.46

Trips and VMT

Phase Name	Offroad Equipment Count	Worker Trip Number	Vendor Trip Number	Hauling Trip Number	Worker Trip Length	Vendor Trip Length	Hauling Trip Length	Worker Vehicle Class	Vendor Vehicle Class	Hauling Vehicle Class
Grading	9	30.00	0.00	77.00	14.70	6.90	8.00	LD_Mix	HDT_Mix	HHDT

3.1 Mitigation Measures Construction

Water Exposed Area

Water Unpaved Roads

3.2 Grading - 2016

Unmitigated Construction On-Site

	ROG	NOx	CO	SO2	Fugitive PM10	Exhaust PM10	PM10 Total	Fugitive PM2.5	Exhaust PM2.5	PM2.5 Total	Bio- CO2	NBio- CO2	Total CO2	CH4	N2O	CO2e
Category	lb/day										lb/day					
Fugitive Dust					13.7856	0.0000	13.7856	6.8085	0.0000	6.8085			0.0000			0.0000
Off-Road	5.7109	59.9717	40.9319	0.0564		2.9323	2.9323		2.7332	2.7332		5,793.4751	5,793.4751	1.6231		5,827.5597
Total	**5.7109**	**59.9717**	**40.9319**	**0.0564**	**13.7856**	**2.9323**	**16.7179**	**6.8085**	**2.7332**	**9.5417**		**5,793.4751**	**5,793.4751**	**1.6231**		**5,827.5597**

3.2 Grading - 2016

Unmitigated Construction Off-Site

	ROG	NOx	CO	SO2	Fugitive PM10	Exhaust PM10	PM10 Total	Fugitive PM2.5	Exhaust PM2.5	PM2.5 Total	Bio- CO2	NBio- CO2	Total CO2	CH4	N2O	CO2e
Category	lb/day										lb/day					
Hauling	1.9100e-003	0.0209	0.0295	5.0000e-005	0.0310	2.8000e-004	0.0313	3.3800e-003	2.6000e-004	3.6400e-003		5.0608	5.0608	4.0000e-005		5.0617
Vendor	0.0000	0.0000	0.0000	0.0000	0.0000	0.0000	0.0000	0.0000	0.0000	0.0000		0.0000	0.0000	0.0000		0.0000
Worker	0.1390	0.1865	1.9541	4.1100e-003	0.3353	3.1700e-003	0.3385	0.0889	2.9100e-003	0.0919		348.0093	348.0093	0.0201		348.4308
Total	**0.1409**	**0.2074**	**1.9836**	**4.1600e-003**	**0.3663**	**3.4500e-003**	**0.3698**	**0.0923**	**3.1700e-003**	**0.0955**		**353.0701**	**353.0701**	**0.0201**		**353.4925**

Mitigated Construction On-Site

	ROG	NOx	CO	SO2	Fugitive PM10	Exhaust PM10	PM10 Total	Fugitive PM2.5	Exhaust PM2.5	PM2.5 Total	Bio- CO2	NBio- CO2	Total CO2	CH4	N2O	CO2e
Category	lb/day										lb/day					
Fugitive Dust					5.3764	0.0000	5.3764	2.6553	0.0000	2.6553			0.0000			0.0000
Off-Road	5.7109	59.9717	40.9319	0.0564		2.9323	2.9323		2.7332	2.7332	0.0000	5,793.4751	5,793.4751	1.6231		5,827.5597
Total	**5.7109**	**59.9717**	**40.9319**	**0.0564**	**5.3764**	**2.9323**	**8.3087**	**2.6553**	**2.7332**	**5.3885**	**0.0000**	**5,793.4751**	**5,793.4751**	**1.6231**		**5,827.5597**

3.2 Grading - 2016

Mitigated Construction Off-Site

	ROG	NOx	CO	SO2	Fugitive PM10	Exhaust PM10	PM10 Total	Fugitive PM2.5	Exhaust PM2.5	PM2.5 Total	Bio- CO2	NBio- CO2	Total CO2	CH4	N2O	CO2e
Category	lb/day										lb/day					
Hauling	1.9100e-003	0.0209	0.0295	5.0000e-005	0.0310	2.8000e-004	0.0313	3.3800e-003	2.6000e-004	3.6400e-003		5.0608	5.0608	4.0000e-005		5.0617
Vendor	0.0000	0.0000	0.0000	0.0000	0.0000	0.0000	0.0000	0.0000	0.0000	0.0000		0.0000	0.0000	0.0000		0.0000
Worker	0.1390	0.1865	1.9541	4.1100e-003	0.3353	3.1700e-003	0.3385	0.0889	2.9100e-003	0.0919		348.0093	348.0093	0.0201		348.4308
Total	**0.1409**	**0.2074**	**1.9836**	**4.1600e-003**	**0.3663**	**3.4500e-003**	**0.3698**	**0.0923**	**3.1700e-003**	**0.0955**		**353.0701**	**353.0701**	**0.0201**		**353.4925**

3.2 Grading - 2017

Unmitigated Construction On-Site

	ROG	NOx	CO	SO2	Fugitive PM10	Exhaust PM10	PM10 Total	Fugitive PM2.5	Exhaust PM2.5	PM2.5 Total	Bio- CO2	NBio- CO2	Total CO2	CH4	N2O	CO2e
Category	lb/day										lb/day					
Fugitive Dust					13.7856	0.0000	13.7856	6.8085	0.0000	6.8085			0.0000			0.0000
Off-Road	5.3567	55.6962	39.2253	0.0564		2.6895	2.6895		2.5052	2.5052		5,713.3912	5,713.3912	1.6148		5,747.3016
Total	**5.3567**	**55.6962**	**39.2253**	**0.0564**	**13.7856**	**2.6895**	**16.4751**	**6.8085**	**2.5052**	**9.3137**		**5,713.3912**	**5,713.3912**	**1.6148**		**5,747.3016**

3.2 Grading - 2017

Unmitigated Construction Off-Site

	ROG	NOx	CO	SO2	Fugitive PM10	Exhaust PM10	PM10 Total	Fugitive PM2.5	Exhaust PM2.5	PM2.5 Total	Bio- CO2	NBio- CO2	Total CO2	CH4	N2O	CO2e
Category	lb/day										lb/day					
Hauling	1.7700e-003	0.0193	0.0284	5.0000e-005	0.0389	2.5000e-004	0.0392	4.2300e-003	2.3000e-004	4.4600e-003		4.9782	4.9782	4.0000e-005		4.9791
Vendor	0.0000	0.0000	0.0000	0.0000	0.0000	0.0000	0.0000	0.0000	0.0000	0.0000		0.0000	0.0000	0.0000		0.0000
Worker	0.1247	0.1687	1.7633	4.1100e-003	0.3353	3.0400e-003	0.3384	0.0889	2.8000e-003	0.0917		334.9606	334.9606	0.0186		335.3502
Total	**0.1264**	**0.1879**	**1.7917**	**4.1600e-003**	**0.3743**	**3.2900e-003**	**0.3776**	**0.0932**	**3.0300e-003**	**0.0962**		**339.9388**	**339.9388**	**0.0186**		**340.3293**

Mitigated Construction On-Site

	ROG	NOx	CO	SO2	Fugitive PM10	Exhaust PM10	PM10 Total	Fugitive PM2.5	Exhaust PM2.5	PM2.5 Total	Bio- CO2	NBio- CO2	Total CO2	CH4	N2O	CO2e
Category	lb/day										lb/day					
Fugitive Dust					5.3764	0.0000	5.3764	2.6553	0.0000	2.6553			0.0000			0.0000
Off-Road	5.3567	55.6962	39.2253	0.0564		2.6895	2.6895		2.5052	2.5052	0.0000	5,713.3912	5,713.3912	1.6148		5,747.3016
Total	**5.3567**	**55.6962**	**39.2253**	**0.0564**	**5.3764**	**2.6895**	**8.0659**	**2.6553**	**2.5052**	**5.1605**	**0.0000**	**5,713.3912**	**5,713.3912**	**1.6148**		**5,747.3016**

3.2 Grading - 2017

Mitigated Construction Off-Site

	ROG	NOx	CO	SO2	Fugitive PM10	Exhaust PM10	PM10 Total	Fugitive PM2.5	Exhaust PM2.5	PM2.5 Total	Bio- CO2	NBio- CO2	Total CO2	CH4	N2O	CO2e
Category	lb/day										lb/day					
Hauling	1.7700e-003	0.0193	0.0284	5.0000e-005	0.0389	2.5000e-004	0.0392	4.2300e-003	2.3000e-004	4.4600e-003		4.9782	4.9782	4.0000e-005		4.9791
Vendor	0.0000	0.0000	0.0000	0.0000	0.0000	0.0000	0.0000	0.0000	0.0000	0.0000		0.0000	0.0000	0.0000		0.0000
Worker	0.1247	0.1687	1.7633	4.1100e-003	0.3353	3.0400e-003	0.3384	0.0889	2.8000e-003	0.0917		334.9606	334.9606	0.0186		335.3502
Total	**0.1264**	**0.1879**	**1.7917**	**4.1600e-003**	**0.3743**	**3.2900e-003**	**0.3776**	**0.0932**	**3.0300e-003**	**0.0962**		**339.9388**	**339.9388**	**0.0186**		**340.3293**

4.0 Operational Detail - Mobile

4.1 Mitigation Measures Mobile

	ROG	NOx	CO	SO2	Fugitive PM10	Exhaust PM10	PM10 Total	Fugitive PM2.5	Exhaust PM2.5	PM2.5 Total	Bio- CO2	NBio- CO2	Total CO2	CH4	N2O	CO2e
Category	lb/day										lb/day					
Mitigated	3.7251	34.4231	61.4578	0.0800	22.8479	0.4347	23.2826	4.0604	0.3997	4.4601		7,994.2418	7,994.2418	0.0718		7,995.7505
Unmitigated	3.7251	34.4231	61.4578	0.0800	22.8479	0.4347	23.2826	4.0604	0.3997	4.4601		7,994.2418	7,994.2418	0.0718		7,995.7505

4.2 Trip Summary Information

	Average Daily Trip Rate			Unmitigated	Mitigated
Land Use	Weekday	Saturday	Sunday	Annual VMT	Annual VMT
User Defined Industrial	359.97	359.97	0.00	640,171	640,171
Total	359.97	359.97	0.00	640,171	640,171

4.3 Trip Type Information

	Miles			Trip %			Trip Purpose %		
Land Use	H-W or C-W	H-S or C-C	H-O or C-NW	H-W or C-W	H-S or C-C	H-O or C-NW	Primary	Diverted	Pass-by
User Defined Industrial	16.60	5.70	6.90	0.00	100.00	0.00	100	0	0

LDA	LDT1	LDT2	MDV	LHD1	LHD2	MHD	HHD	OBUS	UBUS	MCY	SBUS	MH
0.000000	0.000000	0.000000	0.000000	0.000000	0.000000	0.000000	1.000000	0.000000	0.000000	0.000000	0.000000	0.000000

4.4 Fleet Mix

5.0 Energy Detail

Historical Energy Use: N

5.1 Mitigation Measures Energy

	ROG	NOx	CO	SO2	Fugitive PM10	Exhaust PM10	PM10 Total	Fugitive PM2.5	Exhaust PM2.5	PM2.5 Total	Bio- CO2	NBio- CO2	Total CO2	CH4	N2O	CO2e
Category	lb/day										lb/day					
NaturalGas Mitigated	0.0000	0.0000	0.0000	0.0000		0.0000	0.0000		0.0000	0.0000		0.0000	0.0000	0.0000	0.0000	0.0000
NaturalGas Unmitigated	0.0000	0.0000	0.0000	0.0000		0.0000	0.0000		0.0000	0.0000		0.0000	0.0000	0.0000	0.0000	0.0000

5.2 Energy by Land Use - NaturalGas

Unmitigated

	NaturalGas Use	ROG	NOx	CO	SO2	Fugitive PM10	Exhaust PM10	PM10 Total	Fugitive PM2.5	Exhaust PM2.5	PM2.5 Total	Bio- CO2	NBio- CO2	Total CO2	CH4	N2O	CO2e
Land Use	kBTU/yr	lb/day										lb/day					
User Defined Industrial	0	0.0000	0.0000	0.0000	0.0000		0.0000	0.0000		0.0000	0.0000		0.0000	0.0000	0.0000	0.0000	0.0000
Total		**0.0000**	**0.0000**	**0.0000**	**0.0000**		**0.0000**	**0.0000**		**0.0000**	**0.0000**		**0.0000**	**0.0000**	**0.0000**	**0.0000**	**0.0000**

Mitigated

	NaturalGas Use	ROG	NOx	CO	SO2	Fugitive PM10	Exhaust PM10	PM10 Total	Fugitive PM2.5	Exhaust PM2.5	PM2.5 Total	Bio- CO2	NBio- CO2	Total CO2	CH4	N2O	CO2e
Land Use	kBTU/yr	lb/day										lb/day					
User Defined Industrial	0	0.0000	0.0000	0.0000	0.0000		0.0000	0.0000		0.0000	0.0000		0.0000	0.0000	0.0000	0.0000	0.0000
Total		**0.0000**	**0.0000**	**0.0000**	**0.0000**		**0.0000**	**0.0000**		**0.0000**	**0.0000**		**0.0000**	**0.0000**	**0.0000**	**0.0000**	**0.0000**

6.0 Area Detail

6.1 Mitigation Measures Area

	ROG	NOx	CO	SO2	Fugitive PM10	Exhaust PM10	PM10 Total	Fugitive PM2.5	Exhaust PM2.5	PM2.5 Total	Bio- CO2	NBio- CO2	Total CO2	CH4	N2O	CO2e
Category	lb/day										lb/day					
Mitigated	1.7300e-003	1.7000e-004	0.0177	0.0000		6.0000e-005	6.0000e-005		6.0000e-005	6.0000e-005		0.0370	0.0370	1.0000e-004		0.0392
Unmitigated	1.7300e-003	1.7000e-004	0.0177	0.0000		6.0000e-005	6.0000e-005		6.0000e-005	6.0000e-005		0.0370	0.0370	1.0000e-004		0.0392

6.2 Area by SubCategory

Unmitigated

	ROG	NOx	CO	SO2	Fugitive PM10	Exhaust PM10	PM10 Total	Fugitive PM2.5	Exhaust PM2.5	PM2.5 Total	Bio- CO2	NBio- CO2	Total CO2	CH4	N2O	CO2e
SubCategory	lb/day										lb/day					
Consumer Products	0.0000					0.0000	0.0000		0.0000	0.0000			0.0000			0.0000
Landscaping	1.7300e-003	1.7000e-004	0.0177	0.0000		6.0000e-005	6.0000e-005		6.0000e-005	6.0000e-005		0.0370	0.0370	1.0000e-004		0.0392
Architectural Coating	0.0000					0.0000	0.0000		0.0000	0.0000			0.0000			0.0000
Total	**1.7300e-003**	**1.7000e-004**	**0.0177**	**0.0000**		**6.0000e-005**	**6.0000e-005**		**6.0000e-005**	**6.0000e-005**		**0.0370**	**0.0370**	**1.0000e-004**		**0.0392**

6.2 Area by SubCategory

Mitigated

	ROG	NOx	CO	SO2	Fugitive PM10	Exhaust PM10	PM10 Total	Fugitive PM2.5	Exhaust PM2.5	PM2.5 Total	Bio- CO2	NBio- CO2	Total CO2	CH4	N2O	CO2e
SubCategory	lb/day										lb/day					
Consumer Products	0.0000					0.0000	0.0000		0.0000	0.0000			0.0000			0.0000
Landscaping	1.7300e-003	1.7000e-004	0.0177	0.0000		6.0000e-005	6.0000e-005		6.0000e-005	6.0000e-005		0.0370	0.0370	1.0000e-004		0.0392
Architectural Coating	0.0000					0.0000	0.0000		0.0000	0.0000			0.0000			0.0000
Total	**1.7300e-003**	**1.7000e-004**	**0.0177**	**0.0000**		**6.0000e-005**	**6.0000e-005**		**6.0000e-005**	**6.0000e-005**		**0.0370**	**0.0370**	**1.0000e-004**		**0.0392**

7.0 Water Detail

7.1 Mitigation Measures Water

8.0 Waste Detail

8.1 Mitigation Measures Waste

9.0 Operational Offroad

Equipment Type	Number	Hours/Day	Days/Year	Horse Power	Load Factor	Fuel Type

10.0 Vegetation

APPENDIX C

EMFAC2011 Printouts

EMFAC2011 Emission Rates
Region Type: County
Region: Los Angeles
Calendar Year: 2016
Season: Annual
Vehicle Classification: EMFAC2011 Categories

Region	CalYr	Season	Veh_Class	Fuel	MdlYr	Speed	VMT	ROG_RUNE	TOG_RUNE	CO_RUNEX	NOX_RUNE	CO2_RUNE	CO2_RUNE	PM10_RUN	PM2_5_RU
						(miles/h	(miles/day)	(gms/mile)	(gms/mile)	(gms/mile)	(gms/mile)	(gms/mile)	(gms/mile)	(gms/mile)	(gms/mile)
Los Angele:	2016	Annual	T6 instate construction he	DSL	Aggregatec	10	794.5212	0.775466	0.882809	1.391554	12.56751	2154.814	2079.395	0.134917	0.124124
Los Angele:	2016	Annual	T6 instate construction he	DSL	Aggregatec	40	13228.96	0.084136	0.095782	0.365293	5.551015	1103.44	1064.82	0.044254	0.040714
Los Angele:	2016	Annual	T7 tractor construction	DSL	Aggregatec	10	890.4209	1.720822	1.959025	3.57301	18.7362	3322.733	3206.438	0.185227	0.170408
Los Angele:	2016	Annual	T7 tractor construction	DSL	Aggregatec	40	15124.11	0.199118	0.22668	0.958388	7.950765	1701.444	1641.894	0.079698	0.073322

0.271609

400
480
0.166667

APPENDIX D

AERMOD Model Onsite PM10 Printouts

```
**
****************************************
**
** AERMOD Input Produced by:
** AERMOD View Ver. 8.9.0
** Lakes Environmental Software Inc.
** Date: 6/3/2015
** File: C:\Vista Env\2013\13001 Pacoima\AERMOD\FugitivePM10\FugitivePM10.ADI
**
****************************************
**
**
****************************************
** AERMOD Control Pathway
****************************************
**
**
CO STARTING
   TITLEONE Pacoima Spreading Grounds Improvement Project
   TITLETWO Spreading Basin Area - All PM10 Emissions
   MODELOPT DFAULT CONC
   AVERTIME 24 ANNUAL
   URBANOPT 9862049 Los_Angeles_County
   POLLUTID PM_10
   RUNORNOT RUN
   ERRORFIL FugitivePM10.err
CO FINISHED
**
****************************************
** AERMOD Source Pathway
****************************************
**
**
SO STARTING
** Source Location **
** Source ID - Type - X Coord. - Y Coord. **
   LOCATION ONSITE       AREAPOLY   366783.252  3792092.808      289.230
** DESCRSRC Onsite All PM10 Emissions
** Source Parameters **
   SRCPARAM ONSITE       5.567E-07     3.658        20     7.315
   AREAVERT ONSITE       366783.252 3792092.808 366510.129 3792023.864
   AREAVERT ONSITE       366504.826 3791823.662 366376.219 3791821.010
   AREAVERT ONSITE       366226.088 3791585.349 366222.171 3791475.923
   AREAVERT ONSITE       366209.713 3791446.162 366164.033 3791421.938
   AREAVERT ONSITE       366190.137 3791304.046 366318.562 3791090.718
   AREAVERT ONSITE       366440.580 3790944.460 367104.491 3791493.307
   AREAVERT ONSITE       367023.601 3791655.490 366992.044 3791827.799
   AREAVERT ONSITE       366930.010 3791936.513 367018.447 3792024.858
   AREAVERT ONSITE       367122.265 3792252.877 367075.230 3792266.690
   AREAVERT ONSITE       366959.011 3792100.371 366855.582 3792014.184
   URBANSRC ALL

** Variable Emissions Type: "By Hour-of-Day (HROFDY)"
** Variable Emission Scenario: "Scenario 2"
   EMISFACT ONSITE       HROFDY 0.0 0.0 0.0 0.0 0.0 0.0
   EMISFACT ONSITE       HROFDY 0.0 1.0 1.0 1.0 1.0 1.0
   EMISFACT ONSITE       HROFDY 1.0 1.0 1.0 1.0 1.0 1.0
   EMISFACT ONSITE       HROFDY 1.0 0.0 0.0 0.0 0.0 0.0
   SRCGROUP ALL
SO FINISHED
**
****************************************
** AERMOD Receptor Pathway
```

```
****************************************
**
**
RE STARTING
   INCLUDED FugitivePM10.rou
RE FINISHED
**
****************************************
** AERMOD Meteorology Pathway
****************************************
**
**
ME STARTING
   SURFFILE ..\burk8.sfc
   PROFFILE ..\burk8.PFL
   SURFDATA 0 2008 Burbank 378.62 3782.24
   UAIRDATA 3190 2008
   SITEDATA 99999 2008
   PROFBASE 175.0 METERS
ME FINISHED
**
****************************************
** AERMOD Output Pathway
****************************************
**
**
OU STARTING
   RECTABLE ALLAVE 1ST
   RECTABLE 24 1ST
** Auto-Generated Plotfiles
   PLOTFILE 24 ALL 1ST FUGITIVEPM10.AD\24H1GALL.PLT 31
   PLOTFILE ANNUAL ALL FUGITIVEPM10.AD\AN00GALL.PLT 32
   SUMMFILE FugitivePM10.sum
OU FINISHED
**
****************************************
** Project Parameters
****************************************
** PROJCTN  CoordinateSystemUTM
** DESCPTN  UTM: Universal Transverse Mercator
** DATUM    World Geodetic System 1984
** DTMRGN   Global Definition
** UNITS    m
** ZONE     11
** ZONEINX  0
**
```

```
* AERMOD ( 14134): Pacoima Spreading Grounds Improvement Project                          06/03/15
* AERMET ( 14134):                                                                        14:38:39
* MODELING OPTIONS USED:  RegDFAULT CONC      ELEV
*         PLOT FILE OF  HIGH   1ST HIGH 24-HR VALUES FOR SOURCE GROUP: ALL
*         FOR A TOTAL OF   268 RECEPTORS.
*         FORMAT: (3(1X,F13.5),3(1X,F8.2),3X,A5,2X,A8,2X,A5,5X,A8,2X,I8)
*        X             Y      AVERAGE CONC    ZELEV    ZHILL    ZFLAG    AVE     GRP       RANK     NET ID
DATE(CONC)
* ____________ ____________ ____________ ______ ______ ______ ______ ________ _________ ________ ________
  367030.00000 3792240.00000       2.23809  291.74  291.74   0.00   24-HR  ALL        1ST                12111224
  366644.00000 3792082.00000       3.37234  288.12  288.12   0.00   24-HR  ALL        1ST                12112824
  366494.00000 3791913.00000       3.51019  284.75  284.75   0.00   24-HR  ALL        1ST                12120224
  366294.00000 3791729.00000       3.50749  281.09  281.09   0.00   24-HR  ALL        1ST                12120224
  366214.00000 3791536.00000       3.37118  278.63  278.63   0.00   24-HR  ALL        1ST                12120224
  366272.00000 3791136.00000       2.28170  275.44  275.44   0.00   24-HR  ALL        1ST                 9112924
  366526.00000 3790962.00000       1.98938  274.47  274.47   0.00   24-HR  ALL        1ST                10011524
  367107.00000 3791450.00000       3.62119  282.84  282.84   0.00   24-HR  ALL        1ST                10120724
  367095.00000 3791634.00000       4.39935  284.00  284.00   0.00   24-HR  ALL        1ST                10120724
  367081.00000 3791995.00000       3.07234  288.61  288.61   0.00   24-HR  ALL        1ST                10120724
  367267.00000 3792154.00000       1.73071  292.45  292.45   0.00   24-HR  ALL        1ST                10120724
  366189.59000 3791104.07000       1.45881  274.95  274.95   0.00   24-HR  ALL        1ST                 9112924
  366099.38000 3791247.03000       1.40156  275.48  275.48   0.00   24-HR  ALL        1ST                11121624
  366105.02000 3791050.71000       1.02966  274.01  274.01   0.00   24-HR  ALL        1ST                 9112924
  366014.81000 3791193.67000       1.08064  274.89  274.89   0.00   24-HR  ALL        1ST                11121624
  366020.45000 3790997.34000       0.77511  272.77  272.77   0.00   24-HR  ALL        1ST                 9112924
  365930.24000 3791140.30000       0.87629  274.30  274.30   0.00   24-HR  ALL        1ST                11121624
  365935.88000 3790943.98000       0.60423  272.18  272.18   0.00   24-HR  ALL        1ST                 9112924
  365845.67000 3791086.94000       0.73125  273.71  273.71   0.00   24-HR  ALL        1ST                11121624
  365851.31000 3790890.61000       0.51443  271.59  271.59   0.00   24-HR  ALL        1ST                12122524
  365761.10000 3791033.57000       0.62215  272.72  272.72   0.00   24-HR  ALL        1ST                11121624
  366073.60000 3791341.20000       1.54080  276.50  276.50   0.00   24-HR  ALL        1ST                10121424
  365975.61000 3791321.27000       1.11447  276.27  276.27   0.00   24-HR  ALL        1ST                11103024
  365889.97000 3791240.60000       0.89380  275.38  275.38   0.00   24-HR  ALL        1ST                11121624
  365865.26000 3791362.07000       0.95710  276.53  276.53   0.00   24-HR  ALL        1ST                11103024
  365809.87000 3791176.09000       0.75743  274.10  274.10   0.00   24-HR  ALL        1ST                11121624
  365779.62000 3791281.40000       0.73586  274.81  274.81   0.00   24-HR  ALL        1ST                11103024
  365716.36000 3791145.01000       0.65223  273.96  273.96   0.00   24-HR  ALL        1ST                11121624
  365681.63000 3791261.46000       0.62487  274.58  274.58   0.00   24-HR  ALL        1ST                11121624
  366076.49000 3791464.13000       1.89515  277.83  277.83   0.00   24-HR  ALL        1ST                10121424
  365998.83000 3791527.12000       1.59100  278.50  278.50   0.00   24-HR  ALL        1ST                10121424
  365973.42000 3791423.47000       1.36272  277.37  277.37   0.00   24-HR  ALL        1ST                10121424
  365921.16000 3791590.12000       1.38197  279.17  279.17   0.00   24-HR  ALL        1ST                10121424
  365895.75000 3791486.46000       1.23540  278.04  278.04   0.00   24-HR  ALL        1ST                10121424
  365843.50000 3791653.11000       1.21329  279.34  279.34   0.00   24-HR  ALL        1ST                10121424
  365818.09000 3791549.45000       1.12233  277.90  277.90   0.00   24-HR  ALL        1ST                10121424
  365792.68000 3791445.79000       0.96267  276.59  276.59   0.00   24-HR  ALL        1ST                10121424
  365765.83000 3791716.10000       1.07225  279.51  279.51   0.00   24-HR  ALL        1ST                10121424
  365740.42000 3791612.44000       1.02240  278.38  278.38   0.00   24-HR  ALL        1ST                10121424
  365715.01000 3791508.78000       0.91336  277.26  277.26   0.00   24-HR  ALL        1ST                10121424
  365689.60000 3791405.13000       0.75993  276.13  276.13   0.00   24-HR  ALL        1ST                11103024
  366137.76000 3791532.55000       2.30991  278.58  278.58   0.00   24-HR  ALL        1ST                10121424
  366074.18000 3791605.72000       1.93905  279.36  279.36   0.00   24-HR  ALL        1ST                10121424
  366041.61000 3791701.28000       1.73581  280.39  280.39   0.00   24-HR  ALL        1ST                10121424
  366003.40000 3791792.77000       1.50350  281.00  281.00   0.00   24-HR  ALL        1ST                10121424
  365918.85000 3791731.70000       1.35470  280.70  280.70   0.00   24-HR  ALL        1ST                10121424
  365969.76000 3791887.57000       1.29087  281.39  281.39   0.00   24-HR  ALL        1ST                10121424
  365890.50000 3791830.32000       1.21439  281.00  281.00   0.00   24-HR  ALL        1ST                10121424
  366170.33000 3791697.05000       2.35460  280.36  280.36   0.00   24-HR  ALL        1ST                10121424
  365787.57000 3791832.67000       1.05183  280.77  280.77   0.00   24-HR  ALL        1ST                10121424
  366252.16000 3791821.78000       2.33104  282.30  282.30   0.00   24-HR  ALL        1ST                10121424
  366129.50000 3791817.32000       1.83869  281.13  281.13   0.00   24-HR  ALL        1ST                10121424
  366207.76000 3791936.22000       1.71275  283.15  283.15   0.00   24-HR  ALL        1ST                10121424
  366085.10000 3791931.75000       1.44295  281.89  281.89   0.00   24-HR  ALL        1ST                10121424
  366001.58000 3791986.73000       1.18745  282.47  282.47   0.00   24-HR  ALL        1ST                10121424
  365839.78000 3791922.81000       1.05243  281.76  281.76   0.00   24-HR  ALL        1ST                12110324
  365918.05000 3792041.71000       1.02719  283.05  283.05   0.00   24-HR  ALL        1ST                12110324
  366373.22000 3791926.24000       2.28379  284.88  284.88   0.00   24-HR  ALL        1ST                12112924
  366495.46000 3791928.20000       3.52838  284.92  284.92   0.00   24-HR  ALL        1ST                12120224
  366325.07000 3792013.88000       1.84704  285.53  285.53   0.00   24-HR  ALL        1ST                 8121824
  366432.73000 3792027.20000       2.27937  286.95  286.95   0.00   24-HR  ALL        1ST                12112924
  366323.47000 3792113.87000       1.65561  287.47  287.47   0.00   24-HR  ALL        1ST                 8121824
```

366195.00000	3792056.52000	1.46485	284.52	284.52	0.00	24-HR	ALL	1ST	8121824
366431.13000	3792127.19000	1.93798	288.06	288.06	0.00	24-HR	ALL	1ST	12112924
366321.86000	3792213.86000	1.44961	287.99	287.99	0.00	24-HR	ALL	1ST	8121824
366228.77000	3792189.18000	1.35180	287.12	287.12	0.00	24-HR	ALL	1ST	8121824
366146.85000	3792144.17000	1.27062	285.56	285.56	0.00	24-HR	ALL	1ST	8121824
366076.09000	3792078.84000	1.19395	283.93	283.93	0.00	24-HR	ALL	1ST	10121124
366429.53000	3792227.18000	1.55733	289.31	289.31	0.00	24-HR	ALL	1ST	12112924
366308.62000	3792310.76000	1.23318	289.47	289.47	0.00	24-HR	ALL	1ST	8121824
366192.26000	3792279.91000	1.17956	287.60	287.60	0.00	24-HR	ALL	1ST	8121824
366089.86000	3792223.65000	1.10970	285.65	285.65	0.00	24-HR	ALL	1ST	8121824
366001.41000	3792141.99000	1.05526	284.15	284.15	0.00	24-HR	ALL	1ST	10121124
366427.92000	3792327.17000	1.24556	291.21	291.21	0.00	24-HR	ALL	1ST	12112924
366397.15000	3791832.50000	3.51469	283.82	283.82	0.00	24-HR	ALL	1ST	12112924
366575.11000	3792149.95000	2.18840	288.65	288.65	0.00	24-HR	ALL	1ST	12112924
366668.93000	3792173.57000	2.19696	289.60	289.60	0.00	24-HR	ALL	1ST	11121824
366762.76000	3792197.19000	2.27180	290.25	290.25	0.00	24-HR	ALL	1ST	12111224
366550.70000	3792246.93000	1.62434	290.37	290.37	0.00	24-HR	ALL	1ST	11121824
366644.52000	3792270.55000	1.66617	290.64	290.64	0.00	24-HR	ALL	1ST	11121824
366738.34000	3792294.17000	1.72181	291.83	291.83	0.00	24-HR	ALL	1ST	12111224
366526.28000	3792343.90000	1.31409	291.42	291.42	0.00	24-HR	ALL	1ST	11121824
366620.11000	3792367.52000	1.35537	291.69	291.69	0.00	24-HR	ALL	1ST	11121824
366713.93000	3792391.14000	1.36355	292.66	292.66	0.00	24-HR	ALL	1ST	12111224
366408.05000	3792417.26000	1.02819	291.96	291.96	0.00	24-HR	ALL	1ST	12121224
366501.87000	3792440.88000	1.10290	292.46	292.46	0.00	24-HR	ALL	1ST	11121824
366595.69000	3792464.50000	1.14359	292.84	292.84	0.00	24-HR	ALL	1ST	11121824
366689.52000	3792488.12000	1.10006	294.00	294.00	0.00	24-HR	ALL	1ST	11121824
366317.23000	3792471.96000	0.93102	292.06	292.06	0.00	24-HR	ALL	1ST	8121824
366184.43000	3792387.41000	1.03047	288.64	288.64	0.00	24-HR	ALL	1ST	8121824
366477.46000	3792537.85000	0.94708	293.81	293.81	0.00	24-HR	ALL	1ST	11121824
366571.28000	3792561.47000	1.11265	294.56	294.56	0.00	24-HR	ALL	1ST	11121824
366665.10000	3792585.09000	1.09167	295.10	295.10	0.00	24-HR	ALL	1ST	11121824
366862.54000	3792165.94000	2.41761	290.54	290.54	0.00	24-HR	ALL	1ST	12120124
366932.33000	3792085.91000	3.82354	289.69	289.69	0.00	24-HR	ALL	1ST	12120124
366907.59000	3792251.47000	1.92363	291.95	291.95	0.00	24-HR	ALL	1ST	12111224
366979.16000	3792319.67000	1.66776	293.23	293.23	0.00	24-HR	ALL	1ST	12111224
366836.11000	3792387.67000	1.51752	293.24	293.24	0.00	24-HR	ALL	1ST	12111224
367048.17000	3792257.38000	2.21694	292.16	292.16	0.00	24-HR	ALL	1ST	12111224
367052.26000	3792386.88000	1.43759	293.96	293.96	0.00	24-HR	ALL	1ST	12111224
366943.10000	3792458.17000	1.44009	294.72	294.72	0.00	24-HR	ALL	1ST	12111224
366819.84000	3792484.41000	1.35953	294.97	294.97	0.00	24-HR	ALL	1ST	12111224
367123.54000	3792323.10000	1.69162	293.34	293.34	0.00	24-HR	ALL	1ST	12122324
367126.11000	3792453.60000	1.26281	295.46	295.46	0.00	24-HR	ALL	1ST	10101924
367050.31000	3792503.10000	1.31086	295.29	295.29	0.00	24-HR	ALL	1ST	12111224
366974.51000	3792552.61000	1.28782	295.74	295.74	0.00	24-HR	ALL	1ST	12111224
366846.10000	3792579.94000	1.21912	296.03	296.03	0.00	24-HR	ALL	1ST	12111224
366755.60000	3792582.52000	1.08871	295.28	295.28	0.00	24-HR	ALL	1ST	12111224
367198.90000	3792388.83000	1.32063	295.01	295.01	0.00	24-HR	ALL	1ST	12122324
366792.31000	3792096.48000	4.18126	289.39	289.39	0.00	24-HR	ALL	1ST	12120124
367147.25000	3792560.30000	1.10740	297.18	297.18	0.00	24-HR	ALL	1ST	10101924
367112.95000	3792654.23000	1.07843	298.59	298.59	0.00	24-HR	ALL	1ST	12111224
366995.52000	3792648.16000	1.17327	297.56	297.56	0.00	24-HR	ALL	1ST	12111224
367243.10000	3792639.28000	0.92530	299.13	299.13	0.00	24-HR	ALL	1ST	10101924
367122.70000	3792750.44000	0.99320	299.87	299.87	0.00	24-HR	ALL	1ST	12111224
366975.90000	3792742.85000	1.07604	298.80	298.80	0.00	24-HR	ALL	1ST	12111224
366843.93000	3792694.67000	1.06254	297.78	297.78	0.00	24-HR	ALL	1ST	12111224
367267.52000	3792736.25000	0.85820	300.74	300.74	0.00	24-HR	ALL	1ST	10101924
367236.79000	3792266.23000	1.46821	294.06	294.06	0.00	24-HR	ALL	1ST	11111224
367334.23000	3792243.75000	1.31533	293.92	293.92	0.00	24-HR	ALL	1ST	10120724
367431.67000	3792221.28000	1.30665	294.25	294.25	0.00	24-HR	ALL	1ST	10120724
367413.49000	3792333.23000	1.18418	295.73	295.73	0.00	24-HR	ALL	1ST	11111224
367370.92000	3792430.27000	1.12481	296.36	296.36	0.00	24-HR	ALL	1ST	11111224
367279.58000	3792497.49000	1.05256	297.19	297.19	0.00	24-HR	ALL	1ST	10102124
367528.25000	3792204.13000	1.26106	294.45	294.45	0.00	24-HR	ALL	1ST	10120724
367507.47000	3792332.08000	1.06852	296.47	296.47	0.00	24-HR	ALL	1ST	8110124
367451.89000	3792485.63000	1.02123	298.37	298.37	0.00	24-HR	ALL	1ST	11111224
367347.50000	3792562.45000	0.93445	297.91	297.91	0.00	24-HR	ALL	1ST	10102124
367625.88000	3792180.47000	1.22322	294.82	294.82	0.00	24-HR	ALL	1ST	10120724
367605.68000	3792304.86000	1.03951	296.32	296.32	0.00	24-HR	ALL	1ST	10120724
367585.48000	3792429.25000	0.96816	298.50	298.50	0.00	24-HR	ALL	1ST	11111224
367538.18000	3792537.07000	0.93468	299.28	299.28	0.00	24-HR	ALL	1ST	11111224
367436.69000	3792611.76000	0.82733	299.49	299.49	0.00	24-HR	ALL	1ST	10102124

367138.03000	3792115.65000	2.52791	291.05	291.05	0.00	24-HR	ALL	1ST	10120724
367218.18000	3792165.58000	1.87195	292.32	292.32	0.00	24-HR	ALL	1ST	10120724
367115.23000	3792018.29000	2.77202	288.99	288.99	0.00	24-HR	ALL	1ST	10120724
367216.12000	3792034.94000	2.17936	290.24	290.24	0.00	24-HR	ALL	1ST	10120724
367285.91000	3792101.50000	1.80741	291.82	291.82	0.00	24-HR	ALL	1ST	10120724
367092.44000	3791920.92000	3.10110	287.65	287.65	0.00	24-HR	ALL	1ST	10120724
367193.33000	3791937.57000	2.48051	289.12	289.12	0.00	24-HR	ALL	1ST	10120724
367309.07000	3791975.02000	1.99767	289.55	289.55	0.00	24-HR	ALL	1ST	10120724
367368.50000	3792058.23000	1.70243	291.07	291.07	0.00	24-HR	ALL	1ST	10120724
367069.65000	3791823.55000	3.84636	286.26	286.26	0.00	24-HR	ALL	1ST	10120724
367170.53000	3791840.20000	2.86592	287.12	287.12	0.00	24-HR	ALL	1ST	10120724
367271.42000	3791856.85000	2.33768	288.26	288.26	0.00	24-HR	ALL	1ST	10120724
367361.94000	3791890.14000	1.98018	288.79	288.79	0.00	24-HR	ALL	1ST	10120724
367421.37000	3791973.35000	1.72349	290.55	290.55	0.00	24-HR	ALL	1ST	10120724
367480.79000	3792056.55000	1.50031	292.22	292.22	0.00	24-HR	ALL	1ST	10120724
367046.85000	3791726.18000	4.84335	284.81	284.81	0.00	24-HR	ALL	1ST	10120724
367147.74000	3791742.83000	3.31010	285.49	285.49	0.00	24-HR	ALL	1ST	10120724
367248.62000	3791759.48000	2.59767	286.37	286.37	0.00	24-HR	ALL	1ST	10120724
367349.51000	3791776.13000	2.12505	286.86	286.86	0.00	24-HR	ALL	1ST	10120724
367429.67000	3791826.06000	1.83277	288.09	288.09	0.00	24-HR	ALL	1ST	10120724
367489.09000	3791909.27000	1.63616	289.85	289.85	0.00	24-HR	ALL	1ST	10120724
367548.52000	3791992.47000	1.45716	291.69	291.69	0.00	24-HR	ALL	1ST	10120724
367607.95000	3792075.68000	1.29467	293.36	293.36	0.00	24-HR	ALL	1ST	10120724
367224.16000	3791655.67000	2.86386	285.08	285.08	0.00	24-HR	ALL	1ST	10120724
367382.18000	3791675.47000	1.97213	285.86	285.86	0.00	24-HR	ALL	1ST	10120724
367296.14000	3791586.25000	2.28008	284.34	284.34	0.00	24-HR	ALL	1ST	10120724
367014.86000	3791995.11000	4.15592	288.44	288.44	0.00	24-HR	ALL	1ST	10120724
367518.41000	3791796.26000	1.58865	288.84	288.84	0.00	24-HR	ALL	1ST	10120724
367529.79000	3791699.50000	1.49500	287.39	287.39	0.00	24-HR	ALL	1ST	10120724
367201.26000	3791534.06000	2.93039	283.76	283.76	0.00	24-HR	ALL	1ST	10120724
367175.42000	3791412.71000	2.32103	282.44	282.44	0.00	24-HR	ALL	1ST	8010224
367100.98000	3791351.05000	2.45848	281.76	281.76	0.00	24-HR	ALL	1ST	10010924
367026.54000	3791289.40000	2.48613	281.08	281.08	0.00	24-HR	ALL	1ST	10010924
366952.10000	3791227.75000	2.41907	280.41	280.41	0.00	24-HR	ALL	1ST	10010924
366877.67000	3791166.10000	2.31060	279.73	279.73	0.00	24-HR	ALL	1ST	10010924
366803.23000	3791104.44000	2.15347	278.16	278.16	0.00	24-HR	ALL	1ST	10010924
366728.79000	3791042.79000	1.96166	277.37	277.37	0.00	24-HR	ALL	1ST	10011524
366654.35000	3790981.14000	1.77891	275.89	275.89	0.00	24-HR	ALL	1ST	10011524
366579.91000	3790919.49000	1.47386	274.25	274.25	0.00	24-HR	ALL	1ST	10011524
366505.48000	3790857.84000	1.16536	273.34	273.34	0.00	24-HR	ALL	1ST	8112024
367273.22000	3791391.88000	1.69436	282.23	282.23	0.00	24-HR	ALL	1ST	9112624
367164.77000	3791274.04000	1.84584	280.94	280.94	0.00	24-HR	ALL	1ST	10010924
367090.33000	3791212.39000	1.88471	280.26	280.26	0.00	24-HR	ALL	1ST	10010924
367015.89000	3791150.73000	1.83254	279.58	279.58	0.00	24-HR	ALL	1ST	10010924
366941.45000	3791089.08000	1.73450	278.91	278.91	0.00	24-HR	ALL	1ST	10010924
366867.01000	3791027.43000	1.60016	278.18	278.18	0.00	24-HR	ALL	1ST	10010924
366792.58000	3790965.78000	1.41921	276.55	276.55	0.00	24-HR	ALL	1ST	10010924
366718.14000	3790904.12000	1.25488	275.87	275.87	0.00	24-HR	ALL	1ST	10011524
366643.70000	3790842.47000	1.06805	274.27	274.27	0.00	24-HR	ALL	1ST	10011524
366569.26000	3790780.82000	0.88519	272.63	272.63	0.00	24-HR	ALL	1ST	10011524
367337.01000	3791314.86000	1.28115	281.41	281.41	0.00	24-HR	ALL	1ST	9112624
367396.87000	3791492.41000	1.55682	283.34	283.34	0.00	24-HR	ALL	1ST	9112624
367228.55000	3791197.02000	1.48328	280.12	280.12	0.00	24-HR	ALL	1ST	10010924
367154.11000	3791135.37000	1.51809	279.44	279.44	0.00	24-HR	ALL	1ST	10010924
367079.68000	3791073.72000	1.47804	278.76	278.76	0.00	24-HR	ALL	1ST	10010924
367005.24000	3791012.07000	1.39188	278.08	278.08	0.00	24-HR	ALL	1ST	10010924
366930.80000	3790950.41000	1.27285	277.40	277.40	0.00	24-HR	ALL	1ST	10010924
366856.36000	3790888.76000	1.12049	276.57	276.57	0.00	24-HR	ALL	1ST	10010924
366781.93000	3790827.11000	0.94148	275.05	275.05	0.00	24-HR	ALL	1ST	10011524
366707.49000	3790765.46000	0.83514	274.29	274.29	0.00	24-HR	ALL	1ST	10011524
366633.05000	3790703.81000	0.74672	272.36	272.36	0.00	24-HR	ALL	1ST	10011724
367412.14000	3791256.58000	1.06797	280.79	280.79	0.00	24-HR	ALL	1ST	10010924
367491.96000	3791493.30000	1.32457	283.73	283.73	0.00	24-HR	ALL	1ST	9112624
367292.34000	3791120.01000	1.23429	279.29	279.29	0.00	24-HR	ALL	1ST	10010924
367217.90000	3791058.36000	1.26258	278.62	278.62	0.00	24-HR	ALL	1ST	10010924
367143.46000	3790996.70000	1.23169	277.94	277.94	0.00	24-HR	ALL	1ST	10010924
367069.03000	3790935.05000	1.15854	277.26	277.26	0.00	24-HR	ALL	1ST	10010924
366994.59000	3790873.40000	1.05608	276.85	276.85	0.00	24-HR	ALL	1ST	10010924
366920.15000	3790811.75000	0.92610	275.90	275.90	0.00	24-HR	ALL	1ST	10010924
366845.71000	3790750.10000	0.76797	274.95	274.95	0.00	24-HR	ALL	1ST	10010924
366771.27000	3790688.44000	0.68600	273.55	273.55	0.00	24-HR	ALL	1ST	11011624

366696.84000	3790626.79000	0.65809	272.38	272.38	0.00	24-HR	ALL	1ST	10011724
367473.09000	3791174.88000	0.93412	280.74	280.74	0.00	24-HR	ALL	1ST	10010924
367558.14000	3791315.34000	0.98218	282.35	282.35	0.00	24-HR	ALL	1ST	9112624
367590.44000	3791467.04000	1.12457	284.09	284.09	0.00	24-HR	ALL	1ST	9112624
367356.13000	3791042.99000	1.05019	278.47	278.47	0.00	24-HR	ALL	1ST	10010924
367281.69000	3790981.34000	1.07296	277.79	277.79	0.00	24-HR	ALL	1ST	10010924
367207.25000	3790919.69000	1.04917	277.11	277.11	0.00	24-HR	ALL	1ST	10010924
367132.81000	3790858.04000	0.98944	277.00	277.00	0.00	24-HR	ALL	1ST	10010924
367058.37000	3790796.39000	0.90233	276.76	276.76	0.00	24-HR	ALL	1ST	10010924
366983.94000	3790734.73000	0.79150	275.61	275.61	0.00	24-HR	ALL	1ST	10010924
366909.50000	3790673.08000	0.66032	274.40	274.40	0.00	24-HR	ALL	1ST	11122524
366835.06000	3790611.43000	0.59285	273.17	273.17	0.00	24-HR	ALL	1ST	12020424
366760.62000	3790549.78000	0.58087	271.71	271.71	0.00	24-HR	ALL	1ST	10011724
366366.76000	3790868.62000	1.25983	272.86	272.86	0.00	24-HR	ALL	1ST	8112024
366301.28000	3790942.71000	1.37385	273.82	273.82	0.00	24-HR	ALL	1ST	9112924
366235.80000	3791016.79000	1.41218	274.01	274.01	0.00	24-HR	ALL	1ST	9112924
366359.01000	3790768.93000	1.02795	271.35	271.35	0.00	24-HR	ALL	1ST	8112024
366226.35000	3790876.48000	1.08942	272.50	272.50	0.00	24-HR	ALL	1ST	9112924
366160.87000	3790950.57000	1.08152	273.12	273.12	0.00	24-HR	ALL	1ST	9112924
366284.08000	3790702.70000	0.85994	270.62	270.62	0.00	24-HR	ALL	1ST	8112024
366489.97000	3790658.44000	0.78351	270.29	270.29	0.00	24-HR	ALL	1ST	8112024
366151.43000	3790810.26000	0.90809	271.44	271.44	0.00	24-HR	ALL	1ST	9112924
366085.95000	3790884.34000	0.87564	271.56	271.56	0.00	24-HR	ALL	1ST	9112924
366209.15000	3790636.48000	0.71102	269.90	269.90	0.00	24-HR	ALL	1ST	8112024
366343.50000	3790569.53000	0.75202	269.19	269.19	0.00	24-HR	ALL	1ST	8112024
366482.21000	3790558.74000	0.67463	269.10	269.10	0.00	24-HR	ALL	1ST	8112024
366076.50000	3790744.03000	0.77269	270.04	270.04	0.00	24-HR	ALL	1ST	9112924
366011.02000	3790818.12000	0.72953	270.83	270.83	0.00	24-HR	ALL	1ST	9112924
366151.02000	3790561.88000	0.62520	269.08	269.08	0.00	24-HR	ALL	1ST	9112924
366234.98000	3790520.04000	0.66321	268.64	268.64	0.00	24-HR	ALL	1ST	8112024
366318.95000	3790478.20000	0.66657	268.20	268.20	0.00	24-HR	ALL	1ST	8112024
366492.34000	3790464.71000	0.57969	268.08	268.08	0.00	24-HR	ALL	1ST	8112024
366581.77000	3790493.07000	0.54374	268.74	268.74	0.00	24-HR	ALL	1ST	10011724
366671.20000	3790521.42000	0.58138	270.22	270.22	0.00	24-HR	ALL	1ST	10011724
366067.05000	3790603.72000	0.66051	269.13	269.13	0.00	24-HR	ALL	1ST	9112924
366001.57000	3790677.81000	0.66732	269.31	269.31	0.00	24-HR	ALL	1ST	9112924
365936.09000	3790751.89000	0.61775	270.10	270.10	0.00	24-HR	ALL	1ST	9112924
366441.69000	3790934.85000	1.75202	274.16	274.16	0.00	24-HR	ALL	1ST	8112024
367111.63000	3791489.72000	4.55084	283.27	283.27	0.00	24-HR	ALL	1ST	10120724
367032.23000	3791650.21000	5.99382	284.00	284.00	0.00	24-HR	ALL	1ST	10120724
367026.80000	3791705.02000	5.66364	284.58	284.58	0.00	24-HR	ALL	1ST	10120724
367004.60000	3791824.64000	5.41347	285.87	285.87	0.00	24-HR	ALL	1ST	10120724
366979.97000	3791877.66000	5.18757	286.44	286.44	0.00	24-HR	ALL	1ST	10120724
366936.23000	3791933.33000	5.64766	287.08	287.08	0.00	24-HR	ALL	1ST	10120724
367022.27000	3792022.55000	4.64599	289.02	289.02	0.00	24-HR	ALL	1ST	10120724
367109.97000	3792214.86000	3.23640	292.02	292.02	0.00	24-HR	ALL	1ST	10120724
367135.60000	3792208.86000	2.45304	292.29	292.29	0.00	24-HR	ALL	1ST	10120724
367145.41000	3792251.39000	2.02773	292.87	292.87	0.00	24-HR	ALL	1ST	11111224
367073.98000	3792269.38000	2.46025	292.52	292.52	0.00	24-HR	ALL	1ST	12122324
366953.47000	3792101.98000	3.68974	289.87	289.87	0.00	24-HR	ALL	1ST	12120124
366856.96000	3792020.19000	5.22455	288.58	288.58	0.00	24-HR	ALL	1ST	12120124
366787.17000	3792100.22000	4.03787	289.41	289.41	0.00	24-HR	ALL	1ST	12120124
366505.70000	3792029.36000	3.49181	287.01	287.01	0.00	24-HR	ALL	1ST	12112924
366497.06000	3791828.21000	3.92507	283.83	283.83	0.00	24-HR	ALL	1ST	12120224
366374.82000	3791826.25000	3.61209	283.67	283.67	0.00	24-HR	ALL	1ST	12112924
366257.42000	3791647.90000	3.74902	279.85	279.85	0.00	24-HR	ALL	1ST	12120224
366223.02000	3791586.94000	3.65406	279.18	279.18	0.00	24-HR	ALL	1ST	12120224
366218.11000	3791478.88000	3.52337	278.01	278.01	0.00	24-HR	ALL	1ST	12120224
366207.45000	3791452.00000	3.48247	277.72	277.72	0.00	24-HR	ALL	1ST	12120224
366173.15000	3791439.02000	3.07719	277.57	277.57	0.00	24-HR	ALL	1ST	12120224
366159.24000	3791421.87000	2.99137	277.39	277.39	0.00	24-HR	ALL	1ST	12120224
366183.95000	3791300.40000	2.39428	277.00	277.00	0.00	24-HR	ALL	1ST	12120224
366274.16000	3791157.44000	2.56147	275.64	275.64	0.00	24-HR	ALL	1ST	9112924
366310.73000	3791083.02000	2.29902	275.44	275.44	0.00	24-HR	ALL	1ST	9112924

** CONCUNIT ug/m^3
** DEPUNIT g/m^2

APPENDIX E

AERMOD Model Onsite PM2.5 Printouts

```
**
****************************************
**
** AERMOD Input Produced by:
** AERMOD View Ver. 8.9.0
** Lakes Environmental Software Inc.
** Date: 6/3/2015
** File: C:\Vista Env\2013\13001 Pacoima\AERMOD\FugitivePM25\FugitivePM25.ADI
**
****************************************
**
**
****************************************
** AERMOD Control Pathway
****************************************
**
**
CO STARTING
   TITLEONE Pacoima Spreading Grounds Improvement Project  All PM2.5 Emissions
   TITLETWO Spreading Basin Area - All PM2.5 Emissions
   MODELOPT DFAULT CONC
   AVERTIME 24 ANNUAL
   URBANOPT 9862049 Los_Angeles_County
   POLLUTID PM_2.5
   RUNORNOT RUN
   ERRORFIL FugitivePM25.err
CO FINISHED
**
****************************************
** AERMOD Source Pathway
****************************************
**
**
SO STARTING
** Source Location **
** Source ID - Type - X Coord. - Y Coord. **
   LOCATION ONSITE       AREAPOLY   366783.252  3792092.808      289.230
** DESCRSRC Onsite All PM2.5 Emissions
** Source Parameters **
   SRCPARAM ONSITE       2.242E-07     3.658        20     7.315
   AREAVERT ONSITE       366783.252 3792092.808 366510.129 3792023.864
   AREAVERT ONSITE       366504.826 3791823.662 366376.219 3791821.010
   AREAVERT ONSITE       366226.088 3791585.349 366222.171 3791475.923
   AREAVERT ONSITE       366209.713 3791446.162 366164.033 3791421.938
   AREAVERT ONSITE       366190.137 3791304.046 366318.562 3791090.718
   AREAVERT ONSITE       366440.580 3790944.460 367104.491 3791493.307
   AREAVERT ONSITE       367023.601 3791655.490 366992.044 3791827.799
   AREAVERT ONSITE       366930.010 3791936.513 367018.447 3792024.858
   AREAVERT ONSITE       367122.265 3792252.877 367075.230 3792266.690
   AREAVERT ONSITE       366959.011 3792100.371 366855.582 3792014.184
   URBANSRC ALL

** Variable Emissions Type: "By Hour-of-Day (HROFDY)"
** Variable Emission Scenario: "Scenario 2"
   EMISFACT ONSITE       HROFDY 0.0 0.0 0.0 0.0 0.0 0.0
   EMISFACT ONSITE       HROFDY 0.0 1.0 1.0 1.0 1.0 1.0
   EMISFACT ONSITE       HROFDY 1.0 1.0 1.0 1.0 1.0 1.0
   EMISFACT ONSITE       HROFDY 1.0 0.0 0.0 0.0 0.0 0.0
   SRCGROUP ALL
SO FINISHED
**
****************************************
** AERMOD Receptor Pathway
```

```
****************************************
**
**
RE STARTING
   INCLUDED FugitivePM25.rou
RE FINISHED
**
****************************************
** AERMOD Meteorology Pathway
****************************************
**
**
ME STARTING
   SURFFILE ..\burk8.sfc
   PROFFILE ..\burk8.PFL
   SURFDATA 0 2008 Burbank 378.62 3782.24
   UAIRDATA 3190 2008
   SITEDATA 99999 2008
   PROFBASE 175.0 METERS
ME FINISHED
**
****************************************
** AERMOD Output Pathway
****************************************
**
**
OU STARTING
   RECTABLE ALLAVE 1ST
   RECTABLE 24 1ST
** Auto-Generated Plotfiles
   PLOTFILE 24 ALL 1ST FUGITIVEPM25.AD\24H1GALL.PLT 31
   PLOTFILE ANNUAL ALL FUGITIVEPM25.AD\AN00GALL.PLT 32
   SUMMFILE FugitivePM25.sum
OU FINISHED
**
****************************************
** Project Parameters
****************************************
** PROJCTN  CoordinateSystemUTM
** DESCPTN  UTM: Universal Transverse Mercator
** DATUM    World Geodetic System 1984
** DTMRGN   Global Definition
** UNITS    m
** ZONE     11
** ZONEINX  0
**
```

```
* AERMOD ( 14134): Pacoima Spreading Grounds Improvement Project  All PM2.5 Emissions       06/03/15
* AERMET ( 14134):                                                                          14:56:06
* MODELING OPTIONS USED:  RegDFAULT CONC      ELEV
*         PLOT FILE OF  HIGH   1ST HIGH 24-HR VALUES FOR SOURCE GROUP: ALL
*         FOR A TOTAL OF   268 RECEPTORS.
*         FORMAT: (3(1X,F13.5),3(1X,F8.2),3X,A5,2X,A8,2X,A5,5X,A8,2X,I8)
*        X             Y      AVERAGE CONC    ZELEV    ZHILL    ZFLAG    AVE     GRP       RANK     NET ID
DATE(CONC)
*
```

X	Y	AVERAGE CONC	ZELEV	ZHILL	ZFLAG	AVE	GRP	RANK	NET ID	DATE(CONC)
367030.00000	3792240.00000	0.90135	291.74	291.74	0.00	24-HR	ALL	1ST		12111224
366644.00000	3792082.00000	1.35815	288.12	288.12	0.00	24-HR	ALL	1ST		12112824
366494.00000	3791913.00000	1.41366	284.75	284.75	0.00	24-HR	ALL	1ST		12120224
366294.00000	3791729.00000	1.41257	281.09	281.09	0.00	24-HR	ALL	1ST		12120224
366214.00000	3791536.00000	1.35768	278.63	278.63	0.00	24-HR	ALL	1ST		12120224
366272.00000	3791136.00000	0.91891	275.44	275.44	0.00	24-HR	ALL	1ST		9112924
366526.00000	3790962.00000	0.80118	274.47	274.47	0.00	24-HR	ALL	1ST		10011524
367107.00000	3791450.00000	1.45836	282.84	282.84	0.00	24-HR	ALL	1ST		10120724
367095.00000	3791634.00000	1.77175	284.00	284.00	0.00	24-HR	ALL	1ST		10120724
367081.00000	3791995.00000	1.23733	288.61	288.61	0.00	24-HR	ALL	1ST		10120724
367267.00000	3792154.00000	0.69701	292.45	292.45	0.00	24-HR	ALL	1ST		10120724
366189.59000	3791104.07000	0.58751	274.95	274.95	0.00	24-HR	ALL	1ST		9112924
366099.38000	3791247.03000	0.56445	275.48	275.48	0.00	24-HR	ALL	1ST		11121624
366105.02000	3791050.71000	0.41468	274.01	274.01	0.00	24-HR	ALL	1ST		9112924
366014.81000	3791193.67000	0.43521	274.89	274.89	0.00	24-HR	ALL	1ST		11121624
366020.45000	3790997.34000	0.31216	272.77	272.77	0.00	24-HR	ALL	1ST		9112924
365930.24000	3791140.30000	0.35291	274.30	274.30	0.00	24-HR	ALL	1ST		11121624
365935.88000	3790943.98000	0.24334	272.18	272.18	0.00	24-HR	ALL	1ST		9112924
365845.67000	3791086.94000	0.29450	273.71	273.71	0.00	24-HR	ALL	1ST		11121624
365851.31000	3790890.61000	0.20718	271.59	271.59	0.00	24-HR	ALL	1ST		12122524
365761.10000	3791033.57000	0.25056	272.72	272.72	0.00	24-HR	ALL	1ST		11121624
366073.60000	3791341.20000	0.62053	276.50	276.50	0.00	24-HR	ALL	1ST		10121424
365975.61000	3791321.27000	0.44883	276.27	276.27	0.00	24-HR	ALL	1ST		11103024
365889.97000	3791240.60000	0.35996	275.38	275.38	0.00	24-HR	ALL	1ST		11121624
365865.26000	3791362.07000	0.38545	276.53	276.53	0.00	24-HR	ALL	1ST		11103024
365809.87000	3791176.09000	0.30504	274.10	274.10	0.00	24-HR	ALL	1ST		11121624
365779.62000	3791281.40000	0.29635	274.81	274.81	0.00	24-HR	ALL	1ST		11103024
365716.36000	3791145.01000	0.26267	273.96	273.96	0.00	24-HR	ALL	1ST		11121624
365681.63000	3791261.46000	0.25165	274.58	274.58	0.00	24-HR	ALL	1ST		11121624
366076.49000	3791464.13000	0.76323	277.83	277.83	0.00	24-HR	ALL	1ST		10121424
365998.83000	3791527.12000	0.64075	278.50	278.50	0.00	24-HR	ALL	1ST		10121424
365973.42000	3791423.47000	0.54881	277.37	277.37	0.00	24-HR	ALL	1ST		10121424
365921.16000	3791590.12000	0.55656	279.17	279.17	0.00	24-HR	ALL	1ST		10121424
365895.75000	3791486.46000	0.49753	278.04	278.04	0.00	24-HR	ALL	1ST		10121424
365843.50000	3791653.11000	0.48863	279.34	279.34	0.00	24-HR	ALL	1ST		10121424
365818.09000	3791549.45000	0.45200	277.90	277.90	0.00	24-HR	ALL	1ST		10121424
365792.68000	3791445.79000	0.38770	276.59	276.59	0.00	24-HR	ALL	1ST		10121424
365765.83000	3791716.10000	0.43183	279.51	279.51	0.00	24-HR	ALL	1ST		10121424
365740.42000	3791612.44000	0.41175	278.38	278.38	0.00	24-HR	ALL	1ST		10121424
365715.01000	3791508.78000	0.36784	277.26	277.26	0.00	24-HR	ALL	1ST		10121424
365689.60000	3791405.13000	0.30605	276.13	276.13	0.00	24-HR	ALL	1ST		11103024
366137.76000	3791532.55000	0.93027	278.58	278.58	0.00	24-HR	ALL	1ST		10121424
366074.18000	3791605.72000	0.78091	279.36	279.36	0.00	24-HR	ALL	1ST		10121424
366041.61000	3791701.28000	0.69906	280.39	280.39	0.00	24-HR	ALL	1ST		10121424
366003.40000	3791792.77000	0.60551	281.00	281.00	0.00	24-HR	ALL	1ST		10121424
365918.85000	3791731.70000	0.54558	280.70	280.70	0.00	24-HR	ALL	1ST		10121424
365969.76000	3791887.57000	0.51987	281.39	281.39	0.00	24-HR	ALL	1ST		10121424
365890.50000	3791830.32000	0.48907	281.00	281.00	0.00	24-HR	ALL	1ST		10121424
366170.33000	3791697.05000	0.94827	280.36	280.36	0.00	24-HR	ALL	1ST		10121424
365787.57000	3791832.67000	0.42360	280.77	280.77	0.00	24-HR	ALL	1ST		10121424
366252.16000	3791821.78000	0.93878	282.30	282.30	0.00	24-HR	ALL	1ST		10121424
366129.50000	3791817.32000	0.74050	281.13	281.13	0.00	24-HR	ALL	1ST		10121424
366207.76000	3791936.22000	0.68978	283.15	283.15	0.00	24-HR	ALL	1ST		10121424
366085.10000	3791931.75000	0.58112	281.89	281.89	0.00	24-HR	ALL	1ST		10121424
366001.58000	3791986.73000	0.47822	282.47	282.47	0.00	24-HR	ALL	1ST		10121424
365839.78000	3791922.81000	0.42385	281.76	281.76	0.00	24-HR	ALL	1ST		12110324
365918.05000	3792041.71000	0.41368	283.05	283.05	0.00	24-HR	ALL	1ST		12110324
366373.22000	3791926.24000	0.91975	284.88	284.88	0.00	24-HR	ALL	1ST		12112924
366495.46000	3791928.20000	1.42099	284.92	284.92	0.00	24-HR	ALL	1ST		12120224
366325.07000	3792013.88000	0.74386	285.53	285.53	0.00	24-HR	ALL	1ST		8121824
366432.73000	3792027.20000	0.91797	286.95	286.95	0.00	24-HR	ALL	1ST		12112924
366323.47000	3792113.87000	0.66676	287.47	287.47	0.00	24-HR	ALL	1ST		8121824

366195.00000	3792056.52000	0.58994	284.52	284.52	0.00	24-HR	ALL	1ST	8121824
366431.13000	3792127.19000	0.78048	288.06	288.06	0.00	24-HR	ALL	1ST	12112924
366321.86000	3792213.86000	0.58380	287.99	287.99	0.00	24-HR	ALL	1ST	8121824
366228.77000	3792189.18000	0.54441	287.12	287.12	0.00	24-HR	ALL	1ST	8121824
366146.85000	3792144.17000	0.51172	285.56	285.56	0.00	24-HR	ALL	1ST	8121824
366076.09000	3792078.84000	0.48084	283.93	283.93	0.00	24-HR	ALL	1ST	10121124
366429.53000	3792227.18000	0.62718	289.31	289.31	0.00	24-HR	ALL	1ST	12112924
366308.62000	3792310.76000	0.49664	289.47	289.47	0.00	24-HR	ALL	1ST	8121824
366192.26000	3792279.91000	0.47505	287.60	287.60	0.00	24-HR	ALL	1ST	8121824
366089.86000	3792223.65000	0.44691	285.65	285.65	0.00	24-HR	ALL	1ST	8121824
366001.41000	3792141.99000	0.42499	284.15	284.15	0.00	24-HR	ALL	1ST	10121124
366427.92000	3792327.17000	0.50163	291.21	291.21	0.00	24-HR	ALL	1ST	12112924
366397.15000	3791832.50000	1.41547	283.82	283.82	0.00	24-HR	ALL	1ST	12112924
366575.11000	3792149.95000	0.88133	288.65	288.65	0.00	24-HR	ALL	1ST	12112924
366668.93000	3792173.57000	0.88478	289.60	289.60	0.00	24-HR	ALL	1ST	11121824
366762.76000	3792197.19000	0.91492	290.25	290.25	0.00	24-HR	ALL	1ST	12111224
366550.70000	3792246.93000	0.65417	290.37	290.37	0.00	24-HR	ALL	1ST	11121824
366644.52000	3792270.55000	0.67102	290.64	290.64	0.00	24-HR	ALL	1ST	11121824
366738.34000	3792294.17000	0.69342	291.83	291.83	0.00	24-HR	ALL	1ST	12111224
366526.28000	3792343.90000	0.52922	291.42	291.42	0.00	24-HR	ALL	1ST	11121824
366620.11000	3792367.52000	0.54585	291.69	291.69	0.00	24-HR	ALL	1ST	11121824
366713.93000	3792391.14000	0.54914	292.66	292.66	0.00	24-HR	ALL	1ST	12111224
366408.05000	3792417.26000	0.41408	291.96	291.96	0.00	24-HR	ALL	1ST	12121224
366501.87000	3792440.88000	0.44417	292.46	292.46	0.00	24-HR	ALL	1ST	11121824
366595.69000	3792464.50000	0.46056	292.84	292.84	0.00	24-HR	ALL	1ST	11121824
366689.52000	3792488.12000	0.44303	294.00	294.00	0.00	24-HR	ALL	1ST	11121824
366317.23000	3792471.96000	0.37495	292.06	292.06	0.00	24-HR	ALL	1ST	8121824
366184.43000	3792387.41000	0.41500	288.64	288.64	0.00	24-HR	ALL	1ST	8121824
366477.46000	3792537.85000	0.38142	293.81	293.81	0.00	24-HR	ALL	1ST	11121824
366571.28000	3792561.47000	0.44810	294.56	294.56	0.00	24-HR	ALL	1ST	11121824
366665.10000	3792585.09000	0.43965	295.10	295.10	0.00	24-HR	ALL	1ST	11121824
366862.54000	3792165.94000	0.97365	290.54	290.54	0.00	24-HR	ALL	1ST	12120124
366932.33000	3792085.91000	1.53985	289.69	289.69	0.00	24-HR	ALL	1ST	12120124
366907.59000	3792251.47000	0.77470	291.95	291.95	0.00	24-HR	ALL	1ST	12111224
366979.16000	3792319.67000	0.67166	293.23	293.23	0.00	24-HR	ALL	1ST	12111224
366836.11000	3792387.67000	0.61115	293.24	293.24	0.00	24-HR	ALL	1ST	12111224
367048.17000	3792257.38000	0.89283	292.16	292.16	0.00	24-HR	ALL	1ST	12111224
367052.26000	3792386.88000	0.57896	293.96	293.96	0.00	24-HR	ALL	1ST	12111224
366943.10000	3792458.17000	0.57997	294.72	294.72	0.00	24-HR	ALL	1ST	12111224
366819.84000	3792484.41000	0.54752	294.97	294.97	0.00	24-HR	ALL	1ST	12111224
367123.54000	3792323.10000	0.68127	293.34	293.34	0.00	24-HR	ALL	1ST	12122324
367126.11000	3792453.60000	0.50857	295.46	295.46	0.00	24-HR	ALL	1ST	10101924
367050.31000	3792503.10000	0.52792	295.29	295.29	0.00	24-HR	ALL	1ST	12111224
366974.51000	3792552.61000	0.51864	295.74	295.74	0.00	24-HR	ALL	1ST	12111224
366846.10000	3792579.94000	0.49098	296.03	296.03	0.00	24-HR	ALL	1ST	12111224
366755.60000	3792582.52000	0.43846	295.28	295.28	0.00	24-HR	ALL	1ST	12111224
367198.90000	3792388.83000	0.53186	295.01	295.01	0.00	24-HR	ALL	1ST	12122324
366792.31000	3792096.48000	1.68392	289.39	289.39	0.00	24-HR	ALL	1ST	12120124
367147.25000	3792560.30000	0.44598	297.18	297.18	0.00	24-HR	ALL	1ST	10101924
367112.95000	3792654.23000	0.43432	298.59	298.59	0.00	24-HR	ALL	1ST	12111224
366995.52000	3792648.16000	0.47251	297.56	297.56	0.00	24-HR	ALL	1ST	12111224
367243.10000	3792639.28000	0.37265	299.13	299.13	0.00	24-HR	ALL	1ST	10101924
367122.70000	3792750.44000	0.39999	299.87	299.87	0.00	24-HR	ALL	1ST	12111224
366975.90000	3792742.85000	0.43335	298.80	298.80	0.00	24-HR	ALL	1ST	12111224
366843.93000	3792694.67000	0.42792	297.78	297.78	0.00	24-HR	ALL	1ST	12111224
367267.52000	3792736.25000	0.34562	300.74	300.74	0.00	24-HR	ALL	1ST	10101924
367236.79000	3792266.23000	0.59129	294.06	294.06	0.00	24-HR	ALL	1ST	11111224
367334.23000	3792243.75000	0.52972	293.92	293.92	0.00	24-HR	ALL	1ST	10120724
367431.67000	3792221.28000	0.52623	294.25	294.25	0.00	24-HR	ALL	1ST	10120724
367413.49000	3792333.23000	0.47690	295.73	295.73	0.00	24-HR	ALL	1ST	11111224
367370.92000	3792430.27000	0.45300	296.36	296.36	0.00	24-HR	ALL	1ST	11111224
367279.58000	3792497.49000	0.42390	297.19	297.19	0.00	24-HR	ALL	1ST	10102124
367528.25000	3792204.13000	0.50787	294.45	294.45	0.00	24-HR	ALL	1ST	10120724
367507.47000	3792332.08000	0.43032	296.47	296.47	0.00	24-HR	ALL	1ST	8110124
367451.89000	3792485.63000	0.41128	298.37	298.37	0.00	24-HR	ALL	1ST	11111224
367347.50000	3792562.45000	0.37633	297.91	297.91	0.00	24-HR	ALL	1ST	10102124
367625.88000	3792180.47000	0.49263	294.82	294.82	0.00	24-HR	ALL	1ST	10120724
367605.68000	3792304.86000	0.41864	296.32	296.32	0.00	24-HR	ALL	1ST	10120724
367585.48000	3792429.25000	0.38991	298.50	298.50	0.00	24-HR	ALL	1ST	11111224
367538.18000	3792537.07000	0.37643	299.28	299.28	0.00	24-HR	ALL	1ST	11111224
367436.69000	3792611.76000	0.33319	299.49	299.49	0.00	24-HR	ALL	1ST	10102124

367138.03000	3792115.65000	1.01807	291.05	291.05	0.00	24-HR	ALL	1ST	10120724
367218.18000	3792165.58000	0.75389	292.32	292.32	0.00	24-HR	ALL	1ST	10120724
367115.23000	3792018.29000	1.11638	288.99	288.99	0.00	24-HR	ALL	1ST	10120724
367216.12000	3792034.94000	0.87769	290.24	290.24	0.00	24-HR	ALL	1ST	10120724
367285.91000	3792101.50000	0.72790	291.82	291.82	0.00	24-HR	ALL	1ST	10120724
367092.44000	3791920.92000	1.24891	287.65	287.65	0.00	24-HR	ALL	1ST	10120724
367193.33000	3791937.57000	0.99898	289.12	289.12	0.00	24-HR	ALL	1ST	10120724
367309.07000	3791975.02000	0.80452	289.55	289.55	0.00	24-HR	ALL	1ST	10120724
367368.50000	3792058.23000	0.68562	291.07	291.07	0.00	24-HR	ALL	1ST	10120724
367069.65000	3791823.55000	1.54905	286.26	286.26	0.00	24-HR	ALL	1ST	10120724
367170.53000	3791840.20000	1.15419	287.12	287.12	0.00	24-HR	ALL	1ST	10120724
367271.42000	3791856.85000	0.94146	288.26	288.26	0.00	24-HR	ALL	1ST	10120724
367361.94000	3791890.14000	0.79748	288.79	288.79	0.00	24-HR	ALL	1ST	10120724
367421.37000	3791973.35000	0.69410	290.55	290.55	0.00	24-HR	ALL	1ST	10120724
367480.79000	3792056.55000	0.60422	292.22	292.22	0.00	24-HR	ALL	1ST	10120724
367046.85000	3791726.18000	1.95057	284.81	284.81	0.00	24-HR	ALL	1ST	10120724
367147.74000	3791742.83000	1.33308	285.49	285.49	0.00	24-HR	ALL	1ST	10120724
367248.62000	3791759.48000	1.04616	286.37	286.37	0.00	24-HR	ALL	1ST	10120724
367349.51000	3791776.13000	0.85582	286.86	286.86	0.00	24-HR	ALL	1ST	10120724
367429.67000	3791826.06000	0.73811	288.09	288.09	0.00	24-HR	ALL	1ST	10120724
367489.09000	3791909.27000	0.65893	289.85	289.85	0.00	24-HR	ALL	1ST	10120724
367548.52000	3791992.47000	0.58684	291.69	291.69	0.00	24-HR	ALL	1ST	10120724
367607.95000	3792075.68000	0.52140	293.36	293.36	0.00	24-HR	ALL	1ST	10120724
367224.16000	3791655.67000	1.15336	285.08	285.08	0.00	24-HR	ALL	1ST	10120724
367382.18000	3791675.47000	0.79424	285.86	285.86	0.00	24-HR	ALL	1ST	10120724
367296.14000	3791586.25000	0.91826	284.34	284.34	0.00	24-HR	ALL	1ST	10120724
367014.86000	3791995.11000	1.67371	288.44	288.44	0.00	24-HR	ALL	1ST	10120724
367518.41000	3791796.26000	0.63980	288.84	288.84	0.00	24-HR	ALL	1ST	10120724
367529.79000	3791699.50000	0.60208	287.39	287.39	0.00	24-HR	ALL	1ST	10120724
367201.26000	3791534.06000	1.18016	283.76	283.76	0.00	24-HR	ALL	1ST	10120724
367175.42000	3791412.71000	0.93475	282.44	282.44	0.00	24-HR	ALL	1ST	8010224
367100.98000	3791351.05000	0.99010	281.76	281.76	0.00	24-HR	ALL	1ST	10010924
367026.54000	3791289.40000	1.00124	281.08	281.08	0.00	24-HR	ALL	1ST	10010924
366952.10000	3791227.75000	0.97423	280.41	280.41	0.00	24-HR	ALL	1ST	10010924
366877.67000	3791166.10000	0.93055	279.73	279.73	0.00	24-HR	ALL	1ST	10010924
366803.23000	3791104.44000	0.86727	278.16	278.16	0.00	24-HR	ALL	1ST	10010924
366728.79000	3791042.79000	0.79002	277.37	277.37	0.00	24-HR	ALL	1ST	10011524
366654.35000	3790981.14000	0.71642	275.89	275.89	0.00	24-HR	ALL	1ST	10011524
366579.91000	3790919.49000	0.59357	274.25	274.25	0.00	24-HR	ALL	1ST	10011524
366505.48000	3790857.84000	0.46933	273.34	273.34	0.00	24-HR	ALL	1ST	8112024
367273.22000	3791391.88000	0.68237	282.23	282.23	0.00	24-HR	ALL	1ST	9112624
367164.77000	3791274.04000	0.74337	280.94	280.94	0.00	24-HR	ALL	1ST	10010924
367090.33000	3791212.39000	0.75903	280.26	280.26	0.00	24-HR	ALL	1ST	10010924
367015.89000	3791150.73000	0.73802	279.58	279.58	0.00	24-HR	ALL	1ST	10010924
366941.45000	3791089.08000	0.69854	278.91	278.91	0.00	24-HR	ALL	1ST	10010924
366867.01000	3791027.43000	0.64444	278.18	278.18	0.00	24-HR	ALL	1ST	10010924
366792.58000	3790965.78000	0.57156	276.55	276.55	0.00	24-HR	ALL	1ST	10010924
366718.14000	3790904.12000	0.50538	275.87	275.87	0.00	24-HR	ALL	1ST	10011524
366643.70000	3790842.47000	0.43014	274.27	274.27	0.00	24-HR	ALL	1ST	10011524
366569.26000	3790780.82000	0.35649	272.63	272.63	0.00	24-HR	ALL	1ST	10011524
367337.01000	3791314.86000	0.51596	281.41	281.41	0.00	24-HR	ALL	1ST	9112624
367396.87000	3791492.41000	0.62698	283.34	283.34	0.00	24-HR	ALL	1ST	9112624
367228.55000	3791197.02000	0.59736	280.12	280.12	0.00	24-HR	ALL	1ST	10010924
367154.11000	3791135.37000	0.61138	279.44	279.44	0.00	24-HR	ALL	1ST	10010924
367079.68000	3791073.72000	0.59525	278.76	278.76	0.00	24-HR	ALL	1ST	10010924
367005.24000	3791012.07000	0.56055	278.08	278.08	0.00	24-HR	ALL	1ST	10010924
366930.80000	3790950.41000	0.51262	277.40	277.40	0.00	24-HR	ALL	1ST	10010924
366856.36000	3790888.76000	0.45126	276.57	276.57	0.00	24-HR	ALL	1ST	10010924
366781.93000	3790827.11000	0.37916	275.05	275.05	0.00	24-HR	ALL	1ST	10011524
366707.49000	3790765.46000	0.33634	274.29	274.29	0.00	24-HR	ALL	1ST	10011524
366633.05000	3790703.81000	0.30073	272.36	272.36	0.00	24-HR	ALL	1ST	10011724
367412.14000	3791256.58000	0.43010	280.79	280.79	0.00	24-HR	ALL	1ST	10010924
367491.96000	3791493.30000	0.53344	283.73	283.73	0.00	24-HR	ALL	1ST	9112624
367292.34000	3791120.01000	0.49709	279.29	279.29	0.00	24-HR	ALL	1ST	10010924
367217.90000	3791058.36000	0.50848	278.62	278.62	0.00	24-HR	ALL	1ST	10010924
367143.46000	3790996.70000	0.49604	277.94	277.94	0.00	24-HR	ALL	1ST	10010924
367069.03000	3790935.05000	0.46658	277.26	277.26	0.00	24-HR	ALL	1ST	10010924
366994.59000	3790873.40000	0.42532	276.85	276.85	0.00	24-HR	ALL	1ST	10010924
366920.15000	3790811.75000	0.37297	275.90	275.90	0.00	24-HR	ALL	1ST	10010924
366845.71000	3790750.10000	0.30928	274.95	274.95	0.00	24-HR	ALL	1ST	10010924
366771.27000	3790688.44000	0.27627	273.55	273.55	0.00	24-HR	ALL	1ST	11011624

366696.84000	3790626.79000	0.26503	272.38	272.38	0.00	24-HR	ALL	1ST	10011724
367473.09000	3791174.88000	0.37620	280.74	280.74	0.00	24-HR	ALL	1ST	10010924
367558.14000	3791315.34000	0.39555	282.35	282.35	0.00	24-HR	ALL	1ST	9112624
367590.44000	3791467.04000	0.45290	284.09	284.09	0.00	24-HR	ALL	1ST	9112624
367356.13000	3791042.99000	0.42294	278.47	278.47	0.00	24-HR	ALL	1ST	10010924
367281.69000	3790981.34000	0.43211	277.79	277.79	0.00	24-HR	ALL	1ST	10010924
367207.25000	3790919.69000	0.42253	277.11	277.11	0.00	24-HR	ALL	1ST	10010924
367132.81000	3790858.04000	0.39848	277.00	277.00	0.00	24-HR	ALL	1ST	10010924
367058.37000	3790796.39000	0.36340	276.76	276.76	0.00	24-HR	ALL	1ST	10010924
366983.94000	3790734.73000	0.31876	275.61	275.61	0.00	24-HR	ALL	1ST	10010924
366909.50000	3790673.08000	0.26593	274.40	274.40	0.00	24-HR	ALL	1ST	11122524
366835.06000	3790611.43000	0.23876	273.17	273.17	0.00	24-HR	ALL	1ST	12020424
366760.62000	3790549.78000	0.23394	271.71	271.71	0.00	24-HR	ALL	1ST	10011724
366366.76000	3790868.62000	0.50737	272.86	272.86	0.00	24-HR	ALL	1ST	8112024
366301.28000	3790942.71000	0.55329	273.82	273.82	0.00	24-HR	ALL	1ST	9112924
366235.80000	3791016.79000	0.56873	274.01	274.01	0.00	24-HR	ALL	1ST	9112924
366359.01000	3790768.93000	0.41399	271.35	271.35	0.00	24-HR	ALL	1ST	8112024
366226.35000	3790876.48000	0.43874	272.50	272.50	0.00	24-HR	ALL	1ST	9112924
366160.87000	3790950.57000	0.43556	273.12	273.12	0.00	24-HR	ALL	1ST	9112924
366284.08000	3790702.70000	0.34632	270.62	270.62	0.00	24-HR	ALL	1ST	8112024
366489.97000	3790658.44000	0.31554	270.29	270.29	0.00	24-HR	ALL	1ST	8112024
366151.43000	3790810.26000	0.36572	271.44	271.44	0.00	24-HR	ALL	1ST	9112924
366085.95000	3790884.34000	0.35265	271.56	271.56	0.00	24-HR	ALL	1ST	9112924
366209.15000	3790636.48000	0.28635	269.90	269.90	0.00	24-HR	ALL	1ST	8112024
366343.50000	3790569.53000	0.30286	269.19	269.19	0.00	24-HR	ALL	1ST	8112024
366482.21000	3790558.74000	0.27169	269.10	269.10	0.00	24-HR	ALL	1ST	8112024
366076.50000	3790744.03000	0.31119	270.04	270.04	0.00	24-HR	ALL	1ST	9112924
366011.02000	3790818.12000	0.29380	270.83	270.83	0.00	24-HR	ALL	1ST	9112924
366151.02000	3790561.88000	0.25179	269.08	269.08	0.00	24-HR	ALL	1ST	9112924
366234.98000	3790520.04000	0.26710	268.64	268.64	0.00	24-HR	ALL	1ST	8112024
366318.95000	3790478.20000	0.26845	268.20	268.20	0.00	24-HR	ALL	1ST	8112024
366492.34000	3790464.71000	0.23346	268.08	268.08	0.00	24-HR	ALL	1ST	8112024
366581.77000	3790493.07000	0.21898	268.74	268.74	0.00	24-HR	ALL	1ST	10011724
366671.20000	3790521.42000	0.23414	270.22	270.22	0.00	24-HR	ALL	1ST	10011724
366067.05000	3790603.72000	0.26601	269.13	269.13	0.00	24-HR	ALL	1ST	9112924
366001.57000	3790677.81000	0.26875	269.31	269.31	0.00	24-HR	ALL	1ST	9112924
365936.09000	3790751.89000	0.24879	270.10	270.10	0.00	24-HR	ALL	1ST	9112924
366441.69000	3790934.85000	0.70559	274.16	274.16	0.00	24-HR	ALL	1ST	8112024
367111.63000	3791489.72000	1.83276	283.27	283.27	0.00	24-HR	ALL	1ST	10120724
367032.23000	3791650.21000	2.41389	284.00	284.00	0.00	24-HR	ALL	1ST	10120724
367026.80000	3791705.02000	2.28092	284.58	284.58	0.00	24-HR	ALL	1ST	10120724
367004.60000	3791824.64000	2.18017	285.87	285.87	0.00	24-HR	ALL	1ST	10120724
366979.97000	3791877.66000	2.08919	286.44	286.44	0.00	24-HR	ALL	1ST	10120724
366936.23000	3791933.33000	2.27448	287.08	287.08	0.00	24-HR	ALL	1ST	10120724
367022.27000	3792022.55000	1.87108	289.02	289.02	0.00	24-HR	ALL	1ST	10120724
367109.97000	3792214.86000	1.30340	292.02	292.02	0.00	24-HR	ALL	1ST	10120724
367135.60000	3792208.86000	0.98791	292.29	292.29	0.00	24-HR	ALL	1ST	10120724
367145.41000	3792251.39000	0.81663	292.87	292.87	0.00	24-HR	ALL	1ST	11111224
367073.98000	3792269.38000	0.99082	292.52	292.52	0.00	24-HR	ALL	1ST	12122324
366953.47000	3792101.98000	1.48597	289.87	289.87	0.00	24-HR	ALL	1ST	12120124
366856.96000	3792020.19000	2.10409	288.58	288.58	0.00	24-HR	ALL	1ST	12120124
366787.17000	3792100.22000	1.62617	289.41	289.41	0.00	24-HR	ALL	1ST	12120124
366505.70000	3792029.36000	1.40626	287.01	287.01	0.00	24-HR	ALL	1ST	12112924
366497.06000	3791828.21000	1.58074	283.83	283.83	0.00	24-HR	ALL	1ST	12120224
366374.82000	3791826.25000	1.45470	283.67	283.67	0.00	24-HR	ALL	1ST	12112924
366257.42000	3791647.90000	1.50985	279.85	279.85	0.00	24-HR	ALL	1ST	12120224
366223.02000	3791586.94000	1.47160	279.18	279.18	0.00	24-HR	ALL	1ST	12120224
366218.11000	3791478.88000	1.41897	278.01	278.01	0.00	24-HR	ALL	1ST	12120224
366207.45000	3791452.00000	1.40250	277.72	277.72	0.00	24-HR	ALL	1ST	12120224
366173.15000	3791439.02000	1.23928	277.57	277.57	0.00	24-HR	ALL	1ST	12120224
366159.24000	3791421.87000	1.20472	277.39	277.39	0.00	24-HR	ALL	1ST	12120224
366183.95000	3791300.40000	0.96425	277.00	277.00	0.00	24-HR	ALL	1ST	12120224
366274.16000	3791157.44000	1.03158	275.64	275.64	0.00	24-HR	ALL	1ST	9112924
366310.73000	3791083.02000	0.92589	275.44	275.44	0.00	24-HR	ALL	1ST	9112924

** CONCUNIT ug/m^3
** DEPUNIT g/m^2

APPENDIX F

AERMOD Model Diesel PM10 Printouts for Spreading Grounds Area

```
**
****************************************
**
** AERMOD Input Produced by:
** AERMOD View Ver. 8.9.0
** Lakes Environmental Software Inc.
** Date: 6/3/2015
** File: C:\Vista Env\2013\13001 Pacoima\AERMOD\Pacoima PM10\Pacoima PM10.ADI
**
****************************************
**
**
****************************************
** AERMOD Control Pathway
****************************************
**
**
CO STARTING
   TITLEONE Pacoima Spreading Grounds Improvement Project Diesel PM10
   TITLETWO Spreading Basin Area - Diesel PM10 Emissions
   MODELOPT DFAULT CONC
   AVERTIME 1 ANNUAL
   URBANOPT 9862049 Los_Angeles_County
   POLLUTID PM_10
   RUNORNOT RUN
   ERRORFIL "Pacoima PM10.err"
CO FINISHED
**
****************************************
** AERMOD Source Pathway
****************************************
**
**
SO STARTING
** Source Location **
** Source ID - Type - X Coord. - Y Coord. **
   LOCATION EQUIP1       POINT      367047.698  3792163.914      290.650
** DESCRSRC Onsite diesel equipment 1
   LOCATION EQUIP2       POINT      366751.908  3792053.951      288.400
** DESCRSRC Onsite diesel equipment 2
   LOCATION EQUIP3       POINT      367051.230  3791514.562      283.530
** DESCRSRC Onsite diesel equipment 3
   LOCATION EQUIP4       POINT      366395.022  3791778.217      283.040
** DESCRSRC Onsite diesel equipment 4
   LOCATION EQUIP5       POINT      366218.498  3791400.897      277.170
** DESCRSRC Onsite diesel equipment 5
   LOCATION EQUIP6       POINT      366439.153  3790995.821      274.820
** DESCRSRC Onsite diesel equipment 6
   LOCATION IDLEN        POINT      366694.580  3791808.490      284.500
** DESCRSRC Haul truck Idling north of Devondhire
   LOCATION IDLES        POINT      366558.350  3791378.467      278.980
** DESCRSRC Haul truck Idling south of Devondhire
** ----------------------------------------------------------------------
** Line Source Represented by Separated Volume Sources
** LINE VOLUME Source ID = RDONNDEV
** DESCRSRC Onsite Haul Trucks north of Devonshire
** PREFIX
** Length of Side = 3.66
** Configuration = Separated
** Emission Rate = 3.007E-06
** Vertical Dimension = 1.83
** SZINIT = 0.85
** Nodes = 7
** 366882.612, 3791676.095, 283.90, 1.83, 3.38
** 366874.937, 3791831.512, 285.99, 1.83, 3.38
** 366817.375, 3791937.043, 286.97, 1.83, 3.38
** 366702.251, 3791983.092, 287.18, 1.83, 3.38
** 366583.289, 3791952.393, 285.38, 1.83, 3.38
** 366558.346, 3791812.325, 283.99, 1.83, 3.38
** 366558.346, 3791660.745, 281.24, 1.83, 3.38
** ----------------------------------------------------------------------
   LOCATION L0000713     VOLUME   366882.522 3791677.921 284.27
   LOCATION L0000714     VOLUME   366882.164 3791685.170 284.35
   LOCATION L0000715     VOLUME   366881.806 3791692.419 284.42
   LOCATION L0000716     VOLUME   366881.448 3791699.668 284.50
   LOCATION L0000717     VOLUME   366881.090 3791706.917 284.58
```

LOCATION	L0000718	VOLUME	366880.732	3791714.165	284.66
LOCATION	L0000719	VOLUME	366880.374	3791721.414	284.74
LOCATION	L0000720	VOLUME	366880.016	3791728.663	284.81
LOCATION	L0000721	VOLUME	366879.658	3791735.912	284.88
LOCATION	L0000722	VOLUME	366879.300	3791743.161	284.95
LOCATION	L0000723	VOLUME	366878.942	3791750.410	285.03
LOCATION	L0000724	VOLUME	366878.585	3791757.659	285.10
LOCATION	L0000725	VOLUME	366878.227	3791764.907	285.18
LOCATION	L0000726	VOLUME	366877.869	3791772.156	285.26
LOCATION	L0000727	VOLUME	366877.511	3791779.405	285.33
LOCATION	L0000728	VOLUME	366877.153	3791786.654	285.41
LOCATION	L0000729	VOLUME	366876.795	3791793.903	285.49
LOCATION	L0000730	VOLUME	366876.437	3791801.152	285.57
LOCATION	L0000731	VOLUME	366876.079	3791808.401	285.65
LOCATION	L0000732	VOLUME	366875.721	3791815.649	285.74
LOCATION	L0000733	VOLUME	366875.363	3791822.898	285.82
LOCATION	L0000734	VOLUME	366875.005	3791830.147	285.91
LOCATION	L0000735	VOLUME	366872.117	3791836.684	285.98
LOCATION	L0000736	VOLUME	366868.641	3791843.055	286.05
LOCATION	L0000737	VOLUME	366865.166	3791849.427	286.12
LOCATION	L0000738	VOLUME	366861.690	3791855.798	286.19
LOCATION	L0000739	VOLUME	366858.215	3791862.170	286.26
LOCATION	L0000740	VOLUME	366854.740	3791868.541	286.33
LOCATION	L0000741	VOLUME	366851.264	3791874.913	286.39
LOCATION	L0000742	VOLUME	366847.789	3791881.284	286.46
LOCATION	L0000743	VOLUME	366844.314	3791887.656	286.53
LOCATION	L0000744	VOLUME	366840.838	3791894.027	286.60
LOCATION	L0000745	VOLUME	366837.363	3791900.399	286.67
LOCATION	L0000746	VOLUME	366833.888	3791906.770	286.74
LOCATION	L0000747	VOLUME	366830.412	3791913.142	286.80
LOCATION	L0000748	VOLUME	366826.937	3791919.513	286.87
LOCATION	L0000749	VOLUME	366823.461	3791925.885	286.94
LOCATION	L0000750	VOLUME	366819.986	3791932.256	287.01
LOCATION	L0000751	VOLUME	366815.699	3791937.713	287.08
LOCATION	L0000752	VOLUME	366808.960	3791940.409	287.10
LOCATION	L0000753	VOLUME	366802.222	3791943.104	287.07
LOCATION	L0000754	VOLUME	366795.483	3791945.800	287.03
LOCATION	L0000755	VOLUME	366788.745	3791948.495	286.99
LOCATION	L0000756	VOLUME	366782.006	3791951.190	286.95
LOCATION	L0000757	VOLUME	366775.267	3791953.886	286.92
LOCATION	L0000758	VOLUME	366768.529	3791956.581	286.90
LOCATION	L0000759	VOLUME	366761.790	3791959.277	286.88
LOCATION	L0000760	VOLUME	366755.052	3791961.972	286.86
LOCATION	L0000761	VOLUME	366748.313	3791964.668	286.85
LOCATION	L0000762	VOLUME	366741.574	3791967.363	286.84
LOCATION	L0000763	VOLUME	366734.836	3791970.059	286.84
LOCATION	L0000764	VOLUME	366728.097	3791972.754	286.85
LOCATION	L0000765	VOLUME	366721.359	3791975.449	286.87
LOCATION	L0000766	VOLUME	366714.620	3791978.145	286.88
LOCATION	L0000767	VOLUME	366707.881	3791980.840	286.88
LOCATION	L0000768	VOLUME	366701.095	3791982.794	286.87
LOCATION	L0000769	VOLUME	366694.068	3791980.981	286.79
LOCATION	L0000770	VOLUME	366687.040	3791979.167	286.71
LOCATION	L0000771	VOLUME	366680.013	3791977.354	286.64
LOCATION	L0000772	VOLUME	366672.986	3791975.540	286.57
LOCATION	L0000773	VOLUME	366665.958	3791973.726	286.50
LOCATION	L0000774	VOLUME	366658.931	3791971.913	286.44
LOCATION	L0000775	VOLUME	366651.903	3791970.099	286.38
LOCATION	L0000776	VOLUME	366644.876	3791968.286	286.30
LOCATION	L0000777	VOLUME	366637.848	3791966.472	286.22
LOCATION	L0000778	VOLUME	366630.821	3791964.659	286.13
LOCATION	L0000779	VOLUME	366623.793	3791962.845	286.04
LOCATION	L0000780	VOLUME	366616.766	3791961.032	285.95
LOCATION	L0000781	VOLUME	366609.738	3791959.218	285.85
LOCATION	L0000782	VOLUME	366602.711	3791957.405	285.75
LOCATION	L0000783	VOLUME	366595.683	3791955.591	285.64
LOCATION	L0000784	VOLUME	366588.656	3791953.778	285.54
LOCATION	L0000785	VOLUME	366582.989	3791950.704	285.41
LOCATION	L0000786	VOLUME	366581.716	3791943.559	285.25
LOCATION	L0000787	VOLUME	366580.444	3791936.413	285.09
LOCATION	L0000788	VOLUME	366579.171	3791929.268	284.98
LOCATION	L0000789	VOLUME	366577.899	3791922.123	284.88
LOCATION	L0000790	VOLUME	366576.626	3791914.978	284.79
LOCATION	L0000791	VOLUME	366575.354	3791907.832	284.71
LOCATION	L0000792	VOLUME	366574.082	3791900.687	284.63
LOCATION	L0000793	VOLUME	366572.809	3791893.542	284.55

```
   LOCATION L0000794     VOLUME   366571.537 3791886.397 284.47
   LOCATION L0000795     VOLUME   366570.264 3791879.251 284.40
   LOCATION L0000796     VOLUME   366568.992 3791872.106 284.32
   LOCATION L0000797     VOLUME   366567.719 3791864.961 284.24
   LOCATION L0000798     VOLUME   366566.447 3791857.815 284.16
   LOCATION L0000799     VOLUME   366565.174 3791850.670 284.09
   LOCATION L0000800     VOLUME   366563.902 3791843.525 284.01
   LOCATION L0000801     VOLUME   366562.630 3791836.380 283.93
   LOCATION L0000802     VOLUME   366561.357 3791829.234 283.85
   LOCATION L0000803     VOLUME   366560.085 3791822.089 283.78
   LOCATION L0000804     VOLUME   366558.812 3791814.944 283.70
   LOCATION L0000805     VOLUME   366558.346 3791807.727 283.62
   LOCATION L0000806     VOLUME   366558.346 3791800.470 283.54
   LOCATION L0000807     VOLUME   366558.346 3791793.212 283.46
   LOCATION L0000808     VOLUME   366558.346 3791785.954 283.39
   LOCATION L0000809     VOLUME   366558.346 3791778.697 283.31
   LOCATION L0000810     VOLUME   366558.346 3791771.439 283.23
   LOCATION L0000811     VOLUME   366558.346 3791764.181 283.15
   LOCATION L0000812     VOLUME   366558.346 3791756.923 283.07
   LOCATION L0000813     VOLUME   366558.346 3791749.666 282.99
   LOCATION L0000814     VOLUME   366558.346 3791742.408 282.83
   LOCATION L0000815     VOLUME   366558.346 3791735.150 282.67
   LOCATION L0000816     VOLUME   366558.346 3791727.893 282.52
   LOCATION L0000817     VOLUME   366558.346 3791720.635 282.36
   LOCATION L0000818     VOLUME   366558.346 3791713.377 282.20
   LOCATION L0000819     VOLUME   366558.346 3791706.120 282.04
   LOCATION L0000820     VOLUME   366558.346 3791698.862 281.89
   LOCATION L0000821     VOLUME   366558.346 3791691.604 281.73
   LOCATION L0000822     VOLUME   366558.346 3791684.347 281.57
   LOCATION L0000823     VOLUME   366558.346 3791677.089 281.42
   LOCATION L0000824     VOLUME   366558.346 3791669.831 281.26
   LOCATION L0000825     VOLUME   366558.346 3791662.573 281.10
** End of LINE VOLUME Source ID = RDONNDEV
** ----------------------------------------------------------------------
** Line Source Represented by Separated Volume Sources
** LINE VOLUME Source ID = RDONSDEV
** DESCRSRC Onsite Haul Trucks south of Devonshire
** PREFIX
** Length of Side = 3.66
** Configuration = Separated
** Emission Rate = 3.007E-06
** Vertical Dimension = 1.83
** SZINIT = 0.85
** Nodes = 7
** 366391.416, 3791622.370, 280.75, 1.83, 3.38
** 366299.316, 3791386.365, 277.43, 1.83, 3.38
** 366347.285, 3791261.647, 276.84, 1.83, 3.38
** 366472.003, 3791123.498, 275.91, 1.83, 3.38
** 366757.894, 3791330.722, 280.02, 1.83, 3.38
** 366851.913, 3791509.164, 281.65, 1.83, 3.38
** 366853.831, 3791643.476, 283.74, 1.83, 3.38
** ----------------------------------------------------------------------
   LOCATION L0000826     VOLUME   366390.751 3791620.666 280.57
   LOCATION L0000827     VOLUME   366388.106 3791613.889 280.50
   LOCATION L0000828     VOLUME   366385.462 3791607.112 280.42
   LOCATION L0000829     VOLUME   366382.817 3791600.335 280.35
   LOCATION L0000830     VOLUME   366380.172 3791593.558 280.28
   LOCATION L0000831     VOLUME   366377.527 3791586.781 280.20
   LOCATION L0000832     VOLUME   366374.883 3791580.004 280.13
   LOCATION L0000833     VOLUME   366372.238 3791573.227 280.06
   LOCATION L0000834     VOLUME   366369.593 3791566.450 279.98
   LOCATION L0000835     VOLUME   366366.949 3791559.673 279.91
   LOCATION L0000836     VOLUME   366364.304 3791552.896 279.83
   LOCATION L0000837     VOLUME   366361.659 3791546.119 279.76
   LOCATION L0000838     VOLUME   366359.015 3791539.342 279.69
   LOCATION L0000839     VOLUME   366356.370 3791532.565 279.61
   LOCATION L0000840     VOLUME   366353.725 3791525.788 279.54
   LOCATION L0000841     VOLUME   366351.080 3791519.011 279.47
   LOCATION L0000842     VOLUME   366348.436 3791512.234 279.39
   LOCATION L0000843     VOLUME   366345.791 3791505.457 279.32
   LOCATION L0000844     VOLUME   366343.146 3791498.680 279.24
   LOCATION L0000845     VOLUME   366340.502 3791491.903 279.17
   LOCATION L0000846     VOLUME   366337.857 3791485.126 279.07
   LOCATION L0000847     VOLUME   366335.212 3791478.349 278.97
   LOCATION L0000848     VOLUME   366332.568 3791471.572 278.86
   LOCATION L0000849     VOLUME   366329.923 3791464.795 278.75
```

LOCATION	L0000850	VOLUME	366327.278	3791458.018	278.64
LOCATION	L0000851	VOLUME	366324.634	3791451.241	278.54
LOCATION	L0000852	VOLUME	366321.989	3791444.463	278.43
LOCATION	L0000853	VOLUME	366319.344	3791437.686	278.32
LOCATION	L0000854	VOLUME	366316.699	3791430.909	278.22
LOCATION	L0000855	VOLUME	366314.055	3791424.132	278.11
LOCATION	L0000856	VOLUME	366311.410	3791417.355	278.00
LOCATION	L0000857	VOLUME	366308.765	3791410.578	277.90
LOCATION	L0000858	VOLUME	366306.121	3791403.801	277.79
LOCATION	L0000859	VOLUME	366303.476	3791397.024	277.68
LOCATION	L0000860	VOLUME	366300.831	3791390.247	277.58
LOCATION	L0000861	VOLUME	366300.432	3791383.465	277.50
LOCATION	L0000862	VOLUME	366303.044	3791376.675	277.50
LOCATION	L0000863	VOLUME	366305.655	3791369.885	277.49
LOCATION	L0000864	VOLUME	366308.266	3791363.095	277.47
LOCATION	L0000865	VOLUME	366310.878	3791356.305	277.45
LOCATION	L0000866	VOLUME	366313.489	3791349.515	277.43
LOCATION	L0000867	VOLUME	366316.101	3791342.725	277.40
LOCATION	L0000868	VOLUME	366318.712	3791335.935	277.36
LOCATION	L0000869	VOLUME	366321.324	3791329.146	277.32
LOCATION	L0000870	VOLUME	366323.935	3791322.356	277.28
LOCATION	L0000871	VOLUME	366326.547	3791315.566	277.22
LOCATION	L0000872	VOLUME	366329.158	3791308.776	277.17
LOCATION	L0000873	VOLUME	366331.770	3791301.986	277.11
LOCATION	L0000874	VOLUME	366334.381	3791295.196	277.04
LOCATION	L0000875	VOLUME	366336.993	3791288.406	276.97
LOCATION	L0000876	VOLUME	366339.604	3791281.616	276.90
LOCATION	L0000877	VOLUME	366342.216	3791274.826	276.82
LOCATION	L0000878	VOLUME	366344.827	3791268.037	276.75
LOCATION	L0000879	VOLUME	366347.573	3791261.329	276.68
LOCATION	L0000880	VOLUME	366352.447	3791255.929	276.62
LOCATION	L0000881	VOLUME	366357.322	3791250.529	276.56
LOCATION	L0000882	VOLUME	366362.197	3791245.129	276.50
LOCATION	L0000883	VOLUME	366367.072	3791239.729	276.45
LOCATION	L0000884	VOLUME	366371.947	3791234.329	276.39
LOCATION	L0000885	VOLUME	366376.822	3791228.930	276.33
LOCATION	L0000886	VOLUME	366381.697	3791223.530	276.27
LOCATION	L0000887	VOLUME	366386.571	3791218.130	276.22
LOCATION	L0000888	VOLUME	366391.446	3791212.730	276.16
LOCATION	L0000889	VOLUME	366396.321	3791207.330	276.10
LOCATION	L0000890	VOLUME	366401.196	3791201.930	276.04
LOCATION	L0000891	VOLUME	366406.071	3791196.531	276.00
LOCATION	L0000892	VOLUME	366410.946	3791191.131	276.00
LOCATION	L0000893	VOLUME	366415.821	3791185.731	276.04
LOCATION	L0000894	VOLUME	366420.695	3791180.331	276.09
LOCATION	L0000895	VOLUME	366425.570	3791174.931	276.13
LOCATION	L0000896	VOLUME	366430.445	3791169.531	276.17
LOCATION	L0000897	VOLUME	366435.320	3791164.132	276.19
LOCATION	L0000898	VOLUME	366440.195	3791158.732	276.21
LOCATION	L0000899	VOLUME	366445.070	3791153.332	276.23
LOCATION	L0000900	VOLUME	366449.945	3791147.932	276.23
LOCATION	L0000901	VOLUME	366454.819	3791142.532	276.23
LOCATION	L0000902	VOLUME	366459.694	3791137.132	276.22
LOCATION	L0000903	VOLUME	366464.569	3791131.732	276.20
LOCATION	L0000904	VOLUME	366469.444	3791126.333	276.18
LOCATION	L0000905	VOLUME	366474.801	3791125.527	276.19
LOCATION	L0000906	VOLUME	366480.692	3791129.796	276.25
LOCATION	L0000907	VOLUME	366486.582	3791134.066	276.32
LOCATION	L0000908	VOLUME	366492.472	3791138.335	276.37
LOCATION	L0000909	VOLUME	366498.362	3791142.605	276.42
LOCATION	L0000910	VOLUME	366504.252	3791146.874	276.46
LOCATION	L0000911	VOLUME	366510.143	3791151.143	276.51
LOCATION	L0000912	VOLUME	366516.033	3791155.413	276.56
LOCATION	L0000913	VOLUME	366521.923	3791159.682	276.61
LOCATION	L0000914	VOLUME	366527.813	3791163.952	276.65
LOCATION	L0000915	VOLUME	366533.703	3791168.221	276.70
LOCATION	L0000916	VOLUME	366539.594	3791172.490	276.75
LOCATION	L0000917	VOLUME	366545.484	3791176.760	276.79
LOCATION	L0000918	VOLUME	366551.374	3791181.029	276.84
LOCATION	L0000919	VOLUME	366557.264	3791185.299	276.89
LOCATION	L0000920	VOLUME	366563.155	3791189.568	276.93
LOCATION	L0000921	VOLUME	366569.045	3791193.838	276.98
LOCATION	L0000922	VOLUME	366574.935	3791198.107	277.03
LOCATION	L0000923	VOLUME	366580.825	3791202.376	277.08
LOCATION	L0000924	VOLUME	366586.715	3791206.646	277.12
LOCATION	L0000925	VOLUME	366592.606	3791210.915	277.17

```
   LOCATION L0000926     VOLUME   366598.496 3791215.185 277.22
   LOCATION L0000927     VOLUME   366604.386 3791219.454 277.26
   LOCATION L0000928     VOLUME   366610.276 3791223.723 277.31
   LOCATION L0000929     VOLUME   366616.166 3791227.993 277.36
   LOCATION L0000930     VOLUME   366622.057 3791232.262 277.41
   LOCATION L0000931     VOLUME   366627.947 3791236.532 277.45
   LOCATION L0000932     VOLUME   366633.837 3791240.801 277.50
   LOCATION L0000933     VOLUME   366639.727 3791245.071 277.55
   LOCATION L0000934     VOLUME   366645.618 3791249.340 277.65
   LOCATION L0000935     VOLUME   366651.508 3791253.609 277.85
   LOCATION L0000936     VOLUME   366657.398 3791257.879 278.05
   LOCATION L0000937     VOLUME   366663.288 3791262.148 278.25
   LOCATION L0000938     VOLUME   366669.178 3791266.418 278.45
   LOCATION L0000939     VOLUME   366675.069 3791270.687 278.65
   LOCATION L0000940     VOLUME   366680.959 3791274.957 278.84
   LOCATION L0000941     VOLUME   366686.849 3791279.226 279.04
   LOCATION L0000942     VOLUME   366692.739 3791283.495 279.24
   LOCATION L0000943     VOLUME   366698.629 3791287.765 279.43
   LOCATION L0000944     VOLUME   366704.520 3791292.034 279.59
   LOCATION L0000945     VOLUME   366710.410 3791296.304 279.74
   LOCATION L0000946     VOLUME   366716.300 3791300.573 279.89
   LOCATION L0000947     VOLUME   366722.190 3791304.842 280.00
   LOCATION L0000948     VOLUME   366728.081 3791309.112 280.02
   LOCATION L0000949     VOLUME   366733.971 3791313.381 280.05
   LOCATION L0000950     VOLUME   366739.861 3791317.651 280.08
   LOCATION L0000951     VOLUME   366745.751 3791321.920 280.13
   LOCATION L0000952     VOLUME   366751.641 3791326.190 280.17
   LOCATION L0000953     VOLUME   366757.532 3791330.459 280.23
   LOCATION L0000954     VOLUME   366761.077 3791336.762 280.29
   LOCATION L0000955     VOLUME   366764.468 3791343.198 280.35
   LOCATION L0000956     VOLUME   366767.859 3791349.634 280.42
   LOCATION L0000957     VOLUME   366771.250 3791356.070 280.50
   LOCATION L0000958     VOLUME   366774.641 3791362.506 280.58
   LOCATION L0000959     VOLUME   366778.032 3791368.942 280.66
   LOCATION L0000960     VOLUME   366781.423 3791375.378 280.76
   LOCATION L0000961     VOLUME   366784.814 3791381.814 280.83
   LOCATION L0000962     VOLUME   366788.205 3791388.250 280.88
   LOCATION L0000963     VOLUME   366791.596 3791394.686 280.92
   LOCATION L0000964     VOLUME   366794.987 3791401.122 280.96
   LOCATION L0000965     VOLUME   366798.378 3791407.559 280.99
   LOCATION L0000966     VOLUME   366801.769 3791413.995 281.01
   LOCATION L0000967     VOLUME   366805.160 3791420.431 281.04
   LOCATION L0000968     VOLUME   366808.551 3791426.867 281.06
   LOCATION L0000969     VOLUME   366811.943 3791433.303 281.10
   LOCATION L0000970     VOLUME   366815.334 3791439.739 281.14
   LOCATION L0000971     VOLUME   366818.725 3791446.175 281.19
   LOCATION L0000972     VOLUME   366822.116 3791452.611 281.24
   LOCATION L0000973     VOLUME   366825.507 3791459.047 281.30
   LOCATION L0000974     VOLUME   366828.898 3791465.483 281.36
   LOCATION L0000975     VOLUME   366832.289 3791471.919 281.45
   LOCATION L0000976     VOLUME   366835.680 3791478.356 281.56
   LOCATION L0000977     VOLUME   366839.071 3791484.792 281.68
   LOCATION L0000978     VOLUME   366842.462 3791491.228 281.79
   LOCATION L0000979     VOLUME   366845.853 3791497.664 281.90
   LOCATION L0000980     VOLUME   366849.244 3791504.100 282.02
   LOCATION L0000981     VOLUME   366851.935 3791510.715 282.12
   LOCATION L0000982     VOLUME   366852.039 3791517.989 282.20
   LOCATION L0000983     VOLUME   366852.143 3791525.263 282.28
   LOCATION L0000984     VOLUME   366852.246 3791532.537 282.36
   LOCATION L0000985     VOLUME   366852.350 3791539.811 282.44
   LOCATION L0000986     VOLUME   366852.454 3791547.085 282.52
   LOCATION L0000987     VOLUME   366852.558 3791554.359 282.59
   LOCATION L0000988     VOLUME   366852.662 3791561.633 282.67
   LOCATION L0000989     VOLUME   366852.766 3791568.907 282.75
   LOCATION L0000990     VOLUME   366852.870 3791576.181 282.83
   LOCATION L0000991     VOLUME   366852.974 3791583.455 282.91
   LOCATION L0000992     VOLUME   366853.078 3791590.729 282.99
   LOCATION L0000993     VOLUME   366853.182 3791598.003 283.07
   LOCATION L0000994     VOLUME   366853.286 3791605.277 283.14
   LOCATION L0000995     VOLUME   366853.390 3791612.551 283.22
   LOCATION L0000996     VOLUME   366853.493 3791619.825 283.30
   LOCATION L0000997     VOLUME   366853.597 3791627.099 283.38
   LOCATION L0000998     VOLUME   366853.701 3791634.373 283.46
   LOCATION L0000999     VOLUME   366853.805 3791641.647 283.54
** End of LINE VOLUME Source ID = RDONSDEV
** ----------------------------------------------------------------------
```

```
** Line Source Represented by Separated Volume Sources
** LINE VOLUME Source ID = RDOFFSITE
** DESCRSRC Offsite Haul Trucks
** PREFIX
** Length of Side = 12.19
** Configuration = Separated
** Emission Rate = 8.625E-06
** Vertical Dimension = 1.83
** SZINIT = 0.85
** Nodes = 6
** 366650.445, 3791656.907, 281.71, 1.83, 11.22
** 367041.868, 3791670.338, 284.04, 1.83, 11.22
** 367032.274, 3791766.275, 284.99, 1.83, 11.22
** 367007.330, 3791843.025, 285.95, 1.83, 11.22
** 366963.199, 3791923.612, 286.99, 1.83, 11.22
** 367294.061, 3792209.300, 292.99, 1.83, 11.22
** ---------------------------------------------------------------------
   LOCATION L0001000     VOLUME   366656.538 3791657.116 282.10
   LOCATION L0001001     VOLUME   366680.648 3791657.944 282.43
   LOCATION L0001002     VOLUME   366704.758 3791658.771 282.76
   LOCATION L0001003     VOLUME   366728.868 3791659.598 283.05
   LOCATION L0001004     VOLUME   366752.978 3791660.425 283.06
   LOCATION L0001005     VOLUME   366777.088 3791661.253 283.07
   LOCATION L0001006     VOLUME   366801.198 3791662.080 283.08
   LOCATION L0001007     VOLUME   366825.308 3791662.907 283.39
   LOCATION L0001008     VOLUME   366849.418 3791663.735 283.72
   LOCATION L0001009     VOLUME   366873.528 3791664.562 284.04
   LOCATION L0001010     VOLUME   366897.638 3791665.389 284.13
   LOCATION L0001011     VOLUME   366921.748 3791666.217 284.15
   LOCATION L0001012     VOLUME   366945.858 3791667.044 284.16
   LOCATION L0001013     VOLUME   366969.968 3791667.871 284.17
   LOCATION L0001014     VOLUME   366994.078 3791668.699 284.18
   LOCATION L0001015     VOLUME   367018.189 3791669.526 284.20
   LOCATION L0001016     VOLUME   367041.825 3791670.768 284.21
   LOCATION L0001017     VOLUME   367039.424 3791694.772 284.47
   LOCATION L0001018     VOLUME   367037.024 3791718.777 284.73
   LOCATION L0001019     VOLUME   367034.623 3791742.781 284.99
   LOCATION L0001020     VOLUME   367032.115 3791766.763 285.25
   LOCATION L0001021     VOLUME   367024.659 3791789.706 285.50
   LOCATION L0001022     VOLUME   367017.202 3791812.649 285.75
   LOCATION L0001023     VOLUME   367009.746 3791835.592 285.99
   LOCATION L0001024     VOLUME   366999.497 3791857.329 286.23
   LOCATION L0001025     VOLUME   366987.910 3791878.488 286.45
   LOCATION L0001026     VOLUME   366976.322 3791899.648 286.68
   LOCATION L0001027     VOLUME   366964.735 3791920.807 286.91
   LOCATION L0001028     VOLUME   366979.038 3791937.288 287.18
   LOCATION L0001029     VOLUME   366997.298 3791953.055 287.52
   LOCATION L0001030     VOLUME   367015.557 3791968.821 287.87
   LOCATION L0001031     VOLUME   367033.816 3791984.587 288.22
   LOCATION L0001032     VOLUME   367052.076 3792000.354 288.60
   LOCATION L0001033     VOLUME   367070.335 3792016.120 288.93
   LOCATION L0001034     VOLUME   367088.594 3792031.886 289.21
   LOCATION L0001035     VOLUME   367106.854 3792047.653 289.57
   LOCATION L0001036     VOLUME   367125.113 3792063.419 290.02
   LOCATION L0001037     VOLUME   367143.372 3792079.185 290.42
   LOCATION L0001038     VOLUME   367161.631 3792094.952 290.75
   LOCATION L0001039     VOLUME   367179.891 3792110.718 290.99
   LOCATION L0001040     VOLUME   367198.150 3792126.484 291.39
   LOCATION L0001041     VOLUME   367216.409 3792142.251 291.88
   LOCATION L0001042     VOLUME   367234.669 3792158.017 292.29
   LOCATION L0001043     VOLUME   367252.928 3792173.783 292.62
   LOCATION L0001044     VOLUME   367271.187 3792189.550 292.86
   LOCATION L0001045     VOLUME   367289.447 3792205.316 293.07
** End of LINE VOLUME Source ID = RDOFFSITE
** Source Parameters **
   SRCPARAM EQUIP1          0.0051     3.840   366.000  51.71000     0.100
   SRCPARAM EQUIP2          0.0051     3.840   366.000  51.71000     0.100
   SRCPARAM EQUIP3          0.0051     3.840   366.000  51.71000     0.100
   SRCPARAM EQUIP4          0.0051     3.840   366.000  51.71000     0.100
   SRCPARAM EQUIP5          0.0051     3.840   366.000  51.71000     0.100
   SRCPARAM EQUIP6          0.0051     3.840   366.000  51.71000     0.100
   SRCPARAM IDLEN        0.00005625     3.840   366.000  51.71000     0.100
   SRCPARAM IDLES        0.00005625     3.840   366.000  51.71000     0.100
** LINE VOLUME Source ID = RDONNDEV
   SRCPARAM L0000713     0.00000002661      1.83      3.38      0.85
   SRCPARAM L0000714     0.00000002661      1.83      3.38      0.85
```

SRCPARAM	L0000715	0.00000002661	1.83	3.38	0.85
SRCPARAM	L0000716	0.00000002661	1.83	3.38	0.85
SRCPARAM	L0000717	0.00000002661	1.83	3.38	0.85
SRCPARAM	L0000718	0.00000002661	1.83	3.38	0.85
SRCPARAM	L0000719	0.00000002661	1.83	3.38	0.85
SRCPARAM	L0000720	0.00000002661	1.83	3.38	0.85
SRCPARAM	L0000721	0.00000002661	1.83	3.38	0.85
SRCPARAM	L0000722	0.00000002661	1.83	3.38	0.85
SRCPARAM	L0000723	0.00000002661	1.83	3.38	0.85
SRCPARAM	L0000724	0.00000002661	1.83	3.38	0.85
SRCPARAM	L0000725	0.00000002661	1.83	3.38	0.85
SRCPARAM	L0000726	0.00000002661	1.83	3.38	0.85
SRCPARAM	L0000727	0.00000002661	1.83	3.38	0.85
SRCPARAM	L0000728	0.00000002661	1.83	3.38	0.85
SRCPARAM	L0000729	0.00000002661	1.83	3.38	0.85
SRCPARAM	L0000730	0.00000002661	1.83	3.38	0.85
SRCPARAM	L0000731	0.00000002661	1.83	3.38	0.85
SRCPARAM	L0000732	0.00000002661	1.83	3.38	0.85
SRCPARAM	L0000733	0.00000002661	1.83	3.38	0.85
SRCPARAM	L0000734	0.00000002661	1.83	3.38	0.85
SRCPARAM	L0000735	0.00000002661	1.83	3.38	0.85
SRCPARAM	L0000736	0.00000002661	1.83	3.38	0.85
SRCPARAM	L0000737	0.00000002661	1.83	3.38	0.85
SRCPARAM	L0000738	0.00000002661	1.83	3.38	0.85
SRCPARAM	L0000739	0.00000002661	1.83	3.38	0.85
SRCPARAM	L0000740	0.00000002661	1.83	3.38	0.85
SRCPARAM	L0000741	0.00000002661	1.83	3.38	0.85
SRCPARAM	L0000742	0.00000002661	1.83	3.38	0.85
SRCPARAM	L0000743	0.00000002661	1.83	3.38	0.85
SRCPARAM	L0000744	0.00000002661	1.83	3.38	0.85
SRCPARAM	L0000745	0.00000002661	1.83	3.38	0.85
SRCPARAM	L0000746	0.00000002661	1.83	3.38	0.85
SRCPARAM	L0000747	0.00000002661	1.83	3.38	0.85
SRCPARAM	L0000748	0.00000002661	1.83	3.38	0.85
SRCPARAM	L0000749	0.00000002661	1.83	3.38	0.85
SRCPARAM	L0000750	0.00000002661	1.83	3.38	0.85
SRCPARAM	L0000751	0.00000002661	1.83	3.38	0.85
SRCPARAM	L0000752	0.00000002661	1.83	3.38	0.85
SRCPARAM	L0000753	0.00000002661	1.83	3.38	0.85
SRCPARAM	L0000754	0.00000002661	1.83	3.38	0.85
SRCPARAM	L0000755	0.00000002661	1.83	3.38	0.85
SRCPARAM	L0000756	0.00000002661	1.83	3.38	0.85
SRCPARAM	L0000757	0.00000002661	1.83	3.38	0.85
SRCPARAM	L0000758	0.00000002661	1.83	3.38	0.85
SRCPARAM	L0000759	0.00000002661	1.83	3.38	0.85
SRCPARAM	L0000760	0.00000002661	1.83	3.38	0.85
SRCPARAM	L0000761	0.00000002661	1.83	3.38	0.85
SRCPARAM	L0000762	0.00000002661	1.83	3.38	0.85
SRCPARAM	L0000763	0.00000002661	1.83	3.38	0.85
SRCPARAM	L0000764	0.00000002661	1.83	3.38	0.85
SRCPARAM	L0000765	0.00000002661	1.83	3.38	0.85
SRCPARAM	L0000766	0.00000002661	1.83	3.38	0.85
SRCPARAM	L0000767	0.00000002661	1.83	3.38	0.85
SRCPARAM	L0000768	0.00000002661	1.83	3.38	0.85
SRCPARAM	L0000769	0.00000002661	1.83	3.38	0.85
SRCPARAM	L0000770	0.00000002661	1.83	3.38	0.85
SRCPARAM	L0000771	0.00000002661	1.83	3.38	0.85
SRCPARAM	L0000772	0.00000002661	1.83	3.38	0.85
SRCPARAM	L0000773	0.00000002661	1.83	3.38	0.85
SRCPARAM	L0000774	0.00000002661	1.83	3.38	0.85
SRCPARAM	L0000775	0.00000002661	1.83	3.38	0.85
SRCPARAM	L0000776	0.00000002661	1.83	3.38	0.85
SRCPARAM	L0000777	0.00000002661	1.83	3.38	0.85
SRCPARAM	L0000778	0.00000002661	1.83	3.38	0.85
SRCPARAM	L0000779	0.00000002661	1.83	3.38	0.85
SRCPARAM	L0000780	0.00000002661	1.83	3.38	0.85
SRCPARAM	L0000781	0.00000002661	1.83	3.38	0.85
SRCPARAM	L0000782	0.00000002661	1.83	3.38	0.85
SRCPARAM	L0000783	0.00000002661	1.83	3.38	0.85
SRCPARAM	L0000784	0.00000002661	1.83	3.38	0.85
SRCPARAM	L0000785	0.00000002661	1.83	3.38	0.85
SRCPARAM	L0000786	0.00000002661	1.83	3.38	0.85
SRCPARAM	L0000787	0.00000002661	1.83	3.38	0.85
SRCPARAM	L0000788	0.00000002661	1.83	3.38	0.85
SRCPARAM	L0000789	0.00000002661	1.83	3.38	0.85
SRCPARAM	L0000790	0.00000002661	1.83	3.38	0.85

```
   SRCPARAM L0000791     0.00000002661      1.83      3.38      0.85
   SRCPARAM L0000792     0.00000002661      1.83      3.38      0.85
   SRCPARAM L0000793     0.00000002661      1.83      3.38      0.85
   SRCPARAM L0000794     0.00000002661      1.83      3.38      0.85
   SRCPARAM L0000795     0.00000002661      1.83      3.38      0.85
   SRCPARAM L0000796     0.00000002661      1.83      3.38      0.85
   SRCPARAM L0000797     0.00000002661      1.83      3.38      0.85
   SRCPARAM L0000798     0.00000002661      1.83      3.38      0.85
   SRCPARAM L0000799     0.00000002661      1.83      3.38      0.85
   SRCPARAM L0000800     0.00000002661      1.83      3.38      0.85
   SRCPARAM L0000801     0.00000002661      1.83      3.38      0.85
   SRCPARAM L0000802     0.00000002661      1.83      3.38      0.85
   SRCPARAM L0000803     0.00000002661      1.83      3.38      0.85
   SRCPARAM L0000804     0.00000002661      1.83      3.38      0.85
   SRCPARAM L0000805     0.00000002661      1.83      3.38      0.85
   SRCPARAM L0000806     0.00000002661      1.83      3.38      0.85
   SRCPARAM L0000807     0.00000002661      1.83      3.38      0.85
   SRCPARAM L0000808     0.00000002661      1.83      3.38      0.85
   SRCPARAM L0000809     0.00000002661      1.83      3.38      0.85
   SRCPARAM L0000810     0.00000002661      1.83      3.38      0.85
   SRCPARAM L0000811     0.00000002661      1.83      3.38      0.85
   SRCPARAM L0000812     0.00000002661      1.83      3.38      0.85
   SRCPARAM L0000813     0.00000002661      1.83      3.38      0.85
   SRCPARAM L0000814     0.00000002661      1.83      3.38      0.85
   SRCPARAM L0000815     0.00000002661      1.83      3.38      0.85
   SRCPARAM L0000816     0.00000002661      1.83      3.38      0.85
   SRCPARAM L0000817     0.00000002661      1.83      3.38      0.85
   SRCPARAM L0000818     0.00000002661      1.83      3.38      0.85
   SRCPARAM L0000819     0.00000002661      1.83      3.38      0.85
   SRCPARAM L0000820     0.00000002661      1.83      3.38      0.85
   SRCPARAM L0000821     0.00000002661      1.83      3.38      0.85
   SRCPARAM L0000822     0.00000002661      1.83      3.38      0.85
   SRCPARAM L0000823     0.00000002661      1.83      3.38      0.85
   SRCPARAM L0000824     0.00000002661      1.83      3.38      0.85
   SRCPARAM L0000825     0.00000002661      1.83      3.38      0.85
** ---------------------------------------------------------------------
** LINE VOLUME Source ID = RDONSDEV
   SRCPARAM L0000826     0.00000001728      1.83      3.38      0.85
   SRCPARAM L0000827     0.00000001728      1.83      3.38      0.85
   SRCPARAM L0000828     0.00000001728      1.83      3.38      0.85
   SRCPARAM L0000829     0.00000001728      1.83      3.38      0.85
   SRCPARAM L0000830     0.00000001728      1.83      3.38      0.85
   SRCPARAM L0000831     0.00000001728      1.83      3.38      0.85
   SRCPARAM L0000832     0.00000001728      1.83      3.38      0.85
   SRCPARAM L0000833     0.00000001728      1.83      3.38      0.85
   SRCPARAM L0000834     0.00000001728      1.83      3.38      0.85
   SRCPARAM L0000835     0.00000001728      1.83      3.38      0.85
   SRCPARAM L0000836     0.00000001728      1.83      3.38      0.85
   SRCPARAM L0000837     0.00000001728      1.83      3.38      0.85
   SRCPARAM L0000838     0.00000001728      1.83      3.38      0.85
   SRCPARAM L0000839     0.00000001728      1.83      3.38      0.85
   SRCPARAM L0000840     0.00000001728      1.83      3.38      0.85
   SRCPARAM L0000841     0.00000001728      1.83      3.38      0.85
   SRCPARAM L0000842     0.00000001728      1.83      3.38      0.85
   SRCPARAM L0000843     0.00000001728      1.83      3.38      0.85
   SRCPARAM L0000844     0.00000001728      1.83      3.38      0.85
   SRCPARAM L0000845     0.00000001728      1.83      3.38      0.85
   SRCPARAM L0000846     0.00000001728      1.83      3.38      0.85
   SRCPARAM L0000847     0.00000001728      1.83      3.38      0.85
   SRCPARAM L0000848     0.00000001728      1.83      3.38      0.85
   SRCPARAM L0000849     0.00000001728      1.83      3.38      0.85
   SRCPARAM L0000850     0.00000001728      1.83      3.38      0.85
   SRCPARAM L0000851     0.00000001728      1.83      3.38      0.85
   SRCPARAM L0000852     0.00000001728      1.83      3.38      0.85
   SRCPARAM L0000853     0.00000001728      1.83      3.38      0.85
   SRCPARAM L0000854     0.00000001728      1.83      3.38      0.85
   SRCPARAM L0000855     0.00000001728      1.83      3.38      0.85
   SRCPARAM L0000856     0.00000001728      1.83      3.38      0.85
   SRCPARAM L0000857     0.00000001728      1.83      3.38      0.85
   SRCPARAM L0000858     0.00000001728      1.83      3.38      0.85
   SRCPARAM L0000859     0.00000001728      1.83      3.38      0.85
   SRCPARAM L0000860     0.00000001728      1.83      3.38      0.85
   SRCPARAM L0000861     0.00000001728      1.83      3.38      0.85
   SRCPARAM L0000862     0.00000001728      1.83      3.38      0.85
   SRCPARAM L0000863     0.00000001728      1.83      3.38      0.85
   SRCPARAM L0000864     0.00000001728      1.83      3.38      0.85
```

SRCPARAM	L0000865	0.00000001728	1.83	3.38	0.85
SRCPARAM	L0000866	0.00000001728	1.83	3.38	0.85
SRCPARAM	L0000867	0.00000001728	1.83	3.38	0.85
SRCPARAM	L0000868	0.00000001728	1.83	3.38	0.85
SRCPARAM	L0000869	0.00000001728	1.83	3.38	0.85
SRCPARAM	L0000870	0.00000001728	1.83	3.38	0.85
SRCPARAM	L0000871	0.00000001728	1.83	3.38	0.85
SRCPARAM	L0000872	0.00000001728	1.83	3.38	0.85
SRCPARAM	L0000873	0.00000001728	1.83	3.38	0.85
SRCPARAM	L0000874	0.00000001728	1.83	3.38	0.85
SRCPARAM	L0000875	0.00000001728	1.83	3.38	0.85
SRCPARAM	L0000876	0.00000001728	1.83	3.38	0.85
SRCPARAM	L0000877	0.00000001728	1.83	3.38	0.85
SRCPARAM	L0000878	0.00000001728	1.83	3.38	0.85
SRCPARAM	L0000879	0.00000001728	1.83	3.38	0.85
SRCPARAM	L0000880	0.00000001728	1.83	3.38	0.85
SRCPARAM	L0000881	0.00000001728	1.83	3.38	0.85
SRCPARAM	L0000882	0.00000001728	1.83	3.38	0.85
SRCPARAM	L0000883	0.00000001728	1.83	3.38	0.85
SRCPARAM	L0000884	0.00000001728	1.83	3.38	0.85
SRCPARAM	L0000885	0.00000001728	1.83	3.38	0.85
SRCPARAM	L0000886	0.00000001728	1.83	3.38	0.85
SRCPARAM	L0000887	0.00000001728	1.83	3.38	0.85
SRCPARAM	L0000888	0.00000001728	1.83	3.38	0.85
SRCPARAM	L0000889	0.00000001728	1.83	3.38	0.85
SRCPARAM	L0000890	0.00000001728	1.83	3.38	0.85
SRCPARAM	L0000891	0.00000001728	1.83	3.38	0.85
SRCPARAM	L0000892	0.00000001728	1.83	3.38	0.85
SRCPARAM	L0000893	0.00000001728	1.83	3.38	0.85
SRCPARAM	L0000894	0.00000001728	1.83	3.38	0.85
SRCPARAM	L0000895	0.00000001728	1.83	3.38	0.85
SRCPARAM	L0000896	0.00000001728	1.83	3.38	0.85
SRCPARAM	L0000897	0.00000001728	1.83	3.38	0.85
SRCPARAM	L0000898	0.00000001728	1.83	3.38	0.85
SRCPARAM	L0000899	0.00000001728	1.83	3.38	0.85
SRCPARAM	L0000900	0.00000001728	1.83	3.38	0.85
SRCPARAM	L0000901	0.00000001728	1.83	3.38	0.85
SRCPARAM	L0000902	0.00000001728	1.83	3.38	0.85
SRCPARAM	L0000903	0.00000001728	1.83	3.38	0.85
SRCPARAM	L0000904	0.00000001728	1.83	3.38	0.85
SRCPARAM	L0000905	0.00000001728	1.83	3.38	0.85
SRCPARAM	L0000906	0.00000001728	1.83	3.38	0.85
SRCPARAM	L0000907	0.00000001728	1.83	3.38	0.85
SRCPARAM	L0000908	0.00000001728	1.83	3.38	0.85
SRCPARAM	L0000909	0.00000001728	1.83	3.38	0.85
SRCPARAM	L0000910	0.00000001728	1.83	3.38	0.85
SRCPARAM	L0000911	0.00000001728	1.83	3.38	0.85
SRCPARAM	L0000912	0.00000001728	1.83	3.38	0.85
SRCPARAM	L0000913	0.00000001728	1.83	3.38	0.85
SRCPARAM	L0000914	0.00000001728	1.83	3.38	0.85
SRCPARAM	L0000915	0.00000001728	1.83	3.38	0.85
SRCPARAM	L0000916	0.00000001728	1.83	3.38	0.85
SRCPARAM	L0000917	0.00000001728	1.83	3.38	0.85
SRCPARAM	L0000918	0.00000001728	1.83	3.38	0.85
SRCPARAM	L0000919	0.00000001728	1.83	3.38	0.85
SRCPARAM	L0000920	0.00000001728	1.83	3.38	0.85
SRCPARAM	L0000921	0.00000001728	1.83	3.38	0.85
SRCPARAM	L0000922	0.00000001728	1.83	3.38	0.85
SRCPARAM	L0000923	0.00000001728	1.83	3.38	0.85
SRCPARAM	L0000924	0.00000001728	1.83	3.38	0.85
SRCPARAM	L0000925	0.00000001728	1.83	3.38	0.85
SRCPARAM	L0000926	0.00000001728	1.83	3.38	0.85
SRCPARAM	L0000927	0.00000001728	1.83	3.38	0.85
SRCPARAM	L0000928	0.00000001728	1.83	3.38	0.85
SRCPARAM	L0000929	0.00000001728	1.83	3.38	0.85
SRCPARAM	L0000930	0.00000001728	1.83	3.38	0.85
SRCPARAM	L0000931	0.00000001728	1.83	3.38	0.85
SRCPARAM	L0000932	0.00000001728	1.83	3.38	0.85
SRCPARAM	L0000933	0.00000001728	1.83	3.38	0.85
SRCPARAM	L0000934	0.00000001728	1.83	3.38	0.85
SRCPARAM	L0000935	0.00000001728	1.83	3.38	0.85
SRCPARAM	L0000936	0.00000001728	1.83	3.38	0.85
SRCPARAM	L0000937	0.00000001728	1.83	3.38	0.85
SRCPARAM	L0000938	0.00000001728	1.83	3.38	0.85
SRCPARAM	L0000939	0.00000001728	1.83	3.38	0.85
SRCPARAM	L0000940	0.00000001728	1.83	3.38	0.85

```
   SRCPARAM L0000941     0.00000001728      1.83      3.38      0.85
   SRCPARAM L0000942     0.00000001728      1.83      3.38      0.85
   SRCPARAM L0000943     0.00000001728      1.83      3.38      0.85
   SRCPARAM L0000944     0.00000001728      1.83      3.38      0.85
   SRCPARAM L0000945     0.00000001728      1.83      3.38      0.85
   SRCPARAM L0000946     0.00000001728      1.83      3.38      0.85
   SRCPARAM L0000947     0.00000001728      1.83      3.38      0.85
   SRCPARAM L0000948     0.00000001728      1.83      3.38      0.85
   SRCPARAM L0000949     0.00000001728      1.83      3.38      0.85
   SRCPARAM L0000950     0.00000001728      1.83      3.38      0.85
   SRCPARAM L0000951     0.00000001728      1.83      3.38      0.85
   SRCPARAM L0000952     0.00000001728      1.83      3.38      0.85
   SRCPARAM L0000953     0.00000001728      1.83      3.38      0.85
   SRCPARAM L0000954     0.00000001728      1.83      3.38      0.85
   SRCPARAM L0000955     0.00000001728      1.83      3.38      0.85
   SRCPARAM L0000956     0.00000001728      1.83      3.38      0.85
   SRCPARAM L0000957     0.00000001728      1.83      3.38      0.85
   SRCPARAM L0000958     0.00000001728      1.83      3.38      0.85
   SRCPARAM L0000959     0.00000001728      1.83      3.38      0.85
   SRCPARAM L0000960     0.00000001728      1.83      3.38      0.85
   SRCPARAM L0000961     0.00000001728      1.83      3.38      0.85
   SRCPARAM L0000962     0.00000001728      1.83      3.38      0.85
   SRCPARAM L0000963     0.00000001728      1.83      3.38      0.85
   SRCPARAM L0000964     0.00000001728      1.83      3.38      0.85
   SRCPARAM L0000965     0.00000001728      1.83      3.38      0.85
   SRCPARAM L0000966     0.00000001728      1.83      3.38      0.85
   SRCPARAM L0000967     0.00000001728      1.83      3.38      0.85
   SRCPARAM L0000968     0.00000001728      1.83      3.38      0.85
   SRCPARAM L0000969     0.00000001728      1.83      3.38      0.85
   SRCPARAM L0000970     0.00000001728      1.83      3.38      0.85
   SRCPARAM L0000971     0.00000001728      1.83      3.38      0.85
   SRCPARAM L0000972     0.00000001728      1.83      3.38      0.85
   SRCPARAM L0000973     0.00000001728      1.83      3.38      0.85
   SRCPARAM L0000974     0.00000001728      1.83      3.38      0.85
   SRCPARAM L0000975     0.00000001728      1.83      3.38      0.85
   SRCPARAM L0000976     0.00000001728      1.83      3.38      0.85
   SRCPARAM L0000977     0.00000001728      1.83      3.38      0.85
   SRCPARAM L0000978     0.00000001728      1.83      3.38      0.85
   SRCPARAM L0000979     0.00000001728      1.83      3.38      0.85
   SRCPARAM L0000980     0.00000001728      1.83      3.38      0.85
   SRCPARAM L0000981     0.00000001728      1.83      3.38      0.85
   SRCPARAM L0000982     0.00000001728      1.83      3.38      0.85
   SRCPARAM L0000983     0.00000001728      1.83      3.38      0.85
   SRCPARAM L0000984     0.00000001728      1.83      3.38      0.85
   SRCPARAM L0000985     0.00000001728      1.83      3.38      0.85
   SRCPARAM L0000986     0.00000001728      1.83      3.38      0.85
   SRCPARAM L0000987     0.00000001728      1.83      3.38      0.85
   SRCPARAM L0000988     0.00000001728      1.83      3.38      0.85
   SRCPARAM L0000989     0.00000001728      1.83      3.38      0.85
   SRCPARAM L0000990     0.00000001728      1.83      3.38      0.85
   SRCPARAM L0000991     0.00000001728      1.83      3.38      0.85
   SRCPARAM L0000992     0.00000001728      1.83      3.38      0.85
   SRCPARAM L0000993     0.00000001728      1.83      3.38      0.85
   SRCPARAM L0000994     0.00000001728      1.83      3.38      0.85
   SRCPARAM L0000995     0.00000001728      1.83      3.38      0.85
   SRCPARAM L0000996     0.00000001728      1.83      3.38      0.85
   SRCPARAM L0000997     0.00000001728      1.83      3.38      0.85
   SRCPARAM L0000998     0.00000001728      1.83      3.38      0.85
   SRCPARAM L0000999     0.00000001728      1.83      3.38      0.85
** ------------------------------------------------------------------
** LINE VOLUME Source ID = RDOFFSITE
   SRCPARAM L0001000     0.0000001875      1.83     11.22      0.85
   SRCPARAM L0001001     0.0000001875      1.83     11.22      0.85
   SRCPARAM L0001002     0.0000001875      1.83     11.22      0.85
   SRCPARAM L0001003     0.0000001875      1.83     11.22      0.85
   SRCPARAM L0001004     0.0000001875      1.83     11.22      0.85
   SRCPARAM L0001005     0.0000001875      1.83     11.22      0.85
   SRCPARAM L0001006     0.0000001875      1.83     11.22      0.85
   SRCPARAM L0001007     0.0000001875      1.83     11.22      0.85
   SRCPARAM L0001008     0.0000001875      1.83     11.22      0.85
   SRCPARAM L0001009     0.0000001875      1.83     11.22      0.85
   SRCPARAM L0001010     0.0000001875      1.83     11.22      0.85
   SRCPARAM L0001011     0.0000001875      1.83     11.22      0.85
   SRCPARAM L0001012     0.0000001875      1.83     11.22      0.85
   SRCPARAM L0001013     0.0000001875      1.83     11.22      0.85
   SRCPARAM L0001014     0.0000001875      1.83     11.22      0.85
```

```
   SRCPARAM L0001015     0.0000001875      1.83     11.22      0.85
   SRCPARAM L0001016     0.0000001875      1.83     11.22      0.85
   SRCPARAM L0001017     0.0000001875      1.83     11.22      0.85
   SRCPARAM L0001018     0.0000001875      1.83     11.22      0.85
   SRCPARAM L0001019     0.0000001875      1.83     11.22      0.85
   SRCPARAM L0001020     0.0000001875      1.83     11.22      0.85
   SRCPARAM L0001021     0.0000001875      1.83     11.22      0.85
   SRCPARAM L0001022     0.0000001875      1.83     11.22      0.85
   SRCPARAM L0001023     0.0000001875      1.83     11.22      0.85
   SRCPARAM L0001024     0.0000001875      1.83     11.22      0.85
   SRCPARAM L0001025     0.0000001875      1.83     11.22      0.85
   SRCPARAM L0001026     0.0000001875      1.83     11.22      0.85
   SRCPARAM L0001027     0.0000001875      1.83     11.22      0.85
   SRCPARAM L0001028     0.0000001875      1.83     11.22      0.85
   SRCPARAM L0001029     0.0000001875      1.83     11.22      0.85
   SRCPARAM L0001030     0.0000001875      1.83     11.22      0.85
   SRCPARAM L0001031     0.0000001875      1.83     11.22      0.85
   SRCPARAM L0001032     0.0000001875      1.83     11.22      0.85
   SRCPARAM L0001033     0.0000001875      1.83     11.22      0.85
   SRCPARAM L0001034     0.0000001875      1.83     11.22      0.85
   SRCPARAM L0001035     0.0000001875      1.83     11.22      0.85
   SRCPARAM L0001036     0.0000001875      1.83     11.22      0.85
   SRCPARAM L0001037     0.0000001875      1.83     11.22      0.85
   SRCPARAM L0001038     0.0000001875      1.83     11.22      0.85
   SRCPARAM L0001039     0.0000001875      1.83     11.22      0.85
   SRCPARAM L0001040     0.0000001875      1.83     11.22      0.85
   SRCPARAM L0001041     0.0000001875      1.83     11.22      0.85
   SRCPARAM L0001042     0.0000001875      1.83     11.22      0.85
   SRCPARAM L0001043     0.0000001875      1.83     11.22      0.85
   SRCPARAM L0001044     0.0000001875      1.83     11.22      0.85
   SRCPARAM L0001045     0.0000001875      1.83     11.22      0.85
** ----------------------------------------------------------------------
   URBANSRC ALL

** Variable Emissions Type: "By Hour-of-Day (HROFDY)"
** Variable Emission Scenario: "Scenario 2"
   EMISFACT EQUIP1       HROFDY 0.0 0.0 0.0 0.0 0.0 0.0
   EMISFACT EQUIP1       HROFDY 0.0 1.0 1.0 1.0 1.0 1.0
   EMISFACT EQUIP1       HROFDY 1.0 1.0 1.0 1.0 1.0 1.0
   EMISFACT EQUIP1       HROFDY 1.0 0.0 0.0 0.0 0.0 0.0
   EMISFACT EQUIP2       HROFDY 0.0 0.0 0.0 0.0 0.0 0.0
   EMISFACT EQUIP2       HROFDY 0.0 1.0 1.0 1.0 1.0 1.0
   EMISFACT EQUIP2       HROFDY 1.0 1.0 1.0 1.0 1.0 1.0
   EMISFACT EQUIP2       HROFDY 1.0 0.0 0.0 0.0 0.0 0.0
   EMISFACT EQUIP3       HROFDY 0.0 0.0 0.0 0.0 0.0 0.0
   EMISFACT EQUIP3       HROFDY 0.0 1.0 1.0 1.0 1.0 1.0
   EMISFACT EQUIP3       HROFDY 1.0 1.0 1.0 1.0 1.0 1.0
   EMISFACT EQUIP3       HROFDY 1.0 0.0 0.0 0.0 0.0 0.0
   EMISFACT EQUIP4       HROFDY 0.0 0.0 0.0 0.0 0.0 0.0
   EMISFACT EQUIP4       HROFDY 0.0 1.0 1.0 1.0 1.0 1.0
   EMISFACT EQUIP4       HROFDY 1.0 1.0 1.0 1.0 1.0 1.0
   EMISFACT EQUIP4       HROFDY 1.0 0.0 0.0 0.0 0.0 0.0
   EMISFACT EQUIP5       HROFDY 0.0 0.0 0.0 0.0 0.0 0.0
   EMISFACT EQUIP5       HROFDY 0.0 1.0 1.0 1.0 1.0 1.0
   EMISFACT EQUIP5       HROFDY 1.0 1.0 1.0 1.0 1.0 1.0
   EMISFACT EQUIP5       HROFDY 1.0 0.0 0.0 0.0 0.0 0.0
   EMISFACT EQUIP6       HROFDY 0.0 0.0 0.0 0.0 0.0 0.0
   EMISFACT EQUIP6       HROFDY 0.0 1.0 1.0 1.0 1.0 1.0
   EMISFACT EQUIP6       HROFDY 1.0 1.0 1.0 1.0 1.0 1.0
   EMISFACT EQUIP6       HROFDY 1.0 0.0 0.0 0.0 0.0 0.0
   EMISFACT IDLEN        HROFDY 0.0 0.0 0.0 0.0 0.0 0.0
   EMISFACT IDLEN        HROFDY 0.0 1.0 1.0 1.0 1.0 1.0
   EMISFACT IDLEN        HROFDY 1.0 1.0 1.0 1.0 1.0 1.0
   EMISFACT IDLEN        HROFDY 1.0 0.0 0.0 0.0 0.0 0.0
   EMISFACT IDLES        HROFDY 0.0 0.0 0.0 0.0 0.0 0.0
   EMISFACT IDLES        HROFDY 0.0 1.0 1.0 1.0 1.0 1.0
   EMISFACT IDLES        HROFDY 1.0 1.0 1.0 1.0 1.0 1.0
   EMISFACT IDLES        HROFDY 1.0 0.0 0.0 0.0 0.0 0.0
   EMISFACT L0000713     HROFDY 0.0 0.0 0.0 0.0 0.0 0.0
   EMISFACT L0000713     HROFDY 0.0 1.0 1.0 1.0 1.0 1.0
   EMISFACT L0000713     HROFDY 1.0 1.0 1.0 1.0 1.0 1.0
   EMISFACT L0000713     HROFDY 1.0 0.0 0.0 0.0 0.0 0.0
   EMISFACT L0000714     HROFDY 0.0 0.0 0.0 0.0 0.0 0.0
   EMISFACT L0000714     HROFDY 0.0 1.0 1.0 1.0 1.0 1.0
   EMISFACT L0000714     HROFDY 1.0 1.0 1.0 1.0 1.0 1.0
   EMISFACT L0000714     HROFDY 1.0 0.0 0.0 0.0 0.0 0.0
```

```
EMISFACT L0000715     HROFDY 0.0 0.0 0.0 0.0 0.0 0.0
EMISFACT L0000715     HROFDY 0.0 1.0 1.0 1.0 1.0 1.0
EMISFACT L0000715     HROFDY 1.0 1.0 1.0 1.0 1.0 1.0
EMISFACT L0000715     HROFDY 1.0 0.0 0.0 0.0 0.0 0.0
EMISFACT L0000716     HROFDY 0.0 0.0 0.0 0.0 0.0 0.0
EMISFACT L0000716     HROFDY 0.0 1.0 1.0 1.0 1.0 1.0
EMISFACT L0000716     HROFDY 1.0 1.0 1.0 1.0 1.0 1.0
EMISFACT L0000716     HROFDY 1.0 0.0 0.0 0.0 0.0 0.0
EMISFACT L0000717     HROFDY 0.0 0.0 0.0 0.0 0.0 0.0
EMISFACT L0000717     HROFDY 0.0 1.0 1.0 1.0 1.0 1.0
EMISFACT L0000717     HROFDY 1.0 1.0 1.0 1.0 1.0 1.0
EMISFACT L0000717     HROFDY 1.0 0.0 0.0 0.0 0.0 0.0
EMISFACT L0000718     HROFDY 0.0 0.0 0.0 0.0 0.0 0.0
EMISFACT L0000718     HROFDY 0.0 1.0 1.0 1.0 1.0 1.0
EMISFACT L0000718     HROFDY 1.0 1.0 1.0 1.0 1.0 1.0
EMISFACT L0000718     HROFDY 1.0 0.0 0.0 0.0 0.0 0.0
EMISFACT L0000719     HROFDY 0.0 0.0 0.0 0.0 0.0 0.0
EMISFACT L0000719     HROFDY 0.0 1.0 1.0 1.0 1.0 1.0
EMISFACT L0000719     HROFDY 1.0 1.0 1.0 1.0 1.0 1.0
EMISFACT L0000719     HROFDY 1.0 0.0 0.0 0.0 0.0 0.0
EMISFACT L0000720     HROFDY 0.0 0.0 0.0 0.0 0.0 0.0
EMISFACT L0000720     HROFDY 0.0 1.0 1.0 1.0 1.0 1.0
EMISFACT L0000720     HROFDY 1.0 1.0 1.0 1.0 1.0 1.0
EMISFACT L0000720     HROFDY 1.0 0.0 0.0 0.0 0.0 0.0
EMISFACT L0000721     HROFDY 0.0 0.0 0.0 0.0 0.0 0.0
EMISFACT L0000721     HROFDY 0.0 1.0 1.0 1.0 1.0 1.0
EMISFACT L0000721     HROFDY 1.0 1.0 1.0 1.0 1.0 1.0
EMISFACT L0000721     HROFDY 1.0 0.0 0.0 0.0 0.0 0.0
EMISFACT L0000722     HROFDY 0.0 0.0 0.0 0.0 0.0 0.0
EMISFACT L0000722     HROFDY 0.0 1.0 1.0 1.0 1.0 1.0
EMISFACT L0000722     HROFDY 1.0 1.0 1.0 1.0 1.0 1.0
EMISFACT L0000722     HROFDY 1.0 0.0 0.0 0.0 0.0 0.0
EMISFACT L0000723     HROFDY 0.0 0.0 0.0 0.0 0.0 0.0
EMISFACT L0000723     HROFDY 0.0 1.0 1.0 1.0 1.0 1.0
EMISFACT L0000723     HROFDY 1.0 1.0 1.0 1.0 1.0 1.0
EMISFACT L0000723     HROFDY 1.0 0.0 0.0 0.0 0.0 0.0
EMISFACT L0000724     HROFDY 0.0 0.0 0.0 0.0 0.0 0.0
EMISFACT L0000724     HROFDY 0.0 1.0 1.0 1.0 1.0 1.0
EMISFACT L0000724     HROFDY 1.0 1.0 1.0 1.0 1.0 1.0
EMISFACT L0000724     HROFDY 1.0 0.0 0.0 0.0 0.0 0.0
EMISFACT L0000725     HROFDY 0.0 0.0 0.0 0.0 0.0 0.0
EMISFACT L0000725     HROFDY 0.0 1.0 1.0 1.0 1.0 1.0
EMISFACT L0000725     HROFDY 1.0 1.0 1.0 1.0 1.0 1.0
EMISFACT L0000725     HROFDY 1.0 0.0 0.0 0.0 0.0 0.0
EMISFACT L0000726     HROFDY 0.0 0.0 0.0 0.0 0.0 0.0
EMISFACT L0000726     HROFDY 0.0 1.0 1.0 1.0 1.0 1.0
EMISFACT L0000726     HROFDY 1.0 1.0 1.0 1.0 1.0 1.0
EMISFACT L0000726     HROFDY 1.0 0.0 0.0 0.0 0.0 0.0
EMISFACT L0000727     HROFDY 0.0 0.0 0.0 0.0 0.0 0.0
EMISFACT L0000727     HROFDY 0.0 1.0 1.0 1.0 1.0 1.0
EMISFACT L0000727     HROFDY 1.0 1.0 1.0 1.0 1.0 1.0
EMISFACT L0000727     HROFDY 1.0 0.0 0.0 0.0 0.0 0.0
EMISFACT L0000728     HROFDY 0.0 0.0 0.0 0.0 0.0 0.0
EMISFACT L0000728     HROFDY 0.0 1.0 1.0 1.0 1.0 1.0
EMISFACT L0000728     HROFDY 1.0 1.0 1.0 1.0 1.0 1.0
EMISFACT L0000728     HROFDY 1.0 0.0 0.0 0.0 0.0 0.0
EMISFACT L0000729     HROFDY 0.0 0.0 0.0 0.0 0.0 0.0
EMISFACT L0000729     HROFDY 0.0 1.0 1.0 1.0 1.0 1.0
EMISFACT L0000729     HROFDY 1.0 1.0 1.0 1.0 1.0 1.0
EMISFACT L0000729     HROFDY 1.0 0.0 0.0 0.0 0.0 0.0
EMISFACT L0000730     HROFDY 0.0 0.0 0.0 0.0 0.0 0.0
EMISFACT L0000730     HROFDY 0.0 1.0 1.0 1.0 1.0 1.0
EMISFACT L0000730     HROFDY 1.0 1.0 1.0 1.0 1.0 1.0
EMISFACT L0000730     HROFDY 1.0 0.0 0.0 0.0 0.0 0.0
EMISFACT L0000731     HROFDY 0.0 0.0 0.0 0.0 0.0 0.0
EMISFACT L0000731     HROFDY 0.0 1.0 1.0 1.0 1.0 1.0
EMISFACT L0000731     HROFDY 1.0 1.0 1.0 1.0 1.0 1.0
EMISFACT L0000731     HROFDY 1.0 0.0 0.0 0.0 0.0 0.0
EMISFACT L0000732     HROFDY 0.0 0.0 0.0 0.0 0.0 0.0
EMISFACT L0000732     HROFDY 0.0 1.0 1.0 1.0 1.0 1.0
EMISFACT L0000732     HROFDY 1.0 1.0 1.0 1.0 1.0 1.0
EMISFACT L0000732     HROFDY 1.0 0.0 0.0 0.0 0.0 0.0
EMISFACT L0000733     HROFDY 0.0 0.0 0.0 0.0 0.0 0.0
EMISFACT L0000733     HROFDY 0.0 1.0 1.0 1.0 1.0 1.0
EMISFACT L0000733     HROFDY 1.0 1.0 1.0 1.0 1.0 1.0
EMISFACT L0000733     HROFDY 1.0 0.0 0.0 0.0 0.0 0.0
```

```
EMISFACT L0000734     HROFDY 0.0 0.0 0.0 0.0 0.0 0.0
EMISFACT L0000734     HROFDY 0.0 1.0 1.0 1.0 1.0 1.0
EMISFACT L0000734     HROFDY 1.0 1.0 1.0 1.0 1.0 1.0
EMISFACT L0000734     HROFDY 1.0 0.0 0.0 0.0 0.0 0.0
EMISFACT L0000735     HROFDY 0.0 0.0 0.0 0.0 0.0 0.0
EMISFACT L0000735     HROFDY 0.0 1.0 1.0 1.0 1.0 1.0
EMISFACT L0000735     HROFDY 1.0 1.0 1.0 1.0 1.0 1.0
EMISFACT L0000735     HROFDY 1.0 0.0 0.0 0.0 0.0 0.0
EMISFACT L0000736     HROFDY 0.0 0.0 0.0 0.0 0.0 0.0
EMISFACT L0000736     HROFDY 0.0 1.0 1.0 1.0 1.0 1.0
EMISFACT L0000736     HROFDY 1.0 1.0 1.0 1.0 1.0 1.0
EMISFACT L0000736     HROFDY 1.0 0.0 0.0 0.0 0.0 0.0
EMISFACT L0000737     HROFDY 0.0 0.0 0.0 0.0 0.0 0.0
EMISFACT L0000737     HROFDY 0.0 1.0 1.0 1.0 1.0 1.0
EMISFACT L0000737     HROFDY 1.0 1.0 1.0 1.0 1.0 1.0
EMISFACT L0000737     HROFDY 1.0 0.0 0.0 0.0 0.0 0.0
EMISFACT L0000738     HROFDY 0.0 0.0 0.0 0.0 0.0 0.0
EMISFACT L0000738     HROFDY 0.0 1.0 1.0 1.0 1.0 1.0
EMISFACT L0000738     HROFDY 1.0 1.0 1.0 1.0 1.0 1.0
EMISFACT L0000738     HROFDY 1.0 0.0 0.0 0.0 0.0 0.0
EMISFACT L0000739     HROFDY 0.0 0.0 0.0 0.0 0.0 0.0
EMISFACT L0000739     HROFDY 0.0 1.0 1.0 1.0 1.0 1.0
EMISFACT L0000739     HROFDY 1.0 1.0 1.0 1.0 1.0 1.0
EMISFACT L0000739     HROFDY 1.0 0.0 0.0 0.0 0.0 0.0
EMISFACT L0000740     HROFDY 0.0 0.0 0.0 0.0 0.0 0.0
EMISFACT L0000740     HROFDY 0.0 1.0 1.0 1.0 1.0 1.0
EMISFACT L0000740     HROFDY 1.0 1.0 1.0 1.0 1.0 1.0
EMISFACT L0000740     HROFDY 1.0 0.0 0.0 0.0 0.0 0.0
EMISFACT L0000741     HROFDY 0.0 0.0 0.0 0.0 0.0 0.0
EMISFACT L0000741     HROFDY 0.0 1.0 1.0 1.0 1.0 1.0
EMISFACT L0000741     HROFDY 1.0 1.0 1.0 1.0 1.0 1.0
EMISFACT L0000741     HROFDY 1.0 0.0 0.0 0.0 0.0 0.0
EMISFACT L0000742     HROFDY 0.0 0.0 0.0 0.0 0.0 0.0
EMISFACT L0000742     HROFDY 0.0 1.0 1.0 1.0 1.0 1.0
EMISFACT L0000742     HROFDY 1.0 1.0 1.0 1.0 1.0 1.0
EMISFACT L0000742     HROFDY 1.0 0.0 0.0 0.0 0.0 0.0
EMISFACT L0000743     HROFDY 0.0 0.0 0.0 0.0 0.0 0.0
EMISFACT L0000743     HROFDY 0.0 1.0 1.0 1.0 1.0 1.0
EMISFACT L0000743     HROFDY 1.0 1.0 1.0 1.0 1.0 1.0
EMISFACT L0000743     HROFDY 1.0 0.0 0.0 0.0 0.0 0.0
EMISFACT L0000744     HROFDY 0.0 0.0 0.0 0.0 0.0 0.0
EMISFACT L0000744     HROFDY 0.0 1.0 1.0 1.0 1.0 1.0
EMISFACT L0000744     HROFDY 1.0 1.0 1.0 1.0 1.0 1.0
EMISFACT L0000744     HROFDY 1.0 0.0 0.0 0.0 0.0 0.0
EMISFACT L0000745     HROFDY 0.0 0.0 0.0 0.0 0.0 0.0
EMISFACT L0000745     HROFDY 0.0 1.0 1.0 1.0 1.0 1.0
EMISFACT L0000745     HROFDY 1.0 1.0 1.0 1.0 1.0 1.0
EMISFACT L0000745     HROFDY 1.0 0.0 0.0 0.0 0.0 0.0
EMISFACT L0000746     HROFDY 0.0 0.0 0.0 0.0 0.0 0.0
EMISFACT L0000746     HROFDY 0.0 1.0 1.0 1.0 1.0 1.0
EMISFACT L0000746     HROFDY 1.0 1.0 1.0 1.0 1.0 1.0
EMISFACT L0000746     HROFDY 1.0 0.0 0.0 0.0 0.0 0.0
EMISFACT L0000747     HROFDY 0.0 0.0 0.0 0.0 0.0 0.0
EMISFACT L0000747     HROFDY 0.0 1.0 1.0 1.0 1.0 1.0
EMISFACT L0000747     HROFDY 1.0 1.0 1.0 1.0 1.0 1.0
EMISFACT L0000747     HROFDY 1.0 0.0 0.0 0.0 0.0 0.0
EMISFACT L0000748     HROFDY 0.0 0.0 0.0 0.0 0.0 0.0
EMISFACT L0000748     HROFDY 0.0 1.0 1.0 1.0 1.0 1.0
EMISFACT L0000748     HROFDY 1.0 1.0 1.0 1.0 1.0 1.0
EMISFACT L0000748     HROFDY 1.0 0.0 0.0 0.0 0.0 0.0
EMISFACT L0000749     HROFDY 0.0 0.0 0.0 0.0 0.0 0.0
EMISFACT L0000749     HROFDY 0.0 1.0 1.0 1.0 1.0 1.0
EMISFACT L0000749     HROFDY 1.0 1.0 1.0 1.0 1.0 1.0
EMISFACT L0000749     HROFDY 1.0 0.0 0.0 0.0 0.0 0.0
EMISFACT L0000750     HROFDY 0.0 0.0 0.0 0.0 0.0 0.0
EMISFACT L0000750     HROFDY 0.0 1.0 1.0 1.0 1.0 1.0
EMISFACT L0000750     HROFDY 1.0 1.0 1.0 1.0 1.0 1.0
EMISFACT L0000750     HROFDY 1.0 0.0 0.0 0.0 0.0 0.0
EMISFACT L0000751     HROFDY 0.0 0.0 0.0 0.0 0.0 0.0
EMISFACT L0000751     HROFDY 0.0 1.0 1.0 1.0 1.0 1.0
EMISFACT L0000751     HROFDY 1.0 1.0 1.0 1.0 1.0 1.0
EMISFACT L0000751     HROFDY 1.0 0.0 0.0 0.0 0.0 0.0
EMISFACT L0000752     HROFDY 0.0 0.0 0.0 0.0 0.0 0.0
EMISFACT L0000752     HROFDY 0.0 1.0 1.0 1.0 1.0 1.0
EMISFACT L0000752     HROFDY 1.0 1.0 1.0 1.0 1.0 1.0
EMISFACT L0000752     HROFDY 1.0 0.0 0.0 0.0 0.0 0.0
```

```
EMISFACT L0000753     HROFDY 0.0 0.0 0.0 0.0 0.0 0.0
EMISFACT L0000753     HROFDY 0.0 1.0 1.0 1.0 1.0 1.0
EMISFACT L0000753     HROFDY 1.0 1.0 1.0 1.0 1.0 1.0
EMISFACT L0000753     HROFDY 1.0 0.0 0.0 0.0 0.0 0.0
EMISFACT L0000754     HROFDY 0.0 0.0 0.0 0.0 0.0 0.0
EMISFACT L0000754     HROFDY 0.0 1.0 1.0 1.0 1.0 1.0
EMISFACT L0000754     HROFDY 1.0 1.0 1.0 1.0 1.0 1.0
EMISFACT L0000754     HROFDY 1.0 0.0 0.0 0.0 0.0 0.0
EMISFACT L0000755     HROFDY 0.0 0.0 0.0 0.0 0.0 0.0
EMISFACT L0000755     HROFDY 0.0 1.0 1.0 1.0 1.0 1.0
EMISFACT L0000755     HROFDY 1.0 1.0 1.0 1.0 1.0 1.0
EMISFACT L0000755     HROFDY 1.0 0.0 0.0 0.0 0.0 0.0
EMISFACT L0000756     HROFDY 0.0 0.0 0.0 0.0 0.0 0.0
EMISFACT L0000756     HROFDY 0.0 1.0 1.0 1.0 1.0 1.0
EMISFACT L0000756     HROFDY 1.0 1.0 1.0 1.0 1.0 1.0
EMISFACT L0000756     HROFDY 1.0 0.0 0.0 0.0 0.0 0.0
EMISFACT L0000757     HROFDY 0.0 0.0 0.0 0.0 0.0 0.0
EMISFACT L0000757     HROFDY 0.0 1.0 1.0 1.0 1.0 1.0
EMISFACT L0000757     HROFDY 1.0 1.0 1.0 1.0 1.0 1.0
EMISFACT L0000757     HROFDY 1.0 0.0 0.0 0.0 0.0 0.0
EMISFACT L0000758     HROFDY 0.0 0.0 0.0 0.0 0.0 0.0
EMISFACT L0000758     HROFDY 0.0 1.0 1.0 1.0 1.0 1.0
EMISFACT L0000758     HROFDY 1.0 1.0 1.0 1.0 1.0 1.0
EMISFACT L0000758     HROFDY 1.0 0.0 0.0 0.0 0.0 0.0
EMISFACT L0000759     HROFDY 0.0 0.0 0.0 0.0 0.0 0.0
EMISFACT L0000759     HROFDY 0.0 1.0 1.0 1.0 1.0 1.0
EMISFACT L0000759     HROFDY 1.0 1.0 1.0 1.0 1.0 1.0
EMISFACT L0000759     HROFDY 1.0 0.0 0.0 0.0 0.0 0.0
EMISFACT L0000760     HROFDY 0.0 0.0 0.0 0.0 0.0 0.0
EMISFACT L0000760     HROFDY 0.0 1.0 1.0 1.0 1.0 1.0
EMISFACT L0000760     HROFDY 1.0 1.0 1.0 1.0 1.0 1.0
EMISFACT L0000760     HROFDY 1.0 0.0 0.0 0.0 0.0 0.0
EMISFACT L0000761     HROFDY 0.0 0.0 0.0 0.0 0.0 0.0
EMISFACT L0000761     HROFDY 0.0 1.0 1.0 1.0 1.0 1.0
EMISFACT L0000761     HROFDY 1.0 1.0 1.0 1.0 1.0 1.0
EMISFACT L0000761     HROFDY 1.0 0.0 0.0 0.0 0.0 0.0
EMISFACT L0000762     HROFDY 0.0 0.0 0.0 0.0 0.0 0.0
EMISFACT L0000762     HROFDY 0.0 1.0 1.0 1.0 1.0 1.0
EMISFACT L0000762     HROFDY 1.0 1.0 1.0 1.0 1.0 1.0
EMISFACT L0000762     HROFDY 1.0 0.0 0.0 0.0 0.0 0.0
EMISFACT L0000763     HROFDY 0.0 0.0 0.0 0.0 0.0 0.0
EMISFACT L0000763     HROFDY 0.0 1.0 1.0 1.0 1.0 1.0
EMISFACT L0000763     HROFDY 1.0 1.0 1.0 1.0 1.0 1.0
EMISFACT L0000763     HROFDY 1.0 0.0 0.0 0.0 0.0 0.0
EMISFACT L0000764     HROFDY 0.0 0.0 0.0 0.0 0.0 0.0
EMISFACT L0000764     HROFDY 0.0 1.0 1.0 1.0 1.0 1.0
EMISFACT L0000764     HROFDY 1.0 1.0 1.0 1.0 1.0 1.0
EMISFACT L0000764     HROFDY 1.0 0.0 0.0 0.0 0.0 0.0
EMISFACT L0000765     HROFDY 0.0 0.0 0.0 0.0 0.0 0.0
EMISFACT L0000765     HROFDY 0.0 1.0 1.0 1.0 1.0 1.0
EMISFACT L0000765     HROFDY 1.0 1.0 1.0 1.0 1.0 1.0
EMISFACT L0000765     HROFDY 1.0 0.0 0.0 0.0 0.0 0.0
EMISFACT L0000766     HROFDY 0.0 0.0 0.0 0.0 0.0 0.0
EMISFACT L0000766     HROFDY 0.0 1.0 1.0 1.0 1.0 1.0
EMISFACT L0000766     HROFDY 1.0 1.0 1.0 1.0 1.0 1.0
EMISFACT L0000766     HROFDY 1.0 0.0 0.0 0.0 0.0 0.0
EMISFACT L0000767     HROFDY 0.0 0.0 0.0 0.0 0.0 0.0
EMISFACT L0000767     HROFDY 0.0 1.0 1.0 1.0 1.0 1.0
EMISFACT L0000767     HROFDY 1.0 1.0 1.0 1.0 1.0 1.0
EMISFACT L0000767     HROFDY 1.0 0.0 0.0 0.0 0.0 0.0
EMISFACT L0000768     HROFDY 0.0 0.0 0.0 0.0 0.0 0.0
EMISFACT L0000768     HROFDY 0.0 1.0 1.0 1.0 1.0 1.0
EMISFACT L0000768     HROFDY 1.0 1.0 1.0 1.0 1.0 1.0
EMISFACT L0000768     HROFDY 1.0 0.0 0.0 0.0 0.0 0.0
EMISFACT L0000769     HROFDY 0.0 0.0 0.0 0.0 0.0 0.0
EMISFACT L0000769     HROFDY 0.0 1.0 1.0 1.0 1.0 1.0
EMISFACT L0000769     HROFDY 1.0 1.0 1.0 1.0 1.0 1.0
EMISFACT L0000769     HROFDY 1.0 0.0 0.0 0.0 0.0 0.0
EMISFACT L0000770     HROFDY 0.0 0.0 0.0 0.0 0.0 0.0
EMISFACT L0000770     HROFDY 0.0 1.0 1.0 1.0 1.0 1.0
EMISFACT L0000770     HROFDY 1.0 1.0 1.0 1.0 1.0 1.0
EMISFACT L0000770     HROFDY 1.0 0.0 0.0 0.0 0.0 0.0
EMISFACT L0000771     HROFDY 0.0 0.0 0.0 0.0 0.0 0.0
EMISFACT L0000771     HROFDY 0.0 1.0 1.0 1.0 1.0 1.0
EMISFACT L0000771     HROFDY 1.0 1.0 1.0 1.0 1.0 1.0
EMISFACT L0000771     HROFDY 1.0 0.0 0.0 0.0 0.0 0.0
```

```
EMISFACT L0000772     HROFDY 0.0 0.0 0.0 0.0 0.0 0.0
EMISFACT L0000772     HROFDY 0.0 1.0 1.0 1.0 1.0 1.0
EMISFACT L0000772     HROFDY 1.0 1.0 1.0 1.0 1.0 1.0
EMISFACT L0000772     HROFDY 1.0 0.0 0.0 0.0 0.0 0.0
EMISFACT L0000773     HROFDY 0.0 0.0 0.0 0.0 0.0 0.0
EMISFACT L0000773     HROFDY 0.0 1.0 1.0 1.0 1.0 1.0
EMISFACT L0000773     HROFDY 1.0 1.0 1.0 1.0 1.0 1.0
EMISFACT L0000773     HROFDY 1.0 0.0 0.0 0.0 0.0 0.0
EMISFACT L0000774     HROFDY 0.0 0.0 0.0 0.0 0.0 0.0
EMISFACT L0000774     HROFDY 0.0 1.0 1.0 1.0 1.0 1.0
EMISFACT L0000774     HROFDY 1.0 1.0 1.0 1.0 1.0 1.0
EMISFACT L0000774     HROFDY 1.0 0.0 0.0 0.0 0.0 0.0
EMISFACT L0000775     HROFDY 0.0 0.0 0.0 0.0 0.0 0.0
EMISFACT L0000775     HROFDY 0.0 1.0 1.0 1.0 1.0 1.0
EMISFACT L0000775     HROFDY 1.0 1.0 1.0 1.0 1.0 1.0
EMISFACT L0000775     HROFDY 1.0 0.0 0.0 0.0 0.0 0.0
EMISFACT L0000776     HROFDY 0.0 0.0 0.0 0.0 0.0 0.0
EMISFACT L0000776     HROFDY 0.0 1.0 1.0 1.0 1.0 1.0
EMISFACT L0000776     HROFDY 1.0 1.0 1.0 1.0 1.0 1.0
EMISFACT L0000776     HROFDY 1.0 0.0 0.0 0.0 0.0 0.0
EMISFACT L0000777     HROFDY 0.0 0.0 0.0 0.0 0.0 0.0
EMISFACT L0000777     HROFDY 0.0 1.0 1.0 1.0 1.0 1.0
EMISFACT L0000777     HROFDY 1.0 1.0 1.0 1.0 1.0 1.0
EMISFACT L0000777     HROFDY 1.0 0.0 0.0 0.0 0.0 0.0
EMISFACT L0000778     HROFDY 0.0 0.0 0.0 0.0 0.0 0.0
EMISFACT L0000778     HROFDY 0.0 1.0 1.0 1.0 1.0 1.0
EMISFACT L0000778     HROFDY 1.0 1.0 1.0 1.0 1.0 1.0
EMISFACT L0000778     HROFDY 1.0 0.0 0.0 0.0 0.0 0.0
EMISFACT L0000779     HROFDY 0.0 0.0 0.0 0.0 0.0 0.0
EMISFACT L0000779     HROFDY 0.0 1.0 1.0 1.0 1.0 1.0
EMISFACT L0000779     HROFDY 1.0 1.0 1.0 1.0 1.0 1.0
EMISFACT L0000779     HROFDY 1.0 0.0 0.0 0.0 0.0 0.0
EMISFACT L0000780     HROFDY 0.0 0.0 0.0 0.0 0.0 0.0
EMISFACT L0000780     HROFDY 0.0 1.0 1.0 1.0 1.0 1.0
EMISFACT L0000780     HROFDY 1.0 1.0 1.0 1.0 1.0 1.0
EMISFACT L0000780     HROFDY 1.0 0.0 0.0 0.0 0.0 0.0
EMISFACT L0000781     HROFDY 0.0 0.0 0.0 0.0 0.0 0.0
EMISFACT L0000781     HROFDY 0.0 1.0 1.0 1.0 1.0 1.0
EMISFACT L0000781     HROFDY 1.0 1.0 1.0 1.0 1.0 1.0
EMISFACT L0000781     HROFDY 1.0 0.0 0.0 0.0 0.0 0.0
EMISFACT L0000782     HROFDY 0.0 0.0 0.0 0.0 0.0 0.0
EMISFACT L0000782     HROFDY 0.0 1.0 1.0 1.0 1.0 1.0
EMISFACT L0000782     HROFDY 1.0 1.0 1.0 1.0 1.0 1.0
EMISFACT L0000782     HROFDY 1.0 0.0 0.0 0.0 0.0 0.0
EMISFACT L0000783     HROFDY 0.0 0.0 0.0 0.0 0.0 0.0
EMISFACT L0000783     HROFDY 0.0 1.0 1.0 1.0 1.0 1.0
EMISFACT L0000783     HROFDY 1.0 1.0 1.0 1.0 1.0 1.0
EMISFACT L0000783     HROFDY 1.0 0.0 0.0 0.0 0.0 0.0
EMISFACT L0000784     HROFDY 0.0 0.0 0.0 0.0 0.0 0.0
EMISFACT L0000784     HROFDY 0.0 1.0 1.0 1.0 1.0 1.0
EMISFACT L0000784     HROFDY 1.0 1.0 1.0 1.0 1.0 1.0
EMISFACT L0000784     HROFDY 1.0 0.0 0.0 0.0 0.0 0.0
EMISFACT L0000785     HROFDY 0.0 0.0 0.0 0.0 0.0 0.0
EMISFACT L0000785     HROFDY 0.0 1.0 1.0 1.0 1.0 1.0
EMISFACT L0000785     HROFDY 1.0 1.0 1.0 1.0 1.0 1.0
EMISFACT L0000785     HROFDY 1.0 0.0 0.0 0.0 0.0 0.0
EMISFACT L0000786     HROFDY 0.0 0.0 0.0 0.0 0.0 0.0
EMISFACT L0000786     HROFDY 0.0 1.0 1.0 1.0 1.0 1.0
EMISFACT L0000786     HROFDY 1.0 1.0 1.0 1.0 1.0 1.0
EMISFACT L0000786     HROFDY 1.0 0.0 0.0 0.0 0.0 0.0
EMISFACT L0000787     HROFDY 0.0 0.0 0.0 0.0 0.0 0.0
EMISFACT L0000787     HROFDY 0.0 1.0 1.0 1.0 1.0 1.0
EMISFACT L0000787     HROFDY 1.0 1.0 1.0 1.0 1.0 1.0
EMISFACT L0000787     HROFDY 1.0 0.0 0.0 0.0 0.0 0.0
EMISFACT L0000788     HROFDY 0.0 0.0 0.0 0.0 0.0 0.0
EMISFACT L0000788     HROFDY 0.0 1.0 1.0 1.0 1.0 1.0
EMISFACT L0000788     HROFDY 1.0 1.0 1.0 1.0 1.0 1.0
EMISFACT L0000788     HROFDY 1.0 0.0 0.0 0.0 0.0 0.0
EMISFACT L0000789     HROFDY 0.0 0.0 0.0 0.0 0.0 0.0
EMISFACT L0000789     HROFDY 0.0 1.0 1.0 1.0 1.0 1.0
EMISFACT L0000789     HROFDY 1.0 1.0 1.0 1.0 1.0 1.0
EMISFACT L0000789     HROFDY 1.0 0.0 0.0 0.0 0.0 0.0
EMISFACT L0000790     HROFDY 0.0 0.0 0.0 0.0 0.0 0.0
EMISFACT L0000790     HROFDY 0.0 1.0 1.0 1.0 1.0 1.0
EMISFACT L0000790     HROFDY 1.0 1.0 1.0 1.0 1.0 1.0
EMISFACT L0000790     HROFDY 1.0 0.0 0.0 0.0 0.0 0.0
```

```
EMISFACT L0000791     HROFDY 0.0 0.0 0.0 0.0 0.0 0.0
EMISFACT L0000791     HROFDY 0.0 1.0 1.0 1.0 1.0 1.0
EMISFACT L0000791     HROFDY 1.0 1.0 1.0 1.0 1.0 1.0
EMISFACT L0000791     HROFDY 1.0 0.0 0.0 0.0 0.0 0.0
EMISFACT L0000792     HROFDY 0.0 0.0 0.0 0.0 0.0 0.0
EMISFACT L0000792     HROFDY 0.0 1.0 1.0 1.0 1.0 1.0
EMISFACT L0000792     HROFDY 1.0 1.0 1.0 1.0 1.0 1.0
EMISFACT L0000792     HROFDY 1.0 0.0 0.0 0.0 0.0 0.0
EMISFACT L0000793     HROFDY 0.0 0.0 0.0 0.0 0.0 0.0
EMISFACT L0000793     HROFDY 0.0 1.0 1.0 1.0 1.0 1.0
EMISFACT L0000793     HROFDY 1.0 1.0 1.0 1.0 1.0 1.0
EMISFACT L0000793     HROFDY 1.0 0.0 0.0 0.0 0.0 0.0
EMISFACT L0000794     HROFDY 0.0 0.0 0.0 0.0 0.0 0.0
EMISFACT L0000794     HROFDY 0.0 1.0 1.0 1.0 1.0 1.0
EMISFACT L0000794     HROFDY 1.0 1.0 1.0 1.0 1.0 1.0
EMISFACT L0000794     HROFDY 1.0 0.0 0.0 0.0 0.0 0.0
EMISFACT L0000795     HROFDY 0.0 0.0 0.0 0.0 0.0 0.0
EMISFACT L0000795     HROFDY 0.0 1.0 1.0 1.0 1.0 1.0
EMISFACT L0000795     HROFDY 1.0 1.0 1.0 1.0 1.0 1.0
EMISFACT L0000795     HROFDY 1.0 0.0 0.0 0.0 0.0 0.0
EMISFACT L0000796     HROFDY 0.0 0.0 0.0 0.0 0.0 0.0
EMISFACT L0000796     HROFDY 0.0 1.0 1.0 1.0 1.0 1.0
EMISFACT L0000796     HROFDY 1.0 1.0 1.0 1.0 1.0 1.0
EMISFACT L0000796     HROFDY 1.0 0.0 0.0 0.0 0.0 0.0
EMISFACT L0000797     HROFDY 0.0 0.0 0.0 0.0 0.0 0.0
EMISFACT L0000797     HROFDY 0.0 1.0 1.0 1.0 1.0 1.0
EMISFACT L0000797     HROFDY 1.0 1.0 1.0 1.0 1.0 1.0
EMISFACT L0000797     HROFDY 1.0 0.0 0.0 0.0 0.0 0.0
EMISFACT L0000798     HROFDY 0.0 0.0 0.0 0.0 0.0 0.0
EMISFACT L0000798     HROFDY 0.0 1.0 1.0 1.0 1.0 1.0
EMISFACT L0000798     HROFDY 1.0 1.0 1.0 1.0 1.0 1.0
EMISFACT L0000798     HROFDY 1.0 0.0 0.0 0.0 0.0 0.0
EMISFACT L0000799     HROFDY 0.0 0.0 0.0 0.0 0.0 0.0
EMISFACT L0000799     HROFDY 0.0 1.0 1.0 1.0 1.0 1.0
EMISFACT L0000799     HROFDY 1.0 1.0 1.0 1.0 1.0 1.0
EMISFACT L0000799     HROFDY 1.0 0.0 0.0 0.0 0.0 0.0
EMISFACT L0000800     HROFDY 0.0 0.0 0.0 0.0 0.0 0.0
EMISFACT L0000800     HROFDY 0.0 1.0 1.0 1.0 1.0 1.0
EMISFACT L0000800     HROFDY 1.0 1.0 1.0 1.0 1.0 1.0
EMISFACT L0000800     HROFDY 1.0 0.0 0.0 0.0 0.0 0.0
EMISFACT L0000801     HROFDY 0.0 0.0 0.0 0.0 0.0 0.0
EMISFACT L0000801     HROFDY 0.0 1.0 1.0 1.0 1.0 1.0
EMISFACT L0000801     HROFDY 1.0 1.0 1.0 1.0 1.0 1.0
EMISFACT L0000801     HROFDY 1.0 0.0 0.0 0.0 0.0 0.0
EMISFACT L0000802     HROFDY 0.0 0.0 0.0 0.0 0.0 0.0
EMISFACT L0000802     HROFDY 0.0 1.0 1.0 1.0 1.0 1.0
EMISFACT L0000802     HROFDY 1.0 1.0 1.0 1.0 1.0 1.0
EMISFACT L0000802     HROFDY 1.0 0.0 0.0 0.0 0.0 0.0
EMISFACT L0000803     HROFDY 0.0 0.0 0.0 0.0 0.0 0.0
EMISFACT L0000803     HROFDY 0.0 1.0 1.0 1.0 1.0 1.0
EMISFACT L0000803     HROFDY 1.0 1.0 1.0 1.0 1.0 1.0
EMISFACT L0000803     HROFDY 1.0 0.0 0.0 0.0 0.0 0.0
EMISFACT L0000804     HROFDY 0.0 0.0 0.0 0.0 0.0 0.0
EMISFACT L0000804     HROFDY 0.0 1.0 1.0 1.0 1.0 1.0
EMISFACT L0000804     HROFDY 1.0 1.0 1.0 1.0 1.0 1.0
EMISFACT L0000804     HROFDY 1.0 0.0 0.0 0.0 0.0 0.0
EMISFACT L0000805     HROFDY 0.0 0.0 0.0 0.0 0.0 0.0
EMISFACT L0000805     HROFDY 0.0 1.0 1.0 1.0 1.0 1.0
EMISFACT L0000805     HROFDY 1.0 1.0 1.0 1.0 1.0 1.0
EMISFACT L0000805     HROFDY 1.0 0.0 0.0 0.0 0.0 0.0
EMISFACT L0000806     HROFDY 0.0 0.0 0.0 0.0 0.0 0.0
EMISFACT L0000806     HROFDY 0.0 1.0 1.0 1.0 1.0 1.0
EMISFACT L0000806     HROFDY 1.0 1.0 1.0 1.0 1.0 1.0
EMISFACT L0000806     HROFDY 1.0 0.0 0.0 0.0 0.0 0.0
EMISFACT L0000807     HROFDY 0.0 0.0 0.0 0.0 0.0 0.0
EMISFACT L0000807     HROFDY 0.0 1.0 1.0 1.0 1.0 1.0
EMISFACT L0000807     HROFDY 1.0 1.0 1.0 1.0 1.0 1.0
EMISFACT L0000807     HROFDY 1.0 0.0 0.0 0.0 0.0 0.0
EMISFACT L0000808     HROFDY 0.0 0.0 0.0 0.0 0.0 0.0
EMISFACT L0000808     HROFDY 0.0 1.0 1.0 1.0 1.0 1.0
EMISFACT L0000808     HROFDY 1.0 1.0 1.0 1.0 1.0 1.0
EMISFACT L0000808     HROFDY 1.0 0.0 0.0 0.0 0.0 0.0
EMISFACT L0000809     HROFDY 0.0 0.0 0.0 0.0 0.0 0.0
EMISFACT L0000809     HROFDY 0.0 1.0 1.0 1.0 1.0 1.0
EMISFACT L0000809     HROFDY 1.0 1.0 1.0 1.0 1.0 1.0
EMISFACT L0000809     HROFDY 1.0 0.0 0.0 0.0 0.0 0.0
```

```
EMISFACT L0000810     HROFDY 0.0 0.0 0.0 0.0 0.0 0.0
EMISFACT L0000810     HROFDY 0.0 1.0 1.0 1.0 1.0 1.0
EMISFACT L0000810     HROFDY 1.0 1.0 1.0 1.0 1.0 1.0
EMISFACT L0000810     HROFDY 1.0 0.0 0.0 0.0 0.0 0.0
EMISFACT L0000811     HROFDY 0.0 0.0 0.0 0.0 0.0 0.0
EMISFACT L0000811     HROFDY 0.0 1.0 1.0 1.0 1.0 1.0
EMISFACT L0000811     HROFDY 1.0 1.0 1.0 1.0 1.0 1.0
EMISFACT L0000811     HROFDY 1.0 0.0 0.0 0.0 0.0 0.0
EMISFACT L0000812     HROFDY 0.0 0.0 0.0 0.0 0.0 0.0
EMISFACT L0000812     HROFDY 0.0 1.0 1.0 1.0 1.0 1.0
EMISFACT L0000812     HROFDY 1.0 1.0 1.0 1.0 1.0 1.0
EMISFACT L0000812     HROFDY 1.0 0.0 0.0 0.0 0.0 0.0
EMISFACT L0000813     HROFDY 0.0 0.0 0.0 0.0 0.0 0.0
EMISFACT L0000813     HROFDY 0.0 1.0 1.0 1.0 1.0 1.0
EMISFACT L0000813     HROFDY 1.0 1.0 1.0 1.0 1.0 1.0
EMISFACT L0000813     HROFDY 1.0 0.0 0.0 0.0 0.0 0.0
EMISFACT L0000814     HROFDY 0.0 0.0 0.0 0.0 0.0 0.0
EMISFACT L0000814     HROFDY 0.0 1.0 1.0 1.0 1.0 1.0
EMISFACT L0000814     HROFDY 1.0 1.0 1.0 1.0 1.0 1.0
EMISFACT L0000814     HROFDY 1.0 0.0 0.0 0.0 0.0 0.0
EMISFACT L0000815     HROFDY 0.0 0.0 0.0 0.0 0.0 0.0
EMISFACT L0000815     HROFDY 0.0 1.0 1.0 1.0 1.0 1.0
EMISFACT L0000815     HROFDY 1.0 1.0 1.0 1.0 1.0 1.0
EMISFACT L0000815     HROFDY 1.0 0.0 0.0 0.0 0.0 0.0
EMISFACT L0000816     HROFDY 0.0 0.0 0.0 0.0 0.0 0.0
EMISFACT L0000816     HROFDY 0.0 1.0 1.0 1.0 1.0 1.0
EMISFACT L0000816     HROFDY 1.0 1.0 1.0 1.0 1.0 1.0
EMISFACT L0000816     HROFDY 1.0 0.0 0.0 0.0 0.0 0.0
EMISFACT L0000817     HROFDY 0.0 0.0 0.0 0.0 0.0 0.0
EMISFACT L0000817     HROFDY 0.0 1.0 1.0 1.0 1.0 1.0
EMISFACT L0000817     HROFDY 1.0 1.0 1.0 1.0 1.0 1.0
EMISFACT L0000817     HROFDY 1.0 0.0 0.0 0.0 0.0 0.0
EMISFACT L0000818     HROFDY 0.0 0.0 0.0 0.0 0.0 0.0
EMISFACT L0000818     HROFDY 0.0 1.0 1.0 1.0 1.0 1.0
EMISFACT L0000818     HROFDY 1.0 1.0 1.0 1.0 1.0 1.0
EMISFACT L0000818     HROFDY 1.0 0.0 0.0 0.0 0.0 0.0
EMISFACT L0000819     HROFDY 0.0 0.0 0.0 0.0 0.0 0.0
EMISFACT L0000819     HROFDY 0.0 1.0 1.0 1.0 1.0 1.0
EMISFACT L0000819     HROFDY 1.0 1.0 1.0 1.0 1.0 1.0
EMISFACT L0000819     HROFDY 1.0 0.0 0.0 0.0 0.0 0.0
EMISFACT L0000820     HROFDY 0.0 0.0 0.0 0.0 0.0 0.0
EMISFACT L0000820     HROFDY 0.0 1.0 1.0 1.0 1.0 1.0
EMISFACT L0000820     HROFDY 1.0 1.0 1.0 1.0 1.0 1.0
EMISFACT L0000820     HROFDY 1.0 0.0 0.0 0.0 0.0 0.0
EMISFACT L0000821     HROFDY 0.0 0.0 0.0 0.0 0.0 0.0
EMISFACT L0000821     HROFDY 0.0 1.0 1.0 1.0 1.0 1.0
EMISFACT L0000821     HROFDY 1.0 1.0 1.0 1.0 1.0 1.0
EMISFACT L0000821     HROFDY 1.0 0.0 0.0 0.0 0.0 0.0
EMISFACT L0000822     HROFDY 0.0 0.0 0.0 0.0 0.0 0.0
EMISFACT L0000822     HROFDY 0.0 1.0 1.0 1.0 1.0 1.0
EMISFACT L0000822     HROFDY 1.0 1.0 1.0 1.0 1.0 1.0
EMISFACT L0000822     HROFDY 1.0 0.0 0.0 0.0 0.0 0.0
EMISFACT L0000823     HROFDY 0.0 0.0 0.0 0.0 0.0 0.0
EMISFACT L0000823     HROFDY 0.0 1.0 1.0 1.0 1.0 1.0
EMISFACT L0000823     HROFDY 1.0 1.0 1.0 1.0 1.0 1.0
EMISFACT L0000823     HROFDY 1.0 0.0 0.0 0.0 0.0 0.0
EMISFACT L0000824     HROFDY 0.0 0.0 0.0 0.0 0.0 0.0
EMISFACT L0000824     HROFDY 0.0 1.0 1.0 1.0 1.0 1.0
EMISFACT L0000824     HROFDY 1.0 1.0 1.0 1.0 1.0 1.0
EMISFACT L0000824     HROFDY 1.0 0.0 0.0 0.0 0.0 0.0
EMISFACT L0000825     HROFDY 0.0 0.0 0.0 0.0 0.0 0.0
EMISFACT L0000825     HROFDY 0.0 1.0 1.0 1.0 1.0 1.0
EMISFACT L0000825     HROFDY 1.0 1.0 1.0 1.0 1.0 1.0
EMISFACT L0000825     HROFDY 1.0 0.0 0.0 0.0 0.0 0.0
EMISFACT L0000826     HROFDY 0.0 0.0 0.0 0.0 0.0 0.0
EMISFACT L0000826     HROFDY 0.0 1.0 1.0 1.0 1.0 1.0
EMISFACT L0000826     HROFDY 1.0 1.0 1.0 1.0 1.0 1.0
EMISFACT L0000826     HROFDY 1.0 0.0 0.0 0.0 0.0 0.0
EMISFACT L0000827     HROFDY 0.0 0.0 0.0 0.0 0.0 0.0
EMISFACT L0000827     HROFDY 0.0 1.0 1.0 1.0 1.0 1.0
EMISFACT L0000827     HROFDY 1.0 1.0 1.0 1.0 1.0 1.0
EMISFACT L0000827     HROFDY 1.0 0.0 0.0 0.0 0.0 0.0
EMISFACT L0000828     HROFDY 0.0 0.0 0.0 0.0 0.0 0.0
EMISFACT L0000828     HROFDY 0.0 1.0 1.0 1.0 1.0 1.0
EMISFACT L0000828     HROFDY 1.0 1.0 1.0 1.0 1.0 1.0
EMISFACT L0000828     HROFDY 1.0 0.0 0.0 0.0 0.0 0.0
```

```
EMISFACT L0000829     HROFDY 0.0 0.0 0.0 0.0 0.0 0.0
EMISFACT L0000829     HROFDY 0.0 1.0 1.0 1.0 1.0 1.0
EMISFACT L0000829     HROFDY 1.0 1.0 1.0 1.0 1.0 1.0
EMISFACT L0000829     HROFDY 1.0 0.0 0.0 0.0 0.0 0.0
EMISFACT L0000830     HROFDY 0.0 0.0 0.0 0.0 0.0 0.0
EMISFACT L0000830     HROFDY 0.0 1.0 1.0 1.0 1.0 1.0
EMISFACT L0000830     HROFDY 1.0 1.0 1.0 1.0 1.0 1.0
EMISFACT L0000830     HROFDY 1.0 0.0 0.0 0.0 0.0 0.0
EMISFACT L0000831     HROFDY 0.0 0.0 0.0 0.0 0.0 0.0
EMISFACT L0000831     HROFDY 0.0 1.0 1.0 1.0 1.0 1.0
EMISFACT L0000831     HROFDY 1.0 1.0 1.0 1.0 1.0 1.0
EMISFACT L0000831     HROFDY 1.0 0.0 0.0 0.0 0.0 0.0
EMISFACT L0000832     HROFDY 0.0 0.0 0.0 0.0 0.0 0.0
EMISFACT L0000832     HROFDY 0.0 1.0 1.0 1.0 1.0 1.0
EMISFACT L0000832     HROFDY 1.0 1.0 1.0 1.0 1.0 1.0
EMISFACT L0000832     HROFDY 1.0 0.0 0.0 0.0 0.0 0.0
EMISFACT L0000833     HROFDY 0.0 0.0 0.0 0.0 0.0 0.0
EMISFACT L0000833     HROFDY 0.0 1.0 1.0 1.0 1.0 1.0
EMISFACT L0000833     HROFDY 1.0 1.0 1.0 1.0 1.0 1.0
EMISFACT L0000833     HROFDY 1.0 0.0 0.0 0.0 0.0 0.0
EMISFACT L0000834     HROFDY 0.0 0.0 0.0 0.0 0.0 0.0
EMISFACT L0000834     HROFDY 0.0 1.0 1.0 1.0 1.0 1.0
EMISFACT L0000834     HROFDY 1.0 1.0 1.0 1.0 1.0 1.0
EMISFACT L0000834     HROFDY 1.0 0.0 0.0 0.0 0.0 0.0
EMISFACT L0000835     HROFDY 0.0 0.0 0.0 0.0 0.0 0.0
EMISFACT L0000835     HROFDY 0.0 1.0 1.0 1.0 1.0 1.0
EMISFACT L0000835     HROFDY 1.0 1.0 1.0 1.0 1.0 1.0
EMISFACT L0000835     HROFDY 1.0 0.0 0.0 0.0 0.0 0.0
EMISFACT L0000836     HROFDY 0.0 0.0 0.0 0.0 0.0 0.0
EMISFACT L0000836     HROFDY 0.0 1.0 1.0 1.0 1.0 1.0
EMISFACT L0000836     HROFDY 1.0 1.0 1.0 1.0 1.0 1.0
EMISFACT L0000836     HROFDY 1.0 0.0 0.0 0.0 0.0 0.0
EMISFACT L0000837     HROFDY 0.0 0.0 0.0 0.0 0.0 0.0
EMISFACT L0000837     HROFDY 0.0 1.0 1.0 1.0 1.0 1.0
EMISFACT L0000837     HROFDY 1.0 1.0 1.0 1.0 1.0 1.0
EMISFACT L0000837     HROFDY 1.0 0.0 0.0 0.0 0.0 0.0
EMISFACT L0000838     HROFDY 0.0 0.0 0.0 0.0 0.0 0.0
EMISFACT L0000838     HROFDY 0.0 1.0 1.0 1.0 1.0 1.0
EMISFACT L0000838     HROFDY 1.0 1.0 1.0 1.0 1.0 1.0
EMISFACT L0000838     HROFDY 1.0 0.0 0.0 0.0 0.0 0.0
EMISFACT L0000839     HROFDY 0.0 0.0 0.0 0.0 0.0 0.0
EMISFACT L0000839     HROFDY 0.0 1.0 1.0 1.0 1.0 1.0
EMISFACT L0000839     HROFDY 1.0 1.0 1.0 1.0 1.0 1.0
EMISFACT L0000839     HROFDY 1.0 0.0 0.0 0.0 0.0 0.0
EMISFACT L0000840     HROFDY 0.0 0.0 0.0 0.0 0.0 0.0
EMISFACT L0000840     HROFDY 0.0 1.0 1.0 1.0 1.0 1.0
EMISFACT L0000840     HROFDY 1.0 1.0 1.0 1.0 1.0 1.0
EMISFACT L0000840     HROFDY 1.0 0.0 0.0 0.0 0.0 0.0
EMISFACT L0000841     HROFDY 0.0 0.0 0.0 0.0 0.0 0.0
EMISFACT L0000841     HROFDY 0.0 1.0 1.0 1.0 1.0 1.0
EMISFACT L0000841     HROFDY 1.0 1.0 1.0 1.0 1.0 1.0
EMISFACT L0000841     HROFDY 1.0 0.0 0.0 0.0 0.0 0.0
EMISFACT L0000842     HROFDY 0.0 0.0 0.0 0.0 0.0 0.0
EMISFACT L0000842     HROFDY 0.0 1.0 1.0 1.0 1.0 1.0
EMISFACT L0000842     HROFDY 1.0 1.0 1.0 1.0 1.0 1.0
EMISFACT L0000842     HROFDY 1.0 0.0 0.0 0.0 0.0 0.0
EMISFACT L0000843     HROFDY 0.0 0.0 0.0 0.0 0.0 0.0
EMISFACT L0000843     HROFDY 0.0 1.0 1.0 1.0 1.0 1.0
EMISFACT L0000843     HROFDY 1.0 1.0 1.0 1.0 1.0 1.0
EMISFACT L0000843     HROFDY 1.0 0.0 0.0 0.0 0.0 0.0
EMISFACT L0000844     HROFDY 0.0 0.0 0.0 0.0 0.0 0.0
EMISFACT L0000844     HROFDY 0.0 1.0 1.0 1.0 1.0 1.0
EMISFACT L0000844     HROFDY 1.0 1.0 1.0 1.0 1.0 1.0
EMISFACT L0000844     HROFDY 1.0 0.0 0.0 0.0 0.0 0.0
EMISFACT L0000845     HROFDY 0.0 0.0 0.0 0.0 0.0 0.0
EMISFACT L0000845     HROFDY 0.0 1.0 1.0 1.0 1.0 1.0
EMISFACT L0000845     HROFDY 1.0 1.0 1.0 1.0 1.0 1.0
EMISFACT L0000845     HROFDY 1.0 0.0 0.0 0.0 0.0 0.0
EMISFACT L0000846     HROFDY 0.0 0.0 0.0 0.0 0.0 0.0
EMISFACT L0000846     HROFDY 0.0 1.0 1.0 1.0 1.0 1.0
EMISFACT L0000846     HROFDY 1.0 1.0 1.0 1.0 1.0 1.0
EMISFACT L0000846     HROFDY 1.0 0.0 0.0 0.0 0.0 0.0
EMISFACT L0000847     HROFDY 0.0 0.0 0.0 0.0 0.0 0.0
EMISFACT L0000847     HROFDY 0.0 1.0 1.0 1.0 1.0 1.0
EMISFACT L0000847     HROFDY 1.0 1.0 1.0 1.0 1.0 1.0
EMISFACT L0000847     HROFDY 1.0 0.0 0.0 0.0 0.0 0.0
```

```
EMISFACT L0000848     HROFDY 0.0 0.0 0.0 0.0 0.0 0.0
EMISFACT L0000848     HROFDY 0.0 1.0 1.0 1.0 1.0 1.0
EMISFACT L0000848     HROFDY 1.0 1.0 1.0 1.0 1.0 1.0
EMISFACT L0000848     HROFDY 1.0 0.0 0.0 0.0 0.0 0.0
EMISFACT L0000849     HROFDY 0.0 0.0 0.0 0.0 0.0 0.0
EMISFACT L0000849     HROFDY 0.0 1.0 1.0 1.0 1.0 1.0
EMISFACT L0000849     HROFDY 1.0 1.0 1.0 1.0 1.0 1.0
EMISFACT L0000849     HROFDY 1.0 0.0 0.0 0.0 0.0 0.0
EMISFACT L0000850     HROFDY 0.0 0.0 0.0 0.0 0.0 0.0
EMISFACT L0000850     HROFDY 0.0 1.0 1.0 1.0 1.0 1.0
EMISFACT L0000850     HROFDY 1.0 1.0 1.0 1.0 1.0 1.0
EMISFACT L0000850     HROFDY 1.0 0.0 0.0 0.0 0.0 0.0
EMISFACT L0000851     HROFDY 0.0 0.0 0.0 0.0 0.0 0.0
EMISFACT L0000851     HROFDY 0.0 1.0 1.0 1.0 1.0 1.0
EMISFACT L0000851     HROFDY 1.0 1.0 1.0 1.0 1.0 1.0
EMISFACT L0000851     HROFDY 1.0 0.0 0.0 0.0 0.0 0.0
EMISFACT L0000852     HROFDY 0.0 0.0 0.0 0.0 0.0 0.0
EMISFACT L0000852     HROFDY 0.0 1.0 1.0 1.0 1.0 1.0
EMISFACT L0000852     HROFDY 1.0 1.0 1.0 1.0 1.0 1.0
EMISFACT L0000852     HROFDY 1.0 0.0 0.0 0.0 0.0 0.0
EMISFACT L0000853     HROFDY 0.0 0.0 0.0 0.0 0.0 0.0
EMISFACT L0000853     HROFDY 0.0 1.0 1.0 1.0 1.0 1.0
EMISFACT L0000853     HROFDY 1.0 1.0 1.0 1.0 1.0 1.0
EMISFACT L0000853     HROFDY 1.0 0.0 0.0 0.0 0.0 0.0
EMISFACT L0000854     HROFDY 0.0 0.0 0.0 0.0 0.0 0.0
EMISFACT L0000854     HROFDY 0.0 1.0 1.0 1.0 1.0 1.0
EMISFACT L0000854     HROFDY 1.0 1.0 1.0 1.0 1.0 1.0
EMISFACT L0000854     HROFDY 1.0 0.0 0.0 0.0 0.0 0.0
EMISFACT L0000855     HROFDY 0.0 0.0 0.0 0.0 0.0 0.0
EMISFACT L0000855     HROFDY 0.0 1.0 1.0 1.0 1.0 1.0
EMISFACT L0000855     HROFDY 1.0 1.0 1.0 1.0 1.0 1.0
EMISFACT L0000855     HROFDY 1.0 0.0 0.0 0.0 0.0 0.0
EMISFACT L0000856     HROFDY 0.0 0.0 0.0 0.0 0.0 0.0
EMISFACT L0000856     HROFDY 0.0 1.0 1.0 1.0 1.0 1.0
EMISFACT L0000856     HROFDY 1.0 1.0 1.0 1.0 1.0 1.0
EMISFACT L0000856     HROFDY 1.0 0.0 0.0 0.0 0.0 0.0
EMISFACT L0000857     HROFDY 0.0 0.0 0.0 0.0 0.0 0.0
EMISFACT L0000857     HROFDY 0.0 1.0 1.0 1.0 1.0 1.0
EMISFACT L0000857     HROFDY 1.0 1.0 1.0 1.0 1.0 1.0
EMISFACT L0000857     HROFDY 1.0 0.0 0.0 0.0 0.0 0.0
EMISFACT L0000858     HROFDY 0.0 0.0 0.0 0.0 0.0 0.0
EMISFACT L0000858     HROFDY 0.0 1.0 1.0 1.0 1.0 1.0
EMISFACT L0000858     HROFDY 1.0 1.0 1.0 1.0 1.0 1.0
EMISFACT L0000858     HROFDY 1.0 0.0 0.0 0.0 0.0 0.0
EMISFACT L0000859     HROFDY 0.0 0.0 0.0 0.0 0.0 0.0
EMISFACT L0000859     HROFDY 0.0 1.0 1.0 1.0 1.0 1.0
EMISFACT L0000859     HROFDY 1.0 1.0 1.0 1.0 1.0 1.0
EMISFACT L0000859     HROFDY 1.0 0.0 0.0 0.0 0.0 0.0
EMISFACT L0000860     HROFDY 0.0 0.0 0.0 0.0 0.0 0.0
EMISFACT L0000860     HROFDY 0.0 1.0 1.0 1.0 1.0 1.0
EMISFACT L0000860     HROFDY 1.0 1.0 1.0 1.0 1.0 1.0
EMISFACT L0000860     HROFDY 1.0 0.0 0.0 0.0 0.0 0.0
EMISFACT L0000861     HROFDY 0.0 0.0 0.0 0.0 0.0 0.0
EMISFACT L0000861     HROFDY 0.0 1.0 1.0 1.0 1.0 1.0
EMISFACT L0000861     HROFDY 1.0 1.0 1.0 1.0 1.0 1.0
EMISFACT L0000861     HROFDY 1.0 0.0 0.0 0.0 0.0 0.0
EMISFACT L0000862     HROFDY 0.0 0.0 0.0 0.0 0.0 0.0
EMISFACT L0000862     HROFDY 0.0 1.0 1.0 1.0 1.0 1.0
EMISFACT L0000862     HROFDY 1.0 1.0 1.0 1.0 1.0 1.0
EMISFACT L0000862     HROFDY 1.0 0.0 0.0 0.0 0.0 0.0
EMISFACT L0000863     HROFDY 0.0 0.0 0.0 0.0 0.0 0.0
EMISFACT L0000863     HROFDY 0.0 1.0 1.0 1.0 1.0 1.0
EMISFACT L0000863     HROFDY 1.0 1.0 1.0 1.0 1.0 1.0
EMISFACT L0000863     HROFDY 1.0 0.0 0.0 0.0 0.0 0.0
EMISFACT L0000864     HROFDY 0.0 0.0 0.0 0.0 0.0 0.0
EMISFACT L0000864     HROFDY 0.0 1.0 1.0 1.0 1.0 1.0
EMISFACT L0000864     HROFDY 1.0 1.0 1.0 1.0 1.0 1.0
EMISFACT L0000864     HROFDY 1.0 0.0 0.0 0.0 0.0 0.0
EMISFACT L0000865     HROFDY 0.0 0.0 0.0 0.0 0.0 0.0
EMISFACT L0000865     HROFDY 0.0 1.0 1.0 1.0 1.0 1.0
EMISFACT L0000865     HROFDY 1.0 1.0 1.0 1.0 1.0 1.0
EMISFACT L0000865     HROFDY 1.0 0.0 0.0 0.0 0.0 0.0
EMISFACT L0000866     HROFDY 0.0 0.0 0.0 0.0 0.0 0.0
EMISFACT L0000866     HROFDY 0.0 1.0 1.0 1.0 1.0 1.0
EMISFACT L0000866     HROFDY 1.0 1.0 1.0 1.0 1.0 1.0
EMISFACT L0000866     HROFDY 1.0 0.0 0.0 0.0 0.0 0.0
```

```
EMISFACT L0000867     HROFDY 0.0 0.0 0.0 0.0 0.0 0.0
EMISFACT L0000867     HROFDY 0.0 1.0 1.0 1.0 1.0 1.0
EMISFACT L0000867     HROFDY 1.0 1.0 1.0 1.0 1.0 1.0
EMISFACT L0000867     HROFDY 1.0 0.0 0.0 0.0 0.0 0.0
EMISFACT L0000868     HROFDY 0.0 0.0 0.0 0.0 0.0 0.0
EMISFACT L0000868     HROFDY 0.0 1.0 1.0 1.0 1.0 1.0
EMISFACT L0000868     HROFDY 1.0 1.0 1.0 1.0 1.0 1.0
EMISFACT L0000868     HROFDY 1.0 0.0 0.0 0.0 0.0 0.0
EMISFACT L0000869     HROFDY 0.0 0.0 0.0 0.0 0.0 0.0
EMISFACT L0000869     HROFDY 0.0 1.0 1.0 1.0 1.0 1.0
EMISFACT L0000869     HROFDY 1.0 1.0 1.0 1.0 1.0 1.0
EMISFACT L0000869     HROFDY 1.0 0.0 0.0 0.0 0.0 0.0
EMISFACT L0000870     HROFDY 0.0 0.0 0.0 0.0 0.0 0.0
EMISFACT L0000870     HROFDY 0.0 1.0 1.0 1.0 1.0 1.0
EMISFACT L0000870     HROFDY 1.0 1.0 1.0 1.0 1.0 1.0
EMISFACT L0000870     HROFDY 1.0 0.0 0.0 0.0 0.0 0.0
EMISFACT L0000871     HROFDY 0.0 0.0 0.0 0.0 0.0 0.0
EMISFACT L0000871     HROFDY 0.0 1.0 1.0 1.0 1.0 1.0
EMISFACT L0000871     HROFDY 1.0 1.0 1.0 1.0 1.0 1.0
EMISFACT L0000871     HROFDY 1.0 0.0 0.0 0.0 0.0 0.0
EMISFACT L0000872     HROFDY 0.0 0.0 0.0 0.0 0.0 0.0
EMISFACT L0000872     HROFDY 0.0 1.0 1.0 1.0 1.0 1.0
EMISFACT L0000872     HROFDY 1.0 1.0 1.0 1.0 1.0 1.0
EMISFACT L0000872     HROFDY 1.0 0.0 0.0 0.0 0.0 0.0
EMISFACT L0000873     HROFDY 0.0 0.0 0.0 0.0 0.0 0.0
EMISFACT L0000873     HROFDY 0.0 1.0 1.0 1.0 1.0 1.0
EMISFACT L0000873     HROFDY 1.0 1.0 1.0 1.0 1.0 1.0
EMISFACT L0000873     HROFDY 1.0 0.0 0.0 0.0 0.0 0.0
EMISFACT L0000874     HROFDY 0.0 0.0 0.0 0.0 0.0 0.0
EMISFACT L0000874     HROFDY 0.0 1.0 1.0 1.0 1.0 1.0
EMISFACT L0000874     HROFDY 1.0 1.0 1.0 1.0 1.0 1.0
EMISFACT L0000874     HROFDY 1.0 0.0 0.0 0.0 0.0 0.0
EMISFACT L0000875     HROFDY 0.0 0.0 0.0 0.0 0.0 0.0
EMISFACT L0000875     HROFDY 0.0 1.0 1.0 1.0 1.0 1.0
EMISFACT L0000875     HROFDY 1.0 1.0 1.0 1.0 1.0 1.0
EMISFACT L0000875     HROFDY 1.0 0.0 0.0 0.0 0.0 0.0
EMISFACT L0000876     HROFDY 0.0 0.0 0.0 0.0 0.0 0.0
EMISFACT L0000876     HROFDY 0.0 1.0 1.0 1.0 1.0 1.0
EMISFACT L0000876     HROFDY 1.0 1.0 1.0 1.0 1.0 1.0
EMISFACT L0000876     HROFDY 1.0 0.0 0.0 0.0 0.0 0.0
EMISFACT L0000877     HROFDY 0.0 0.0 0.0 0.0 0.0 0.0
EMISFACT L0000877     HROFDY 0.0 1.0 1.0 1.0 1.0 1.0
EMISFACT L0000877     HROFDY 1.0 1.0 1.0 1.0 1.0 1.0
EMISFACT L0000877     HROFDY 1.0 0.0 0.0 0.0 0.0 0.0
EMISFACT L0000878     HROFDY 0.0 0.0 0.0 0.0 0.0 0.0
EMISFACT L0000878     HROFDY 0.0 1.0 1.0 1.0 1.0 1.0
EMISFACT L0000878     HROFDY 1.0 1.0 1.0 1.0 1.0 1.0
EMISFACT L0000878     HROFDY 1.0 0.0 0.0 0.0 0.0 0.0
EMISFACT L0000879     HROFDY 0.0 0.0 0.0 0.0 0.0 0.0
EMISFACT L0000879     HROFDY 0.0 1.0 1.0 1.0 1.0 1.0
EMISFACT L0000879     HROFDY 1.0 1.0 1.0 1.0 1.0 1.0
EMISFACT L0000879     HROFDY 1.0 0.0 0.0 0.0 0.0 0.0
EMISFACT L0000880     HROFDY 0.0 0.0 0.0 0.0 0.0 0.0
EMISFACT L0000880     HROFDY 0.0 1.0 1.0 1.0 1.0 1.0
EMISFACT L0000880     HROFDY 1.0 1.0 1.0 1.0 1.0 1.0
EMISFACT L0000880     HROFDY 1.0 0.0 0.0 0.0 0.0 0.0
EMISFACT L0000881     HROFDY 0.0 0.0 0.0 0.0 0.0 0.0
EMISFACT L0000881     HROFDY 0.0 1.0 1.0 1.0 1.0 1.0
EMISFACT L0000881     HROFDY 1.0 1.0 1.0 1.0 1.0 1.0
EMISFACT L0000881     HROFDY 1.0 0.0 0.0 0.0 0.0 0.0
EMISFACT L0000882     HROFDY 0.0 0.0 0.0 0.0 0.0 0.0
EMISFACT L0000882     HROFDY 0.0 1.0 1.0 1.0 1.0 1.0
EMISFACT L0000882     HROFDY 1.0 1.0 1.0 1.0 1.0 1.0
EMISFACT L0000882     HROFDY 1.0 0.0 0.0 0.0 0.0 0.0
EMISFACT L0000883     HROFDY 0.0 0.0 0.0 0.0 0.0 0.0
EMISFACT L0000883     HROFDY 0.0 1.0 1.0 1.0 1.0 1.0
EMISFACT L0000883     HROFDY 1.0 1.0 1.0 1.0 1.0 1.0
EMISFACT L0000883     HROFDY 1.0 0.0 0.0 0.0 0.0 0.0
EMISFACT L0000884     HROFDY 0.0 0.0 0.0 0.0 0.0 0.0
EMISFACT L0000884     HROFDY 0.0 1.0 1.0 1.0 1.0 1.0
EMISFACT L0000884     HROFDY 1.0 1.0 1.0 1.0 1.0 1.0
EMISFACT L0000884     HROFDY 1.0 0.0 0.0 0.0 0.0 0.0
EMISFACT L0000885     HROFDY 0.0 0.0 0.0 0.0 0.0 0.0
EMISFACT L0000885     HROFDY 0.0 1.0 1.0 1.0 1.0 1.0
EMISFACT L0000885     HROFDY 1.0 1.0 1.0 1.0 1.0 1.0
EMISFACT L0000885     HROFDY 1.0 0.0 0.0 0.0 0.0 0.0
```

```
EMISFACT L0000886     HROFDY 0.0 0.0 0.0 0.0 0.0 0.0
EMISFACT L0000886     HROFDY 0.0 1.0 1.0 1.0 1.0 1.0
EMISFACT L0000886     HROFDY 1.0 1.0 1.0 1.0 1.0 1.0
EMISFACT L0000886     HROFDY 1.0 0.0 0.0 0.0 0.0 0.0
EMISFACT L0000887     HROFDY 0.0 0.0 0.0 0.0 0.0 0.0
EMISFACT L0000887     HROFDY 0.0 1.0 1.0 1.0 1.0 1.0
EMISFACT L0000887     HROFDY 1.0 1.0 1.0 1.0 1.0 1.0
EMISFACT L0000887     HROFDY 1.0 0.0 0.0 0.0 0.0 0.0
EMISFACT L0000888     HROFDY 0.0 0.0 0.0 0.0 0.0 0.0
EMISFACT L0000888     HROFDY 0.0 1.0 1.0 1.0 1.0 1.0
EMISFACT L0000888     HROFDY 1.0 1.0 1.0 1.0 1.0 1.0
EMISFACT L0000888     HROFDY 1.0 0.0 0.0 0.0 0.0 0.0
EMISFACT L0000889     HROFDY 0.0 0.0 0.0 0.0 0.0 0.0
EMISFACT L0000889     HROFDY 0.0 1.0 1.0 1.0 1.0 1.0
EMISFACT L0000889     HROFDY 1.0 1.0 1.0 1.0 1.0 1.0
EMISFACT L0000889     HROFDY 1.0 0.0 0.0 0.0 0.0 0.0
EMISFACT L0000890     HROFDY 0.0 0.0 0.0 0.0 0.0 0.0
EMISFACT L0000890     HROFDY 0.0 1.0 1.0 1.0 1.0 1.0
EMISFACT L0000890     HROFDY 1.0 1.0 1.0 1.0 1.0 1.0
EMISFACT L0000890     HROFDY 1.0 0.0 0.0 0.0 0.0 0.0
EMISFACT L0000891     HROFDY 0.0 0.0 0.0 0.0 0.0 0.0
EMISFACT L0000891     HROFDY 0.0 1.0 1.0 1.0 1.0 1.0
EMISFACT L0000891     HROFDY 1.0 1.0 1.0 1.0 1.0 1.0
EMISFACT L0000891     HROFDY 1.0 0.0 0.0 0.0 0.0 0.0
EMISFACT L0000892     HROFDY 0.0 0.0 0.0 0.0 0.0 0.0
EMISFACT L0000892     HROFDY 0.0 1.0 1.0 1.0 1.0 1.0
EMISFACT L0000892     HROFDY 1.0 1.0 1.0 1.0 1.0 1.0
EMISFACT L0000892     HROFDY 1.0 0.0 0.0 0.0 0.0 0.0
EMISFACT L0000893     HROFDY 0.0 0.0 0.0 0.0 0.0 0.0
EMISFACT L0000893     HROFDY 0.0 1.0 1.0 1.0 1.0 1.0
EMISFACT L0000893     HROFDY 1.0 1.0 1.0 1.0 1.0 1.0
EMISFACT L0000893     HROFDY 1.0 0.0 0.0 0.0 0.0 0.0
EMISFACT L0000894     HROFDY 0.0 0.0 0.0 0.0 0.0 0.0
EMISFACT L0000894     HROFDY 0.0 1.0 1.0 1.0 1.0 1.0
EMISFACT L0000894     HROFDY 1.0 1.0 1.0 1.0 1.0 1.0
EMISFACT L0000894     HROFDY 1.0 0.0 0.0 0.0 0.0 0.0
EMISFACT L0000895     HROFDY 0.0 0.0 0.0 0.0 0.0 0.0
EMISFACT L0000895     HROFDY 0.0 1.0 1.0 1.0 1.0 1.0
EMISFACT L0000895     HROFDY 1.0 1.0 1.0 1.0 1.0 1.0
EMISFACT L0000895     HROFDY 1.0 0.0 0.0 0.0 0.0 0.0
EMISFACT L0000896     HROFDY 0.0 0.0 0.0 0.0 0.0 0.0
EMISFACT L0000896     HROFDY 0.0 1.0 1.0 1.0 1.0 1.0
EMISFACT L0000896     HROFDY 1.0 1.0 1.0 1.0 1.0 1.0
EMISFACT L0000896     HROFDY 1.0 0.0 0.0 0.0 0.0 0.0
EMISFACT L0000897     HROFDY 0.0 0.0 0.0 0.0 0.0 0.0
EMISFACT L0000897     HROFDY 0.0 1.0 1.0 1.0 1.0 1.0
EMISFACT L0000897     HROFDY 1.0 1.0 1.0 1.0 1.0 1.0
EMISFACT L0000897     HROFDY 1.0 0.0 0.0 0.0 0.0 0.0
EMISFACT L0000898     HROFDY 0.0 0.0 0.0 0.0 0.0 0.0
EMISFACT L0000898     HROFDY 0.0 1.0 1.0 1.0 1.0 1.0
EMISFACT L0000898     HROFDY 1.0 1.0 1.0 1.0 1.0 1.0
EMISFACT L0000898     HROFDY 1.0 0.0 0.0 0.0 0.0 0.0
EMISFACT L0000899     HROFDY 0.0 0.0 0.0 0.0 0.0 0.0
EMISFACT L0000899     HROFDY 0.0 1.0 1.0 1.0 1.0 1.0
EMISFACT L0000899     HROFDY 1.0 1.0 1.0 1.0 1.0 1.0
EMISFACT L0000899     HROFDY 1.0 0.0 0.0 0.0 0.0 0.0
EMISFACT L0000900     HROFDY 0.0 0.0 0.0 0.0 0.0 0.0
EMISFACT L0000900     HROFDY 0.0 1.0 1.0 1.0 1.0 1.0
EMISFACT L0000900     HROFDY 1.0 1.0 1.0 1.0 1.0 1.0
EMISFACT L0000900     HROFDY 1.0 0.0 0.0 0.0 0.0 0.0
EMISFACT L0000901     HROFDY 0.0 0.0 0.0 0.0 0.0 0.0
EMISFACT L0000901     HROFDY 0.0 1.0 1.0 1.0 1.0 1.0
EMISFACT L0000901     HROFDY 1.0 1.0 1.0 1.0 1.0 1.0
EMISFACT L0000901     HROFDY 1.0 0.0 0.0 0.0 0.0 0.0
EMISFACT L0000902     HROFDY 0.0 0.0 0.0 0.0 0.0 0.0
EMISFACT L0000902     HROFDY 0.0 1.0 1.0 1.0 1.0 1.0
EMISFACT L0000902     HROFDY 1.0 1.0 1.0 1.0 1.0 1.0
EMISFACT L0000902     HROFDY 1.0 0.0 0.0 0.0 0.0 0.0
EMISFACT L0000903     HROFDY 0.0 0.0 0.0 0.0 0.0 0.0
EMISFACT L0000903     HROFDY 0.0 1.0 1.0 1.0 1.0 1.0
EMISFACT L0000903     HROFDY 1.0 1.0 1.0 1.0 1.0 1.0
EMISFACT L0000903     HROFDY 1.0 0.0 0.0 0.0 0.0 0.0
EMISFACT L0000904     HROFDY 0.0 0.0 0.0 0.0 0.0 0.0
EMISFACT L0000904     HROFDY 0.0 1.0 1.0 1.0 1.0 1.0
EMISFACT L0000904     HROFDY 1.0 1.0 1.0 1.0 1.0 1.0
EMISFACT L0000904     HROFDY 1.0 0.0 0.0 0.0 0.0 0.0
```

```
EMISFACT L0000905     HROFDY 0.0 0.0 0.0 0.0 0.0 0.0
EMISFACT L0000905     HROFDY 0.0 1.0 1.0 1.0 1.0 1.0
EMISFACT L0000905     HROFDY 1.0 1.0 1.0 1.0 1.0 1.0
EMISFACT L0000905     HROFDY 1.0 0.0 0.0 0.0 0.0 0.0
EMISFACT L0000906     HROFDY 0.0 0.0 0.0 0.0 0.0 0.0
EMISFACT L0000906     HROFDY 0.0 1.0 1.0 1.0 1.0 1.0
EMISFACT L0000906     HROFDY 1.0 1.0 1.0 1.0 1.0 1.0
EMISFACT L0000906     HROFDY 1.0 0.0 0.0 0.0 0.0 0.0
EMISFACT L0000907     HROFDY 0.0 0.0 0.0 0.0 0.0 0.0
EMISFACT L0000907     HROFDY 0.0 1.0 1.0 1.0 1.0 1.0
EMISFACT L0000907     HROFDY 1.0 1.0 1.0 1.0 1.0 1.0
EMISFACT L0000907     HROFDY 1.0 0.0 0.0 0.0 0.0 0.0
EMISFACT L0000908     HROFDY 0.0 0.0 0.0 0.0 0.0 0.0
EMISFACT L0000908     HROFDY 0.0 1.0 1.0 1.0 1.0 1.0
EMISFACT L0000908     HROFDY 1.0 1.0 1.0 1.0 1.0 1.0
EMISFACT L0000908     HROFDY 1.0 0.0 0.0 0.0 0.0 0.0
EMISFACT L0000909     HROFDY 0.0 0.0 0.0 0.0 0.0 0.0
EMISFACT L0000909     HROFDY 0.0 1.0 1.0 1.0 1.0 1.0
EMISFACT L0000909     HROFDY 1.0 1.0 1.0 1.0 1.0 1.0
EMISFACT L0000909     HROFDY 1.0 0.0 0.0 0.0 0.0 0.0
EMISFACT L0000910     HROFDY 0.0 0.0 0.0 0.0 0.0 0.0
EMISFACT L0000910     HROFDY 0.0 1.0 1.0 1.0 1.0 1.0
EMISFACT L0000910     HROFDY 1.0 1.0 1.0 1.0 1.0 1.0
EMISFACT L0000910     HROFDY 1.0 0.0 0.0 0.0 0.0 0.0
EMISFACT L0000911     HROFDY 0.0 0.0 0.0 0.0 0.0 0.0
EMISFACT L0000911     HROFDY 0.0 1.0 1.0 1.0 1.0 1.0
EMISFACT L0000911     HROFDY 1.0 1.0 1.0 1.0 1.0 1.0
EMISFACT L0000911     HROFDY 1.0 0.0 0.0 0.0 0.0 0.0
EMISFACT L0000912     HROFDY 0.0 0.0 0.0 0.0 0.0 0.0
EMISFACT L0000912     HROFDY 0.0 1.0 1.0 1.0 1.0 1.0
EMISFACT L0000912     HROFDY 1.0 1.0 1.0 1.0 1.0 1.0
EMISFACT L0000912     HROFDY 1.0 0.0 0.0 0.0 0.0 0.0
EMISFACT L0000913     HROFDY 0.0 0.0 0.0 0.0 0.0 0.0
EMISFACT L0000913     HROFDY 0.0 1.0 1.0 1.0 1.0 1.0
EMISFACT L0000913     HROFDY 1.0 1.0 1.0 1.0 1.0 1.0
EMISFACT L0000913     HROFDY 1.0 0.0 0.0 0.0 0.0 0.0
EMISFACT L0000914     HROFDY 0.0 0.0 0.0 0.0 0.0 0.0
EMISFACT L0000914     HROFDY 0.0 1.0 1.0 1.0 1.0 1.0
EMISFACT L0000914     HROFDY 1.0 1.0 1.0 1.0 1.0 1.0
EMISFACT L0000914     HROFDY 1.0 0.0 0.0 0.0 0.0 0.0
EMISFACT L0000915     HROFDY 0.0 0.0 0.0 0.0 0.0 0.0
EMISFACT L0000915     HROFDY 0.0 1.0 1.0 1.0 1.0 1.0
EMISFACT L0000915     HROFDY 1.0 1.0 1.0 1.0 1.0 1.0
EMISFACT L0000915     HROFDY 1.0 0.0 0.0 0.0 0.0 0.0
EMISFACT L0000916     HROFDY 0.0 0.0 0.0 0.0 0.0 0.0
EMISFACT L0000916     HROFDY 0.0 1.0 1.0 1.0 1.0 1.0
EMISFACT L0000916     HROFDY 1.0 1.0 1.0 1.0 1.0 1.0
EMISFACT L0000916     HROFDY 1.0 0.0 0.0 0.0 0.0 0.0
EMISFACT L0000917     HROFDY 0.0 0.0 0.0 0.0 0.0 0.0
EMISFACT L0000917     HROFDY 0.0 1.0 1.0 1.0 1.0 1.0
EMISFACT L0000917     HROFDY 1.0 1.0 1.0 1.0 1.0 1.0
EMISFACT L0000917     HROFDY 1.0 0.0 0.0 0.0 0.0 0.0
EMISFACT L0000918     HROFDY 0.0 0.0 0.0 0.0 0.0 0.0
EMISFACT L0000918     HROFDY 0.0 1.0 1.0 1.0 1.0 1.0
EMISFACT L0000918     HROFDY 1.0 1.0 1.0 1.0 1.0 1.0
EMISFACT L0000918     HROFDY 1.0 0.0 0.0 0.0 0.0 0.0
EMISFACT L0000919     HROFDY 0.0 0.0 0.0 0.0 0.0 0.0
EMISFACT L0000919     HROFDY 0.0 1.0 1.0 1.0 1.0 1.0
EMISFACT L0000919     HROFDY 1.0 1.0 1.0 1.0 1.0 1.0
EMISFACT L0000919     HROFDY 1.0 0.0 0.0 0.0 0.0 0.0
EMISFACT L0000920     HROFDY 0.0 0.0 0.0 0.0 0.0 0.0
EMISFACT L0000920     HROFDY 0.0 1.0 1.0 1.0 1.0 1.0
EMISFACT L0000920     HROFDY 1.0 1.0 1.0 1.0 1.0 1.0
EMISFACT L0000920     HROFDY 1.0 0.0 0.0 0.0 0.0 0.0
EMISFACT L0000921     HROFDY 0.0 0.0 0.0 0.0 0.0 0.0
EMISFACT L0000921     HROFDY 0.0 1.0 1.0 1.0 1.0 1.0
EMISFACT L0000921     HROFDY 1.0 1.0 1.0 1.0 1.0 1.0
EMISFACT L0000921     HROFDY 1.0 0.0 0.0 0.0 0.0 0.0
EMISFACT L0000922     HROFDY 0.0 0.0 0.0 0.0 0.0 0.0
EMISFACT L0000922     HROFDY 0.0 1.0 1.0 1.0 1.0 1.0
EMISFACT L0000922     HROFDY 1.0 1.0 1.0 1.0 1.0 1.0
EMISFACT L0000922     HROFDY 1.0 0.0 0.0 0.0 0.0 0.0
EMISFACT L0000923     HROFDY 0.0 0.0 0.0 0.0 0.0 0.0
EMISFACT L0000923     HROFDY 0.0 1.0 1.0 1.0 1.0 1.0
EMISFACT L0000923     HROFDY 1.0 1.0 1.0 1.0 1.0 1.0
EMISFACT L0000923     HROFDY 1.0 0.0 0.0 0.0 0.0 0.0
```

```
EMISFACT L0000924     HROFDY 0.0 0.0 0.0 0.0 0.0 0.0
EMISFACT L0000924     HROFDY 0.0 1.0 1.0 1.0 1.0 1.0
EMISFACT L0000924     HROFDY 1.0 1.0 1.0 1.0 1.0 1.0
EMISFACT L0000924     HROFDY 1.0 0.0 0.0 0.0 0.0 0.0
EMISFACT L0000925     HROFDY 0.0 0.0 0.0 0.0 0.0 0.0
EMISFACT L0000925     HROFDY 0.0 1.0 1.0 1.0 1.0 1.0
EMISFACT L0000925     HROFDY 1.0 1.0 1.0 1.0 1.0 1.0
EMISFACT L0000925     HROFDY 1.0 0.0 0.0 0.0 0.0 0.0
EMISFACT L0000926     HROFDY 0.0 0.0 0.0 0.0 0.0 0.0
EMISFACT L0000926     HROFDY 0.0 1.0 1.0 1.0 1.0 1.0
EMISFACT L0000926     HROFDY 1.0 1.0 1.0 1.0 1.0 1.0
EMISFACT L0000926     HROFDY 1.0 0.0 0.0 0.0 0.0 0.0
EMISFACT L0000927     HROFDY 0.0 0.0 0.0 0.0 0.0 0.0
EMISFACT L0000927     HROFDY 0.0 1.0 1.0 1.0 1.0 1.0
EMISFACT L0000927     HROFDY 1.0 1.0 1.0 1.0 1.0 1.0
EMISFACT L0000927     HROFDY 1.0 0.0 0.0 0.0 0.0 0.0
EMISFACT L0000928     HROFDY 0.0 0.0 0.0 0.0 0.0 0.0
EMISFACT L0000928     HROFDY 0.0 1.0 1.0 1.0 1.0 1.0
EMISFACT L0000928     HROFDY 1.0 1.0 1.0 1.0 1.0 1.0
EMISFACT L0000928     HROFDY 1.0 0.0 0.0 0.0 0.0 0.0
EMISFACT L0000929     HROFDY 0.0 0.0 0.0 0.0 0.0 0.0
EMISFACT L0000929     HROFDY 0.0 1.0 1.0 1.0 1.0 1.0
EMISFACT L0000929     HROFDY 1.0 1.0 1.0 1.0 1.0 1.0
EMISFACT L0000929     HROFDY 1.0 0.0 0.0 0.0 0.0 0.0
EMISFACT L0000930     HROFDY 0.0 0.0 0.0 0.0 0.0 0.0
EMISFACT L0000930     HROFDY 0.0 1.0 1.0 1.0 1.0 1.0
EMISFACT L0000930     HROFDY 1.0 1.0 1.0 1.0 1.0 1.0
EMISFACT L0000930     HROFDY 1.0 0.0 0.0 0.0 0.0 0.0
EMISFACT L0000931     HROFDY 0.0 0.0 0.0 0.0 0.0 0.0
EMISFACT L0000931     HROFDY 0.0 1.0 1.0 1.0 1.0 1.0
EMISFACT L0000931     HROFDY 1.0 1.0 1.0 1.0 1.0 1.0
EMISFACT L0000931     HROFDY 1.0 0.0 0.0 0.0 0.0 0.0
EMISFACT L0000932     HROFDY 0.0 0.0 0.0 0.0 0.0 0.0
EMISFACT L0000932     HROFDY 0.0 1.0 1.0 1.0 1.0 1.0
EMISFACT L0000932     HROFDY 1.0 1.0 1.0 1.0 1.0 1.0
EMISFACT L0000932     HROFDY 1.0 0.0 0.0 0.0 0.0 0.0
EMISFACT L0000933     HROFDY 0.0 0.0 0.0 0.0 0.0 0.0
EMISFACT L0000933     HROFDY 0.0 1.0 1.0 1.0 1.0 1.0
EMISFACT L0000933     HROFDY 1.0 1.0 1.0 1.0 1.0 1.0
EMISFACT L0000933     HROFDY 1.0 0.0 0.0 0.0 0.0 0.0
EMISFACT L0000934     HROFDY 0.0 0.0 0.0 0.0 0.0 0.0
EMISFACT L0000934     HROFDY 0.0 1.0 1.0 1.0 1.0 1.0
EMISFACT L0000934     HROFDY 1.0 1.0 1.0 1.0 1.0 1.0
EMISFACT L0000934     HROFDY 1.0 0.0 0.0 0.0 0.0 0.0
EMISFACT L0000935     HROFDY 0.0 0.0 0.0 0.0 0.0 0.0
EMISFACT L0000935     HROFDY 0.0 1.0 1.0 1.0 1.0 1.0
EMISFACT L0000935     HROFDY 1.0 1.0 1.0 1.0 1.0 1.0
EMISFACT L0000935     HROFDY 1.0 0.0 0.0 0.0 0.0 0.0
EMISFACT L0000936     HROFDY 0.0 0.0 0.0 0.0 0.0 0.0
EMISFACT L0000936     HROFDY 0.0 1.0 1.0 1.0 1.0 1.0
EMISFACT L0000936     HROFDY 1.0 1.0 1.0 1.0 1.0 1.0
EMISFACT L0000936     HROFDY 1.0 0.0 0.0 0.0 0.0 0.0
EMISFACT L0000937     HROFDY 0.0 0.0 0.0 0.0 0.0 0.0
EMISFACT L0000937     HROFDY 0.0 1.0 1.0 1.0 1.0 1.0
EMISFACT L0000937     HROFDY 1.0 1.0 1.0 1.0 1.0 1.0
EMISFACT L0000937     HROFDY 1.0 0.0 0.0 0.0 0.0 0.0
EMISFACT L0000938     HROFDY 0.0 0.0 0.0 0.0 0.0 0.0
EMISFACT L0000938     HROFDY 0.0 1.0 1.0 1.0 1.0 1.0
EMISFACT L0000938     HROFDY 1.0 1.0 1.0 1.0 1.0 1.0
EMISFACT L0000938     HROFDY 1.0 0.0 0.0 0.0 0.0 0.0
EMISFACT L0000939     HROFDY 0.0 0.0 0.0 0.0 0.0 0.0
EMISFACT L0000939     HROFDY 0.0 1.0 1.0 1.0 1.0 1.0
EMISFACT L0000939     HROFDY 1.0 1.0 1.0 1.0 1.0 1.0
EMISFACT L0000939     HROFDY 1.0 0.0 0.0 0.0 0.0 0.0
EMISFACT L0000940     HROFDY 0.0 0.0 0.0 0.0 0.0 0.0
EMISFACT L0000940     HROFDY 0.0 1.0 1.0 1.0 1.0 1.0
EMISFACT L0000940     HROFDY 1.0 1.0 1.0 1.0 1.0 1.0
EMISFACT L0000940     HROFDY 1.0 0.0 0.0 0.0 0.0 0.0
EMISFACT L0000941     HROFDY 0.0 0.0 0.0 0.0 0.0 0.0
EMISFACT L0000941     HROFDY 0.0 1.0 1.0 1.0 1.0 1.0
EMISFACT L0000941     HROFDY 1.0 1.0 1.0 1.0 1.0 1.0
EMISFACT L0000941     HROFDY 1.0 0.0 0.0 0.0 0.0 0.0
EMISFACT L0000942     HROFDY 0.0 0.0 0.0 0.0 0.0 0.0
EMISFACT L0000942     HROFDY 0.0 1.0 1.0 1.0 1.0 1.0
EMISFACT L0000942     HROFDY 1.0 1.0 1.0 1.0 1.0 1.0
EMISFACT L0000942     HROFDY 1.0 0.0 0.0 0.0 0.0 0.0
```

```
EMISFACT L0000943     HROFDY 0.0 0.0 0.0 0.0 0.0 0.0
EMISFACT L0000943     HROFDY 0.0 1.0 1.0 1.0 1.0 1.0
EMISFACT L0000943     HROFDY 1.0 1.0 1.0 1.0 1.0 1.0
EMISFACT L0000943     HROFDY 1.0 0.0 0.0 0.0 0.0 0.0
EMISFACT L0000944     HROFDY 0.0 0.0 0.0 0.0 0.0 0.0
EMISFACT L0000944     HROFDY 0.0 1.0 1.0 1.0 1.0 1.0
EMISFACT L0000944     HROFDY 1.0 1.0 1.0 1.0 1.0 1.0
EMISFACT L0000944     HROFDY 1.0 0.0 0.0 0.0 0.0 0.0
EMISFACT L0000945     HROFDY 0.0 0.0 0.0 0.0 0.0 0.0
EMISFACT L0000945     HROFDY 0.0 1.0 1.0 1.0 1.0 1.0
EMISFACT L0000945     HROFDY 1.0 1.0 1.0 1.0 1.0 1.0
EMISFACT L0000945     HROFDY 1.0 0.0 0.0 0.0 0.0 0.0
EMISFACT L0000946     HROFDY 0.0 0.0 0.0 0.0 0.0 0.0
EMISFACT L0000946     HROFDY 0.0 1.0 1.0 1.0 1.0 1.0
EMISFACT L0000946     HROFDY 1.0 1.0 1.0 1.0 1.0 1.0
EMISFACT L0000946     HROFDY 1.0 0.0 0.0 0.0 0.0 0.0
EMISFACT L0000947     HROFDY 0.0 0.0 0.0 0.0 0.0 0.0
EMISFACT L0000947     HROFDY 0.0 1.0 1.0 1.0 1.0 1.0
EMISFACT L0000947     HROFDY 1.0 1.0 1.0 1.0 1.0 1.0
EMISFACT L0000947     HROFDY 1.0 0.0 0.0 0.0 0.0 0.0
EMISFACT L0000948     HROFDY 0.0 0.0 0.0 0.0 0.0 0.0
EMISFACT L0000948     HROFDY 0.0 1.0 1.0 1.0 1.0 1.0
EMISFACT L0000948     HROFDY 1.0 1.0 1.0 1.0 1.0 1.0
EMISFACT L0000948     HROFDY 1.0 0.0 0.0 0.0 0.0 0.0
EMISFACT L0000949     HROFDY 0.0 0.0 0.0 0.0 0.0 0.0
EMISFACT L0000949     HROFDY 0.0 1.0 1.0 1.0 1.0 1.0
EMISFACT L0000949     HROFDY 1.0 1.0 1.0 1.0 1.0 1.0
EMISFACT L0000949     HROFDY 1.0 0.0 0.0 0.0 0.0 0.0
EMISFACT L0000950     HROFDY 0.0 0.0 0.0 0.0 0.0 0.0
EMISFACT L0000950     HROFDY 0.0 1.0 1.0 1.0 1.0 1.0
EMISFACT L0000950     HROFDY 1.0 1.0 1.0 1.0 1.0 1.0
EMISFACT L0000950     HROFDY 1.0 0.0 0.0 0.0 0.0 0.0
EMISFACT L0000951     HROFDY 0.0 0.0 0.0 0.0 0.0 0.0
EMISFACT L0000951     HROFDY 0.0 1.0 1.0 1.0 1.0 1.0
EMISFACT L0000951     HROFDY 1.0 1.0 1.0 1.0 1.0 1.0
EMISFACT L0000951     HROFDY 1.0 0.0 0.0 0.0 0.0 0.0
EMISFACT L0000952     HROFDY 0.0 0.0 0.0 0.0 0.0 0.0
EMISFACT L0000952     HROFDY 0.0 1.0 1.0 1.0 1.0 1.0
EMISFACT L0000952     HROFDY 1.0 1.0 1.0 1.0 1.0 1.0
EMISFACT L0000952     HROFDY 1.0 0.0 0.0 0.0 0.0 0.0
EMISFACT L0000953     HROFDY 0.0 0.0 0.0 0.0 0.0 0.0
EMISFACT L0000953     HROFDY 0.0 1.0 1.0 1.0 1.0 1.0
EMISFACT L0000953     HROFDY 1.0 1.0 1.0 1.0 1.0 1.0
EMISFACT L0000953     HROFDY 1.0 0.0 0.0 0.0 0.0 0.0
EMISFACT L0000954     HROFDY 0.0 0.0 0.0 0.0 0.0 0.0
EMISFACT L0000954     HROFDY 0.0 1.0 1.0 1.0 1.0 1.0
EMISFACT L0000954     HROFDY 1.0 1.0 1.0 1.0 1.0 1.0
EMISFACT L0000954     HROFDY 1.0 0.0 0.0 0.0 0.0 0.0
EMISFACT L0000955     HROFDY 0.0 0.0 0.0 0.0 0.0 0.0
EMISFACT L0000955     HROFDY 0.0 1.0 1.0 1.0 1.0 1.0
EMISFACT L0000955     HROFDY 1.0 1.0 1.0 1.0 1.0 1.0
EMISFACT L0000955     HROFDY 1.0 0.0 0.0 0.0 0.0 0.0
EMISFACT L0000956     HROFDY 0.0 0.0 0.0 0.0 0.0 0.0
EMISFACT L0000956     HROFDY 0.0 1.0 1.0 1.0 1.0 1.0
EMISFACT L0000956     HROFDY 1.0 1.0 1.0 1.0 1.0 1.0
EMISFACT L0000956     HROFDY 1.0 0.0 0.0 0.0 0.0 0.0
EMISFACT L0000957     HROFDY 0.0 0.0 0.0 0.0 0.0 0.0
EMISFACT L0000957     HROFDY 0.0 1.0 1.0 1.0 1.0 1.0
EMISFACT L0000957     HROFDY 1.0 1.0 1.0 1.0 1.0 1.0
EMISFACT L0000957     HROFDY 1.0 0.0 0.0 0.0 0.0 0.0
EMISFACT L0000958     HROFDY 0.0 0.0 0.0 0.0 0.0 0.0
EMISFACT L0000958     HROFDY 0.0 1.0 1.0 1.0 1.0 1.0
EMISFACT L0000958     HROFDY 1.0 1.0 1.0 1.0 1.0 1.0
EMISFACT L0000958     HROFDY 1.0 0.0 0.0 0.0 0.0 0.0
EMISFACT L0000959     HROFDY 0.0 0.0 0.0 0.0 0.0 0.0
EMISFACT L0000959     HROFDY 0.0 1.0 1.0 1.0 1.0 1.0
EMISFACT L0000959     HROFDY 1.0 1.0 1.0 1.0 1.0 1.0
EMISFACT L0000959     HROFDY 1.0 0.0 0.0 0.0 0.0 0.0
EMISFACT L0000960     HROFDY 0.0 0.0 0.0 0.0 0.0 0.0
EMISFACT L0000960     HROFDY 0.0 1.0 1.0 1.0 1.0 1.0
EMISFACT L0000960     HROFDY 1.0 1.0 1.0 1.0 1.0 1.0
EMISFACT L0000960     HROFDY 1.0 0.0 0.0 0.0 0.0 0.0
EMISFACT L0000961     HROFDY 0.0 0.0 0.0 0.0 0.0 0.0
EMISFACT L0000961     HROFDY 0.0 1.0 1.0 1.0 1.0 1.0
EMISFACT L0000961     HROFDY 1.0 1.0 1.0 1.0 1.0 1.0
EMISFACT L0000961     HROFDY 1.0 0.0 0.0 0.0 0.0 0.0
```

```
EMISFACT L0000962     HROFDY 0.0 0.0 0.0 0.0 0.0 0.0
EMISFACT L0000962     HROFDY 0.0 1.0 1.0 1.0 1.0 1.0
EMISFACT L0000962     HROFDY 1.0 1.0 1.0 1.0 1.0 1.0
EMISFACT L0000962     HROFDY 1.0 0.0 0.0 0.0 0.0 0.0
EMISFACT L0000963     HROFDY 0.0 0.0 0.0 0.0 0.0 0.0
EMISFACT L0000963     HROFDY 0.0 1.0 1.0 1.0 1.0 1.0
EMISFACT L0000963     HROFDY 1.0 1.0 1.0 1.0 1.0 1.0
EMISFACT L0000963     HROFDY 1.0 0.0 0.0 0.0 0.0 0.0
EMISFACT L0000964     HROFDY 0.0 0.0 0.0 0.0 0.0 0.0
EMISFACT L0000964     HROFDY 0.0 1.0 1.0 1.0 1.0 1.0
EMISFACT L0000964     HROFDY 1.0 1.0 1.0 1.0 1.0 1.0
EMISFACT L0000964     HROFDY 1.0 0.0 0.0 0.0 0.0 0.0
EMISFACT L0000965     HROFDY 0.0 0.0 0.0 0.0 0.0 0.0
EMISFACT L0000965     HROFDY 0.0 1.0 1.0 1.0 1.0 1.0
EMISFACT L0000965     HROFDY 1.0 1.0 1.0 1.0 1.0 1.0
EMISFACT L0000965     HROFDY 1.0 0.0 0.0 0.0 0.0 0.0
EMISFACT L0000966     HROFDY 0.0 0.0 0.0 0.0 0.0 0.0
EMISFACT L0000966     HROFDY 0.0 1.0 1.0 1.0 1.0 1.0
EMISFACT L0000966     HROFDY 1.0 1.0 1.0 1.0 1.0 1.0
EMISFACT L0000966     HROFDY 1.0 0.0 0.0 0.0 0.0 0.0
EMISFACT L0000967     HROFDY 0.0 0.0 0.0 0.0 0.0 0.0
EMISFACT L0000967     HROFDY 0.0 1.0 1.0 1.0 1.0 1.0
EMISFACT L0000967     HROFDY 1.0 1.0 1.0 1.0 1.0 1.0
EMISFACT L0000967     HROFDY 1.0 0.0 0.0 0.0 0.0 0.0
EMISFACT L0000968     HROFDY 0.0 0.0 0.0 0.0 0.0 0.0
EMISFACT L0000968     HROFDY 0.0 1.0 1.0 1.0 1.0 1.0
EMISFACT L0000968     HROFDY 1.0 1.0 1.0 1.0 1.0 1.0
EMISFACT L0000968     HROFDY 1.0 0.0 0.0 0.0 0.0 0.0
EMISFACT L0000969     HROFDY 0.0 0.0 0.0 0.0 0.0 0.0
EMISFACT L0000969     HROFDY 0.0 1.0 1.0 1.0 1.0 1.0
EMISFACT L0000969     HROFDY 1.0 1.0 1.0 1.0 1.0 1.0
EMISFACT L0000969     HROFDY 1.0 0.0 0.0 0.0 0.0 0.0
EMISFACT L0000970     HROFDY 0.0 0.0 0.0 0.0 0.0 0.0
EMISFACT L0000970     HROFDY 0.0 1.0 1.0 1.0 1.0 1.0
EMISFACT L0000970     HROFDY 1.0 1.0 1.0 1.0 1.0 1.0
EMISFACT L0000970     HROFDY 1.0 0.0 0.0 0.0 0.0 0.0
EMISFACT L0000971     HROFDY 0.0 0.0 0.0 0.0 0.0 0.0
EMISFACT L0000971     HROFDY 0.0 1.0 1.0 1.0 1.0 1.0
EMISFACT L0000971     HROFDY 1.0 1.0 1.0 1.0 1.0 1.0
EMISFACT L0000971     HROFDY 1.0 0.0 0.0 0.0 0.0 0.0
EMISFACT L0000972     HROFDY 0.0 0.0 0.0 0.0 0.0 0.0
EMISFACT L0000972     HROFDY 0.0 1.0 1.0 1.0 1.0 1.0
EMISFACT L0000972     HROFDY 1.0 1.0 1.0 1.0 1.0 1.0
EMISFACT L0000972     HROFDY 1.0 0.0 0.0 0.0 0.0 0.0
EMISFACT L0000973     HROFDY 0.0 0.0 0.0 0.0 0.0 0.0
EMISFACT L0000973     HROFDY 0.0 1.0 1.0 1.0 1.0 1.0
EMISFACT L0000973     HROFDY 1.0 1.0 1.0 1.0 1.0 1.0
EMISFACT L0000973     HROFDY 1.0 0.0 0.0 0.0 0.0 0.0
EMISFACT L0000974     HROFDY 0.0 0.0 0.0 0.0 0.0 0.0
EMISFACT L0000974     HROFDY 0.0 1.0 1.0 1.0 1.0 1.0
EMISFACT L0000974     HROFDY 1.0 1.0 1.0 1.0 1.0 1.0
EMISFACT L0000974     HROFDY 1.0 0.0 0.0 0.0 0.0 0.0
EMISFACT L0000975     HROFDY 0.0 0.0 0.0 0.0 0.0 0.0
EMISFACT L0000975     HROFDY 0.0 1.0 1.0 1.0 1.0 1.0
EMISFACT L0000975     HROFDY 1.0 1.0 1.0 1.0 1.0 1.0
EMISFACT L0000975     HROFDY 1.0 0.0 0.0 0.0 0.0 0.0
EMISFACT L0000976     HROFDY 0.0 0.0 0.0 0.0 0.0 0.0
EMISFACT L0000976     HROFDY 0.0 1.0 1.0 1.0 1.0 1.0
EMISFACT L0000976     HROFDY 1.0 1.0 1.0 1.0 1.0 1.0
EMISFACT L0000976     HROFDY 1.0 0.0 0.0 0.0 0.0 0.0
EMISFACT L0000977     HROFDY 0.0 0.0 0.0 0.0 0.0 0.0
EMISFACT L0000977     HROFDY 0.0 1.0 1.0 1.0 1.0 1.0
EMISFACT L0000977     HROFDY 1.0 1.0 1.0 1.0 1.0 1.0
EMISFACT L0000977     HROFDY 1.0 0.0 0.0 0.0 0.0 0.0
EMISFACT L0000978     HROFDY 0.0 0.0 0.0 0.0 0.0 0.0
EMISFACT L0000978     HROFDY 0.0 1.0 1.0 1.0 1.0 1.0
EMISFACT L0000978     HROFDY 1.0 1.0 1.0 1.0 1.0 1.0
EMISFACT L0000978     HROFDY 1.0 0.0 0.0 0.0 0.0 0.0
EMISFACT L0000979     HROFDY 0.0 0.0 0.0 0.0 0.0 0.0
EMISFACT L0000979     HROFDY 0.0 1.0 1.0 1.0 1.0 1.0
EMISFACT L0000979     HROFDY 1.0 1.0 1.0 1.0 1.0 1.0
EMISFACT L0000979     HROFDY 1.0 0.0 0.0 0.0 0.0 0.0
EMISFACT L0000980     HROFDY 0.0 0.0 0.0 0.0 0.0 0.0
EMISFACT L0000980     HROFDY 0.0 1.0 1.0 1.0 1.0 1.0
EMISFACT L0000980     HROFDY 1.0 1.0 1.0 1.0 1.0 1.0
EMISFACT L0000980     HROFDY 1.0 0.0 0.0 0.0 0.0 0.0
```

```
EMISFACT L0000981     HROFDY 0.0 0.0 0.0 0.0 0.0 0.0
EMISFACT L0000981     HROFDY 0.0 1.0 1.0 1.0 1.0 1.0
EMISFACT L0000981     HROFDY 1.0 1.0 1.0 1.0 1.0 1.0
EMISFACT L0000981     HROFDY 1.0 0.0 0.0 0.0 0.0 0.0
EMISFACT L0000982     HROFDY 0.0 0.0 0.0 0.0 0.0 0.0
EMISFACT L0000982     HROFDY 0.0 1.0 1.0 1.0 1.0 1.0
EMISFACT L0000982     HROFDY 1.0 1.0 1.0 1.0 1.0 1.0
EMISFACT L0000982     HROFDY 1.0 0.0 0.0 0.0 0.0 0.0
EMISFACT L0000983     HROFDY 0.0 0.0 0.0 0.0 0.0 0.0
EMISFACT L0000983     HROFDY 0.0 1.0 1.0 1.0 1.0 1.0
EMISFACT L0000983     HROFDY 1.0 1.0 1.0 1.0 1.0 1.0
EMISFACT L0000983     HROFDY 1.0 0.0 0.0 0.0 0.0 0.0
EMISFACT L0000984     HROFDY 0.0 0.0 0.0 0.0 0.0 0.0
EMISFACT L0000984     HROFDY 0.0 1.0 1.0 1.0 1.0 1.0
EMISFACT L0000984     HROFDY 1.0 1.0 1.0 1.0 1.0 1.0
EMISFACT L0000984     HROFDY 1.0 0.0 0.0 0.0 0.0 0.0
EMISFACT L0000985     HROFDY 0.0 0.0 0.0 0.0 0.0 0.0
EMISFACT L0000985     HROFDY 0.0 1.0 1.0 1.0 1.0 1.0
EMISFACT L0000985     HROFDY 1.0 1.0 1.0 1.0 1.0 1.0
EMISFACT L0000985     HROFDY 1.0 0.0 0.0 0.0 0.0 0.0
EMISFACT L0000986     HROFDY 0.0 0.0 0.0 0.0 0.0 0.0
EMISFACT L0000986     HROFDY 0.0 1.0 1.0 1.0 1.0 1.0
EMISFACT L0000986     HROFDY 1.0 1.0 1.0 1.0 1.0 1.0
EMISFACT L0000986     HROFDY 1.0 0.0 0.0 0.0 0.0 0.0
EMISFACT L0000987     HROFDY 0.0 0.0 0.0 0.0 0.0 0.0
EMISFACT L0000987     HROFDY 0.0 1.0 1.0 1.0 1.0 1.0
EMISFACT L0000987     HROFDY 1.0 1.0 1.0 1.0 1.0 1.0
EMISFACT L0000987     HROFDY 1.0 0.0 0.0 0.0 0.0 0.0
EMISFACT L0000988     HROFDY 0.0 0.0 0.0 0.0 0.0 0.0
EMISFACT L0000988     HROFDY 0.0 1.0 1.0 1.0 1.0 1.0
EMISFACT L0000988     HROFDY 1.0 1.0 1.0 1.0 1.0 1.0
EMISFACT L0000988     HROFDY 1.0 0.0 0.0 0.0 0.0 0.0
EMISFACT L0000989     HROFDY 0.0 0.0 0.0 0.0 0.0 0.0
EMISFACT L0000989     HROFDY 0.0 1.0 1.0 1.0 1.0 1.0
EMISFACT L0000989     HROFDY 1.0 1.0 1.0 1.0 1.0 1.0
EMISFACT L0000989     HROFDY 1.0 0.0 0.0 0.0 0.0 0.0
EMISFACT L0000990     HROFDY 0.0 0.0 0.0 0.0 0.0 0.0
EMISFACT L0000990     HROFDY 0.0 1.0 1.0 1.0 1.0 1.0
EMISFACT L0000990     HROFDY 1.0 1.0 1.0 1.0 1.0 1.0
EMISFACT L0000990     HROFDY 1.0 0.0 0.0 0.0 0.0 0.0
EMISFACT L0000991     HROFDY 0.0 0.0 0.0 0.0 0.0 0.0
EMISFACT L0000991     HROFDY 0.0 1.0 1.0 1.0 1.0 1.0
EMISFACT L0000991     HROFDY 1.0 1.0 1.0 1.0 1.0 1.0
EMISFACT L0000991     HROFDY 1.0 0.0 0.0 0.0 0.0 0.0
EMISFACT L0000992     HROFDY 0.0 0.0 0.0 0.0 0.0 0.0
EMISFACT L0000992     HROFDY 0.0 1.0 1.0 1.0 1.0 1.0
EMISFACT L0000992     HROFDY 1.0 1.0 1.0 1.0 1.0 1.0
EMISFACT L0000992     HROFDY 1.0 0.0 0.0 0.0 0.0 0.0
EMISFACT L0000993     HROFDY 0.0 0.0 0.0 0.0 0.0 0.0
EMISFACT L0000993     HROFDY 0.0 1.0 1.0 1.0 1.0 1.0
EMISFACT L0000993     HROFDY 1.0 1.0 1.0 1.0 1.0 1.0
EMISFACT L0000993     HROFDY 1.0 0.0 0.0 0.0 0.0 0.0
EMISFACT L0000994     HROFDY 0.0 0.0 0.0 0.0 0.0 0.0
EMISFACT L0000994     HROFDY 0.0 1.0 1.0 1.0 1.0 1.0
EMISFACT L0000994     HROFDY 1.0 1.0 1.0 1.0 1.0 1.0
EMISFACT L0000994     HROFDY 1.0 0.0 0.0 0.0 0.0 0.0
EMISFACT L0000995     HROFDY 0.0 0.0 0.0 0.0 0.0 0.0
EMISFACT L0000995     HROFDY 0.0 1.0 1.0 1.0 1.0 1.0
EMISFACT L0000995     HROFDY 1.0 1.0 1.0 1.0 1.0 1.0
EMISFACT L0000995     HROFDY 1.0 0.0 0.0 0.0 0.0 0.0
EMISFACT L0000996     HROFDY 0.0 0.0 0.0 0.0 0.0 0.0
EMISFACT L0000996     HROFDY 0.0 1.0 1.0 1.0 1.0 1.0
EMISFACT L0000996     HROFDY 1.0 1.0 1.0 1.0 1.0 1.0
EMISFACT L0000996     HROFDY 1.0 0.0 0.0 0.0 0.0 0.0
EMISFACT L0000997     HROFDY 0.0 0.0 0.0 0.0 0.0 0.0
EMISFACT L0000997     HROFDY 0.0 1.0 1.0 1.0 1.0 1.0
EMISFACT L0000997     HROFDY 1.0 1.0 1.0 1.0 1.0 1.0
EMISFACT L0000997     HROFDY 1.0 0.0 0.0 0.0 0.0 0.0
EMISFACT L0000998     HROFDY 0.0 0.0 0.0 0.0 0.0 0.0
EMISFACT L0000998     HROFDY 0.0 1.0 1.0 1.0 1.0 1.0
EMISFACT L0000998     HROFDY 1.0 1.0 1.0 1.0 1.0 1.0
EMISFACT L0000998     HROFDY 1.0 0.0 0.0 0.0 0.0 0.0
EMISFACT L0000999     HROFDY 0.0 0.0 0.0 0.0 0.0 0.0
EMISFACT L0000999     HROFDY 0.0 1.0 1.0 1.0 1.0 1.0
EMISFACT L0000999     HROFDY 1.0 1.0 1.0 1.0 1.0 1.0
EMISFACT L0000999     HROFDY 1.0 0.0 0.0 0.0 0.0 0.0
```

```
EMISFACT L0001000     HROFDY 0.0 0.0 0.0 0.0 0.0 0.0
EMISFACT L0001000     HROFDY 0.0 1.0 1.0 1.0 1.0 1.0
EMISFACT L0001000     HROFDY 1.0 1.0 1.0 1.0 1.0 1.0
EMISFACT L0001000     HROFDY 1.0 0.0 0.0 0.0 0.0 0.0
EMISFACT L0001001     HROFDY 0.0 0.0 0.0 0.0 0.0 0.0
EMISFACT L0001001     HROFDY 0.0 1.0 1.0 1.0 1.0 1.0
EMISFACT L0001001     HROFDY 1.0 1.0 1.0 1.0 1.0 1.0
EMISFACT L0001001     HROFDY 1.0 0.0 0.0 0.0 0.0 0.0
EMISFACT L0001002     HROFDY 0.0 0.0 0.0 0.0 0.0 0.0
EMISFACT L0001002     HROFDY 0.0 1.0 1.0 1.0 1.0 1.0
EMISFACT L0001002     HROFDY 1.0 1.0 1.0 1.0 1.0 1.0
EMISFACT L0001002     HROFDY 1.0 0.0 0.0 0.0 0.0 0.0
EMISFACT L0001003     HROFDY 0.0 0.0 0.0 0.0 0.0 0.0
EMISFACT L0001003     HROFDY 0.0 1.0 1.0 1.0 1.0 1.0
EMISFACT L0001003     HROFDY 1.0 1.0 1.0 1.0 1.0 1.0
EMISFACT L0001003     HROFDY 1.0 0.0 0.0 0.0 0.0 0.0
EMISFACT L0001004     HROFDY 0.0 0.0 0.0 0.0 0.0 0.0
EMISFACT L0001004     HROFDY 0.0 1.0 1.0 1.0 1.0 1.0
EMISFACT L0001004     HROFDY 1.0 1.0 1.0 1.0 1.0 1.0
EMISFACT L0001004     HROFDY 1.0 0.0 0.0 0.0 0.0 0.0
EMISFACT L0001005     HROFDY 0.0 0.0 0.0 0.0 0.0 0.0
EMISFACT L0001005     HROFDY 0.0 1.0 1.0 1.0 1.0 1.0
EMISFACT L0001005     HROFDY 1.0 1.0 1.0 1.0 1.0 1.0
EMISFACT L0001005     HROFDY 1.0 0.0 0.0 0.0 0.0 0.0
EMISFACT L0001006     HROFDY 0.0 0.0 0.0 0.0 0.0 0.0
EMISFACT L0001006     HROFDY 0.0 1.0 1.0 1.0 1.0 1.0
EMISFACT L0001006     HROFDY 1.0 1.0 1.0 1.0 1.0 1.0
EMISFACT L0001006     HROFDY 1.0 0.0 0.0 0.0 0.0 0.0
EMISFACT L0001007     HROFDY 0.0 0.0 0.0 0.0 0.0 0.0
EMISFACT L0001007     HROFDY 0.0 1.0 1.0 1.0 1.0 1.0
EMISFACT L0001007     HROFDY 1.0 1.0 1.0 1.0 1.0 1.0
EMISFACT L0001007     HROFDY 1.0 0.0 0.0 0.0 0.0 0.0
EMISFACT L0001008     HROFDY 0.0 0.0 0.0 0.0 0.0 0.0
EMISFACT L0001008     HROFDY 0.0 1.0 1.0 1.0 1.0 1.0
EMISFACT L0001008     HROFDY 1.0 1.0 1.0 1.0 1.0 1.0
EMISFACT L0001008     HROFDY 1.0 0.0 0.0 0.0 0.0 0.0
EMISFACT L0001009     HROFDY 0.0 0.0 0.0 0.0 0.0 0.0
EMISFACT L0001009     HROFDY 0.0 1.0 1.0 1.0 1.0 1.0
EMISFACT L0001009     HROFDY 1.0 1.0 1.0 1.0 1.0 1.0
EMISFACT L0001009     HROFDY 1.0 0.0 0.0 0.0 0.0 0.0
EMISFACT L0001010     HROFDY 0.0 0.0 0.0 0.0 0.0 0.0
EMISFACT L0001010     HROFDY 0.0 1.0 1.0 1.0 1.0 1.0
EMISFACT L0001010     HROFDY 1.0 1.0 1.0 1.0 1.0 1.0
EMISFACT L0001010     HROFDY 1.0 0.0 0.0 0.0 0.0 0.0
EMISFACT L0001011     HROFDY 0.0 0.0 0.0 0.0 0.0 0.0
EMISFACT L0001011     HROFDY 0.0 1.0 1.0 1.0 1.0 1.0
EMISFACT L0001011     HROFDY 1.0 1.0 1.0 1.0 1.0 1.0
EMISFACT L0001011     HROFDY 1.0 0.0 0.0 0.0 0.0 0.0
EMISFACT L0001012     HROFDY 0.0 0.0 0.0 0.0 0.0 0.0
EMISFACT L0001012     HROFDY 0.0 1.0 1.0 1.0 1.0 1.0
EMISFACT L0001012     HROFDY 1.0 1.0 1.0 1.0 1.0 1.0
EMISFACT L0001012     HROFDY 1.0 0.0 0.0 0.0 0.0 0.0
EMISFACT L0001013     HROFDY 0.0 0.0 0.0 0.0 0.0 0.0
EMISFACT L0001013     HROFDY 0.0 1.0 1.0 1.0 1.0 1.0
EMISFACT L0001013     HROFDY 1.0 1.0 1.0 1.0 1.0 1.0
EMISFACT L0001013     HROFDY 1.0 0.0 0.0 0.0 0.0 0.0
EMISFACT L0001014     HROFDY 0.0 0.0 0.0 0.0 0.0 0.0
EMISFACT L0001014     HROFDY 0.0 1.0 1.0 1.0 1.0 1.0
EMISFACT L0001014     HROFDY 1.0 1.0 1.0 1.0 1.0 1.0
EMISFACT L0001014     HROFDY 1.0 0.0 0.0 0.0 0.0 0.0
EMISFACT L0001015     HROFDY 0.0 0.0 0.0 0.0 0.0 0.0
EMISFACT L0001015     HROFDY 0.0 1.0 1.0 1.0 1.0 1.0
EMISFACT L0001015     HROFDY 1.0 1.0 1.0 1.0 1.0 1.0
EMISFACT L0001015     HROFDY 1.0 0.0 0.0 0.0 0.0 0.0
EMISFACT L0001016     HROFDY 0.0 0.0 0.0 0.0 0.0 0.0
EMISFACT L0001016     HROFDY 0.0 1.0 1.0 1.0 1.0 1.0
EMISFACT L0001016     HROFDY 1.0 1.0 1.0 1.0 1.0 1.0
EMISFACT L0001016     HROFDY 1.0 0.0 0.0 0.0 0.0 0.0
EMISFACT L0001017     HROFDY 0.0 0.0 0.0 0.0 0.0 0.0
EMISFACT L0001017     HROFDY 0.0 1.0 1.0 1.0 1.0 1.0
EMISFACT L0001017     HROFDY 1.0 1.0 1.0 1.0 1.0 1.0
EMISFACT L0001017     HROFDY 1.0 0.0 0.0 0.0 0.0 0.0
EMISFACT L0001018     HROFDY 0.0 0.0 0.0 0.0 0.0 0.0
EMISFACT L0001018     HROFDY 0.0 1.0 1.0 1.0 1.0 1.0
EMISFACT L0001018     HROFDY 1.0 1.0 1.0 1.0 1.0 1.0
EMISFACT L0001018     HROFDY 1.0 0.0 0.0 0.0 0.0 0.0
```

```
EMISFACT L0001019     HROFDY 0.0 0.0 0.0 0.0 0.0 0.0
EMISFACT L0001019     HROFDY 0.0 1.0 1.0 1.0 1.0 1.0
EMISFACT L0001019     HROFDY 1.0 1.0 1.0 1.0 1.0 1.0
EMISFACT L0001019     HROFDY 1.0 0.0 0.0 0.0 0.0 0.0
EMISFACT L0001020     HROFDY 0.0 0.0 0.0 0.0 0.0 0.0
EMISFACT L0001020     HROFDY 0.0 1.0 1.0 1.0 1.0 1.0
EMISFACT L0001020     HROFDY 1.0 1.0 1.0 1.0 1.0 1.0
EMISFACT L0001020     HROFDY 1.0 0.0 0.0 0.0 0.0 0.0
EMISFACT L0001021     HROFDY 0.0 0.0 0.0 0.0 0.0 0.0
EMISFACT L0001021     HROFDY 0.0 1.0 1.0 1.0 1.0 1.0
EMISFACT L0001021     HROFDY 1.0 1.0 1.0 1.0 1.0 1.0
EMISFACT L0001021     HROFDY 1.0 0.0 0.0 0.0 0.0 0.0
EMISFACT L0001022     HROFDY 0.0 0.0 0.0 0.0 0.0 0.0
EMISFACT L0001022     HROFDY 0.0 1.0 1.0 1.0 1.0 1.0
EMISFACT L0001022     HROFDY 1.0 1.0 1.0 1.0 1.0 1.0
EMISFACT L0001022     HROFDY 1.0 0.0 0.0 0.0 0.0 0.0
EMISFACT L0001023     HROFDY 0.0 0.0 0.0 0.0 0.0 0.0
EMISFACT L0001023     HROFDY 0.0 1.0 1.0 1.0 1.0 1.0
EMISFACT L0001023     HROFDY 1.0 1.0 1.0 1.0 1.0 1.0
EMISFACT L0001023     HROFDY 1.0 0.0 0.0 0.0 0.0 0.0
EMISFACT L0001024     HROFDY 0.0 0.0 0.0 0.0 0.0 0.0
EMISFACT L0001024     HROFDY 0.0 1.0 1.0 1.0 1.0 1.0
EMISFACT L0001024     HROFDY 1.0 1.0 1.0 1.0 1.0 1.0
EMISFACT L0001024     HROFDY 1.0 0.0 0.0 0.0 0.0 0.0
EMISFACT L0001025     HROFDY 0.0 0.0 0.0 0.0 0.0 0.0
EMISFACT L0001025     HROFDY 0.0 1.0 1.0 1.0 1.0 1.0
EMISFACT L0001025     HROFDY 1.0 1.0 1.0 1.0 1.0 1.0
EMISFACT L0001025     HROFDY 1.0 0.0 0.0 0.0 0.0 0.0
EMISFACT L0001026     HROFDY 0.0 0.0 0.0 0.0 0.0 0.0
EMISFACT L0001026     HROFDY 0.0 1.0 1.0 1.0 1.0 1.0
EMISFACT L0001026     HROFDY 1.0 1.0 1.0 1.0 1.0 1.0
EMISFACT L0001026     HROFDY 1.0 0.0 0.0 0.0 0.0 0.0
EMISFACT L0001027     HROFDY 0.0 0.0 0.0 0.0 0.0 0.0
EMISFACT L0001027     HROFDY 0.0 1.0 1.0 1.0 1.0 1.0
EMISFACT L0001027     HROFDY 1.0 1.0 1.0 1.0 1.0 1.0
EMISFACT L0001027     HROFDY 1.0 0.0 0.0 0.0 0.0 0.0
EMISFACT L0001028     HROFDY 0.0 0.0 0.0 0.0 0.0 0.0
EMISFACT L0001028     HROFDY 0.0 1.0 1.0 1.0 1.0 1.0
EMISFACT L0001028     HROFDY 1.0 1.0 1.0 1.0 1.0 1.0
EMISFACT L0001028     HROFDY 1.0 0.0 0.0 0.0 0.0 0.0
EMISFACT L0001029     HROFDY 0.0 0.0 0.0 0.0 0.0 0.0
EMISFACT L0001029     HROFDY 0.0 1.0 1.0 1.0 1.0 1.0
EMISFACT L0001029     HROFDY 1.0 1.0 1.0 1.0 1.0 1.0
EMISFACT L0001029     HROFDY 1.0 0.0 0.0 0.0 0.0 0.0
EMISFACT L0001030     HROFDY 0.0 0.0 0.0 0.0 0.0 0.0
EMISFACT L0001030     HROFDY 0.0 1.0 1.0 1.0 1.0 1.0
EMISFACT L0001030     HROFDY 1.0 1.0 1.0 1.0 1.0 1.0
EMISFACT L0001030     HROFDY 1.0 0.0 0.0 0.0 0.0 0.0
EMISFACT L0001031     HROFDY 0.0 0.0 0.0 0.0 0.0 0.0
EMISFACT L0001031     HROFDY 0.0 1.0 1.0 1.0 1.0 1.0
EMISFACT L0001031     HROFDY 1.0 1.0 1.0 1.0 1.0 1.0
EMISFACT L0001031     HROFDY 1.0 0.0 0.0 0.0 0.0 0.0
EMISFACT L0001032     HROFDY 0.0 0.0 0.0 0.0 0.0 0.0
EMISFACT L0001032     HROFDY 0.0 1.0 1.0 1.0 1.0 1.0
EMISFACT L0001032     HROFDY 1.0 1.0 1.0 1.0 1.0 1.0
EMISFACT L0001032     HROFDY 1.0 0.0 0.0 0.0 0.0 0.0
EMISFACT L0001033     HROFDY 0.0 0.0 0.0 0.0 0.0 0.0
EMISFACT L0001033     HROFDY 0.0 1.0 1.0 1.0 1.0 1.0
EMISFACT L0001033     HROFDY 1.0 1.0 1.0 1.0 1.0 1.0
EMISFACT L0001033     HROFDY 1.0 0.0 0.0 0.0 0.0 0.0
EMISFACT L0001034     HROFDY 0.0 0.0 0.0 0.0 0.0 0.0
EMISFACT L0001034     HROFDY 0.0 1.0 1.0 1.0 1.0 1.0
EMISFACT L0001034     HROFDY 1.0 1.0 1.0 1.0 1.0 1.0
EMISFACT L0001034     HROFDY 1.0 0.0 0.0 0.0 0.0 0.0
EMISFACT L0001035     HROFDY 0.0 0.0 0.0 0.0 0.0 0.0
EMISFACT L0001035     HROFDY 0.0 1.0 1.0 1.0 1.0 1.0
EMISFACT L0001035     HROFDY 1.0 1.0 1.0 1.0 1.0 1.0
EMISFACT L0001035     HROFDY 1.0 0.0 0.0 0.0 0.0 0.0
EMISFACT L0001036     HROFDY 0.0 0.0 0.0 0.0 0.0 0.0
EMISFACT L0001036     HROFDY 0.0 1.0 1.0 1.0 1.0 1.0
EMISFACT L0001036     HROFDY 1.0 1.0 1.0 1.0 1.0 1.0
EMISFACT L0001036     HROFDY 1.0 0.0 0.0 0.0 0.0 0.0
EMISFACT L0001037     HROFDY 0.0 0.0 0.0 0.0 0.0 0.0
EMISFACT L0001037     HROFDY 0.0 1.0 1.0 1.0 1.0 1.0
EMISFACT L0001037     HROFDY 1.0 1.0 1.0 1.0 1.0 1.0
EMISFACT L0001037     HROFDY 1.0 0.0 0.0 0.0 0.0 0.0
```

```
   EMISFACT L0001038     HROFDY 0.0 0.0 0.0 0.0 0.0 0.0
   EMISFACT L0001038     HROFDY 0.0 1.0 1.0 1.0 1.0 1.0
   EMISFACT L0001038     HROFDY 1.0 1.0 1.0 1.0 1.0 1.0
   EMISFACT L0001038     HROFDY 1.0 0.0 0.0 0.0 0.0 0.0
   EMISFACT L0001039     HROFDY 0.0 0.0 0.0 0.0 0.0 0.0
   EMISFACT L0001039     HROFDY 0.0 1.0 1.0 1.0 1.0 1.0
   EMISFACT L0001039     HROFDY 1.0 1.0 1.0 1.0 1.0 1.0
   EMISFACT L0001039     HROFDY 1.0 0.0 0.0 0.0 0.0 0.0
   EMISFACT L0001040     HROFDY 0.0 0.0 0.0 0.0 0.0 0.0
   EMISFACT L0001040     HROFDY 0.0 1.0 1.0 1.0 1.0 1.0
   EMISFACT L0001040     HROFDY 1.0 1.0 1.0 1.0 1.0 1.0
   EMISFACT L0001040     HROFDY 1.0 0.0 0.0 0.0 0.0 0.0
   EMISFACT L0001041     HROFDY 0.0 0.0 0.0 0.0 0.0 0.0
   EMISFACT L0001041     HROFDY 0.0 1.0 1.0 1.0 1.0 1.0
   EMISFACT L0001041     HROFDY 1.0 1.0 1.0 1.0 1.0 1.0
   EMISFACT L0001041     HROFDY 1.0 0.0 0.0 0.0 0.0 0.0
   EMISFACT L0001042     HROFDY 0.0 0.0 0.0 0.0 0.0 0.0
   EMISFACT L0001042     HROFDY 0.0 1.0 1.0 1.0 1.0 1.0
   EMISFACT L0001042     HROFDY 1.0 1.0 1.0 1.0 1.0 1.0
   EMISFACT L0001042     HROFDY 1.0 0.0 0.0 0.0 0.0 0.0
   EMISFACT L0001043     HROFDY 0.0 0.0 0.0 0.0 0.0 0.0
   EMISFACT L0001043     HROFDY 0.0 1.0 1.0 1.0 1.0 1.0
   EMISFACT L0001043     HROFDY 1.0 1.0 1.0 1.0 1.0 1.0
   EMISFACT L0001043     HROFDY 1.0 0.0 0.0 0.0 0.0 0.0
   EMISFACT L0001044     HROFDY 0.0 0.0 0.0 0.0 0.0 0.0
   EMISFACT L0001044     HROFDY 0.0 1.0 1.0 1.0 1.0 1.0
   EMISFACT L0001044     HROFDY 1.0 1.0 1.0 1.0 1.0 1.0
   EMISFACT L0001044     HROFDY 1.0 0.0 0.0 0.0 0.0 0.0
   EMISFACT L0001045     HROFDY 0.0 0.0 0.0 0.0 0.0 0.0
   EMISFACT L0001045     HROFDY 0.0 1.0 1.0 1.0 1.0 1.0
   EMISFACT L0001045     HROFDY 1.0 1.0 1.0 1.0 1.0 1.0
   EMISFACT L0001045     HROFDY 1.0 0.0 0.0 0.0 0.0 0.0
   SRCGROUP ALL
SO FINISHED
**
****************************************
** AERMOD Receptor Pathway
****************************************
**
**
RE STARTING
   INCLUDED "Pacoima PM10.rou"
RE FINISHED
**
****************************************
** AERMOD Meteorology Pathway
****************************************
**
**
ME STARTING
   SURFFILE ..\burk8.sfc
   PROFFILE ..\burk8.PFL
   SURFDATA 0 2008 Burbank 378.62 3782.24
   UAIRDATA 3190 2008
   SITEDATA 99999 2008
   PROFBASE 175.0 METERS
ME FINISHED
**
****************************************
** AERMOD Output Pathway
****************************************
**
**
OU STARTING
   RECTABLE ALLAVE 1ST
   RECTABLE 1 1ST
** Auto-Generated Plotfiles
   PLOTFILE 1 ALL 1ST "Pacoima PM10.AD\01H1GALL.PLT" 31
   PLOTFILE ANNUAL ALL "Pacoima PM10.AD\AN00GALL.PLT" 32
   SUMMFILE "Pacoima PM10.sum"
OU FINISHED
**
****************************************
** Project Parameters
****************************************
** PROJCTN  CoordinateSystemUTM
```

```
** DESCPTN  UTM: Universal Transverse Mercator
** DATUM    World Geodetic System 1984
** DTMRGN   Global Definition
** UNITS    m
** ZONE     11
** ZONEINX  0
**
```

```
* AERMOD ( 14134): Pacoima Spreading Grounds Improvement Project Diesel PM10                06/03/15
* AERMET ( 14134):                                                                           15:30:24
* MODELING OPTIONS USED:  RegDFAULT CONC      ELEV
*         PLOT FILE OF ANNUAL VALUES FOR SOURCE GROUP: ALL
*         FOR A TOTAL OF   268 RECEPTORS.
*         FORMAT: (3(1X,F13.5),3(1X,F8.2),2X,A6,2X,A8,2X,I8.8,2X,A8)
*        X             Y      AVERAGE CONC    ZELEV    ZHILL    ZFLAG    AVE     GRP      NUM YRS   NET ID
*  ____________ ____________ _____________ _______ _______ _______ _______ ________ _________ ________
   367030.00000 3792240.00000       0.13409  291.74  291.74    0.00 ANNUAL  ALL      00000005
   366644.00000 3792082.00000       0.08559  288.12  288.12    0.00 ANNUAL  ALL      00000005
   366494.00000 3791913.00000       0.05363  284.75  284.75    0.00 ANNUAL  ALL      00000005
   366294.00000 3791729.00000       0.06499  281.09  281.09    0.00 ANNUAL  ALL      00000005
   366214.00000 3791536.00000       0.07270  278.63  278.63    0.00 ANNUAL  ALL      00000005
   366272.00000 3791136.00000       0.04062  275.44  275.44    0.00 ANNUAL  ALL      00000005
   366526.00000 3790962.00000       0.06707  274.47  274.47    0.00 ANNUAL  ALL      00000005
   367107.00000 3791450.00000       0.07387  282.84  282.84    0.00 ANNUAL  ALL      00000005
   367095.00000 3791634.00000       0.06829  284.00  284.00    0.00 ANNUAL  ALL      00000005
   367081.00000 3791995.00000       0.04046  288.61  288.61    0.00 ANNUAL  ALL      00000005
   367267.00000 3792154.00000       0.02559  292.45  292.45    0.00 ANNUAL  ALL      00000005
   366189.59000 3791104.07000       0.02934  274.95  274.95    0.00 ANNUAL  ALL      00000005
   366099.38000 3791247.03000       0.02943  275.48  275.48    0.00 ANNUAL  ALL      00000005
   366105.02000 3791050.71000       0.01919  274.01  274.01    0.00 ANNUAL  ALL      00000005
   366014.81000 3791193.67000       0.01898  274.89  274.89    0.00 ANNUAL  ALL      00000005
   366020.45000 3790997.34000       0.01286  272.77  272.77    0.00 ANNUAL  ALL      00000005
   365930.24000 3791140.30000       0.01340  274.30  274.30    0.00 ANNUAL  ALL      00000005
   365935.88000 3790943.98000       0.00928  272.18  272.18    0.00 ANNUAL  ALL      00000005
   365845.67000 3791086.94000       0.00989  273.71  273.71    0.00 ANNUAL  ALL      00000005
   365851.31000 3790890.61000       0.00713  271.59  271.59    0.00 ANNUAL  ALL      00000005
   365761.10000 3791033.57000       0.00758  272.72  272.72    0.00 ANNUAL  ALL      00000005
   366073.60000 3791341.20000       0.03833  276.50  276.50    0.00 ANNUAL  ALL      00000005
   365975.61000 3791321.27000       0.02164  276.27  276.27    0.00 ANNUAL  ALL      00000005
   365889.97000 3791240.60000       0.01384  275.38  275.38    0.00 ANNUAL  ALL      00000005
   365865.26000 3791362.07000       0.01564  276.53  276.53    0.00 ANNUAL  ALL      00000005
   365809.87000 3791176.09000       0.01026  274.10  274.10    0.00 ANNUAL  ALL      00000005
   365779.62000 3791281.40000       0.01075  274.81  274.81    0.00 ANNUAL  ALL      00000005
   365716.36000 3791145.01000       0.00801  273.96  273.96    0.00 ANNUAL  ALL      00000005
   365681.63000 3791261.46000       0.00841  274.58  274.58    0.00 ANNUAL  ALL      00000005
   366076.49000 3791464.13000       0.05488  277.83  277.83    0.00 ANNUAL  ALL      00000005
   365998.83000 3791527.12000       0.03159  278.50  278.50    0.00 ANNUAL  ALL      00000005
   365973.42000 3791423.47000       0.02707  277.37  277.37    0.00 ANNUAL  ALL      00000005
   365921.16000 3791590.12000       0.02203  279.17  279.17    0.00 ANNUAL  ALL      00000005
   365895.75000 3791486.46000       0.02038  278.04  278.04    0.00 ANNUAL  ALL      00000005
   365843.50000 3791653.11000       0.01669  279.34  279.34    0.00 ANNUAL  ALL      00000005
   365818.09000 3791549.45000       0.01568  277.90  277.90    0.00 ANNUAL  ALL      00000005
   365792.68000 3791445.79000       0.01372  276.59  276.59    0.00 ANNUAL  ALL      00000005
   365765.83000 3791716.10000       0.01344  279.51  279.51    0.00 ANNUAL  ALL      00000005
   365740.42000 3791612.44000       0.01289  278.38  278.38    0.00 ANNUAL  ALL      00000005
   365715.01000 3791508.78000       0.01167  277.26  277.26    0.00 ANNUAL  ALL      00000005
   365689.60000 3791405.13000       0.01002  276.13  276.13    0.00 ANNUAL  ALL      00000005
   366137.76000 3791532.55000       0.06029  278.58  278.58    0.00 ANNUAL  ALL      00000005
   366074.18000 3791605.72000       0.03453  279.36  279.36    0.00 ANNUAL  ALL      00000005
   366041.61000 3791701.28000       0.02549  280.39  280.39    0.00 ANNUAL  ALL      00000005
   366003.40000 3791792.77000       0.02117  281.00  281.00    0.00 ANNUAL  ALL      00000005
   365918.85000 3791731.70000       0.01847  280.70  280.70    0.00 ANNUAL  ALL      00000005
   365969.76000 3791887.57000       0.01833  281.39  281.39    0.00 ANNUAL  ALL      00000005
   365890.50000 3791830.32000       0.01593  281.00  281.00    0.00 ANNUAL  ALL      00000005
   366170.33000 3791697.05000       0.03668  280.36  280.36    0.00 ANNUAL  ALL      00000005
   365787.57000 3791832.67000       0.01310  280.77  280.77    0.00 ANNUAL  ALL      00000005
   366252.16000 3791821.78000       0.06111  282.30  282.30    0.00 ANNUAL  ALL      00000005
   366129.50000 3791817.32000       0.03131  281.13  281.13    0.00 ANNUAL  ALL      00000005
   366207.76000 3791936.22000       0.03632  283.15  283.15    0.00 ANNUAL  ALL      00000005
   366085.10000 3791931.75000       0.02428  281.89  281.89    0.00 ANNUAL  ALL      00000005
   366001.58000 3791986.73000       0.01814  282.47  282.47    0.00 ANNUAL  ALL      00000005
   365839.78000 3791922.81000       0.01356  281.76  281.76    0.00 ANNUAL  ALL      00000005
   365918.05000 3792041.71000       0.01432  283.05  283.05    0.00 ANNUAL  ALL      00000005
   366373.22000 3791926.24000       0.06641  284.88  284.88    0.00 ANNUAL  ALL      00000005
   366495.46000 3791928.20000       0.05092  284.92  284.92    0.00 ANNUAL  ALL      00000005
   366325.07000 3792013.88000       0.03867  285.53  285.53    0.00 ANNUAL  ALL      00000005
   366432.73000 3792027.20000       0.04165  286.95  286.95    0.00 ANNUAL  ALL      00000005
   366323.47000 3792113.87000       0.02944  287.47  287.47    0.00 ANNUAL  ALL      00000005
   366195.00000 3792056.52000       0.02570  284.52  284.52    0.00 ANNUAL  ALL      00000005
```

366431.13000	3792127.19000	0.03420	288.06	288.06	0.00	ANNUAL	ALL	00000005
366321.86000	3792213.86000	0.02442	287.99	287.99	0.00	ANNUAL	ALL	00000005
366228.77000	3792189.18000	0.02162	287.12	287.12	0.00	ANNUAL	ALL	00000005
366146.85000	3792144.17000	0.02011	285.56	285.56	0.00	ANNUAL	ALL	00000005
366076.09000	3792078.84000	0.01892	283.93	283.93	0.00	ANNUAL	ALL	00000005
366429.53000	3792227.18000	0.02892	289.31	289.31	0.00	ANNUAL	ALL	00000005
366308.62000	3792310.76000	0.02054	289.47	289.47	0.00	ANNUAL	ALL	00000005
366192.26000	3792279.91000	0.01773	287.60	287.60	0.00	ANNUAL	ALL	00000005
366089.86000	3792223.65000	0.01622	285.65	285.65	0.00	ANNUAL	ALL	00000005
366001.41000	3792141.99000	0.01512	284.15	284.15	0.00	ANNUAL	ALL	00000005
366427.92000	3792327.17000	0.02446	291.21	291.21	0.00	ANNUAL	ALL	00000005
366397.15000	3791832.50000	0.19234	283.82	283.82	0.00	ANNUAL	ALL	00000005
366575.11000	3792149.95000	0.04877	288.65	288.65	0.00	ANNUAL	ALL	00000005
366668.93000	3792173.57000	0.07008	289.60	289.60	0.00	ANNUAL	ALL	00000005
366762.76000	3792197.19000	0.07416	290.25	290.25	0.00	ANNUAL	ALL	00000005
366550.70000	3792246.93000	0.03596	290.37	290.37	0.00	ANNUAL	ALL	00000005
366644.52000	3792270.55000	0.04069	290.64	290.64	0.00	ANNUAL	ALL	00000005
366738.34000	3792294.17000	0.04456	291.83	291.83	0.00	ANNUAL	ALL	00000005
366526.28000	3792343.90000	0.02671	291.42	291.42	0.00	ANNUAL	ALL	00000005
366620.11000	3792367.52000	0.02858	291.69	291.69	0.00	ANNUAL	ALL	00000005
366713.93000	3792391.14000	0.03097	292.66	292.66	0.00	ANNUAL	ALL	00000005
366408.05000	3792417.26000	0.02000	291.96	291.96	0.00	ANNUAL	ALL	00000005
366501.87000	3792440.88000	0.02096	292.46	292.46	0.00	ANNUAL	ALL	00000005
366595.69000	3792464.50000	0.02193	292.84	292.84	0.00	ANNUAL	ALL	00000005
366689.52000	3792488.12000	0.02289	294.00	294.00	0.00	ANNUAL	ALL	00000005
366317.23000	3792471.96000	0.01645	292.06	292.06	0.00	ANNUAL	ALL	00000005
366184.43000	3792387.41000	0.01503	288.64	288.64	0.00	ANNUAL	ALL	00000005
366477.46000	3792537.85000	0.01698	293.81	293.81	0.00	ANNUAL	ALL	00000005
366571.28000	3792561.47000	0.01740	294.56	294.56	0.00	ANNUAL	ALL	00000005
366665.10000	3792585.09000	0.01752	295.10	295.10	0.00	ANNUAL	ALL	00000005
366862.54000	3792165.94000	0.06799	290.54	290.54	0.00	ANNUAL	ALL	00000005
366932.33000	3792085.91000	0.06202	289.69	289.69	0.00	ANNUAL	ALL	00000005
366907.59000	3792251.47000	0.06572	291.95	291.95	0.00	ANNUAL	ALL	00000005
366979.16000	3792319.67000	0.05586	293.23	293.23	0.00	ANNUAL	ALL	00000005
366836.11000	3792387.67000	0.03490	293.24	293.24	0.00	ANNUAL	ALL	00000005
367048.17000	3792257.38000	0.10789	292.16	292.16	0.00	ANNUAL	ALL	00000005
367052.26000	3792386.88000	0.03769	293.96	293.96	0.00	ANNUAL	ALL	00000005
366943.10000	3792458.17000	0.02740	294.72	294.72	0.00	ANNUAL	ALL	00000005
366819.84000	3792484.41000	0.02465	294.97	294.97	0.00	ANNUAL	ALL	00000005
367123.54000	3792323.10000	0.04370	293.34	293.34	0.00	ANNUAL	ALL	00000005
367126.11000	3792453.60000	0.02405	295.46	295.46	0.00	ANNUAL	ALL	00000005
367050.31000	3792503.10000	0.02275	295.29	295.29	0.00	ANNUAL	ALL	00000005
366974.51000	3792552.61000	0.01998	295.74	295.74	0.00	ANNUAL	ALL	00000005
366846.10000	3792579.94000	0.01856	296.03	296.03	0.00	ANNUAL	ALL	00000005
366755.60000	3792582.52000	0.01828	295.28	295.28	0.00	ANNUAL	ALL	00000005
367198.90000	3792388.83000	0.02334	295.01	295.01	0.00	ANNUAL	ALL	00000005
366792.31000	3792096.48000	0.15215	289.39	289.39	0.00	ANNUAL	ALL	00000005
367147.25000	3792560.30000	0.01644	297.18	297.18	0.00	ANNUAL	ALL	00000005
367112.95000	3792654.23000	0.01368	298.59	298.59	0.00	ANNUAL	ALL	00000005
366995.52000	3792648.16000	0.01530	297.56	297.56	0.00	ANNUAL	ALL	00000005
367243.10000	3792639.28000	0.01137	299.13	299.13	0.00	ANNUAL	ALL	00000005
367122.70000	3792750.44000	0.01101	299.87	299.87	0.00	ANNUAL	ALL	00000005
366975.90000	3792742.85000	0.01244	298.80	298.80	0.00	ANNUAL	ALL	00000005
366843.93000	3792694.67000	0.01402	297.78	297.78	0.00	ANNUAL	ALL	00000005
367267.52000	3792736.25000	0.00918	300.74	300.74	0.00	ANNUAL	ALL	00000005
367236.79000	3792266.23000	0.02610	294.06	294.06	0.00	ANNUAL	ALL	00000005
367334.23000	3792243.75000	0.01740	293.92	293.92	0.00	ANNUAL	ALL	00000005
367431.67000	3792221.28000	0.01271	294.25	294.25	0.00	ANNUAL	ALL	00000005
367413.49000	3792333.23000	0.01213	295.73	295.73	0.00	ANNUAL	ALL	00000005
367370.92000	3792430.27000	0.01217	296.36	296.36	0.00	ANNUAL	ALL	00000005
367279.58000	3792497.49000	0.01380	297.19	297.19	0.00	ANNUAL	ALL	00000005
367528.25000	3792204.13000	0.00993	294.45	294.45	0.00	ANNUAL	ALL	00000005
367507.47000	3792332.08000	0.00951	296.47	296.47	0.00	ANNUAL	ALL	00000005
367451.89000	3792485.63000	0.00928	298.37	298.37	0.00	ANNUAL	ALL	00000005
367347.50000	3792562.45000	0.01053	297.91	297.91	0.00	ANNUAL	ALL	00000005
367625.88000	3792180.47000	0.00809	294.82	294.82	0.00	ANNUAL	ALL	00000005
367605.68000	3792304.86000	0.00785	296.32	296.32	0.00	ANNUAL	ALL	00000005
367585.48000	3792429.25000	0.00748	298.50	298.50	0.00	ANNUAL	ALL	00000005
367538.18000	3792537.07000	0.00746	299.28	299.28	0.00	ANNUAL	ALL	00000005
367436.69000	3792611.76000	0.00821	299.49	299.49	0.00	ANNUAL	ALL	00000005
367138.03000	3792115.65000	0.06694	291.05	291.05	0.00	ANNUAL	ALL	00000005

367218.18000	3792165.58000	0.03432	292.32	292.32	0.00	ANNUAL	ALL	00000005
367115.23000	3792018.29000	0.04168	288.99	288.99	0.00	ANNUAL	ALL	00000005
367216.12000	3792034.94000	0.02969	290.24	290.24	0.00	ANNUAL	ALL	00000005
367285.91000	3792101.50000	0.02331	291.82	291.82	0.00	ANNUAL	ALL	00000005
367092.44000	3791920.92000	0.03203	287.65	287.65	0.00	ANNUAL	ALL	00000005
367193.33000	3791937.57000	0.02634	289.12	289.12	0.00	ANNUAL	ALL	00000005
367309.07000	3791975.02000	0.01947	289.55	289.55	0.00	ANNUAL	ALL	00000005
367368.50000	3792058.23000	0.01693	291.07	291.07	0.00	ANNUAL	ALL	00000005
367069.65000	3791823.55000	0.03232	286.26	286.26	0.00	ANNUAL	ALL	00000005
367170.53000	3791840.20000	0.02630	287.12	287.12	0.00	ANNUAL	ALL	00000005
367271.42000	3791856.85000	0.02013	288.26	288.26	0.00	ANNUAL	ALL	00000005
367361.94000	3791890.14000	0.01598	288.79	288.79	0.00	ANNUAL	ALL	00000005
367421.37000	3791973.35000	0.01402	290.55	290.55	0.00	ANNUAL	ALL	00000005
367480.79000	3792056.55000	0.01192	292.22	292.22	0.00	ANNUAL	ALL	00000005
367046.85000	3791726.18000	0.04228	284.81	284.81	0.00	ANNUAL	ALL	00000005
367147.74000	3791742.83000	0.03198	285.49	285.49	0.00	ANNUAL	ALL	00000005
367248.62000	3791759.48000	0.02204	286.37	286.37	0.00	ANNUAL	ALL	00000005
367349.51000	3791776.13000	0.01624	286.86	286.86	0.00	ANNUAL	ALL	00000005
367429.67000	3791826.06000	0.01330	288.09	288.09	0.00	ANNUAL	ALL	00000005
367489.09000	3791909.27000	0.01171	289.85	289.85	0.00	ANNUAL	ALL	00000005
367548.52000	3791992.47000	0.01021	291.69	291.69	0.00	ANNUAL	ALL	00000005
367607.95000	3792075.68000	0.00875	293.36	293.36	0.00	ANNUAL	ALL	00000005
367224.16000	3791655.67000	0.02779	285.08	285.08	0.00	ANNUAL	ALL	00000005
367382.18000	3791675.47000	0.01501	285.86	285.86	0.00	ANNUAL	ALL	00000005
367296.14000	3791586.25000	0.02139	284.34	284.34	0.00	ANNUAL	ALL	00000005
367014.86000	3791995.11000	0.04389	288.44	288.44	0.00	ANNUAL	ALL	00000005
367518.41000	3791796.26000	0.01077	288.84	288.84	0.00	ANNUAL	ALL	00000005
367529.79000	3791699.50000	0.01033	287.39	287.39	0.00	ANNUAL	ALL	00000005
367201.26000	3791534.06000	0.03923	283.76	283.76	0.00	ANNUAL	ALL	00000005
367175.42000	3791412.71000	0.03325	282.44	282.44	0.00	ANNUAL	ALL	00000005
367100.98000	3791351.05000	0.02930	281.76	281.76	0.00	ANNUAL	ALL	00000005
367026.54000	3791289.40000	0.02113	281.08	281.08	0.00	ANNUAL	ALL	00000005
366952.10000	3791227.75000	0.01677	280.41	280.41	0.00	ANNUAL	ALL	00000005
366877.67000	3791166.10000	0.01522	279.73	279.73	0.00	ANNUAL	ALL	00000005
366803.23000	3791104.44000	0.01563	278.16	278.16	0.00	ANNUAL	ALL	00000005
366728.79000	3791042.79000	0.01794	277.37	277.37	0.00	ANNUAL	ALL	00000005
366654.35000	3790981.14000	0.02396	275.89	275.89	0.00	ANNUAL	ALL	00000005
366579.91000	3790919.49000	0.03292	274.25	274.25	0.00	ANNUAL	ALL	00000005
366505.48000	3790857.84000	0.03181	273.34	273.34	0.00	ANNUAL	ALL	00000005
367273.22000	3791391.88000	0.01916	282.23	282.23	0.00	ANNUAL	ALL	00000005
367164.77000	3791274.04000	0.01733	280.94	280.94	0.00	ANNUAL	ALL	00000005
367090.33000	3791212.39000	0.01513	280.26	280.26	0.00	ANNUAL	ALL	00000005
367015.89000	3791150.73000	0.01343	279.58	279.58	0.00	ANNUAL	ALL	00000005
366941.45000	3791089.08000	0.01267	278.91	278.91	0.00	ANNUAL	ALL	00000005
366867.01000	3791027.43000	0.01285	278.18	278.18	0.00	ANNUAL	ALL	00000005
366792.58000	3790965.78000	0.01412	276.55	276.55	0.00	ANNUAL	ALL	00000005
366718.14000	3790904.12000	0.01610	275.87	275.87	0.00	ANNUAL	ALL	00000005
366643.70000	3790842.47000	0.01779	274.27	274.27	0.00	ANNUAL	ALL	00000005
366569.26000	3790780.82000	0.01665	272.63	272.63	0.00	ANNUAL	ALL	00000005
367337.01000	3791314.86000	0.01305	281.41	281.41	0.00	ANNUAL	ALL	00000005
367396.87000	3791492.41000	0.01420	283.34	283.34	0.00	ANNUAL	ALL	00000005
367228.55000	3791197.02000	0.01225	280.12	280.12	0.00	ANNUAL	ALL	00000005
367154.11000	3791135.37000	0.01154	279.44	279.44	0.00	ANNUAL	ALL	00000005
367079.68000	3791073.72000	0.01088	278.76	278.76	0.00	ANNUAL	ALL	00000005
367005.24000	3791012.07000	0.01057	278.08	278.08	0.00	ANNUAL	ALL	00000005
366930.80000	3790950.41000	0.01065	277.40	277.40	0.00	ANNUAL	ALL	00000005
366856.36000	3790888.76000	0.01107	276.57	276.57	0.00	ANNUAL	ALL	00000005
366781.93000	3790827.11000	0.01179	275.05	275.05	0.00	ANNUAL	ALL	00000005
366707.49000	3790765.46000	0.01192	274.29	274.29	0.00	ANNUAL	ALL	00000005
366633.05000	3790703.81000	0.01113	272.36	272.36	0.00	ANNUAL	ALL	00000005
367412.14000	3791256.58000	0.00993	280.79	280.79	0.00	ANNUAL	ALL	00000005
367491.96000	3791493.30000	0.01091	283.73	283.73	0.00	ANNUAL	ALL	00000005
367292.34000	3791120.01000	0.00948	279.29	279.29	0.00	ANNUAL	ALL	00000005
367217.90000	3791058.36000	0.00925	278.62	278.62	0.00	ANNUAL	ALL	00000005
367143.46000	3790996.70000	0.00900	277.94	277.94	0.00	ANNUAL	ALL	00000005
367069.03000	3790935.05000	0.00886	277.26	277.26	0.00	ANNUAL	ALL	00000005
366994.59000	3790873.40000	0.00883	276.85	276.85	0.00	ANNUAL	ALL	00000005
366920.15000	3790811.75000	0.00897	275.90	275.90	0.00	ANNUAL	ALL	00000005
366845.71000	3790750.10000	0.00908	274.95	274.95	0.00	ANNUAL	ALL	00000005
366771.27000	3790688.44000	0.00888	273.55	273.55	0.00	ANNUAL	ALL	00000005
366696.84000	3790626.79000	0.00836	272.38	272.38	0.00	ANNUAL	ALL	00000005

367473.09000	3791174.88000	0.00795	280.74	280.74	0.00	ANNUAL	ALL	00000005
367558.14000	3791315.34000	0.00813	282.35	282.35	0.00	ANNUAL	ALL	00000005
367590.44000	3791467.04000	0.00863	284.09	284.09	0.00	ANNUAL	ALL	00000005
367356.13000	3791042.99000	0.00773	278.47	278.47	0.00	ANNUAL	ALL	00000005
367281.69000	3790981.34000	0.00768	277.79	277.79	0.00	ANNUAL	ALL	00000005
367207.25000	3790919.69000	0.00757	277.11	277.11	0.00	ANNUAL	ALL	00000005
367132.81000	3790858.04000	0.00746	277.00	277.00	0.00	ANNUAL	ALL	00000005
367058.37000	3790796.39000	0.00738	276.76	276.76	0.00	ANNUAL	ALL	00000005
366983.94000	3790734.73000	0.00741	275.61	275.61	0.00	ANNUAL	ALL	00000005
366909.50000	3790673.08000	0.00731	274.40	274.40	0.00	ANNUAL	ALL	00000005
366835.06000	3790611.43000	0.00707	273.17	273.17	0.00	ANNUAL	ALL	00000005
366760.62000	3790549.78000	0.00667	271.71	271.71	0.00	ANNUAL	ALL	00000005
366366.76000	3790868.62000	0.03187	272.86	272.86	0.00	ANNUAL	ALL	00000005
366301.28000	3790942.71000	0.03638	273.82	273.82	0.00	ANNUAL	ALL	00000005
366235.80000	3791016.79000	0.03216	274.01	274.01	0.00	ANNUAL	ALL	00000005
366359.01000	3790768.93000	0.01588	271.35	271.35	0.00	ANNUAL	ALL	00000005
366226.35000	3790876.48000	0.01740	272.50	272.50	0.00	ANNUAL	ALL	00000005
366160.87000	3790950.57000	0.01769	273.12	273.12	0.00	ANNUAL	ALL	00000005
366284.08000	3790702.70000	0.01055	270.62	270.62	0.00	ANNUAL	ALL	00000005
366489.97000	3790658.44000	0.01039	270.29	270.29	0.00	ANNUAL	ALL	00000005
366151.43000	3790810.26000	0.01113	271.44	271.44	0.00	ANNUAL	ALL	00000005
366085.95000	3790884.34000	0.01143	271.56	271.56	0.00	ANNUAL	ALL	00000005
366209.15000	3790636.48000	0.00778	269.90	269.90	0.00	ANNUAL	ALL	00000005
366343.50000	3790569.53000	0.00740	269.19	269.19	0.00	ANNUAL	ALL	00000005
366482.21000	3790558.74000	0.00754	269.10	269.10	0.00	ANNUAL	ALL	00000005
366076.50000	3790744.03000	0.00807	270.04	270.04	0.00	ANNUAL	ALL	00000005
366011.02000	3790818.12000	0.00833	270.83	270.83	0.00	ANNUAL	ALL	00000005
366151.02000	3790561.88000	0.00612	269.08	269.08	0.00	ANNUAL	ALL	00000005
366234.98000	3790520.04000	0.00605	268.64	268.64	0.00	ANNUAL	ALL	00000005
366318.95000	3790478.20000	0.00583	268.20	268.20	0.00	ANNUAL	ALL	00000005
366492.34000	3790464.71000	0.00596	268.08	268.08	0.00	ANNUAL	ALL	00000005
366581.77000	3790493.07000	0.00634	268.74	268.74	0.00	ANNUAL	ALL	00000005
366671.20000	3790521.42000	0.00660	270.22	270.22	0.00	ANNUAL	ALL	00000005
366067.05000	3790603.72000	0.00603	269.13	269.13	0.00	ANNUAL	ALL	00000005
366001.57000	3790677.81000	0.00630	269.31	269.31	0.00	ANNUAL	ALL	00000005
365936.09000	3790751.89000	0.00649	270.10	270.10	0.00	ANNUAL	ALL	00000005
366441.69000	3790934.85000	0.10591	274.16	274.16	0.00	ANNUAL	ALL	00000005
367111.63000	3791489.72000	0.10582	283.27	283.27	0.00	ANNUAL	ALL	00000005
367032.23000	3791650.21000	0.06774	284.00	284.00	0.00	ANNUAL	ALL	00000005
367026.80000	3791705.02000	0.04686	284.58	284.58	0.00	ANNUAL	ALL	00000005
367004.60000	3791824.64000	0.03404	285.87	285.87	0.00	ANNUAL	ALL	00000005
366979.97000	3791877.66000	0.03479	286.44	286.44	0.00	ANNUAL	ALL	00000005
366936.23000	3791933.33000	0.04012	287.08	287.08	0.00	ANNUAL	ALL	00000005
367022.27000	3792022.55000	0.05005	289.02	289.02	0.00	ANNUAL	ALL	00000005
367109.97000	3792214.86000	0.09526	292.02	292.02	0.00	ANNUAL	ALL	00000005
367135.60000	3792208.86000	0.06914	292.29	292.29	0.00	ANNUAL	ALL	00000005
367145.41000	3792251.39000	0.05273	292.87	292.87	0.00	ANNUAL	ALL	00000005
367073.98000	3792269.38000	0.08616	292.52	292.52	0.00	ANNUAL	ALL	00000005
366953.47000	3792101.98000	0.06993	289.87	289.87	0.00	ANNUAL	ALL	00000005
366856.96000	3792020.19000	0.07169	288.58	288.58	0.00	ANNUAL	ALL	00000005
366787.17000	3792100.22000	0.15890	289.41	289.41	0.00	ANNUAL	ALL	00000005
366505.70000	3792029.36000	0.04227	287.01	287.01	0.00	ANNUAL	ALL	00000005
366497.06000	3791828.21000	0.06959	283.83	283.83	0.00	ANNUAL	ALL	00000005
366374.82000	3791826.25000	0.20175	283.67	283.67	0.00	ANNUAL	ALL	00000005
366257.42000	3791647.90000	0.04703	279.85	279.85	0.00	ANNUAL	ALL	00000005
366223.02000	3791586.94000	0.05328	279.18	279.18	0.00	ANNUAL	ALL	00000005
366218.11000	3791478.88000	0.13256	278.01	278.01	0.00	ANNUAL	ALL	00000005
366207.45000	3791452.00000	0.19805	277.72	277.72	0.00	ANNUAL	ALL	00000005
366173.15000	3791439.02000	0.17342	277.57	277.57	0.00	ANNUAL	ALL	00000005
366159.24000	3791421.87000	0.15440	277.39	277.39	0.00	ANNUAL	ALL	00000005
366183.95000	3791300.40000	0.06044	277.00	277.00	0.00	ANNUAL	ALL	00000005
366274.16000	3791157.44000	0.04008	275.64	275.64	0.00	ANNUAL	ALL	00000005
366310.73000	3791083.02000	0.05606	275.44	275.44	0.00	ANNUAL	ALL	00000005

** CONCUNIT ug/m^3
** DEPUNIT g/m^2

```
* AERMOD ( 14134): Pacoima Spreading Grounds Improvement Project Diesel PM10                06/03/15
* AERMET ( 14134):                                                                           15:30:24
* MODELING OPTIONS USED:  RegDFAULT CONC      ELEV
*         PLOT FILE OF  HIGH   1ST HIGH  1-HR VALUES FOR SOURCE GROUP: ALL
*         FOR A TOTAL OF   268 RECEPTORS.
*         FORMAT: (3(1X,F13.5),3(1X,F8.2),3X,A5,2X,A8,2X,A5,5X,A8,2X,I8)
*        X             Y      AVERAGE CONC    ZELEV    ZHILL    ZFLAG    AVE     GRP       RANK     NET ID
DATE(CONC)
*
```

X	Y	AVERAGE CONC	ZELEV	ZHILL	ZFLAG	AVE	GRP	RANK	NET ID	DATE(CONC)
367030.00000	3792240.00000	1.31494	291.74	291.74	0.00	1-HR	ALL	1ST		12121017
366644.00000	3792082.00000	1.02454	288.12	288.12	0.00	1-HR	ALL	1ST		8102818
366494.00000	3791913.00000	1.00327	284.75	284.75	0.00	1-HR	ALL	1ST		9032819
366294.00000	3791729.00000	1.00825	281.09	281.09	0.00	1-HR	ALL	1ST		11012619
366214.00000	3791536.00000	1.02205	278.63	278.63	0.00	1-HR	ALL	1ST		12121017
366272.00000	3791136.00000	0.55175	275.44	275.44	0.00	1-HR	ALL	1ST		9032419
366526.00000	3790962.00000	1.09528	274.47	274.47	0.00	1-HR	ALL	1ST		8093019
367107.00000	3791450.00000	1.18761	282.84	282.84	0.00	1-HR	ALL	1ST		10092719
367095.00000	3791634.00000	0.85900	284.00	284.00	0.00	1-HR	ALL	1ST		8042519
367081.00000	3791995.00000	0.57299	288.61	288.61	0.00	1-HR	ALL	1ST		9011308
367267.00000	3792154.00000	0.76363	292.45	292.45	0.00	1-HR	ALL	1ST		10100119
366189.59000	3791104.07000	0.45999	274.95	274.95	0.00	1-HR	ALL	1ST		11012519
366099.38000	3791247.03000	0.63849	275.48	275.48	0.00	1-HR	ALL	1ST		11011319
366105.02000	3791050.71000	0.40979	274.01	274.01	0.00	1-HR	ALL	1ST		11012219
366014.81000	3791193.67000	0.49919	274.89	274.89	0.00	1-HR	ALL	1ST		11011319
366020.45000	3790997.34000	0.34970	272.77	272.77	0.00	1-HR	ALL	1ST		9112919
365930.24000	3791140.30000	0.39491	274.30	274.30	0.00	1-HR	ALL	1ST		11011319
365935.88000	3790943.98000	0.29572	272.18	272.18	0.00	1-HR	ALL	1ST		9112919
365845.67000	3791086.94000	0.33028	273.71	273.71	0.00	1-HR	ALL	1ST		9011108
365851.31000	3790890.61000	0.24135	271.59	271.59	0.00	1-HR	ALL	1ST		9112919
365761.10000	3791033.57000	0.28107	272.72	272.72	0.00	1-HR	ALL	1ST		9011108
366073.60000	3791341.20000	0.77018	276.50	276.50	0.00	1-HR	ALL	1ST		11012619
365975.61000	3791321.27000	0.48862	276.27	276.27	0.00	1-HR	ALL	1ST		11012619
365889.97000	3791240.60000	0.38628	275.38	275.38	0.00	1-HR	ALL	1ST		11112218
365865.26000	3791362.07000	0.35386	276.53	276.53	0.00	1-HR	ALL	1ST		11011108
365809.87000	3791176.09000	0.32138	274.10	274.10	0.00	1-HR	ALL	1ST		12050119
365779.62000	3791281.40000	0.29783	274.81	274.81	0.00	1-HR	ALL	1ST		11121608
365716.36000	3791145.01000	0.27611	273.96	273.96	0.00	1-HR	ALL	1ST		10010119
365681.63000	3791261.46000	0.25732	274.58	274.58	0.00	1-HR	ALL	1ST		11121608
366076.49000	3791464.13000	0.76994	277.83	277.83	0.00	1-HR	ALL	1ST		8100719
365998.83000	3791527.12000	0.55549	278.50	278.50	0.00	1-HR	ALL	1ST		10102818
365973.42000	3791423.47000	0.47959	277.37	277.37	0.00	1-HR	ALL	1ST		10122719
365921.16000	3791590.12000	0.44581	279.17	279.17	0.00	1-HR	ALL	1ST		8100819
365895.75000	3791486.46000	0.36956	278.04	278.04	0.00	1-HR	ALL	1ST		12122219
365843.50000	3791653.11000	0.36429	279.34	279.34	0.00	1-HR	ALL	1ST		9103119
365818.09000	3791549.45000	0.29900	277.90	277.90	0.00	1-HR	ALL	1ST		8010608
365792.68000	3791445.79000	0.28651	276.59	276.59	0.00	1-HR	ALL	1ST		11120419
365765.83000	3791716.10000	0.31020	279.51	279.51	0.00	1-HR	ALL	1ST		10110519
365740.42000	3791612.44000	0.26996	278.38	278.38	0.00	1-HR	ALL	1ST		12112418
365715.01000	3791508.78000	0.23865	277.26	277.26	0.00	1-HR	ALL	1ST		8112618
365689.60000	3791405.13000	0.24356	276.13	276.13	0.00	1-HR	ALL	1ST		11011108
366137.76000	3791532.55000	1.02329	278.58	278.58	0.00	1-HR	ALL	1ST		12092318
366074.18000	3791605.72000	0.73131	279.36	279.36	0.00	1-HR	ALL	1ST		12092318
366041.61000	3791701.28000	0.57658	280.39	280.39	0.00	1-HR	ALL	1ST		10121117
366003.40000	3791792.77000	0.48284	281.00	281.00	0.00	1-HR	ALL	1ST		10121117
365918.85000	3791731.70000	0.45260	280.70	280.70	0.00	1-HR	ALL	1ST		12100219
365969.76000	3791887.57000	0.40753	281.39	281.39	0.00	1-HR	ALL	1ST		10121117
365890.50000	3791830.32000	0.38645	281.00	281.00	0.00	1-HR	ALL	1ST		8120619
366170.33000	3791697.05000	0.65157	280.36	280.36	0.00	1-HR	ALL	1ST		8112318
365787.57000	3791832.67000	0.32624	280.77	280.77	0.00	1-HR	ALL	1ST		10110518
366252.16000	3791821.78000	0.79008	282.30	282.30	0.00	1-HR	ALL	1ST		8021019
366129.50000	3791817.32000	0.51128	281.13	281.13	0.00	1-HR	ALL	1ST		8020918
366207.76000	3791936.22000	0.48485	283.15	283.15	0.00	1-HR	ALL	1ST		10122108
366085.10000	3791931.75000	0.42041	281.89	281.89	0.00	1-HR	ALL	1ST		8020918
366001.58000	3791986.73000	0.37485	282.47	282.47	0.00	1-HR	ALL	1ST		11021319
365839.78000	3791922.81000	0.33970	281.76	281.76	0.00	1-HR	ALL	1ST		12092318
365918.05000	3792041.71000	0.34191	283.05	283.05	0.00	1-HR	ALL	1ST		10121117
366373.22000	3791926.24000	1.05327	284.88	284.88	0.00	1-HR	ALL	1ST		8022519
366495.46000	3791928.20000	0.98700	284.92	284.92	0.00	1-HR	ALL	1ST		9032819
366325.07000	3792013.88000	0.72254	285.53	285.53	0.00	1-HR	ALL	1ST		12121017
366432.73000	3792027.20000	0.87677	286.95	286.95	0.00	1-HR	ALL	1ST		12101518
366323.47000	3792113.87000	0.62870	287.47	287.47	0.00	1-HR	ALL	1ST		8022519

366195.00000	3792056.52000	0.44237	284.52	284.52	0.00	1-HR	ALL	1ST	11122617
366431.13000	3792127.19000	0.70666	288.06	288.06	0.00	1-HR	ALL	1ST	10110218
366321.86000	3792213.86000	0.53828	287.99	287.99	0.00	1-HR	ALL	1ST	12101419
366228.77000	3792189.18000	0.47024	287.12	287.12	0.00	1-HR	ALL	1ST	11122617
366146.85000	3792144.17000	0.40132	285.56	285.56	0.00	1-HR	ALL	1ST	10100919
366076.09000	3792078.84000	0.37834	283.93	283.93	0.00	1-HR	ALL	1ST	8020918
366429.53000	3792227.18000	0.59723	289.31	289.31	0.00	1-HR	ALL	1ST	10110218
366308.62000	3792310.76000	0.48517	289.47	289.47	0.00	1-HR	ALL	1ST	12101419
366192.26000	3792279.91000	0.41668	287.60	287.60	0.00	1-HR	ALL	1ST	11122617
366089.86000	3792223.65000	0.36095	285.65	285.65	0.00	1-HR	ALL	1ST	10100919
366001.41000	3792141.99000	0.34052	284.15	284.15	0.00	1-HR	ALL	1ST	9011318
366427.92000	3792327.17000	0.51328	291.21	291.21	0.00	1-HR	ALL	1ST	9011419
366397.15000	3791832.50000	1.44715	283.82	283.82	0.00	1-HR	ALL	1ST	12101518
366575.11000	3792149.95000	0.66705	288.65	288.65	0.00	1-HR	ALL	1ST	10032019
366668.93000	3792173.57000	1.01730	289.60	289.60	0.00	1-HR	ALL	1ST	12092318
366762.76000	3792197.19000	1.02046	290.25	290.25	0.00	1-HR	ALL	1ST	12101518
366550.70000	3792246.93000	0.56829	290.37	290.37	0.00	1-HR	ALL	1ST	9111118
366644.52000	3792270.55000	0.70098	290.64	290.64	0.00	1-HR	ALL	1ST	8122319
366738.34000	3792294.17000	0.67614	291.83	291.83	0.00	1-HR	ALL	1ST	12121017
366526.28000	3792343.90000	0.50471	291.42	291.42	0.00	1-HR	ALL	1ST	12092318
366620.11000	3792367.52000	0.54380	291.69	291.69	0.00	1-HR	ALL	1ST	8011018
366713.93000	3792391.14000	0.50882	292.66	292.66	0.00	1-HR	ALL	1ST	12121017
366408.05000	3792417.26000	0.45618	291.96	291.96	0.00	1-HR	ALL	1ST	12012818
366501.87000	3792440.88000	0.44604	292.46	292.46	0.00	1-HR	ALL	1ST	10110218
366595.69000	3792464.50000	0.45123	292.84	292.84	0.00	1-HR	ALL	1ST	11100719
366689.52000	3792488.12000	0.42805	294.00	294.00	0.00	1-HR	ALL	1ST	8112318
366317.23000	3792471.96000	0.40659	292.06	292.06	0.00	1-HR	ALL	1ST	11121819
366184.43000	3792387.41000	0.38581	288.64	288.64	0.00	1-HR	ALL	1ST	11122617
366477.46000	3792537.85000	0.40336	293.81	293.81	0.00	1-HR	ALL	1ST	10110218
366571.28000	3792561.47000	0.39794	294.56	294.56	0.00	1-HR	ALL	1ST	11100719
366665.10000	3792585.09000	0.38456	295.10	295.10	0.00	1-HR	ALL	1ST	11011618
366862.54000	3792165.94000	1.25198	290.54	290.54	0.00	1-HR	ALL	1ST	8111917
366932.33000	3792085.91000	0.88268	289.69	289.69	0.00	1-HR	ALL	1ST	10092619
366907.59000	3792251.47000	0.97113	291.95	291.95	0.00	1-HR	ALL	1ST	8092418
366979.16000	3792319.67000	0.84146	293.23	293.23	0.00	1-HR	ALL	1ST	11121017
366836.11000	3792387.67000	0.61420	293.24	293.24	0.00	1-HR	ALL	1ST	9020318
367048.17000	3792257.38000	1.30097	292.16	292.16	0.00	1-HR	ALL	1ST	12120317
367052.26000	3792386.88000	0.79899	293.96	293.96	0.00	1-HR	ALL	1ST	12120317
366943.10000	3792458.17000	0.57858	294.72	294.72	0.00	1-HR	ALL	1ST	12102119
366819.84000	3792484.41000	0.50154	294.97	294.97	0.00	1-HR	ALL	1ST	8042519
367123.54000	3792323.10000	0.97186	293.34	293.34	0.00	1-HR	ALL	1ST	8092418
367126.11000	3792453.60000	0.63522	295.46	295.46	0.00	1-HR	ALL	1ST	8042519
367050.31000	3792503.10000	0.57876	295.29	295.29	0.00	1-HR	ALL	1ST	12120317
366974.51000	3792552.61000	0.50773	295.74	295.74	0.00	1-HR	ALL	1ST	9102319
366846.10000	3792579.94000	0.45183	296.03	296.03	0.00	1-HR	ALL	1ST	10121217
366755.60000	3792582.52000	0.40630	295.28	295.28	0.00	1-HR	ALL	1ST	8112117
367198.90000	3792388.83000	0.84076	295.01	295.01	0.00	1-HR	ALL	1ST	8111917
366792.31000	3792096.48000	1.72498	289.39	289.39	0.00	1-HR	ALL	1ST	8092418
367147.25000	3792560.30000	0.53241	297.18	297.18	0.00	1-HR	ALL	1ST	9082419
367112.95000	3792654.23000	0.47011	298.59	298.59	0.00	1-HR	ALL	1ST	12010218
366995.52000	3792648.16000	0.45708	297.56	297.56	0.00	1-HR	ALL	1ST	9102319
367243.10000	3792639.28000	0.52076	299.13	299.13	0.00	1-HR	ALL	1ST	11112917
367122.70000	3792750.44000	0.43502	299.87	299.87	0.00	1-HR	ALL	1ST	9102319
366975.90000	3792742.85000	0.41287	298.80	298.80	0.00	1-HR	ALL	1ST	10121217
366843.93000	3792694.67000	0.40150	297.78	297.78	0.00	1-HR	ALL	1ST	11011618
367267.52000	3792736.25000	0.47221	300.74	300.74	0.00	1-HR	ALL	1ST	9102618
367236.79000	3792266.23000	1.08033	294.06	294.06	0.00	1-HR	ALL	1ST	8022618
367334.23000	3792243.75000	0.76767	293.92	293.92	0.00	1-HR	ALL	1ST	10092619
367431.67000	3792221.28000	0.56933	294.25	294.25	0.00	1-HR	ALL	1ST	10122919
367413.49000	3792333.23000	0.68087	295.73	295.73	0.00	1-HR	ALL	1ST	10121218
367370.92000	3792430.27000	0.69687	296.36	296.36	0.00	1-HR	ALL	1ST	12011318
367279.58000	3792497.49000	0.66735	297.19	297.19	0.00	1-HR	ALL	1ST	8111917
367528.25000	3792204.13000	0.46980	294.45	294.45	0.00	1-HR	ALL	1ST	8102219
367507.47000	3792332.08000	0.58060	296.47	296.47	0.00	1-HR	ALL	1ST	10092619
367451.89000	3792485.63000	0.62490	298.37	298.37	0.00	1-HR	ALL	1ST	12011318
367347.50000	3792562.45000	0.59872	297.91	297.91	0.00	1-HR	ALL	1ST	11011219
367625.88000	3792180.47000	0.39178	294.82	294.82	0.00	1-HR	ALL	1ST	12102619
367605.68000	3792304.86000	0.47717	296.32	296.32	0.00	1-HR	ALL	1ST	10092619
367585.48000	3792429.25000	0.53494	298.50	298.50	0.00	1-HR	ALL	1ST	9012018
367538.18000	3792537.07000	0.55360	299.28	299.28	0.00	1-HR	ALL	1ST	10010818
367436.69000	3792611.76000	0.55809	299.49	299.49	0.00	1-HR	ALL	1ST	9022219

367138.03000	3792115.65000	1.02623	291.05	291.05	0.00	1-HR	ALL	1ST	8092519
367218.18000	3792165.58000	0.95517	292.32	292.32	0.00	1-HR	ALL	1ST	12012819
367115.23000	3792018.29000	0.65319	288.99	288.99	0.00	1-HR	ALL	1ST	12010108
367216.12000	3792034.94000	0.51166	290.24	290.24	0.00	1-HR	ALL	1ST	11030519
367285.91000	3792101.50000	0.58723	291.82	291.82	0.00	1-HR	ALL	1ST	12111317
367092.44000	3791920.92000	0.45118	287.65	287.65	0.00	1-HR	ALL	1ST	10110218
367193.33000	3791937.57000	0.41805	289.12	289.12	0.00	1-HR	ALL	1ST	8042519
367309.07000	3791975.02000	0.38989	289.55	289.55	0.00	1-HR	ALL	1ST	11122818
367368.50000	3792058.23000	0.40215	291.07	291.07	0.00	1-HR	ALL	1ST	8020608
367069.65000	3791823.55000	0.49048	286.26	286.26	0.00	1-HR	ALL	1ST	9110618
367170.53000	3791840.20000	0.46447	287.12	287.12	0.00	1-HR	ALL	1ST	9020318
367271.42000	3791856.85000	0.46812	288.26	288.26	0.00	1-HR	ALL	1ST	10032819
367361.94000	3791890.14000	0.43050	288.79	288.79	0.00	1-HR	ALL	1ST	12111618
367421.37000	3791973.35000	0.38448	290.55	290.55	0.00	1-HR	ALL	1ST	8120618
367480.79000	3792056.55000	0.36365	292.22	292.22	0.00	1-HR	ALL	1ST	9101419
367046.85000	3791726.18000	0.60753	284.81	284.81	0.00	1-HR	ALL	1ST	12120317
367147.74000	3791742.83000	0.56949	285.49	285.49	0.00	1-HR	ALL	1ST	9032819
367248.62000	3791759.48000	0.55532	286.37	286.37	0.00	1-HR	ALL	1ST	8111917
367349.51000	3791776.13000	0.47988	286.86	286.86	0.00	1-HR	ALL	1ST	12021018
367429.67000	3791826.06000	0.42252	288.09	288.09	0.00	1-HR	ALL	1ST	10101818
367489.09000	3791909.27000	0.38258	289.85	289.85	0.00	1-HR	ALL	1ST	11100919
367548.52000	3791992.47000	0.34575	291.69	291.69	0.00	1-HR	ALL	1ST	9011719
367607.95000	3792075.68000	0.33195	293.36	293.36	0.00	1-HR	ALL	1ST	8101519
367224.16000	3791655.67000	0.70001	285.08	285.08	0.00	1-HR	ALL	1ST	12021018
367382.18000	3791675.47000	0.46470	285.86	285.86	0.00	1-HR	ALL	1ST	9012018
367296.14000	3791586.25000	0.55282	284.34	284.34	0.00	1-HR	ALL	1ST	10122919
367014.86000	3791995.11000	0.61330	288.44	288.44	0.00	1-HR	ALL	1ST	12121319
367518.41000	3791796.26000	0.39265	288.84	288.84	0.00	1-HR	ALL	1ST	12010418
367529.79000	3791699.50000	0.38644	287.39	287.39	0.00	1-HR	ALL	1ST	10092619
367201.26000	3791534.06000	0.85236	283.76	283.76	0.00	1-HR	ALL	1ST	12012819
367175.42000	3791412.71000	0.71047	282.44	282.44	0.00	1-HR	ALL	1ST	11093018
367100.98000	3791351.05000	0.66825	281.76	281.76	0.00	1-HR	ALL	1ST	12010108
367026.54000	3791289.40000	0.52098	281.08	281.08	0.00	1-HR	ALL	1ST	12121319
366952.10000	3791227.75000	0.37833	280.41	280.41	0.00	1-HR	ALL	1ST	10011019
366877.67000	3791166.10000	0.38128	279.73	279.73	0.00	1-HR	ALL	1ST	10092619
366803.23000	3791104.44000	0.40145	278.16	278.16	0.00	1-HR	ALL	1ST	10092619
366728.79000	3791042.79000	0.48588	277.37	277.37	0.00	1-HR	ALL	1ST	12012819
366654.35000	3790981.14000	0.56164	275.89	275.89	0.00	1-HR	ALL	1ST	12111317
366579.91000	3790919.49000	0.70823	274.25	274.25	0.00	1-HR	ALL	1ST	11030519
366505.48000	3790857.84000	0.79367	273.34	273.34	0.00	1-HR	ALL	1ST	12010108
367273.22000	3791391.88000	0.47438	282.23	282.23	0.00	1-HR	ALL	1ST	9121008
367164.77000	3791274.04000	0.46985	280.94	280.94	0.00	1-HR	ALL	1ST	10010308
367090.33000	3791212.39000	0.42154	280.26	280.26	0.00	1-HR	ALL	1ST	9021719
367015.89000	3791150.73000	0.35047	279.58	279.58	0.00	1-HR	ALL	1ST	10011718
366941.45000	3791089.08000	0.31926	278.91	278.91	0.00	1-HR	ALL	1ST	8102219
366867.01000	3791027.43000	0.35253	278.18	278.18	0.00	1-HR	ALL	1ST	10100119
366792.58000	3790965.78000	0.36331	276.55	276.55	0.00	1-HR	ALL	1ST	12010119
366718.14000	3790904.12000	0.41004	275.87	275.87	0.00	1-HR	ALL	1ST	11011818
366643.70000	3790842.47000	0.46856	274.27	274.27	0.00	1-HR	ALL	1ST	10012908
366569.26000	3790780.82000	0.50144	272.63	272.63	0.00	1-HR	ALL	1ST	9121119
367337.01000	3791314.86000	0.36139	281.41	281.41	0.00	1-HR	ALL	1ST	10012408
367396.87000	3791492.41000	0.40664	283.34	283.34	0.00	1-HR	ALL	1ST	8020608
367228.55000	3791197.02000	0.35856	280.12	280.12	0.00	1-HR	ALL	1ST	12123108
367154.11000	3791135.37000	0.33708	279.44	279.44	0.00	1-HR	ALL	1ST	10010408
367079.68000	3791073.72000	0.30450	278.76	278.76	0.00	1-HR	ALL	1ST	12012318
367005.24000	3791012.07000	0.27067	278.08	278.08	0.00	1-HR	ALL	1ST	8111819
366930.80000	3790950.41000	0.28580	277.40	277.40	0.00	1-HR	ALL	1ST	12010417
366856.36000	3790888.76000	0.30413	276.57	276.57	0.00	1-HR	ALL	1ST	8020908
366781.93000	3790827.11000	0.31369	275.05	275.05	0.00	1-HR	ALL	1ST	11121008
366707.49000	3790765.46000	0.35887	274.29	274.29	0.00	1-HR	ALL	1ST	11020908
366633.05000	3790703.81000	0.37625	272.36	272.36	0.00	1-HR	ALL	1ST	10120108
367412.14000	3791256.58000	0.29249	280.79	280.79	0.00	1-HR	ALL	1ST	10012408
367491.96000	3791493.30000	0.33566	283.73	283.73	0.00	1-HR	ALL	1ST	8020608
367292.34000	3791120.01000	0.28906	279.29	279.29	0.00	1-HR	ALL	1ST	11011208
367217.90000	3791058.36000	0.28135	278.62	278.62	0.00	1-HR	ALL	1ST	8112908
367143.46000	3790996.70000	0.26435	277.94	277.94	0.00	1-HR	ALL	1ST	8122108
367069.03000	3790935.05000	0.24438	277.26	277.26	0.00	1-HR	ALL	1ST	12012318
366994.59000	3790873.40000	0.24154	276.85	276.85	0.00	1-HR	ALL	1ST	12091319
366920.15000	3790811.75000	0.24684	275.90	275.90	0.00	1-HR	ALL	1ST	9121008
366845.71000	3790750.10000	0.26306	274.95	274.95	0.00	1-HR	ALL	1ST	10012408
366771.27000	3790688.44000	0.28588	273.55	273.55	0.00	1-HR	ALL	1ST	11020908

366696.84000	3790626.79000	0.29928	272.38	272.38	0.00	1-HR	ALL	1ST	10120108
367473.09000	3791174.88000	0.24406	280.74	280.74	0.00	1-HR	ALL	1ST	10012408
367558.14000	3791315.34000	0.24885	282.35	282.35	0.00	1-HR	ALL	1ST	11022619
367590.44000	3791467.04000	0.28954	284.09	284.09	0.00	1-HR	ALL	1ST	8020608
367356.13000	3791042.99000	0.24329	278.47	278.47	0.00	1-HR	ALL	1ST	10120108
367281.69000	3790981.34000	0.24030	277.79	277.79	0.00	1-HR	ALL	1ST	11011408
367207.25000	3790919.69000	0.23189	277.11	277.11	0.00	1-HR	ALL	1ST	9123108
367132.81000	3790858.04000	0.21881	277.00	277.00	0.00	1-HR	ALL	1ST	9011608
367058.37000	3790796.39000	0.21254	276.76	276.76	0.00	1-HR	ALL	1ST	12110418
366983.94000	3790734.73000	0.21171	275.61	275.61	0.00	1-HR	ALL	1ST	10102018
366909.50000	3790673.08000	0.22322	274.40	274.40	0.00	1-HR	ALL	1ST	8013108
366835.06000	3790611.43000	0.23740	273.17	273.17	0.00	1-HR	ALL	1ST	11112808
366760.62000	3790549.78000	0.24586	271.71	271.71	0.00	1-HR	ALL	1ST	10120108
366366.76000	3790868.62000	0.74341	272.86	272.86	0.00	1-HR	ALL	1ST	9010919
366301.28000	3790942.71000	0.75030	273.82	273.82	0.00	1-HR	ALL	1ST	8102218
366235.80000	3791016.79000	0.53908	274.01	274.01	0.00	1-HR	ALL	1ST	8120419
366359.01000	3790768.93000	0.49789	271.35	271.35	0.00	1-HR	ALL	1ST	9010919
366226.35000	3790876.48000	0.45574	272.50	272.50	0.00	1-HR	ALL	1ST	8111419
366160.87000	3790950.57000	0.38340	273.12	273.12	0.00	1-HR	ALL	1ST	8021119
366284.08000	3790702.70000	0.37965	270.62	270.62	0.00	1-HR	ALL	1ST	11012219
366489.97000	3790658.44000	0.39102	270.29	270.29	0.00	1-HR	ALL	1ST	11010608
366151.43000	3790810.26000	0.33675	271.44	271.44	0.00	1-HR	ALL	1ST	8011219
366085.95000	3790884.34000	0.29525	271.56	271.56	0.00	1-HR	ALL	1ST	12112319
366209.15000	3790636.48000	0.30044	269.90	269.90	0.00	1-HR	ALL	1ST	11012219
366343.50000	3790569.53000	0.30763	269.19	269.19	0.00	1-HR	ALL	1ST	8112019
366482.21000	3790558.74000	0.31316	269.10	269.10	0.00	1-HR	ALL	1ST	12121919
366076.50000	3790744.03000	0.26510	270.04	270.04	0.00	1-HR	ALL	1ST	12050119
366011.02000	3790818.12000	0.25150	270.83	270.83	0.00	1-HR	ALL	1ST	11012219
366151.02000	3790561.88000	0.25779	269.08	269.08	0.00	1-HR	ALL	1ST	9112919
366234.98000	3790520.04000	0.26559	268.64	268.64	0.00	1-HR	ALL	1ST	10011019
366318.95000	3790478.20000	0.26484	268.20	268.20	0.00	1-HR	ALL	1ST	8112019
366492.34000	3790464.71000	0.26293	268.08	268.08	0.00	1-HR	ALL	1ST	12121919
366581.77000	3790493.07000	0.26371	268.74	268.74	0.00	1-HR	ALL	1ST	9123108
366671.20000	3790521.42000	0.25896	270.22	270.22	0.00	1-HR	ALL	1ST	12123108
366067.05000	3790603.72000	0.23473	269.13	269.13	0.00	1-HR	ALL	1ST	9112919
366001.57000	3790677.81000	0.22342	269.31	269.31	0.00	1-HR	ALL	1ST	9011108
365936.09000	3790751.89000	0.23115	270.10	270.10	0.00	1-HR	ALL	1ST	9112919
366441.69000	3790934.85000	0.96984	274.16	274.16	0.00	1-HR	ALL	1ST	10111019
367111.63000	3791489.72000	1.34905	283.27	283.27	0.00	1-HR	ALL	1ST	8093019
367032.23000	3791650.21000	0.81228	284.00	284.00	0.00	1-HR	ALL	1ST	12121017
367026.80000	3791705.02000	0.64948	284.58	284.58	0.00	1-HR	ALL	1ST	12121017
367004.60000	3791824.64000	0.48502	285.87	285.87	0.00	1-HR	ALL	1ST	12121017
366979.97000	3791877.66000	0.45527	286.44	286.44	0.00	1-HR	ALL	1ST	11122617
366936.23000	3791933.33000	0.52541	287.08	287.08	0.00	1-HR	ALL	1ST	11030519
367022.27000	3792022.55000	0.71987	289.02	289.02	0.00	1-HR	ALL	1ST	12121319
367109.97000	3792214.86000	1.71153	292.02	292.02	0.00	1-HR	ALL	1ST	9082519
367135.60000	3792208.86000	1.59442	292.29	292.29	0.00	1-HR	ALL	1ST	8022618
367145.41000	3792251.39000	1.41609	292.87	292.87	0.00	1-HR	ALL	1ST	9082519
367073.98000	3792269.38000	1.24173	292.52	292.52	0.00	1-HR	ALL	1ST	12101518
366953.47000	3792101.98000	0.91221	289.87	289.87	0.00	1-HR	ALL	1ST	11102719
366856.96000	3792020.19000	1.01223	288.58	288.58	0.00	1-HR	ALL	1ST	8093019
366787.17000	3792100.22000	1.72496	289.41	289.41	0.00	1-HR	ALL	1ST	8092418
366505.70000	3792029.36000	0.82908	287.01	287.01	0.00	1-HR	ALL	1ST	10111218
366497.06000	3791828.21000	1.02816	283.83	283.83	0.00	1-HR	ALL	1ST	8022618
366374.82000	3791826.25000	1.27484	283.67	283.67	0.00	1-HR	ALL	1ST	10100517
366257.42000	3791647.90000	0.69933	279.85	279.85	0.00	1-HR	ALL	1ST	11102719
366223.02000	3791586.94000	0.82359	279.18	279.18	0.00	1-HR	ALL	1ST	12121017
366218.11000	3791478.88000	1.25532	278.01	278.01	0.00	1-HR	ALL	1ST	9093018
366207.45000	3791452.00000	1.27307	277.72	277.72	0.00	1-HR	ALL	1ST	8051118
366173.15000	3791439.02000	1.43941	277.57	277.57	0.00	1-HR	ALL	1ST	11090619
366159.24000	3791421.87000	1.31177	277.39	277.39	0.00	1-HR	ALL	1ST	12081719
366183.95000	3791300.40000	1.12037	277.00	277.00	0.00	1-HR	ALL	1ST	9010919
366274.16000	3791157.44000	0.55276	275.64	275.64	0.00	1-HR	ALL	1ST	8092419
366310.73000	3791083.02000	0.75316	275.44	275.44	0.00	1-HR	ALL	1ST	8100719

** CONCUNIT ug/m^3
** DEPUNIT g/m^2

APPENDIX G

AERMOD Model Diesel PM10 Printouts for Pits Area

```
**
****************************************
**
** AERMOD Input Produced by:
** AERMOD View Ver. 8.7.0
** Lakes Environmental Software Inc.
** Date: 9/25/2014
** File: C:\Vista Env\2013\13001 Pacoima\AERMOD\Pit PM10\Pit PM10.ADI
**
****************************************
**
**
****************************************
** AERMOD Control Pathway
****************************************
**
**
CO STARTING
   TITLEONE Pacoima Spreading Grounds Improvement Project
   TITLETWO I-5 to Sheldon and Cal-Mat Pits Area - PM10 Diesel Emissions
   MODELOPT DFAULT CONC
   AVERTIME 1 ANNUAL
   URBANOPT 9682049 Los_Angeles_County
   POLLUTID PM_10
   RUNORNOT RUN
   ERRORFIL "Pit PM10.err"
CO FINISHED
**
****************************************
** AERMOD Source Pathway
****************************************
**
**
SO STARTING
** Source Location **
** Source ID - Type - X Coord. - Y Coord. **
** ------------------------------------------------------------------
** Line Source Represented by Separated Volume Sources
** LINE VOLUME Source ID = RDOFFSITE
** DESCRSRC Offsite haul trucks
** PREFIX
** Length of Side = 12.19
** Configuration = Separated
** Emission Rate = 8.625E-06
** Vertical Dimension = 1.83
** SZINIT = 0.85
** Nodes = 8
** 370960.473, 3788559.476, 256.69, 1.83, 11.31
** 370925.715, 3788532.618, 255.88, 1.83, 11.31
** 370717.956, 3788772.764, 257.02, 1.83, 11.31
** 371023.330, 3789030.263, 262.93, 1.83, 11.31
** 371650.691, 3789568.683, 272.76, 1.83, 11.31
** 372565.262, 3790347.088, 280.83, 1.83, 11.31
** 372834.045, 3790579.807, 285.90, 1.83, 11.31
** 372722.382, 3790746.185, 288.95, 1.83, 11.31
** ------------------------------------------------------------------
   LOCATION L0000001     VOLUME   370955.649 3788555.749 256.58
   LOCATION L0000002     VOLUME   370936.402 3788540.876 256.13
   LOCATION L0000003     VOLUME   370918.637 3788540.799 255.92
   LOCATION L0000004     VOLUME   370902.723 3788559.194 256.01
   LOCATION L0000005     VOLUME   370886.809 3788577.589 256.09
   LOCATION L0000006     VOLUME   370870.895 3788595.984 256.18
   LOCATION L0000007     VOLUME   370854.981 3788614.379 256.27
   LOCATION L0000008     VOLUME   370839.066 3788632.774 256.36
   LOCATION L0000009     VOLUME   370823.152 3788651.169 256.44
   LOCATION L0000010     VOLUME   370807.238 3788669.564 256.53
   LOCATION L0000011     VOLUME   370791.324 3788687.959 256.62
   LOCATION L0000012     VOLUME   370775.410 3788706.354 256.70
   LOCATION L0000013     VOLUME   370759.495 3788724.749 256.79
   LOCATION L0000014     VOLUME   370743.581 3788743.145 256.88
   LOCATION L0000015     VOLUME   370727.667 3788761.540 256.97
   LOCATION L0000016     VOLUME   370725.205 3788778.876 257.16
   LOCATION L0000017     VOLUME   370743.800 3788794.556 257.52
   LOCATION L0000018     VOLUME   370762.395 3788810.236 257.88
   LOCATION L0000019     VOLUME   370780.990 3788825.916 258.24
   LOCATION L0000020     VOLUME   370799.585 3788841.596 258.60
   LOCATION L0000021     VOLUME   370818.181 3788857.276 258.96
   LOCATION L0000022     VOLUME   370836.776 3788872.956 259.32
   LOCATION L0000023     VOLUME   370855.371 3788888.636 259.68
   LOCATION L0000024     VOLUME   370873.966 3788904.316 260.04
   LOCATION L0000025     VOLUME   370892.561 3788919.996 260.40
```

LOCATION	L0000026	VOLUME	370911.157	3788935.675	260.76
LOCATION	L0000027	VOLUME	370929.752	3788951.355	261.12
LOCATION	L0000028	VOLUME	370948.347	3788967.035	261.48
LOCATION	L0000029	VOLUME	370966.942	3788982.715	261.84
LOCATION	L0000030	VOLUME	370985.537	3788998.395	262.20
LOCATION	L0000031	VOLUME	371004.132	3789014.075	262.56
LOCATION	L0000032	VOLUME	371022.728	3789029.755	262.92
LOCATION	L0000033	VOLUME	371041.190	3789045.591	263.21
LOCATION	L0000034	VOLUME	371059.648	3789061.432	263.50
LOCATION	L0000035	VOLUME	371078.106	3789077.273	263.79
LOCATION	L0000036	VOLUME	371096.564	3789093.114	264.08
LOCATION	L0000037	VOLUME	371115.022	3789108.956	264.37
LOCATION	L0000038	VOLUME	371133.480	3789124.797	264.66
LOCATION	L0000039	VOLUME	371151.938	3789140.638	264.95
LOCATION	L0000040	VOLUME	371170.396	3789156.479	265.23
LOCATION	L0000041	VOLUME	371188.854	3789172.320	265.52
LOCATION	L0000042	VOLUME	371207.312	3789188.162	265.81
LOCATION	L0000043	VOLUME	371225.770	3789204.003	266.10
LOCATION	L0000044	VOLUME	371244.228	3789219.844	266.39
LOCATION	L0000045	VOLUME	371262.686	3789235.685	266.68
LOCATION	L0000046	VOLUME	371281.144	3789251.526	266.97
LOCATION	L0000047	VOLUME	371299.602	3789267.367	267.26
LOCATION	L0000048	VOLUME	371318.060	3789283.209	267.55
LOCATION	L0000049	VOLUME	371336.518	3789299.050	267.84
LOCATION	L0000050	VOLUME	371354.976	3789314.891	268.13
LOCATION	L0000051	VOLUME	371373.434	3789330.732	268.42
LOCATION	L0000052	VOLUME	371391.892	3789346.573	268.70
LOCATION	L0000053	VOLUME	371410.350	3789362.415	268.99
LOCATION	L0000054	VOLUME	371428.808	3789378.256	269.28
LOCATION	L0000055	VOLUME	371447.266	3789394.097	269.57
LOCATION	L0000056	VOLUME	371465.724	3789409.938	269.86
LOCATION	L0000057	VOLUME	371484.182	3789425.779	270.15
LOCATION	L0000058	VOLUME	371502.639	3789441.620	270.44
LOCATION	L0000059	VOLUME	371521.097	3789457.462	270.73
LOCATION	L0000060	VOLUME	371539.555	3789473.303	271.02
LOCATION	L0000061	VOLUME	371558.013	3789489.144	271.31
LOCATION	L0000062	VOLUME	371576.471	3789504.985	271.60
LOCATION	L0000063	VOLUME	371594.929	3789520.826	271.89
LOCATION	L0000064	VOLUME	371613.387	3789536.668	272.18
LOCATION	L0000065	VOLUME	371631.845	3789552.509	272.46
LOCATION	L0000066	VOLUME	371650.303	3789568.350	272.75
LOCATION	L0000067	VOLUME	371668.825	3789584.117	272.92
LOCATION	L0000068	VOLUME	371687.348	3789599.882	273.08
LOCATION	L0000069	VOLUME	371705.871	3789615.647	273.25
LOCATION	L0000070	VOLUME	371724.394	3789631.412	273.41
LOCATION	L0000071	VOLUME	371742.917	3789647.177	273.57
LOCATION	L0000072	VOLUME	371761.440	3789662.942	273.74
LOCATION	L0000073	VOLUME	371779.963	3789678.708	273.90
LOCATION	L0000074	VOLUME	371798.486	3789694.473	274.06
LOCATION	L0000075	VOLUME	371817.009	3789710.238	274.23
LOCATION	L0000076	VOLUME	371835.531	3789726.003	274.39
LOCATION	L0000077	VOLUME	371854.054	3789741.768	274.55
LOCATION	L0000078	VOLUME	371872.577	3789757.533	274.72
LOCATION	L0000079	VOLUME	371891.100	3789773.299	274.88
LOCATION	L0000080	VOLUME	371909.623	3789789.064	275.04
LOCATION	L0000081	VOLUME	371928.146	3789804.829	275.21
LOCATION	L0000082	VOLUME	371946.669	3789820.594	275.37
LOCATION	L0000083	VOLUME	371965.192	3789836.359	275.54
LOCATION	L0000084	VOLUME	371983.715	3789852.124	275.70
LOCATION	L0000085	VOLUME	372002.238	3789867.890	275.86
LOCATION	L0000086	VOLUME	372020.761	3789883.655	276.03
LOCATION	L0000087	VOLUME	372039.284	3789899.420	276.19
LOCATION	L0000088	VOLUME	372057.807	3789915.185	276.35
LOCATION	L0000089	VOLUME	372076.330	3789930.950	276.52
LOCATION	L0000090	VOLUME	372094.853	3789946.715	276.68
LOCATION	L0000091	VOLUME	372113.376	3789962.481	276.84
LOCATION	L0000092	VOLUME	372131.899	3789978.246	277.01
LOCATION	L0000093	VOLUME	372150.422	3789994.011	277.17
LOCATION	L0000094	VOLUME	372168.945	3790009.776	277.33
LOCATION	L0000095	VOLUME	372187.467	3790025.541	277.50
LOCATION	L0000096	VOLUME	372205.990	3790041.306	277.66
LOCATION	L0000097	VOLUME	372224.513	3790057.072	277.82
LOCATION	L0000098	VOLUME	372243.036	3790072.837	277.99
LOCATION	L0000099	VOLUME	372261.559	3790088.602	278.15
LOCATION	L0000100	VOLUME	372280.082	3790104.367	278.31
LOCATION	L0000101	VOLUME	372298.605	3790120.132	278.48
LOCATION	L0000102	VOLUME	372317.128	3790135.897	278.64
LOCATION	L0000103	VOLUME	372335.651	3790151.663	278.80
LOCATION	L0000104	VOLUME	372354.174	3790167.428	278.97
LOCATION	L0000105	VOLUME	372372.697	3790183.193	279.13
LOCATION	L0000106	VOLUME	372391.220	3790198.958	279.29

```
   LOCATION L0000107     VOLUME   372409.743 3790214.723 279.46
   LOCATION L0000108     VOLUME   372428.266 3790230.488 279.62
   LOCATION L0000109     VOLUME   372446.789 3790246.254 279.78
   LOCATION L0000110     VOLUME   372465.312 3790262.019 279.95
   LOCATION L0000111     VOLUME   372483.835 3790277.784 280.11
   LOCATION L0000112     VOLUME   372502.358 3790293.549 280.27
   LOCATION L0000113     VOLUME   372520.881 3790309.314 280.44
   LOCATION L0000114     VOLUME   372539.404 3790325.079 280.60
   LOCATION L0000115     VOLUME   372557.926 3790340.845 280.77
   LOCATION L0000116     VOLUME   372576.368 3790356.704 281.04
   LOCATION L0000117     VOLUME   372594.757 3790372.626 281.39
   LOCATION L0000118     VOLUME   372613.146 3790388.547 281.73
   LOCATION L0000119     VOLUME   372631.535 3790404.469 282.08
   LOCATION L0000120     VOLUME   372649.924 3790420.390 282.43
   LOCATION L0000121     VOLUME   372668.312 3790436.311 282.77
   LOCATION L0000122     VOLUME   372686.701 3790452.233 283.12
   LOCATION L0000123     VOLUME   372705.090 3790468.154 283.47
   LOCATION L0000124     VOLUME   372723.479 3790484.076 283.81
   LOCATION L0000125     VOLUME   372741.867 3790499.997 284.16
   LOCATION L0000126     VOLUME   372760.256 3790515.919 284.51
   LOCATION L0000127     VOLUME   372778.645 3790531.840 284.85
   LOCATION L0000128     VOLUME   372797.034 3790547.762 285.20
   LOCATION L0000129     VOLUME   372815.423 3790563.683 285.55
   LOCATION L0000130     VOLUME   372833.811 3790579.605 285.90
   LOCATION L0000131     VOLUME   372820.663 3790599.747 286.27
   LOCATION L0000132     VOLUME   372807.108 3790619.944 286.64
   LOCATION L0000133     VOLUME   372793.553 3790640.140 287.01
   LOCATION L0000134     VOLUME   372779.999 3790660.337 287.38
   LOCATION L0000135     VOLUME   372766.444 3790680.534 287.75
   LOCATION L0000136     VOLUME   372752.889 3790700.730 288.12
   LOCATION L0000137     VOLUME   372739.334 3790720.927 288.49
   LOCATION L0000138     VOLUME   372725.779 3790741.124 288.86
** End of LINE VOLUME Source ID = RDOFFSITE
   LOCATION IDLESHEL     POINT      372629.700  3790720.500      288.550
** DESCRSRC Haul truck idling at Sheldon Pit
   LOCATION IDLECAL      POINT      373018.290  3790188.990      284.570
** DESCRSRC Haul trucks Idling at Cal-Mat Pit
** Source Parameters **
** LINE VOLUME Source ID = RDOFFSITE
   SRCPARAM L0000001     0.0000000625      1.83     11.31      0.85
   SRCPARAM L0000002     0.0000000625      1.83     11.31      0.85
   SRCPARAM L0000003     0.0000000625      1.83     11.31      0.85
   SRCPARAM L0000004     0.0000000625      1.83     11.31      0.85
   SRCPARAM L0000005     0.0000000625      1.83     11.31      0.85
   SRCPARAM L0000006     0.0000000625      1.83     11.31      0.85
   SRCPARAM L0000007     0.0000000625      1.83     11.31      0.85
   SRCPARAM L0000008     0.0000000625      1.83     11.31      0.85
   SRCPARAM L0000009     0.0000000625      1.83     11.31      0.85
   SRCPARAM L0000010     0.0000000625      1.83     11.31      0.85
   SRCPARAM L0000011     0.0000000625      1.83     11.31      0.85
   SRCPARAM L0000012     0.0000000625      1.83     11.31      0.85
   SRCPARAM L0000013     0.0000000625      1.83     11.31      0.85
   SRCPARAM L0000014     0.0000000625      1.83     11.31      0.85
   SRCPARAM L0000015     0.0000000625      1.83     11.31      0.85
   SRCPARAM L0000016     0.0000000625      1.83     11.31      0.85
   SRCPARAM L0000017     0.0000000625      1.83     11.31      0.85
   SRCPARAM L0000018     0.0000000625      1.83     11.31      0.85
   SRCPARAM L0000019     0.0000000625      1.83     11.31      0.85
   SRCPARAM L0000020     0.0000000625      1.83     11.31      0.85
   SRCPARAM L0000021     0.0000000625      1.83     11.31      0.85
   SRCPARAM L0000022     0.0000000625      1.83     11.31      0.85
   SRCPARAM L0000023     0.0000000625      1.83     11.31      0.85
   SRCPARAM L0000024     0.0000000625      1.83     11.31      0.85
   SRCPARAM L0000025     0.0000000625      1.83     11.31      0.85
   SRCPARAM L0000026     0.0000000625      1.83     11.31      0.85
   SRCPARAM L0000027     0.0000000625      1.83     11.31      0.85
   SRCPARAM L0000028     0.0000000625      1.83     11.31      0.85
   SRCPARAM L0000029     0.0000000625      1.83     11.31      0.85
   SRCPARAM L0000030     0.0000000625      1.83     11.31      0.85
   SRCPARAM L0000031     0.0000000625      1.83     11.31      0.85
   SRCPARAM L0000032     0.0000000625      1.83     11.31      0.85
   SRCPARAM L0000033     0.0000000625      1.83     11.31      0.85
   SRCPARAM L0000034     0.0000000625      1.83     11.31      0.85
   SRCPARAM L0000035     0.0000000625      1.83     11.31      0.85
   SRCPARAM L0000036     0.0000000625      1.83     11.31      0.85
   SRCPARAM L0000037     0.0000000625      1.83     11.31      0.85
   SRCPARAM L0000038     0.0000000625      1.83     11.31      0.85
   SRCPARAM L0000039     0.0000000625      1.83     11.31      0.85
   SRCPARAM L0000040     0.0000000625      1.83     11.31      0.85
   SRCPARAM L0000041     0.0000000625      1.83     11.31      0.85
   SRCPARAM L0000042     0.0000000625      1.83     11.31      0.85
```

SRCPARAM	L0000043	0.0000000625	1.83	11.31	0.85
SRCPARAM	L0000044	0.0000000625	1.83	11.31	0.85
SRCPARAM	L0000045	0.0000000625	1.83	11.31	0.85
SRCPARAM	L0000046	0.0000000625	1.83	11.31	0.85
SRCPARAM	L0000047	0.0000000625	1.83	11.31	0.85
SRCPARAM	L0000048	0.0000000625	1.83	11.31	0.85
SRCPARAM	L0000049	0.0000000625	1.83	11.31	0.85
SRCPARAM	L0000050	0.0000000625	1.83	11.31	0.85
SRCPARAM	L0000051	0.0000000625	1.83	11.31	0.85
SRCPARAM	L0000052	0.0000000625	1.83	11.31	0.85
SRCPARAM	L0000053	0.0000000625	1.83	11.31	0.85
SRCPARAM	L0000054	0.0000000625	1.83	11.31	0.85
SRCPARAM	L0000055	0.0000000625	1.83	11.31	0.85
SRCPARAM	L0000056	0.0000000625	1.83	11.31	0.85
SRCPARAM	L0000057	0.0000000625	1.83	11.31	0.85
SRCPARAM	L0000058	0.0000000625	1.83	11.31	0.85
SRCPARAM	L0000059	0.0000000625	1.83	11.31	0.85
SRCPARAM	L0000060	0.0000000625	1.83	11.31	0.85
SRCPARAM	L0000061	0.0000000625	1.83	11.31	0.85
SRCPARAM	L0000062	0.0000000625	1.83	11.31	0.85
SRCPARAM	L0000063	0.0000000625	1.83	11.31	0.85
SRCPARAM	L0000064	0.0000000625	1.83	11.31	0.85
SRCPARAM	L0000065	0.0000000625	1.83	11.31	0.85
SRCPARAM	L0000066	0.0000000625	1.83	11.31	0.85
SRCPARAM	L0000067	0.0000000625	1.83	11.31	0.85
SRCPARAM	L0000068	0.0000000625	1.83	11.31	0.85
SRCPARAM	L0000069	0.0000000625	1.83	11.31	0.85
SRCPARAM	L0000070	0.0000000625	1.83	11.31	0.85
SRCPARAM	L0000071	0.0000000625	1.83	11.31	0.85
SRCPARAM	L0000072	0.0000000625	1.83	11.31	0.85
SRCPARAM	L0000073	0.0000000625	1.83	11.31	0.85
SRCPARAM	L0000074	0.0000000625	1.83	11.31	0.85
SRCPARAM	L0000075	0.0000000625	1.83	11.31	0.85
SRCPARAM	L0000076	0.0000000625	1.83	11.31	0.85
SRCPARAM	L0000077	0.0000000625	1.83	11.31	0.85
SRCPARAM	L0000078	0.0000000625	1.83	11.31	0.85
SRCPARAM	L0000079	0.0000000625	1.83	11.31	0.85
SRCPARAM	L0000080	0.0000000625	1.83	11.31	0.85
SRCPARAM	L0000081	0.0000000625	1.83	11.31	0.85
SRCPARAM	L0000082	0.0000000625	1.83	11.31	0.85
SRCPARAM	L0000083	0.0000000625	1.83	11.31	0.85
SRCPARAM	L0000084	0.0000000625	1.83	11.31	0.85
SRCPARAM	L0000085	0.0000000625	1.83	11.31	0.85
SRCPARAM	L0000086	0.0000000625	1.83	11.31	0.85
SRCPARAM	L0000087	0.0000000625	1.83	11.31	0.85
SRCPARAM	L0000088	0.0000000625	1.83	11.31	0.85
SRCPARAM	L0000089	0.0000000625	1.83	11.31	0.85
SRCPARAM	L0000090	0.0000000625	1.83	11.31	0.85
SRCPARAM	L0000091	0.0000000625	1.83	11.31	0.85
SRCPARAM	L0000092	0.0000000625	1.83	11.31	0.85
SRCPARAM	L0000093	0.0000000625	1.83	11.31	0.85
SRCPARAM	L0000094	0.0000000625	1.83	11.31	0.85
SRCPARAM	L0000095	0.0000000625	1.83	11.31	0.85
SRCPARAM	L0000096	0.0000000625	1.83	11.31	0.85
SRCPARAM	L0000097	0.0000000625	1.83	11.31	0.85
SRCPARAM	L0000098	0.0000000625	1.83	11.31	0.85
SRCPARAM	L0000099	0.0000000625	1.83	11.31	0.85
SRCPARAM	L0000100	0.0000000625	1.83	11.31	0.85
SRCPARAM	L0000101	0.0000000625	1.83	11.31	0.85
SRCPARAM	L0000102	0.0000000625	1.83	11.31	0.85
SRCPARAM	L0000103	0.0000000625	1.83	11.31	0.85
SRCPARAM	L0000104	0.0000000625	1.83	11.31	0.85
SRCPARAM	L0000105	0.0000000625	1.83	11.31	0.85
SRCPARAM	L0000106	0.0000000625	1.83	11.31	0.85
SRCPARAM	L0000107	0.0000000625	1.83	11.31	0.85
SRCPARAM	L0000108	0.0000000625	1.83	11.31	0.85
SRCPARAM	L0000109	0.0000000625	1.83	11.31	0.85
SRCPARAM	L0000110	0.0000000625	1.83	11.31	0.85
SRCPARAM	L0000111	0.0000000625	1.83	11.31	0.85
SRCPARAM	L0000112	0.0000000625	1.83	11.31	0.85
SRCPARAM	L0000113	0.0000000625	1.83	11.31	0.85
SRCPARAM	L0000114	0.0000000625	1.83	11.31	0.85
SRCPARAM	L0000115	0.0000000625	1.83	11.31	0.85
SRCPARAM	L0000116	0.0000000625	1.83	11.31	0.85
SRCPARAM	L0000117	0.0000000625	1.83	11.31	0.85
SRCPARAM	L0000118	0.0000000625	1.83	11.31	0.85
SRCPARAM	L0000119	0.0000000625	1.83	11.31	0.85
SRCPARAM	L0000120	0.0000000625	1.83	11.31	0.85
SRCPARAM	L0000121	0.0000000625	1.83	11.31	0.85
SRCPARAM	L0000122	0.0000000625	1.83	11.31	0.85
SRCPARAM	L0000123	0.0000000625	1.83	11.31	0.85

```
   SRCPARAM L0000124     0.0000000625      1.83     11.31      0.85
   SRCPARAM L0000125     0.0000000625      1.83     11.31      0.85
   SRCPARAM L0000126     0.0000000625      1.83     11.31      0.85
   SRCPARAM L0000127     0.0000000625      1.83     11.31      0.85
   SRCPARAM L0000128     0.0000000625      1.83     11.31      0.85
   SRCPARAM L0000129     0.0000000625      1.83     11.31      0.85
   SRCPARAM L0000130     0.0000000625      1.83     11.31      0.85
   SRCPARAM L0000131     0.0000000625      1.83     11.31      0.85
   SRCPARAM L0000132     0.0000000625      1.83     11.31      0.85
   SRCPARAM L0000133     0.0000000625      1.83     11.31      0.85
   SRCPARAM L0000134     0.0000000625      1.83     11.31      0.85
   SRCPARAM L0000135     0.0000000625      1.83     11.31      0.85
   SRCPARAM L0000136     0.0000000625      1.83     11.31      0.85
   SRCPARAM L0000137     0.0000000625      1.83     11.31      0.85
   SRCPARAM L0000138     0.0000000625      1.83     11.31      0.85
** ----------------------------------------------------------------------
   SRCPARAM IDLESHEL     0.00005625     3.840   366.000  51.71000     0.100
   SRCPARAM IDLECAL      0.00005625     3.840   366.000  51.71000     0.100
   URBANSRC ALL

** Variable Emissions Type: "By Hour-of-Day (HROFDY)"
** Variable Emission Scenario: "Scenario 2"
   EMISFACT L0000001     HROFDY 0.0 0.0 0.0 0.0 0.0 0.0
   EMISFACT L0000001     HROFDY 0.0 1.0 1.0 1.0 1.0 1.0
   EMISFACT L0000001     HROFDY 1.0 1.0 1.0 1.0 1.0 1.0
   EMISFACT L0000001     HROFDY 1.0 0.0 0.0 0.0 0.0 0.0
   EMISFACT L0000002     HROFDY 0.0 0.0 0.0 0.0 0.0 0.0
   EMISFACT L0000002     HROFDY 0.0 1.0 1.0 1.0 1.0 1.0
   EMISFACT L0000002     HROFDY 1.0 1.0 1.0 1.0 1.0 1.0
   EMISFACT L0000002     HROFDY 1.0 0.0 0.0 0.0 0.0 0.0
   EMISFACT L0000003     HROFDY 0.0 0.0 0.0 0.0 0.0 0.0
   EMISFACT L0000003     HROFDY 0.0 1.0 1.0 1.0 1.0 1.0
   EMISFACT L0000003     HROFDY 1.0 1.0 1.0 1.0 1.0 1.0
   EMISFACT L0000003     HROFDY 1.0 0.0 0.0 0.0 0.0 0.0
   EMISFACT L0000004     HROFDY 0.0 0.0 0.0 0.0 0.0 0.0
   EMISFACT L0000004     HROFDY 0.0 1.0 1.0 1.0 1.0 1.0
   EMISFACT L0000004     HROFDY 1.0 1.0 1.0 1.0 1.0 1.0
   EMISFACT L0000004     HROFDY 1.0 0.0 0.0 0.0 0.0 0.0
   EMISFACT L0000005     HROFDY 0.0 0.0 0.0 0.0 0.0 0.0
   EMISFACT L0000005     HROFDY 0.0 1.0 1.0 1.0 1.0 1.0
   EMISFACT L0000005     HROFDY 1.0 1.0 1.0 1.0 1.0 1.0
   EMISFACT L0000005     HROFDY 1.0 0.0 0.0 0.0 0.0 0.0
   EMISFACT L0000006     HROFDY 0.0 0.0 0.0 0.0 0.0 0.0
   EMISFACT L0000006     HROFDY 0.0 1.0 1.0 1.0 1.0 1.0
   EMISFACT L0000006     HROFDY 1.0 1.0 1.0 1.0 1.0 1.0
   EMISFACT L0000006     HROFDY 1.0 0.0 0.0 0.0 0.0 0.0
   EMISFACT L0000007     HROFDY 0.0 0.0 0.0 0.0 0.0 0.0
   EMISFACT L0000007     HROFDY 0.0 1.0 1.0 1.0 1.0 1.0
   EMISFACT L0000007     HROFDY 1.0 1.0 1.0 1.0 1.0 1.0
   EMISFACT L0000007     HROFDY 1.0 0.0 0.0 0.0 0.0 0.0
   EMISFACT L0000008     HROFDY 0.0 0.0 0.0 0.0 0.0 0.0
   EMISFACT L0000008     HROFDY 0.0 1.0 1.0 1.0 1.0 1.0
   EMISFACT L0000008     HROFDY 1.0 1.0 1.0 1.0 1.0 1.0
   EMISFACT L0000008     HROFDY 1.0 0.0 0.0 0.0 0.0 0.0
   EMISFACT L0000009     HROFDY 0.0 0.0 0.0 0.0 0.0 0.0
   EMISFACT L0000009     HROFDY 0.0 1.0 1.0 1.0 1.0 1.0
   EMISFACT L0000009     HROFDY 1.0 1.0 1.0 1.0 1.0 1.0
   EMISFACT L0000009     HROFDY 1.0 0.0 0.0 0.0 0.0 0.0
   EMISFACT L0000010     HROFDY 0.0 0.0 0.0 0.0 0.0 0.0
   EMISFACT L0000010     HROFDY 0.0 1.0 1.0 1.0 1.0 1.0
   EMISFACT L0000010     HROFDY 1.0 1.0 1.0 1.0 1.0 1.0
   EMISFACT L0000010     HROFDY 1.0 0.0 0.0 0.0 0.0 0.0
   EMISFACT L0000011     HROFDY 0.0 0.0 0.0 0.0 0.0 0.0
   EMISFACT L0000011     HROFDY 0.0 1.0 1.0 1.0 1.0 1.0
   EMISFACT L0000011     HROFDY 1.0 1.0 1.0 1.0 1.0 1.0
   EMISFACT L0000011     HROFDY 1.0 0.0 0.0 0.0 0.0 0.0
   EMISFACT L0000012     HROFDY 0.0 0.0 0.0 0.0 0.0 0.0
   EMISFACT L0000012     HROFDY 0.0 1.0 1.0 1.0 1.0 1.0
   EMISFACT L0000012     HROFDY 1.0 1.0 1.0 1.0 1.0 1.0
   EMISFACT L0000012     HROFDY 1.0 0.0 0.0 0.0 0.0 0.0
   EMISFACT L0000013     HROFDY 0.0 0.0 0.0 0.0 0.0 0.0
   EMISFACT L0000013     HROFDY 0.0 1.0 1.0 1.0 1.0 1.0
   EMISFACT L0000013     HROFDY 1.0 1.0 1.0 1.0 1.0 1.0
   EMISFACT L0000013     HROFDY 1.0 0.0 0.0 0.0 0.0 0.0
   EMISFACT L0000014     HROFDY 0.0 0.0 0.0 0.0 0.0 0.0
   EMISFACT L0000014     HROFDY 0.0 1.0 1.0 1.0 1.0 1.0
   EMISFACT L0000014     HROFDY 1.0 1.0 1.0 1.0 1.0 1.0
   EMISFACT L0000014     HROFDY 1.0 0.0 0.0 0.0 0.0 0.0
   EMISFACT L0000015     HROFDY 0.0 0.0 0.0 0.0 0.0 0.0
   EMISFACT L0000015     HROFDY 0.0 1.0 1.0 1.0 1.0 1.0
   EMISFACT L0000015     HROFDY 1.0 1.0 1.0 1.0 1.0 1.0
```

```
EMISFACT L0000015     HROFDY 1.0 0.0 0.0 0.0 0.0 0.0
EMISFACT L0000016     HROFDY 0.0 0.0 0.0 0.0 0.0 0.0
EMISFACT L0000016     HROFDY 0.0 1.0 1.0 1.0 1.0 1.0
EMISFACT L0000016     HROFDY 1.0 1.0 1.0 1.0 1.0 1.0
EMISFACT L0000016     HROFDY 1.0 0.0 0.0 0.0 0.0 0.0
EMISFACT L0000017     HROFDY 0.0 0.0 0.0 0.0 0.0 0.0
EMISFACT L0000017     HROFDY 0.0 1.0 1.0 1.0 1.0 1.0
EMISFACT L0000017     HROFDY 1.0 1.0 1.0 1.0 1.0 1.0
EMISFACT L0000017     HROFDY 1.0 0.0 0.0 0.0 0.0 0.0
EMISFACT L0000018     HROFDY 0.0 0.0 0.0 0.0 0.0 0.0
EMISFACT L0000018     HROFDY 0.0 1.0 1.0 1.0 1.0 1.0
EMISFACT L0000018     HROFDY 1.0 1.0 1.0 1.0 1.0 1.0
EMISFACT L0000018     HROFDY 1.0 0.0 0.0 0.0 0.0 0.0
EMISFACT L0000019     HROFDY 0.0 0.0 0.0 0.0 0.0 0.0
EMISFACT L0000019     HROFDY 0.0 1.0 1.0 1.0 1.0 1.0
EMISFACT L0000019     HROFDY 1.0 1.0 1.0 1.0 1.0 1.0
EMISFACT L0000019     HROFDY 1.0 0.0 0.0 0.0 0.0 0.0
EMISFACT L0000020     HROFDY 0.0 0.0 0.0 0.0 0.0 0.0
EMISFACT L0000020     HROFDY 0.0 1.0 1.0 1.0 1.0 1.0
EMISFACT L0000020     HROFDY 1.0 1.0 1.0 1.0 1.0 1.0
EMISFACT L0000020     HROFDY 1.0 0.0 0.0 0.0 0.0 0.0
EMISFACT L0000021     HROFDY 0.0 0.0 0.0 0.0 0.0 0.0
EMISFACT L0000021     HROFDY 0.0 1.0 1.0 1.0 1.0 1.0
EMISFACT L0000021     HROFDY 1.0 1.0 1.0 1.0 1.0 1.0
EMISFACT L0000021     HROFDY 1.0 0.0 0.0 0.0 0.0 0.0
EMISFACT L0000022     HROFDY 0.0 0.0 0.0 0.0 0.0 0.0
EMISFACT L0000022     HROFDY 0.0 1.0 1.0 1.0 1.0 1.0
EMISFACT L0000022     HROFDY 1.0 1.0 1.0 1.0 1.0 1.0
EMISFACT L0000022     HROFDY 1.0 0.0 0.0 0.0 0.0 0.0
EMISFACT L0000023     HROFDY 0.0 0.0 0.0 0.0 0.0 0.0
EMISFACT L0000023     HROFDY 0.0 1.0 1.0 1.0 1.0 1.0
EMISFACT L0000023     HROFDY 1.0 1.0 1.0 1.0 1.0 1.0
EMISFACT L0000023     HROFDY 1.0 0.0 0.0 0.0 0.0 0.0
EMISFACT L0000024     HROFDY 0.0 0.0 0.0 0.0 0.0 0.0
EMISFACT L0000024     HROFDY 0.0 1.0 1.0 1.0 1.0 1.0
EMISFACT L0000024     HROFDY 1.0 1.0 1.0 1.0 1.0 1.0
EMISFACT L0000024     HROFDY 1.0 0.0 0.0 0.0 0.0 0.0
EMISFACT L0000025     HROFDY 0.0 0.0 0.0 0.0 0.0 0.0
EMISFACT L0000025     HROFDY 0.0 1.0 1.0 1.0 1.0 1.0
EMISFACT L0000025     HROFDY 1.0 1.0 1.0 1.0 1.0 1.0
EMISFACT L0000025     HROFDY 1.0 0.0 0.0 0.0 0.0 0.0
EMISFACT L0000026     HROFDY 0.0 0.0 0.0 0.0 0.0 0.0
EMISFACT L0000026     HROFDY 0.0 1.0 1.0 1.0 1.0 1.0
EMISFACT L0000026     HROFDY 1.0 1.0 1.0 1.0 1.0 1.0
EMISFACT L0000026     HROFDY 1.0 0.0 0.0 0.0 0.0 0.0
EMISFACT L0000027     HROFDY 0.0 0.0 0.0 0.0 0.0 0.0
EMISFACT L0000027     HROFDY 0.0 1.0 1.0 1.0 1.0 1.0
EMISFACT L0000027     HROFDY 1.0 1.0 1.0 1.0 1.0 1.0
EMISFACT L0000027     HROFDY 1.0 0.0 0.0 0.0 0.0 0.0
EMISFACT L0000028     HROFDY 0.0 0.0 0.0 0.0 0.0 0.0
EMISFACT L0000028     HROFDY 0.0 1.0 1.0 1.0 1.0 1.0
EMISFACT L0000028     HROFDY 1.0 1.0 1.0 1.0 1.0 1.0
EMISFACT L0000028     HROFDY 1.0 0.0 0.0 0.0 0.0 0.0
EMISFACT L0000029     HROFDY 0.0 0.0 0.0 0.0 0.0 0.0
EMISFACT L0000029     HROFDY 0.0 1.0 1.0 1.0 1.0 1.0
EMISFACT L0000029     HROFDY 1.0 1.0 1.0 1.0 1.0 1.0
EMISFACT L0000029     HROFDY 1.0 0.0 0.0 0.0 0.0 0.0
EMISFACT L0000030     HROFDY 0.0 0.0 0.0 0.0 0.0 0.0
EMISFACT L0000030     HROFDY 0.0 1.0 1.0 1.0 1.0 1.0
EMISFACT L0000030     HROFDY 1.0 1.0 1.0 1.0 1.0 1.0
EMISFACT L0000030     HROFDY 1.0 0.0 0.0 0.0 0.0 0.0
EMISFACT L0000031     HROFDY 0.0 0.0 0.0 0.0 0.0 0.0
EMISFACT L0000031     HROFDY 0.0 1.0 1.0 1.0 1.0 1.0
EMISFACT L0000031     HROFDY 1.0 1.0 1.0 1.0 1.0 1.0
EMISFACT L0000031     HROFDY 1.0 0.0 0.0 0.0 0.0 0.0
EMISFACT L0000032     HROFDY 0.0 0.0 0.0 0.0 0.0 0.0
EMISFACT L0000032     HROFDY 0.0 1.0 1.0 1.0 1.0 1.0
EMISFACT L0000032     HROFDY 1.0 1.0 1.0 1.0 1.0 1.0
EMISFACT L0000032     HROFDY 1.0 0.0 0.0 0.0 0.0 0.0
EMISFACT L0000033     HROFDY 0.0 0.0 0.0 0.0 0.0 0.0
EMISFACT L0000033     HROFDY 0.0 1.0 1.0 1.0 1.0 1.0
EMISFACT L0000033     HROFDY 1.0 1.0 1.0 1.0 1.0 1.0
EMISFACT L0000033     HROFDY 1.0 0.0 0.0 0.0 0.0 0.0
EMISFACT L0000034     HROFDY 0.0 0.0 0.0 0.0 0.0 0.0
EMISFACT L0000034     HROFDY 0.0 1.0 1.0 1.0 1.0 1.0
EMISFACT L0000034     HROFDY 1.0 1.0 1.0 1.0 1.0 1.0
EMISFACT L0000034     HROFDY 1.0 0.0 0.0 0.0 0.0 0.0
EMISFACT L0000035     HROFDY 0.0 0.0 0.0 0.0 0.0 0.0
EMISFACT L0000035     HROFDY 0.0 1.0 1.0 1.0 1.0 1.0
EMISFACT L0000035     HROFDY 1.0 1.0 1.0 1.0 1.0 1.0
EMISFACT L0000035     HROFDY 1.0 0.0 0.0 0.0 0.0 0.0
```

```
EMISFACT L0000036     HROFDY 0.0 0.0 0.0 0.0 0.0 0.0
EMISFACT L0000036     HROFDY 0.0 1.0 1.0 1.0 1.0 1.0
EMISFACT L0000036     HROFDY 1.0 1.0 1.0 1.0 1.0 1.0
EMISFACT L0000036     HROFDY 1.0 0.0 0.0 0.0 0.0 0.0
EMISFACT L0000037     HROFDY 0.0 0.0 0.0 0.0 0.0 0.0
EMISFACT L0000037     HROFDY 0.0 1.0 1.0 1.0 1.0 1.0
EMISFACT L0000037     HROFDY 1.0 1.0 1.0 1.0 1.0 1.0
EMISFACT L0000037     HROFDY 1.0 0.0 0.0 0.0 0.0 0.0
EMISFACT L0000038     HROFDY 0.0 0.0 0.0 0.0 0.0 0.0
EMISFACT L0000038     HROFDY 0.0 1.0 1.0 1.0 1.0 1.0
EMISFACT L0000038     HROFDY 1.0 1.0 1.0 1.0 1.0 1.0
EMISFACT L0000038     HROFDY 1.0 0.0 0.0 0.0 0.0 0.0
EMISFACT L0000039     HROFDY 0.0 0.0 0.0 0.0 0.0 0.0
EMISFACT L0000039     HROFDY 0.0 1.0 1.0 1.0 1.0 1.0
EMISFACT L0000039     HROFDY 1.0 1.0 1.0 1.0 1.0 1.0
EMISFACT L0000039     HROFDY 1.0 0.0 0.0 0.0 0.0 0.0
EMISFACT L0000040     HROFDY 0.0 0.0 0.0 0.0 0.0 0.0
EMISFACT L0000040     HROFDY 0.0 1.0 1.0 1.0 1.0 1.0
EMISFACT L0000040     HROFDY 1.0 1.0 1.0 1.0 1.0 1.0
EMISFACT L0000040     HROFDY 1.0 0.0 0.0 0.0 0.0 0.0
EMISFACT L0000041     HROFDY 0.0 0.0 0.0 0.0 0.0 0.0
EMISFACT L0000041     HROFDY 0.0 1.0 1.0 1.0 1.0 1.0
EMISFACT L0000041     HROFDY 1.0 1.0 1.0 1.0 1.0 1.0
EMISFACT L0000041     HROFDY 1.0 0.0 0.0 0.0 0.0 0.0
EMISFACT L0000042     HROFDY 0.0 0.0 0.0 0.0 0.0 0.0
EMISFACT L0000042     HROFDY 0.0 1.0 1.0 1.0 1.0 1.0
EMISFACT L0000042     HROFDY 1.0 1.0 1.0 1.0 1.0 1.0
EMISFACT L0000042     HROFDY 1.0 0.0 0.0 0.0 0.0 0.0
EMISFACT L0000043     HROFDY 0.0 0.0 0.0 0.0 0.0 0.0
EMISFACT L0000043     HROFDY 0.0 1.0 1.0 1.0 1.0 1.0
EMISFACT L0000043     HROFDY 1.0 1.0 1.0 1.0 1.0 1.0
EMISFACT L0000043     HROFDY 1.0 0.0 0.0 0.0 0.0 0.0
EMISFACT L0000044     HROFDY 0.0 0.0 0.0 0.0 0.0 0.0
EMISFACT L0000044     HROFDY 0.0 1.0 1.0 1.0 1.0 1.0
EMISFACT L0000044     HROFDY 1.0 1.0 1.0 1.0 1.0 1.0
EMISFACT L0000044     HROFDY 1.0 0.0 0.0 0.0 0.0 0.0
EMISFACT L0000045     HROFDY 0.0 0.0 0.0 0.0 0.0 0.0
EMISFACT L0000045     HROFDY 0.0 1.0 1.0 1.0 1.0 1.0
EMISFACT L0000045     HROFDY 1.0 1.0 1.0 1.0 1.0 1.0
EMISFACT L0000045     HROFDY 1.0 0.0 0.0 0.0 0.0 0.0
EMISFACT L0000046     HROFDY 0.0 0.0 0.0 0.0 0.0 0.0
EMISFACT L0000046     HROFDY 0.0 1.0 1.0 1.0 1.0 1.0
EMISFACT L0000046     HROFDY 1.0 1.0 1.0 1.0 1.0 1.0
EMISFACT L0000046     HROFDY 1.0 0.0 0.0 0.0 0.0 0.0
EMISFACT L0000047     HROFDY 0.0 0.0 0.0 0.0 0.0 0.0
EMISFACT L0000047     HROFDY 0.0 1.0 1.0 1.0 1.0 1.0
EMISFACT L0000047     HROFDY 1.0 1.0 1.0 1.0 1.0 1.0
EMISFACT L0000047     HROFDY 1.0 0.0 0.0 0.0 0.0 0.0
EMISFACT L0000048     HROFDY 0.0 0.0 0.0 0.0 0.0 0.0
EMISFACT L0000048     HROFDY 0.0 1.0 1.0 1.0 1.0 1.0
EMISFACT L0000048     HROFDY 1.0 1.0 1.0 1.0 1.0 1.0
EMISFACT L0000048     HROFDY 1.0 0.0 0.0 0.0 0.0 0.0
EMISFACT L0000049     HROFDY 0.0 0.0 0.0 0.0 0.0 0.0
EMISFACT L0000049     HROFDY 0.0 1.0 1.0 1.0 1.0 1.0
EMISFACT L0000049     HROFDY 1.0 1.0 1.0 1.0 1.0 1.0
EMISFACT L0000049     HROFDY 1.0 0.0 0.0 0.0 0.0 0.0
EMISFACT L0000050     HROFDY 0.0 0.0 0.0 0.0 0.0 0.0
EMISFACT L0000050     HROFDY 0.0 1.0 1.0 1.0 1.0 1.0
EMISFACT L0000050     HROFDY 1.0 1.0 1.0 1.0 1.0 1.0
EMISFACT L0000050     HROFDY 1.0 0.0 0.0 0.0 0.0 0.0
EMISFACT L0000051     HROFDY 0.0 0.0 0.0 0.0 0.0 0.0
EMISFACT L0000051     HROFDY 0.0 1.0 1.0 1.0 1.0 1.0
EMISFACT L0000051     HROFDY 1.0 1.0 1.0 1.0 1.0 1.0
EMISFACT L0000051     HROFDY 1.0 0.0 0.0 0.0 0.0 0.0
EMISFACT L0000052     HROFDY 0.0 0.0 0.0 0.0 0.0 0.0
EMISFACT L0000052     HROFDY 0.0 1.0 1.0 1.0 1.0 1.0
EMISFACT L0000052     HROFDY 1.0 1.0 1.0 1.0 1.0 1.0
EMISFACT L0000052     HROFDY 1.0 0.0 0.0 0.0 0.0 0.0
EMISFACT L0000053     HROFDY 0.0 0.0 0.0 0.0 0.0 0.0
EMISFACT L0000053     HROFDY 0.0 1.0 1.0 1.0 1.0 1.0
EMISFACT L0000053     HROFDY 1.0 1.0 1.0 1.0 1.0 1.0
EMISFACT L0000053     HROFDY 1.0 0.0 0.0 0.0 0.0 0.0
EMISFACT L0000054     HROFDY 0.0 0.0 0.0 0.0 0.0 0.0
EMISFACT L0000054     HROFDY 0.0 1.0 1.0 1.0 1.0 1.0
EMISFACT L0000054     HROFDY 1.0 1.0 1.0 1.0 1.0 1.0
EMISFACT L0000054     HROFDY 1.0 0.0 0.0 0.0 0.0 0.0
EMISFACT L0000055     HROFDY 0.0 0.0 0.0 0.0 0.0 0.0
EMISFACT L0000055     HROFDY 0.0 1.0 1.0 1.0 1.0 1.0
EMISFACT L0000055     HROFDY 1.0 1.0 1.0 1.0 1.0 1.0
EMISFACT L0000055     HROFDY 1.0 0.0 0.0 0.0 0.0 0.0
EMISFACT L0000056     HROFDY 0.0 0.0 0.0 0.0 0.0 0.0
```

```
EMISFACT L0000056     HROFDY 0.0 1.0 1.0 1.0 1.0 1.0
EMISFACT L0000056     HROFDY 1.0 1.0 1.0 1.0 1.0 1.0
EMISFACT L0000056     HROFDY 1.0 0.0 0.0 0.0 0.0 0.0
EMISFACT L0000057     HROFDY 0.0 0.0 0.0 0.0 0.0 0.0
EMISFACT L0000057     HROFDY 0.0 1.0 1.0 1.0 1.0 1.0
EMISFACT L0000057     HROFDY 1.0 1.0 1.0 1.0 1.0 1.0
EMISFACT L0000057     HROFDY 1.0 0.0 0.0 0.0 0.0 0.0
EMISFACT L0000058     HROFDY 0.0 0.0 0.0 0.0 0.0 0.0
EMISFACT L0000058     HROFDY 0.0 1.0 1.0 1.0 1.0 1.0
EMISFACT L0000058     HROFDY 1.0 1.0 1.0 1.0 1.0 1.0
EMISFACT L0000058     HROFDY 1.0 0.0 0.0 0.0 0.0 0.0
EMISFACT L0000059     HROFDY 0.0 0.0 0.0 0.0 0.0 0.0
EMISFACT L0000059     HROFDY 0.0 1.0 1.0 1.0 1.0 1.0
EMISFACT L0000059     HROFDY 1.0 1.0 1.0 1.0 1.0 1.0
EMISFACT L0000059     HROFDY 1.0 0.0 0.0 0.0 0.0 0.0
EMISFACT L0000060     HROFDY 0.0 0.0 0.0 0.0 0.0 0.0
EMISFACT L0000060     HROFDY 0.0 1.0 1.0 1.0 1.0 1.0
EMISFACT L0000060     HROFDY 1.0 1.0 1.0 1.0 1.0 1.0
EMISFACT L0000060     HROFDY 1.0 0.0 0.0 0.0 0.0 0.0
EMISFACT L0000061     HROFDY 0.0 0.0 0.0 0.0 0.0 0.0
EMISFACT L0000061     HROFDY 0.0 1.0 1.0 1.0 1.0 1.0
EMISFACT L0000061     HROFDY 1.0 1.0 1.0 1.0 1.0 1.0
EMISFACT L0000061     HROFDY 1.0 0.0 0.0 0.0 0.0 0.0
EMISFACT L0000062     HROFDY 0.0 0.0 0.0 0.0 0.0 0.0
EMISFACT L0000062     HROFDY 0.0 1.0 1.0 1.0 1.0 1.0
EMISFACT L0000062     HROFDY 1.0 1.0 1.0 1.0 1.0 1.0
EMISFACT L0000062     HROFDY 1.0 0.0 0.0 0.0 0.0 0.0
EMISFACT L0000063     HROFDY 0.0 0.0 0.0 0.0 0.0 0.0
EMISFACT L0000063     HROFDY 0.0 1.0 1.0 1.0 1.0 1.0
EMISFACT L0000063     HROFDY 1.0 1.0 1.0 1.0 1.0 1.0
EMISFACT L0000063     HROFDY 1.0 0.0 0.0 0.0 0.0 0.0
EMISFACT L0000064     HROFDY 0.0 0.0 0.0 0.0 0.0 0.0
EMISFACT L0000064     HROFDY 0.0 1.0 1.0 1.0 1.0 1.0
EMISFACT L0000064     HROFDY 1.0 1.0 1.0 1.0 1.0 1.0
EMISFACT L0000064     HROFDY 1.0 0.0 0.0 0.0 0.0 0.0
EMISFACT L0000065     HROFDY 0.0 0.0 0.0 0.0 0.0 0.0
EMISFACT L0000065     HROFDY 0.0 1.0 1.0 1.0 1.0 1.0
EMISFACT L0000065     HROFDY 1.0 1.0 1.0 1.0 1.0 1.0
EMISFACT L0000065     HROFDY 1.0 0.0 0.0 0.0 0.0 0.0
EMISFACT L0000066     HROFDY 0.0 0.0 0.0 0.0 0.0 0.0
EMISFACT L0000066     HROFDY 0.0 1.0 1.0 1.0 1.0 1.0
EMISFACT L0000066     HROFDY 1.0 1.0 1.0 1.0 1.0 1.0
EMISFACT L0000066     HROFDY 1.0 0.0 0.0 0.0 0.0 0.0
EMISFACT L0000067     HROFDY 0.0 0.0 0.0 0.0 0.0 0.0
EMISFACT L0000067     HROFDY 0.0 1.0 1.0 1.0 1.0 1.0
EMISFACT L0000067     HROFDY 1.0 1.0 1.0 1.0 1.0 1.0
EMISFACT L0000067     HROFDY 1.0 0.0 0.0 0.0 0.0 0.0
EMISFACT L0000068     HROFDY 0.0 0.0 0.0 0.0 0.0 0.0
EMISFACT L0000068     HROFDY 0.0 1.0 1.0 1.0 1.0 1.0
EMISFACT L0000068     HROFDY 1.0 1.0 1.0 1.0 1.0 1.0
EMISFACT L0000068     HROFDY 1.0 0.0 0.0 0.0 0.0 0.0
EMISFACT L0000069     HROFDY 0.0 0.0 0.0 0.0 0.0 0.0
EMISFACT L0000069     HROFDY 0.0 1.0 1.0 1.0 1.0 1.0
EMISFACT L0000069     HROFDY 1.0 1.0 1.0 1.0 1.0 1.0
EMISFACT L0000069     HROFDY 1.0 0.0 0.0 0.0 0.0 0.0
EMISFACT L0000070     HROFDY 0.0 0.0 0.0 0.0 0.0 0.0
EMISFACT L0000070     HROFDY 0.0 1.0 1.0 1.0 1.0 1.0
EMISFACT L0000070     HROFDY 1.0 1.0 1.0 1.0 1.0 1.0
EMISFACT L0000070     HROFDY 1.0 0.0 0.0 0.0 0.0 0.0
EMISFACT L0000071     HROFDY 0.0 0.0 0.0 0.0 0.0 0.0
EMISFACT L0000071     HROFDY 0.0 1.0 1.0 1.0 1.0 1.0
EMISFACT L0000071     HROFDY 1.0 1.0 1.0 1.0 1.0 1.0
EMISFACT L0000071     HROFDY 1.0 0.0 0.0 0.0 0.0 0.0
EMISFACT L0000072     HROFDY 0.0 0.0 0.0 0.0 0.0 0.0
EMISFACT L0000072     HROFDY 0.0 1.0 1.0 1.0 1.0 1.0
EMISFACT L0000072     HROFDY 1.0 1.0 1.0 1.0 1.0 1.0
EMISFACT L0000072     HROFDY 1.0 0.0 0.0 0.0 0.0 0.0
EMISFACT L0000073     HROFDY 0.0 0.0 0.0 0.0 0.0 0.0
EMISFACT L0000073     HROFDY 0.0 1.0 1.0 1.0 1.0 1.0
EMISFACT L0000073     HROFDY 1.0 1.0 1.0 1.0 1.0 1.0
EMISFACT L0000073     HROFDY 1.0 0.0 0.0 0.0 0.0 0.0
EMISFACT L0000074     HROFDY 0.0 0.0 0.0 0.0 0.0 0.0
EMISFACT L0000074     HROFDY 0.0 1.0 1.0 1.0 1.0 1.0
EMISFACT L0000074     HROFDY 1.0 1.0 1.0 1.0 1.0 1.0
EMISFACT L0000074     HROFDY 1.0 0.0 0.0 0.0 0.0 0.0
EMISFACT L0000075     HROFDY 0.0 0.0 0.0 0.0 0.0 0.0
EMISFACT L0000075     HROFDY 0.0 1.0 1.0 1.0 1.0 1.0
EMISFACT L0000075     HROFDY 1.0 1.0 1.0 1.0 1.0 1.0
EMISFACT L0000075     HROFDY 1.0 0.0 0.0 0.0 0.0 0.0
EMISFACT L0000076     HROFDY 0.0 0.0 0.0 0.0 0.0 0.0
EMISFACT L0000076     HROFDY 0.0 1.0 1.0 1.0 1.0 1.0
```

```
EMISFACT L0000076     HROFDY 1.0 1.0 1.0 1.0 1.0 1.0
EMISFACT L0000076     HROFDY 1.0 0.0 0.0 0.0 0.0 0.0
EMISFACT L0000077     HROFDY 0.0 0.0 0.0 0.0 0.0 0.0
EMISFACT L0000077     HROFDY 0.0 1.0 1.0 1.0 1.0 1.0
EMISFACT L0000077     HROFDY 1.0 1.0 1.0 1.0 1.0 1.0
EMISFACT L0000077     HROFDY 1.0 0.0 0.0 0.0 0.0 0.0
EMISFACT L0000078     HROFDY 0.0 0.0 0.0 0.0 0.0 0.0
EMISFACT L0000078     HROFDY 0.0 1.0 1.0 1.0 1.0 1.0
EMISFACT L0000078     HROFDY 1.0 1.0 1.0 1.0 1.0 1.0
EMISFACT L0000078     HROFDY 1.0 0.0 0.0 0.0 0.0 0.0
EMISFACT L0000079     HROFDY 0.0 0.0 0.0 0.0 0.0 0.0
EMISFACT L0000079     HROFDY 0.0 1.0 1.0 1.0 1.0 1.0
EMISFACT L0000079     HROFDY 1.0 1.0 1.0 1.0 1.0 1.0
EMISFACT L0000079     HROFDY 1.0 0.0 0.0 0.0 0.0 0.0
EMISFACT L0000080     HROFDY 0.0 0.0 0.0 0.0 0.0 0.0
EMISFACT L0000080     HROFDY 0.0 1.0 1.0 1.0 1.0 1.0
EMISFACT L0000080     HROFDY 1.0 1.0 1.0 1.0 1.0 1.0
EMISFACT L0000080     HROFDY 1.0 0.0 0.0 0.0 0.0 0.0
EMISFACT L0000081     HROFDY 0.0 0.0 0.0 0.0 0.0 0.0
EMISFACT L0000081     HROFDY 0.0 1.0 1.0 1.0 1.0 1.0
EMISFACT L0000081     HROFDY 1.0 1.0 1.0 1.0 1.0 1.0
EMISFACT L0000081     HROFDY 1.0 0.0 0.0 0.0 0.0 0.0
EMISFACT L0000082     HROFDY 0.0 0.0 0.0 0.0 0.0 0.0
EMISFACT L0000082     HROFDY 0.0 1.0 1.0 1.0 1.0 1.0
EMISFACT L0000082     HROFDY 1.0 1.0 1.0 1.0 1.0 1.0
EMISFACT L0000082     HROFDY 1.0 0.0 0.0 0.0 0.0 0.0
EMISFACT L0000083     HROFDY 0.0 0.0 0.0 0.0 0.0 0.0
EMISFACT L0000083     HROFDY 0.0 1.0 1.0 1.0 1.0 1.0
EMISFACT L0000083     HROFDY 1.0 1.0 1.0 1.0 1.0 1.0
EMISFACT L0000083     HROFDY 1.0 0.0 0.0 0.0 0.0 0.0
EMISFACT L0000084     HROFDY 0.0 0.0 0.0 0.0 0.0 0.0
EMISFACT L0000084     HROFDY 0.0 1.0 1.0 1.0 1.0 1.0
EMISFACT L0000084     HROFDY 1.0 1.0 1.0 1.0 1.0 1.0
EMISFACT L0000084     HROFDY 1.0 0.0 0.0 0.0 0.0 0.0
EMISFACT L0000085     HROFDY 0.0 0.0 0.0 0.0 0.0 0.0
EMISFACT L0000085     HROFDY 0.0 1.0 1.0 1.0 1.0 1.0
EMISFACT L0000085     HROFDY 1.0 1.0 1.0 1.0 1.0 1.0
EMISFACT L0000085     HROFDY 1.0 0.0 0.0 0.0 0.0 0.0
EMISFACT L0000086     HROFDY 0.0 0.0 0.0 0.0 0.0 0.0
EMISFACT L0000086     HROFDY 0.0 1.0 1.0 1.0 1.0 1.0
EMISFACT L0000086     HROFDY 1.0 1.0 1.0 1.0 1.0 1.0
EMISFACT L0000086     HROFDY 1.0 0.0 0.0 0.0 0.0 0.0
EMISFACT L0000087     HROFDY 0.0 0.0 0.0 0.0 0.0 0.0
EMISFACT L0000087     HROFDY 0.0 1.0 1.0 1.0 1.0 1.0
EMISFACT L0000087     HROFDY 1.0 1.0 1.0 1.0 1.0 1.0
EMISFACT L0000087     HROFDY 1.0 0.0 0.0 0.0 0.0 0.0
EMISFACT L0000088     HROFDY 0.0 0.0 0.0 0.0 0.0 0.0
EMISFACT L0000088     HROFDY 0.0 1.0 1.0 1.0 1.0 1.0
EMISFACT L0000088     HROFDY 1.0 1.0 1.0 1.0 1.0 1.0
EMISFACT L0000088     HROFDY 1.0 0.0 0.0 0.0 0.0 0.0
EMISFACT L0000089     HROFDY 0.0 0.0 0.0 0.0 0.0 0.0
EMISFACT L0000089     HROFDY 0.0 1.0 1.0 1.0 1.0 1.0
EMISFACT L0000089     HROFDY 1.0 1.0 1.0 1.0 1.0 1.0
EMISFACT L0000089     HROFDY 1.0 0.0 0.0 0.0 0.0 0.0
EMISFACT L0000090     HROFDY 0.0 0.0 0.0 0.0 0.0 0.0
EMISFACT L0000090     HROFDY 0.0 1.0 1.0 1.0 1.0 1.0
EMISFACT L0000090     HROFDY 1.0 1.0 1.0 1.0 1.0 1.0
EMISFACT L0000090     HROFDY 1.0 0.0 0.0 0.0 0.0 0.0
EMISFACT L0000091     HROFDY 0.0 0.0 0.0 0.0 0.0 0.0
EMISFACT L0000091     HROFDY 0.0 1.0 1.0 1.0 1.0 1.0
EMISFACT L0000091     HROFDY 1.0 1.0 1.0 1.0 1.0 1.0
EMISFACT L0000091     HROFDY 1.0 0.0 0.0 0.0 0.0 0.0
EMISFACT L0000092     HROFDY 0.0 0.0 0.0 0.0 0.0 0.0
EMISFACT L0000092     HROFDY 0.0 1.0 1.0 1.0 1.0 1.0
EMISFACT L0000092     HROFDY 1.0 1.0 1.0 1.0 1.0 1.0
EMISFACT L0000092     HROFDY 1.0 0.0 0.0 0.0 0.0 0.0
EMISFACT L0000093     HROFDY 0.0 0.0 0.0 0.0 0.0 0.0
EMISFACT L0000093     HROFDY 0.0 1.0 1.0 1.0 1.0 1.0
EMISFACT L0000093     HROFDY 1.0 1.0 1.0 1.0 1.0 1.0
EMISFACT L0000093     HROFDY 1.0 0.0 0.0 0.0 0.0 0.0
EMISFACT L0000094     HROFDY 0.0 0.0 0.0 0.0 0.0 0.0
EMISFACT L0000094     HROFDY 0.0 1.0 1.0 1.0 1.0 1.0
EMISFACT L0000094     HROFDY 1.0 1.0 1.0 1.0 1.0 1.0
EMISFACT L0000094     HROFDY 1.0 0.0 0.0 0.0 0.0 0.0
EMISFACT L0000095     HROFDY 0.0 0.0 0.0 0.0 0.0 0.0
EMISFACT L0000095     HROFDY 0.0 1.0 1.0 1.0 1.0 1.0
EMISFACT L0000095     HROFDY 1.0 1.0 1.0 1.0 1.0 1.0
EMISFACT L0000095     HROFDY 1.0 0.0 0.0 0.0 0.0 0.0
EMISFACT L0000096     HROFDY 0.0 0.0 0.0 0.0 0.0 0.0
EMISFACT L0000096     HROFDY 0.0 1.0 1.0 1.0 1.0 1.0
EMISFACT L0000096     HROFDY 1.0 1.0 1.0 1.0 1.0 1.0
```

```
EMISFACT L0000096     HROFDY 1.0 0.0 0.0 0.0 0.0 0.0
EMISFACT L0000097     HROFDY 0.0 0.0 0.0 0.0 0.0 0.0
EMISFACT L0000097     HROFDY 0.0 1.0 1.0 1.0 1.0 1.0
EMISFACT L0000097     HROFDY 1.0 1.0 1.0 1.0 1.0 1.0
EMISFACT L0000097     HROFDY 1.0 0.0 0.0 0.0 0.0 0.0
EMISFACT L0000098     HROFDY 0.0 0.0 0.0 0.0 0.0 0.0
EMISFACT L0000098     HROFDY 0.0 1.0 1.0 1.0 1.0 1.0
EMISFACT L0000098     HROFDY 1.0 1.0 1.0 1.0 1.0 1.0
EMISFACT L0000098     HROFDY 1.0 0.0 0.0 0.0 0.0 0.0
EMISFACT L0000099     HROFDY 0.0 0.0 0.0 0.0 0.0 0.0
EMISFACT L0000099     HROFDY 0.0 1.0 1.0 1.0 1.0 1.0
EMISFACT L0000099     HROFDY 1.0 1.0 1.0 1.0 1.0 1.0
EMISFACT L0000099     HROFDY 1.0 0.0 0.0 0.0 0.0 0.0
EMISFACT L0000100     HROFDY 0.0 0.0 0.0 0.0 0.0 0.0
EMISFACT L0000100     HROFDY 0.0 1.0 1.0 1.0 1.0 1.0
EMISFACT L0000100     HROFDY 1.0 1.0 1.0 1.0 1.0 1.0
EMISFACT L0000100     HROFDY 1.0 0.0 0.0 0.0 0.0 0.0
EMISFACT L0000101     HROFDY 0.0 0.0 0.0 0.0 0.0 0.0
EMISFACT L0000101     HROFDY 0.0 1.0 1.0 1.0 1.0 1.0
EMISFACT L0000101     HROFDY 1.0 1.0 1.0 1.0 1.0 1.0
EMISFACT L0000101     HROFDY 1.0 0.0 0.0 0.0 0.0 0.0
EMISFACT L0000102     HROFDY 0.0 0.0 0.0 0.0 0.0 0.0
EMISFACT L0000102     HROFDY 0.0 1.0 1.0 1.0 1.0 1.0
EMISFACT L0000102     HROFDY 1.0 1.0 1.0 1.0 1.0 1.0
EMISFACT L0000102     HROFDY 1.0 0.0 0.0 0.0 0.0 0.0
EMISFACT L0000103     HROFDY 0.0 0.0 0.0 0.0 0.0 0.0
EMISFACT L0000103     HROFDY 0.0 1.0 1.0 1.0 1.0 1.0
EMISFACT L0000103     HROFDY 1.0 1.0 1.0 1.0 1.0 1.0
EMISFACT L0000103     HROFDY 1.0 0.0 0.0 0.0 0.0 0.0
EMISFACT L0000104     HROFDY 0.0 0.0 0.0 0.0 0.0 0.0
EMISFACT L0000104     HROFDY 0.0 1.0 1.0 1.0 1.0 1.0
EMISFACT L0000104     HROFDY 1.0 1.0 1.0 1.0 1.0 1.0
EMISFACT L0000104     HROFDY 1.0 0.0 0.0 0.0 0.0 0.0
EMISFACT L0000105     HROFDY 0.0 0.0 0.0 0.0 0.0 0.0
EMISFACT L0000105     HROFDY 0.0 1.0 1.0 1.0 1.0 1.0
EMISFACT L0000105     HROFDY 1.0 1.0 1.0 1.0 1.0 1.0
EMISFACT L0000105     HROFDY 1.0 0.0 0.0 0.0 0.0 0.0
EMISFACT L0000106     HROFDY 0.0 0.0 0.0 0.0 0.0 0.0
EMISFACT L0000106     HROFDY 0.0 1.0 1.0 1.0 1.0 1.0
EMISFACT L0000106     HROFDY 1.0 1.0 1.0 1.0 1.0 1.0
EMISFACT L0000106     HROFDY 1.0 0.0 0.0 0.0 0.0 0.0
EMISFACT L0000107     HROFDY 0.0 0.0 0.0 0.0 0.0 0.0
EMISFACT L0000107     HROFDY 0.0 1.0 1.0 1.0 1.0 1.0
EMISFACT L0000107     HROFDY 1.0 1.0 1.0 1.0 1.0 1.0
EMISFACT L0000107     HROFDY 1.0 0.0 0.0 0.0 0.0 0.0
EMISFACT L0000108     HROFDY 0.0 0.0 0.0 0.0 0.0 0.0
EMISFACT L0000108     HROFDY 0.0 1.0 1.0 1.0 1.0 1.0
EMISFACT L0000108     HROFDY 1.0 1.0 1.0 1.0 1.0 1.0
EMISFACT L0000108     HROFDY 1.0 0.0 0.0 0.0 0.0 0.0
EMISFACT L0000109     HROFDY 0.0 0.0 0.0 0.0 0.0 0.0
EMISFACT L0000109     HROFDY 0.0 1.0 1.0 1.0 1.0 1.0
EMISFACT L0000109     HROFDY 1.0 1.0 1.0 1.0 1.0 1.0
EMISFACT L0000109     HROFDY 1.0 0.0 0.0 0.0 0.0 0.0
EMISFACT L0000110     HROFDY 0.0 0.0 0.0 0.0 0.0 0.0
EMISFACT L0000110     HROFDY 0.0 1.0 1.0 1.0 1.0 1.0
EMISFACT L0000110     HROFDY 1.0 1.0 1.0 1.0 1.0 1.0
EMISFACT L0000110     HROFDY 1.0 0.0 0.0 0.0 0.0 0.0
EMISFACT L0000111     HROFDY 0.0 0.0 0.0 0.0 0.0 0.0
EMISFACT L0000111     HROFDY 0.0 1.0 1.0 1.0 1.0 1.0
EMISFACT L0000111     HROFDY 1.0 1.0 1.0 1.0 1.0 1.0
EMISFACT L0000111     HROFDY 1.0 0.0 0.0 0.0 0.0 0.0
EMISFACT L0000112     HROFDY 0.0 0.0 0.0 0.0 0.0 0.0
EMISFACT L0000112     HROFDY 0.0 1.0 1.0 1.0 1.0 1.0
EMISFACT L0000112     HROFDY 1.0 1.0 1.0 1.0 1.0 1.0
EMISFACT L0000112     HROFDY 1.0 0.0 0.0 0.0 0.0 0.0
EMISFACT L0000113     HROFDY 0.0 0.0 0.0 0.0 0.0 0.0
EMISFACT L0000113     HROFDY 0.0 1.0 1.0 1.0 1.0 1.0
EMISFACT L0000113     HROFDY 1.0 1.0 1.0 1.0 1.0 1.0
EMISFACT L0000113     HROFDY 1.0 0.0 0.0 0.0 0.0 0.0
EMISFACT L0000114     HROFDY 0.0 0.0 0.0 0.0 0.0 0.0
EMISFACT L0000114     HROFDY 0.0 1.0 1.0 1.0 1.0 1.0
EMISFACT L0000114     HROFDY 1.0 1.0 1.0 1.0 1.0 1.0
EMISFACT L0000114     HROFDY 1.0 0.0 0.0 0.0 0.0 0.0
EMISFACT L0000115     HROFDY 0.0 0.0 0.0 0.0 0.0 0.0
EMISFACT L0000115     HROFDY 0.0 1.0 1.0 1.0 1.0 1.0
EMISFACT L0000115     HROFDY 1.0 1.0 1.0 1.0 1.0 1.0
EMISFACT L0000115     HROFDY 1.0 0.0 0.0 0.0 0.0 0.0
EMISFACT L0000116     HROFDY 0.0 0.0 0.0 0.0 0.0 0.0
EMISFACT L0000116     HROFDY 0.0 1.0 1.0 1.0 1.0 1.0
EMISFACT L0000116     HROFDY 1.0 1.0 1.0 1.0 1.0 1.0
EMISFACT L0000116     HROFDY 1.0 0.0 0.0 0.0 0.0 0.0
```

```
EMISFACT L0000117     HROFDY 0.0 0.0 0.0 0.0 0.0 0.0
EMISFACT L0000117     HROFDY 0.0 1.0 1.0 1.0 1.0 1.0
EMISFACT L0000117     HROFDY 1.0 1.0 1.0 1.0 1.0 1.0
EMISFACT L0000117     HROFDY 1.0 0.0 0.0 0.0 0.0 0.0
EMISFACT L0000118     HROFDY 0.0 0.0 0.0 0.0 0.0 0.0
EMISFACT L0000118     HROFDY 0.0 1.0 1.0 1.0 1.0 1.0
EMISFACT L0000118     HROFDY 1.0 1.0 1.0 1.0 1.0 1.0
EMISFACT L0000118     HROFDY 1.0 0.0 0.0 0.0 0.0 0.0
EMISFACT L0000119     HROFDY 0.0 0.0 0.0 0.0 0.0 0.0
EMISFACT L0000119     HROFDY 0.0 1.0 1.0 1.0 1.0 1.0
EMISFACT L0000119     HROFDY 1.0 1.0 1.0 1.0 1.0 1.0
EMISFACT L0000119     HROFDY 1.0 0.0 0.0 0.0 0.0 0.0
EMISFACT L0000120     HROFDY 0.0 0.0 0.0 0.0 0.0 0.0
EMISFACT L0000120     HROFDY 0.0 1.0 1.0 1.0 1.0 1.0
EMISFACT L0000120     HROFDY 1.0 1.0 1.0 1.0 1.0 1.0
EMISFACT L0000120     HROFDY 1.0 0.0 0.0 0.0 0.0 0.0
EMISFACT L0000121     HROFDY 0.0 0.0 0.0 0.0 0.0 0.0
EMISFACT L0000121     HROFDY 0.0 1.0 1.0 1.0 1.0 1.0
EMISFACT L0000121     HROFDY 1.0 1.0 1.0 1.0 1.0 1.0
EMISFACT L0000121     HROFDY 1.0 0.0 0.0 0.0 0.0 0.0
EMISFACT L0000122     HROFDY 0.0 0.0 0.0 0.0 0.0 0.0
EMISFACT L0000122     HROFDY 0.0 1.0 1.0 1.0 1.0 1.0
EMISFACT L0000122     HROFDY 1.0 1.0 1.0 1.0 1.0 1.0
EMISFACT L0000122     HROFDY 1.0 0.0 0.0 0.0 0.0 0.0
EMISFACT L0000123     HROFDY 0.0 0.0 0.0 0.0 0.0 0.0
EMISFACT L0000123     HROFDY 0.0 1.0 1.0 1.0 1.0 1.0
EMISFACT L0000123     HROFDY 1.0 1.0 1.0 1.0 1.0 1.0
EMISFACT L0000123     HROFDY 1.0 0.0 0.0 0.0 0.0 0.0
EMISFACT L0000124     HROFDY 0.0 0.0 0.0 0.0 0.0 0.0
EMISFACT L0000124     HROFDY 0.0 1.0 1.0 1.0 1.0 1.0
EMISFACT L0000124     HROFDY 1.0 1.0 1.0 1.0 1.0 1.0
EMISFACT L0000124     HROFDY 1.0 0.0 0.0 0.0 0.0 0.0
EMISFACT L0000125     HROFDY 0.0 0.0 0.0 0.0 0.0 0.0
EMISFACT L0000125     HROFDY 0.0 1.0 1.0 1.0 1.0 1.0
EMISFACT L0000125     HROFDY 1.0 1.0 1.0 1.0 1.0 1.0
EMISFACT L0000125     HROFDY 1.0 0.0 0.0 0.0 0.0 0.0
EMISFACT L0000126     HROFDY 0.0 0.0 0.0 0.0 0.0 0.0
EMISFACT L0000126     HROFDY 0.0 1.0 1.0 1.0 1.0 1.0
EMISFACT L0000126     HROFDY 1.0 1.0 1.0 1.0 1.0 1.0
EMISFACT L0000126     HROFDY 1.0 0.0 0.0 0.0 0.0 0.0
EMISFACT L0000127     HROFDY 0.0 0.0 0.0 0.0 0.0 0.0
EMISFACT L0000127     HROFDY 0.0 1.0 1.0 1.0 1.0 1.0
EMISFACT L0000127     HROFDY 1.0 1.0 1.0 1.0 1.0 1.0
EMISFACT L0000127     HROFDY 1.0 0.0 0.0 0.0 0.0 0.0
EMISFACT L0000128     HROFDY 0.0 0.0 0.0 0.0 0.0 0.0
EMISFACT L0000128     HROFDY 0.0 1.0 1.0 1.0 1.0 1.0
EMISFACT L0000128     HROFDY 1.0 1.0 1.0 1.0 1.0 1.0
EMISFACT L0000128     HROFDY 1.0 0.0 0.0 0.0 0.0 0.0
EMISFACT L0000129     HROFDY 0.0 0.0 0.0 0.0 0.0 0.0
EMISFACT L0000129     HROFDY 0.0 1.0 1.0 1.0 1.0 1.0
EMISFACT L0000129     HROFDY 1.0 1.0 1.0 1.0 1.0 1.0
EMISFACT L0000129     HROFDY 1.0 0.0 0.0 0.0 0.0 0.0
EMISFACT L0000130     HROFDY 0.0 0.0 0.0 0.0 0.0 0.0
EMISFACT L0000130     HROFDY 0.0 1.0 1.0 1.0 1.0 1.0
EMISFACT L0000130     HROFDY 1.0 1.0 1.0 1.0 1.0 1.0
EMISFACT L0000130     HROFDY 1.0 0.0 0.0 0.0 0.0 0.0
EMISFACT L0000131     HROFDY 0.0 0.0 0.0 0.0 0.0 0.0
EMISFACT L0000131     HROFDY 0.0 1.0 1.0 1.0 1.0 1.0
EMISFACT L0000131     HROFDY 1.0 1.0 1.0 1.0 1.0 1.0
EMISFACT L0000131     HROFDY 1.0 0.0 0.0 0.0 0.0 0.0
EMISFACT L0000132     HROFDY 0.0 0.0 0.0 0.0 0.0 0.0
EMISFACT L0000132     HROFDY 0.0 1.0 1.0 1.0 1.0 1.0
EMISFACT L0000132     HROFDY 1.0 1.0 1.0 1.0 1.0 1.0
EMISFACT L0000132     HROFDY 1.0 0.0 0.0 0.0 0.0 0.0
EMISFACT L0000133     HROFDY 0.0 0.0 0.0 0.0 0.0 0.0
EMISFACT L0000133     HROFDY 0.0 1.0 1.0 1.0 1.0 1.0
EMISFACT L0000133     HROFDY 1.0 1.0 1.0 1.0 1.0 1.0
EMISFACT L0000133     HROFDY 1.0 0.0 0.0 0.0 0.0 0.0
EMISFACT L0000134     HROFDY 0.0 0.0 0.0 0.0 0.0 0.0
EMISFACT L0000134     HROFDY 0.0 1.0 1.0 1.0 1.0 1.0
EMISFACT L0000134     HROFDY 1.0 1.0 1.0 1.0 1.0 1.0
EMISFACT L0000134     HROFDY 1.0 0.0 0.0 0.0 0.0 0.0
EMISFACT L0000135     HROFDY 0.0 0.0 0.0 0.0 0.0 0.0
EMISFACT L0000135     HROFDY 0.0 1.0 1.0 1.0 1.0 1.0
EMISFACT L0000135     HROFDY 1.0 1.0 1.0 1.0 1.0 1.0
EMISFACT L0000135     HROFDY 1.0 0.0 0.0 0.0 0.0 0.0
EMISFACT L0000136     HROFDY 0.0 0.0 0.0 0.0 0.0 0.0
EMISFACT L0000136     HROFDY 0.0 1.0 1.0 1.0 1.0 1.0
EMISFACT L0000136     HROFDY 1.0 1.0 1.0 1.0 1.0 1.0
EMISFACT L0000136     HROFDY 1.0 0.0 0.0 0.0 0.0 0.0
EMISFACT L0000137     HROFDY 0.0 0.0 0.0 0.0 0.0 0.0
```

```
   EMISFACT L0000137     HROFDY 0.0 1.0 1.0 1.0 1.0 1.0
   EMISFACT L0000137     HROFDY 1.0 1.0 1.0 1.0 1.0 1.0
   EMISFACT L0000137     HROFDY 1.0 0.0 0.0 0.0 0.0 0.0
   EMISFACT L0000138     HROFDY 0.0 0.0 0.0 0.0 0.0 0.0
   EMISFACT L0000138     HROFDY 0.0 1.0 1.0 1.0 1.0 1.0
   EMISFACT L0000138     HROFDY 1.0 1.0 1.0 1.0 1.0 1.0
   EMISFACT L0000138     HROFDY 1.0 0.0 0.0 0.0 0.0 0.0
   EMISFACT IDLESHEL     HROFDY 0.0 0.0 0.0 0.0 0.0 0.0
   EMISFACT IDLESHEL     HROFDY 0.0 1.0 1.0 1.0 1.0 1.0
   EMISFACT IDLESHEL     HROFDY 1.0 1.0 1.0 1.0 1.0 1.0
   EMISFACT IDLESHEL     HROFDY 1.0 0.0 0.0 0.0 0.0 0.0
   EMISFACT IDLECAL      HROFDY 0.0 0.0 0.0 0.0 0.0 0.0
   EMISFACT IDLECAL      HROFDY 0.0 1.0 1.0 1.0 1.0 1.0
   EMISFACT IDLECAL      HROFDY 1.0 1.0 1.0 1.0 1.0 1.0
   EMISFACT IDLECAL      HROFDY 1.0 0.0 0.0 0.0 0.0 0.0
   SRCGROUP ALL
SO FINISHED
**
****************************************
** AERMOD Receptor Pathway
****************************************
**
**
RE STARTING
   INCLUDED "Pit PM10.rou"
RE FINISHED
**
****************************************
** AERMOD Meteorology Pathway
****************************************
**
**
ME STARTING
   SURFFILE ..\burk8.sfc
   PROFFILE ..\burk8.PFL
   SURFDATA 0 2008 Burbank 378.62 3782.24
   UAIRDATA 3190 2008
   SITEDATA 99999 2008
   PROFBASE 175.0 METERS
ME FINISHED
**
****************************************
** AERMOD Output Pathway
****************************************
**
**
OU STARTING
   RECTABLE ALLAVE 1ST
   RECTABLE 1 1ST
** Auto-Generated Plotfiles
   PLOTFILE 1 ALL 1ST "Pit PM10.AD\01H1GALL.PLT" 31
   PLOTFILE ANNUAL ALL "Pit PM10.AD\AN00GALL.PLT" 32
   SUMMFILE "Pit PM10.sum"
OU FINISHED
**
****************************************
** Project Parameters
****************************************
** PROJCTN  CoordinateSystemUTM
** DESCPTN  UTM: Universal Transverse Mercator
** DATUM    World Geodetic System 1984
** DTMRGN   Global Definition
** UNITS    m
** ZONE     11
** ZONEINX  0
**
```

APPENDIX H

AERMOD Model Diesel TOG Printouts for Spreading Grounds Area

```
**
****************************************
**
** AERMOD Input Produced by:
** AERMOD View Ver. 8.9.0
** Lakes Environmental Software Inc.
** Date: 6/3/2015
** File: C:\Vista Env\2013\13001 Pacoima\AERMOD\Spreading TOG\Spreading TOG.ADI
**
****************************************
**
**
****************************************
** AERMOD Control Pathway
****************************************
**
**
CO STARTING
   TITLEONE Pacoima Spreading Grounds Improvement Project - Diesel TOG
   TITLETWO Spreading Basin Area - Diesel TOG Emissions
   MODELOPT DFAULT CONC
   AVERTIME 1 ANNUAL
   URBANOPT 9862049 Los_Angeles_County
   POLLUTID TOG
   RUNORNOT RUN
   ERRORFIL "Spreading TOG.err"
CO FINISHED
**
****************************************
** AERMOD Source Pathway
****************************************
**
**
SO STARTING
** Source Location **
** Source ID - Type - X Coord. - Y Coord. **
   LOCATION EQUIP1       POINT      367047.700  3792163.910      290.650
** DESCRSRC Onsite diesel equipment 1
   LOCATION EQUIP2       POINT      366751.908  3792053.951      288.400
** DESCRSRC Onsite diesel equipment 2
   LOCATION EQUIP3       POINT      367051.230  3791514.562      283.530
** DESCRSRC Onsite diesel equipment 3
   LOCATION EQUIP4       POINT      366395.022  3791778.217      283.040
** DESCRSRC Onsite diesel equipment 4
   LOCATION EQUIP5       POINT      366218.498  3791400.897      277.170
** DESCRSRC Onsite diesel equipment 5
   LOCATION EQUIP6       POINT      366439.153  3790995.821      274.820
** DESCRSRC Onsite diesel equipment 6
   LOCATION IDLEN        POINT      366694.580  3791808.490      284.500
** DESCRSRC Haul truck Idling north of Devondhire
   LOCATION IDLES        POINT      366558.350  3791378.467      278.980
** DESCRSRC Haul truck Idling south of Devonshire
** ----------------------------------------------------------------------
** Line Source Represented by Separated Volume Sources
** LINE VOLUME Source ID = RDONNDEV
** DESCRSRC Onsite Haul Trucks north of Devonshire
** PREFIX
** Length of Side = 3.66
** Configuration = Separated
** Emission Rate = 0.0000318
** Vertical Dimension = 1.83
** SZINIT = 0.85
** Nodes = 7
** 366882.612, 3791676.095, 283.90, 1.83, 3.38
** 366874.937, 3791831.512, 285.99, 1.83, 3.38
** 366817.375, 3791937.043, 286.97, 1.83, 3.38
** 366702.251, 3791983.092, 287.18, 1.83, 3.38
** 366583.289, 3791952.393, 285.38, 1.83, 3.38
** 366558.346, 3791812.325, 283.99, 1.83, 3.38
** 366558.346, 3791660.745, 281.24, 1.83, 3.38
** ----------------------------------------------------------------------
   LOCATION L0001046     VOLUME   366882.522 3791677.921 284.27
   LOCATION L0001047     VOLUME   366882.164 3791685.170 284.35
   LOCATION L0001048     VOLUME   366881.806 3791692.419 284.42
   LOCATION L0001049     VOLUME   366881.448 3791699.668 284.50
   LOCATION L0001050     VOLUME   366881.090 3791706.917 284.58
```

LOCATION	L0001051	VOLUME	366880.732	3791714.165	284.66
LOCATION	L0001052	VOLUME	366880.374	3791721.414	284.74
LOCATION	L0001053	VOLUME	366880.016	3791728.663	284.81
LOCATION	L0001054	VOLUME	366879.658	3791735.912	284.88
LOCATION	L0001055	VOLUME	366879.300	3791743.161	284.95
LOCATION	L0001056	VOLUME	366878.942	3791750.410	285.03
LOCATION	L0001057	VOLUME	366878.585	3791757.659	285.10
LOCATION	L0001058	VOLUME	366878.227	3791764.907	285.18
LOCATION	L0001059	VOLUME	366877.869	3791772.156	285.26
LOCATION	L0001060	VOLUME	366877.511	3791779.405	285.33
LOCATION	L0001061	VOLUME	366877.153	3791786.654	285.41
LOCATION	L0001062	VOLUME	366876.795	3791793.903	285.49
LOCATION	L0001063	VOLUME	366876.437	3791801.152	285.57
LOCATION	L0001064	VOLUME	366876.079	3791808.401	285.65
LOCATION	L0001065	VOLUME	366875.721	3791815.649	285.74
LOCATION	L0001066	VOLUME	366875.363	3791822.898	285.82
LOCATION	L0001067	VOLUME	366875.005	3791830.147	285.91
LOCATION	L0001068	VOLUME	366872.117	3791836.684	285.98
LOCATION	L0001069	VOLUME	366868.641	3791843.055	286.05
LOCATION	L0001070	VOLUME	366865.166	3791849.427	286.12
LOCATION	L0001071	VOLUME	366861.690	3791855.798	286.19
LOCATION	L0001072	VOLUME	366858.215	3791862.170	286.26
LOCATION	L0001073	VOLUME	366854.740	3791868.541	286.33
LOCATION	L0001074	VOLUME	366851.264	3791874.913	286.39
LOCATION	L0001075	VOLUME	366847.789	3791881.284	286.46
LOCATION	L0001076	VOLUME	366844.314	3791887.656	286.53
LOCATION	L0001077	VOLUME	366840.838	3791894.027	286.60
LOCATION	L0001078	VOLUME	366837.363	3791900.399	286.67
LOCATION	L0001079	VOLUME	366833.888	3791906.770	286.74
LOCATION	L0001080	VOLUME	366830.412	3791913.142	286.80
LOCATION	L0001081	VOLUME	366826.937	3791919.513	286.87
LOCATION	L0001082	VOLUME	366823.461	3791925.885	286.94
LOCATION	L0001083	VOLUME	366819.986	3791932.256	287.01
LOCATION	L0001084	VOLUME	366815.699	3791937.713	287.08
LOCATION	L0001085	VOLUME	366808.960	3791940.409	287.10
LOCATION	L0001086	VOLUME	366802.222	3791943.104	287.07
LOCATION	L0001087	VOLUME	366795.483	3791945.800	287.03
LOCATION	L0001088	VOLUME	366788.745	3791948.495	286.99
LOCATION	L0001089	VOLUME	366782.006	3791951.190	286.95
LOCATION	L0001090	VOLUME	366775.267	3791953.886	286.92
LOCATION	L0001091	VOLUME	366768.529	3791956.581	286.90
LOCATION	L0001092	VOLUME	366761.790	3791959.277	286.88
LOCATION	L0001093	VOLUME	366755.052	3791961.972	286.86
LOCATION	L0001094	VOLUME	366748.313	3791964.668	286.85
LOCATION	L0001095	VOLUME	366741.574	3791967.363	286.84
LOCATION	L0001096	VOLUME	366734.836	3791970.059	286.84
LOCATION	L0001097	VOLUME	366728.097	3791972.754	286.85
LOCATION	L0001098	VOLUME	366721.359	3791975.449	286.87
LOCATION	L0001099	VOLUME	366714.620	3791978.145	286.88
LOCATION	L0001100	VOLUME	366707.881	3791980.840	286.88
LOCATION	L0001101	VOLUME	366701.095	3791982.794	286.87
LOCATION	L0001102	VOLUME	366694.068	3791980.981	286.79
LOCATION	L0001103	VOLUME	366687.040	3791979.167	286.71
LOCATION	L0001104	VOLUME	366680.013	3791977.354	286.64
LOCATION	L0001105	VOLUME	366672.986	3791975.540	286.57
LOCATION	L0001106	VOLUME	366665.958	3791973.726	286.50
LOCATION	L0001107	VOLUME	366658.931	3791971.913	286.44
LOCATION	L0001108	VOLUME	366651.903	3791970.099	286.38
LOCATION	L0001109	VOLUME	366644.876	3791968.286	286.30
LOCATION	L0001110	VOLUME	366637.848	3791966.472	286.22
LOCATION	L0001111	VOLUME	366630.821	3791964.659	286.13
LOCATION	L0001112	VOLUME	366623.793	3791962.845	286.04
LOCATION	L0001113	VOLUME	366616.766	3791961.032	285.95
LOCATION	L0001114	VOLUME	366609.738	3791959.218	285.85
LOCATION	L0001115	VOLUME	366602.711	3791957.405	285.75
LOCATION	L0001116	VOLUME	366595.683	3791955.591	285.64
LOCATION	L0001117	VOLUME	366588.656	3791953.778	285.54
LOCATION	L0001118	VOLUME	366582.989	3791950.704	285.41
LOCATION	L0001119	VOLUME	366581.716	3791943.559	285.25
LOCATION	L0001120	VOLUME	366580.444	3791936.413	285.09
LOCATION	L0001121	VOLUME	366579.171	3791929.268	284.98
LOCATION	L0001122	VOLUME	366577.899	3791922.123	284.88
LOCATION	L0001123	VOLUME	366576.626	3791914.978	284.79
LOCATION	L0001124	VOLUME	366575.354	3791907.832	284.71
LOCATION	L0001125	VOLUME	366574.082	3791900.687	284.63
LOCATION	L0001126	VOLUME	366572.809	3791893.542	284.55

```
   LOCATION L0001127     VOLUME   366571.537 3791886.397 284.47
   LOCATION L0001128     VOLUME   366570.264 3791879.251 284.40
   LOCATION L0001129     VOLUME   366568.992 3791872.106 284.32
   LOCATION L0001130     VOLUME   366567.719 3791864.961 284.24
   LOCATION L0001131     VOLUME   366566.447 3791857.815 284.16
   LOCATION L0001132     VOLUME   366565.174 3791850.670 284.09
   LOCATION L0001133     VOLUME   366563.902 3791843.525 284.01
   LOCATION L0001134     VOLUME   366562.630 3791836.380 283.93
   LOCATION L0001135     VOLUME   366561.357 3791829.234 283.85
   LOCATION L0001136     VOLUME   366560.085 3791822.089 283.78
   LOCATION L0001137     VOLUME   366558.812 3791814.944 283.70
   LOCATION L0001138     VOLUME   366558.346 3791807.727 283.62
   LOCATION L0001139     VOLUME   366558.346 3791800.470 283.54
   LOCATION L0001140     VOLUME   366558.346 3791793.212 283.46
   LOCATION L0001141     VOLUME   366558.346 3791785.954 283.39
   LOCATION L0001142     VOLUME   366558.346 3791778.697 283.31
   LOCATION L0001143     VOLUME   366558.346 3791771.439 283.23
   LOCATION L0001144     VOLUME   366558.346 3791764.181 283.15
   LOCATION L0001145     VOLUME   366558.346 3791756.923 283.07
   LOCATION L0001146     VOLUME   366558.346 3791749.666 282.99
   LOCATION L0001147     VOLUME   366558.346 3791742.408 282.83
   LOCATION L0001148     VOLUME   366558.346 3791735.150 282.67
   LOCATION L0001149     VOLUME   366558.346 3791727.893 282.52
   LOCATION L0001150     VOLUME   366558.346 3791720.635 282.36
   LOCATION L0001151     VOLUME   366558.346 3791713.377 282.20
   LOCATION L0001152     VOLUME   366558.346 3791706.120 282.04
   LOCATION L0001153     VOLUME   366558.346 3791698.862 281.89
   LOCATION L0001154     VOLUME   366558.346 3791691.604 281.73
   LOCATION L0001155     VOLUME   366558.346 3791684.347 281.57
   LOCATION L0001156     VOLUME   366558.346 3791677.089 281.42
   LOCATION L0001157     VOLUME   366558.346 3791669.831 281.26
   LOCATION L0001158     VOLUME   366558.346 3791662.573 281.10
** End of LINE VOLUME Source ID = RDONNDEV
** ---------------------------------------------------------------------
** Line Source Represented by Separated Volume Sources
** LINE VOLUME Source ID = RDONSDEV
** DESCRSRC Onsite Haul Trucks south of Devonshire
** PREFIX
** Length of Side = 3.66
** Configuration = Separated
** Emission Rate = 0.0000318
** Vertical Dimension = 1.83
** SZINIT = 0.85
** Nodes = 7
** 366391.416, 3791622.370, 280.75, 1.83, 3.38
** 366299.316, 3791386.365, 277.43, 1.83, 3.38
** 366347.285, 3791261.647, 276.84, 1.83, 3.38
** 366472.003, 3791123.498, 275.91, 1.83, 3.38
** 366757.894, 3791330.722, 280.02, 1.83, 3.38
** 366851.913, 3791509.164, 281.65, 1.83, 3.38
** 366853.831, 3791643.476, 283.74, 1.83, 3.38
** ---------------------------------------------------------------------
   LOCATION L0001159     VOLUME   366390.751 3791620.666 280.57
   LOCATION L0001160     VOLUME   366388.106 3791613.889 280.50
   LOCATION L0001161     VOLUME   366385.462 3791607.112 280.42
   LOCATION L0001162     VOLUME   366382.817 3791600.335 280.35
   LOCATION L0001163     VOLUME   366380.172 3791593.558 280.28
   LOCATION L0001164     VOLUME   366377.527 3791586.781 280.20
   LOCATION L0001165     VOLUME   366374.883 3791580.004 280.13
   LOCATION L0001166     VOLUME   366372.238 3791573.227 280.06
   LOCATION L0001167     VOLUME   366369.593 3791566.450 279.98
   LOCATION L0001168     VOLUME   366366.949 3791559.673 279.91
   LOCATION L0001169     VOLUME   366364.304 3791552.896 279.83
   LOCATION L0001170     VOLUME   366361.659 3791546.119 279.76
   LOCATION L0001171     VOLUME   366359.015 3791539.342 279.69
   LOCATION L0001172     VOLUME   366356.370 3791532.565 279.61
   LOCATION L0001173     VOLUME   366353.725 3791525.788 279.54
   LOCATION L0001174     VOLUME   366351.080 3791519.011 279.47
   LOCATION L0001175     VOLUME   366348.436 3791512.234 279.39
   LOCATION L0001176     VOLUME   366345.791 3791505.457 279.32
   LOCATION L0001177     VOLUME   366343.146 3791498.680 279.24
   LOCATION L0001178     VOLUME   366340.502 3791491.903 279.17
   LOCATION L0001179     VOLUME   366337.857 3791485.126 279.07
   LOCATION L0001180     VOLUME   366335.212 3791478.349 278.97
   LOCATION L0001181     VOLUME   366332.568 3791471.572 278.86
   LOCATION L0001182     VOLUME   366329.923 3791464.795 278.75
```

LOCATION	L0001183	VOLUME	366327.278	3791458.018	278.64
LOCATION	L0001184	VOLUME	366324.634	3791451.241	278.54
LOCATION	L0001185	VOLUME	366321.989	3791444.463	278.43
LOCATION	L0001186	VOLUME	366319.344	3791437.686	278.32
LOCATION	L0001187	VOLUME	366316.699	3791430.909	278.22
LOCATION	L0001188	VOLUME	366314.055	3791424.132	278.11
LOCATION	L0001189	VOLUME	366311.410	3791417.355	278.00
LOCATION	L0001190	VOLUME	366308.765	3791410.578	277.90
LOCATION	L0001191	VOLUME	366306.121	3791403.801	277.79
LOCATION	L0001192	VOLUME	366303.476	3791397.024	277.68
LOCATION	L0001193	VOLUME	366300.831	3791390.247	277.58
LOCATION	L0001194	VOLUME	366300.432	3791383.465	277.50
LOCATION	L0001195	VOLUME	366303.044	3791376.675	277.50
LOCATION	L0001196	VOLUME	366305.655	3791369.885	277.49
LOCATION	L0001197	VOLUME	366308.266	3791363.095	277.47
LOCATION	L0001198	VOLUME	366310.878	3791356.305	277.45
LOCATION	L0001199	VOLUME	366313.489	3791349.515	277.43
LOCATION	L0001200	VOLUME	366316.101	3791342.725	277.40
LOCATION	L0001201	VOLUME	366318.712	3791335.935	277.36
LOCATION	L0001202	VOLUME	366321.324	3791329.146	277.32
LOCATION	L0001203	VOLUME	366323.935	3791322.356	277.28
LOCATION	L0001204	VOLUME	366326.547	3791315.566	277.22
LOCATION	L0001205	VOLUME	366329.158	3791308.776	277.17
LOCATION	L0001206	VOLUME	366331.770	3791301.986	277.11
LOCATION	L0001207	VOLUME	366334.381	3791295.196	277.04
LOCATION	L0001208	VOLUME	366336.993	3791288.406	276.97
LOCATION	L0001209	VOLUME	366339.604	3791281.616	276.90
LOCATION	L0001210	VOLUME	366342.216	3791274.826	276.82
LOCATION	L0001211	VOLUME	366344.827	3791268.037	276.75
LOCATION	L0001212	VOLUME	366347.573	3791261.329	276.68
LOCATION	L0001213	VOLUME	366352.447	3791255.929	276.62
LOCATION	L0001214	VOLUME	366357.322	3791250.529	276.56
LOCATION	L0001215	VOLUME	366362.197	3791245.129	276.50
LOCATION	L0001216	VOLUME	366367.072	3791239.729	276.45
LOCATION	L0001217	VOLUME	366371.947	3791234.329	276.39
LOCATION	L0001218	VOLUME	366376.822	3791228.930	276.33
LOCATION	L0001219	VOLUME	366381.697	3791223.530	276.27
LOCATION	L0001220	VOLUME	366386.571	3791218.130	276.22
LOCATION	L0001221	VOLUME	366391.446	3791212.730	276.16
LOCATION	L0001222	VOLUME	366396.321	3791207.330	276.10
LOCATION	L0001223	VOLUME	366401.196	3791201.930	276.04
LOCATION	L0001224	VOLUME	366406.071	3791196.531	276.00
LOCATION	L0001225	VOLUME	366410.946	3791191.131	276.00
LOCATION	L0001226	VOLUME	366415.821	3791185.731	276.04
LOCATION	L0001227	VOLUME	366420.695	3791180.331	276.09
LOCATION	L0001228	VOLUME	366425.570	3791174.931	276.13
LOCATION	L0001229	VOLUME	366430.445	3791169.531	276.17
LOCATION	L0001230	VOLUME	366435.320	3791164.132	276.19
LOCATION	L0001231	VOLUME	366440.195	3791158.732	276.21
LOCATION	L0001232	VOLUME	366445.070	3791153.332	276.23
LOCATION	L0001233	VOLUME	366449.945	3791147.932	276.23
LOCATION	L0001234	VOLUME	366454.819	3791142.532	276.23
LOCATION	L0001235	VOLUME	366459.694	3791137.132	276.22
LOCATION	L0001236	VOLUME	366464.569	3791131.732	276.20
LOCATION	L0001237	VOLUME	366469.444	3791126.333	276.18
LOCATION	L0001238	VOLUME	366474.801	3791125.527	276.19
LOCATION	L0001239	VOLUME	366480.692	3791129.796	276.25
LOCATION	L0001240	VOLUME	366486.582	3791134.066	276.32
LOCATION	L0001241	VOLUME	366492.472	3791138.335	276.37
LOCATION	L0001242	VOLUME	366498.362	3791142.605	276.42
LOCATION	L0001243	VOLUME	366504.252	3791146.874	276.46
LOCATION	L0001244	VOLUME	366510.143	3791151.143	276.51
LOCATION	L0001245	VOLUME	366516.033	3791155.413	276.56
LOCATION	L0001246	VOLUME	366521.923	3791159.682	276.61
LOCATION	L0001247	VOLUME	366527.813	3791163.952	276.65
LOCATION	L0001248	VOLUME	366533.703	3791168.221	276.70
LOCATION	L0001249	VOLUME	366539.594	3791172.490	276.75
LOCATION	L0001250	VOLUME	366545.484	3791176.760	276.79
LOCATION	L0001251	VOLUME	366551.374	3791181.029	276.84
LOCATION	L0001252	VOLUME	366557.264	3791185.299	276.89
LOCATION	L0001253	VOLUME	366563.155	3791189.568	276.93
LOCATION	L0001254	VOLUME	366569.045	3791193.838	276.98
LOCATION	L0001255	VOLUME	366574.935	3791198.107	277.03
LOCATION	L0001256	VOLUME	366580.825	3791202.376	277.08
LOCATION	L0001257	VOLUME	366586.715	3791206.646	277.12
LOCATION	L0001258	VOLUME	366592.606	3791210.915	277.17

```
   LOCATION L0001259     VOLUME   366598.496 3791215.185 277.22
   LOCATION L0001260     VOLUME   366604.386 3791219.454 277.26
   LOCATION L0001261     VOLUME   366610.276 3791223.723 277.31
   LOCATION L0001262     VOLUME   366616.166 3791227.993 277.36
   LOCATION L0001263     VOLUME   366622.057 3791232.262 277.41
   LOCATION L0001264     VOLUME   366627.947 3791236.532 277.45
   LOCATION L0001265     VOLUME   366633.837 3791240.801 277.50
   LOCATION L0001266     VOLUME   366639.727 3791245.071 277.55
   LOCATION L0001267     VOLUME   366645.618 3791249.340 277.65
   LOCATION L0001268     VOLUME   366651.508 3791253.609 277.85
   LOCATION L0001269     VOLUME   366657.398 3791257.879 278.05
   LOCATION L0001270     VOLUME   366663.288 3791262.148 278.25
   LOCATION L0001271     VOLUME   366669.178 3791266.418 278.45
   LOCATION L0001272     VOLUME   366675.069 3791270.687 278.65
   LOCATION L0001273     VOLUME   366680.959 3791274.957 278.84
   LOCATION L0001274     VOLUME   366686.849 3791279.226 279.04
   LOCATION L0001275     VOLUME   366692.739 3791283.495 279.24
   LOCATION L0001276     VOLUME   366698.629 3791287.765 279.43
   LOCATION L0001277     VOLUME   366704.520 3791292.034 279.59
   LOCATION L0001278     VOLUME   366710.410 3791296.304 279.74
   LOCATION L0001279     VOLUME   366716.300 3791300.573 279.89
   LOCATION L0001280     VOLUME   366722.190 3791304.842 280.00
   LOCATION L0001281     VOLUME   366728.081 3791309.112 280.02
   LOCATION L0001282     VOLUME   366733.971 3791313.381 280.05
   LOCATION L0001283     VOLUME   366739.861 3791317.651 280.08
   LOCATION L0001284     VOLUME   366745.751 3791321.920 280.13
   LOCATION L0001285     VOLUME   366751.641 3791326.190 280.17
   LOCATION L0001286     VOLUME   366757.532 3791330.459 280.23
   LOCATION L0001287     VOLUME   366761.077 3791336.762 280.29
   LOCATION L0001288     VOLUME   366764.468 3791343.198 280.35
   LOCATION L0001289     VOLUME   366767.859 3791349.634 280.42
   LOCATION L0001290     VOLUME   366771.250 3791356.070 280.50
   LOCATION L0001291     VOLUME   366774.641 3791362.506 280.58
   LOCATION L0001292     VOLUME   366778.032 3791368.942 280.66
   LOCATION L0001293     VOLUME   366781.423 3791375.378 280.76
   LOCATION L0001294     VOLUME   366784.814 3791381.814 280.83
   LOCATION L0001295     VOLUME   366788.205 3791388.250 280.88
   LOCATION L0001296     VOLUME   366791.596 3791394.686 280.92
   LOCATION L0001297     VOLUME   366794.987 3791401.122 280.96
   LOCATION L0001298     VOLUME   366798.378 3791407.559 280.99
   LOCATION L0001299     VOLUME   366801.769 3791413.995 281.01
   LOCATION L0001300     VOLUME   366805.160 3791420.431 281.04
   LOCATION L0001301     VOLUME   366808.551 3791426.867 281.06
   LOCATION L0001302     VOLUME   366811.943 3791433.303 281.10
   LOCATION L0001303     VOLUME   366815.334 3791439.739 281.14
   LOCATION L0001304     VOLUME   366818.725 3791446.175 281.19
   LOCATION L0001305     VOLUME   366822.116 3791452.611 281.24
   LOCATION L0001306     VOLUME   366825.507 3791459.047 281.30
   LOCATION L0001307     VOLUME   366828.898 3791465.483 281.36
   LOCATION L0001308     VOLUME   366832.289 3791471.919 281.45
   LOCATION L0001309     VOLUME   366835.680 3791478.356 281.56
   LOCATION L0001310     VOLUME   366839.071 3791484.792 281.68
   LOCATION L0001311     VOLUME   366842.462 3791491.228 281.79
   LOCATION L0001312     VOLUME   366845.853 3791497.664 281.90
   LOCATION L0001313     VOLUME   366849.244 3791504.100 282.02
   LOCATION L0001314     VOLUME   366851.935 3791510.715 282.12
   LOCATION L0001315     VOLUME   366852.039 3791517.989 282.20
   LOCATION L0001316     VOLUME   366852.143 3791525.263 282.28
   LOCATION L0001317     VOLUME   366852.246 3791532.537 282.36
   LOCATION L0001318     VOLUME   366852.350 3791539.811 282.44
   LOCATION L0001319     VOLUME   366852.454 3791547.085 282.52
   LOCATION L0001320     VOLUME   366852.558 3791554.359 282.59
   LOCATION L0001321     VOLUME   366852.662 3791561.633 282.67
   LOCATION L0001322     VOLUME   366852.766 3791568.907 282.75
   LOCATION L0001323     VOLUME   366852.870 3791576.181 282.83
   LOCATION L0001324     VOLUME   366852.974 3791583.455 282.91
   LOCATION L0001325     VOLUME   366853.078 3791590.729 282.99
   LOCATION L0001326     VOLUME   366853.182 3791598.003 283.07
   LOCATION L0001327     VOLUME   366853.286 3791605.277 283.14
   LOCATION L0001328     VOLUME   366853.390 3791612.551 283.22
   LOCATION L0001329     VOLUME   366853.493 3791619.825 283.30
   LOCATION L0001330     VOLUME   366853.597 3791627.099 283.38
   LOCATION L0001331     VOLUME   366853.701 3791634.373 283.46
   LOCATION L0001332     VOLUME   366853.805 3791641.647 283.54
** End of LINE VOLUME Source ID = RDONSDEV
** ----------------------------------------------------------------------
```

```
** Line Source Represented by Separated Volume Sources
** LINE VOLUME Source ID = RDOFFSITE
** DESCRSRC Offsite Haul Trucks
** PREFIX
** Length of Side = 12.19
** Configuration = Separated
** Emission Rate = 0.00002453
** Vertical Dimension = 1.83
** SZINIT = 0.85
** Nodes = 6
** 366650.445, 3791656.907, 281.71, 1.83, 11.22
** 367041.868, 3791670.338, 284.04, 1.83, 11.22
** 367032.274, 3791766.275, 284.99, 1.83, 11.22
** 367007.330, 3791843.025, 285.95, 1.83, 11.22
** 366963.199, 3791923.612, 286.99, 1.83, 11.22
** 367294.061, 3792209.300, 292.99, 1.83, 11.22
** ---------------------------------------------------------------------
   LOCATION L0001333     VOLUME   366656.538 3791657.116 282.10
   LOCATION L0001334     VOLUME   366680.648 3791657.944 282.43
   LOCATION L0001335     VOLUME   366704.758 3791658.771 282.76
   LOCATION L0001336     VOLUME   366728.868 3791659.598 283.05
   LOCATION L0001337     VOLUME   366752.978 3791660.425 283.06
   LOCATION L0001338     VOLUME   366777.088 3791661.253 283.07
   LOCATION L0001339     VOLUME   366801.198 3791662.080 283.08
   LOCATION L0001340     VOLUME   366825.308 3791662.907 283.39
   LOCATION L0001341     VOLUME   366849.418 3791663.735 283.72
   LOCATION L0001342     VOLUME   366873.528 3791664.562 284.04
   LOCATION L0001343     VOLUME   366897.638 3791665.389 284.13
   LOCATION L0001344     VOLUME   366921.748 3791666.217 284.15
   LOCATION L0001345     VOLUME   366945.858 3791667.044 284.16
   LOCATION L0001346     VOLUME   366969.968 3791667.871 284.17
   LOCATION L0001347     VOLUME   366994.078 3791668.699 284.18
   LOCATION L0001348     VOLUME   367018.189 3791669.526 284.20
   LOCATION L0001349     VOLUME   367041.825 3791670.768 284.21
   LOCATION L0001350     VOLUME   367039.424 3791694.772 284.47
   LOCATION L0001351     VOLUME   367037.024 3791718.777 284.73
   LOCATION L0001352     VOLUME   367034.623 3791742.781 284.99
   LOCATION L0001353     VOLUME   367032.115 3791766.763 285.25
   LOCATION L0001354     VOLUME   367024.659 3791789.706 285.50
   LOCATION L0001355     VOLUME   367017.202 3791812.649 285.75
   LOCATION L0001356     VOLUME   367009.746 3791835.592 285.99
   LOCATION L0001357     VOLUME   366999.497 3791857.329 286.23
   LOCATION L0001358     VOLUME   366987.910 3791878.488 286.45
   LOCATION L0001359     VOLUME   366976.322 3791899.648 286.68
   LOCATION L0001360     VOLUME   366964.735 3791920.807 286.91
   LOCATION L0001361     VOLUME   366979.038 3791937.288 287.18
   LOCATION L0001362     VOLUME   366997.298 3791953.055 287.52
   LOCATION L0001363     VOLUME   367015.557 3791968.821 287.87
   LOCATION L0001364     VOLUME   367033.816 3791984.587 288.22
   LOCATION L0001365     VOLUME   367052.076 3792000.354 288.60
   LOCATION L0001366     VOLUME   367070.335 3792016.120 288.93
   LOCATION L0001367     VOLUME   367088.594 3792031.886 289.21
   LOCATION L0001368     VOLUME   367106.854 3792047.653 289.57
   LOCATION L0001369     VOLUME   367125.113 3792063.419 290.02
   LOCATION L0001370     VOLUME   367143.372 3792079.185 290.42
   LOCATION L0001371     VOLUME   367161.631 3792094.952 290.75
   LOCATION L0001372     VOLUME   367179.891 3792110.718 290.99
   LOCATION L0001373     VOLUME   367198.150 3792126.484 291.39
   LOCATION L0001374     VOLUME   367216.409 3792142.251 291.88
   LOCATION L0001375     VOLUME   367234.669 3792158.017 292.29
   LOCATION L0001376     VOLUME   367252.928 3792173.783 292.62
   LOCATION L0001377     VOLUME   367271.187 3792189.550 292.86
   LOCATION L0001378     VOLUME   367289.447 3792205.316 293.07
** End of LINE VOLUME Source ID = RDOFFSITE
** Source Parameters **
   SRCPARAM EQUIP1            0.01     3.840   366.000  51.71000     0.100
   SRCPARAM EQUIP2            0.01     3.840   366.000  51.71000     0.100
   SRCPARAM EQUIP3            0.01     3.840   366.000  51.71000     0.100
   SRCPARAM EQUIP4            0.01     3.840   366.000  51.71000     0.100
   SRCPARAM EQUIP5            0.01     3.840   366.000  51.71000     0.100
   SRCPARAM EQUIP6            0.01     3.840   366.000  51.71000     0.100
   SRCPARAM IDLEN         0.004385     3.840   366.000  51.71000     0.100
   SRCPARAM IDLES         0.004385     3.840   366.000  51.71000     0.100
** LINE VOLUME Source ID = RDONNDEV
   SRCPARAM L0001046     0.0000002814      1.83      3.38      0.85
   SRCPARAM L0001047     0.0000002814      1.83      3.38      0.85
```

SRCPARAM	L0001048	0.0000002814	1.83	3.38	0.85
SRCPARAM	L0001049	0.0000002814	1.83	3.38	0.85
SRCPARAM	L0001050	0.0000002814	1.83	3.38	0.85
SRCPARAM	L0001051	0.0000002814	1.83	3.38	0.85
SRCPARAM	L0001052	0.0000002814	1.83	3.38	0.85
SRCPARAM	L0001053	0.0000002814	1.83	3.38	0.85
SRCPARAM	L0001054	0.0000002814	1.83	3.38	0.85
SRCPARAM	L0001055	0.0000002814	1.83	3.38	0.85
SRCPARAM	L0001056	0.0000002814	1.83	3.38	0.85
SRCPARAM	L0001057	0.0000002814	1.83	3.38	0.85
SRCPARAM	L0001058	0.0000002814	1.83	3.38	0.85
SRCPARAM	L0001059	0.0000002814	1.83	3.38	0.85
SRCPARAM	L0001060	0.0000002814	1.83	3.38	0.85
SRCPARAM	L0001061	0.0000002814	1.83	3.38	0.85
SRCPARAM	L0001062	0.0000002814	1.83	3.38	0.85
SRCPARAM	L0001063	0.0000002814	1.83	3.38	0.85
SRCPARAM	L0001064	0.0000002814	1.83	3.38	0.85
SRCPARAM	L0001065	0.0000002814	1.83	3.38	0.85
SRCPARAM	L0001066	0.0000002814	1.83	3.38	0.85
SRCPARAM	L0001067	0.0000002814	1.83	3.38	0.85
SRCPARAM	L0001068	0.0000002814	1.83	3.38	0.85
SRCPARAM	L0001069	0.0000002814	1.83	3.38	0.85
SRCPARAM	L0001070	0.0000002814	1.83	3.38	0.85
SRCPARAM	L0001071	0.0000002814	1.83	3.38	0.85
SRCPARAM	L0001072	0.0000002814	1.83	3.38	0.85
SRCPARAM	L0001073	0.0000002814	1.83	3.38	0.85
SRCPARAM	L0001074	0.0000002814	1.83	3.38	0.85
SRCPARAM	L0001075	0.0000002814	1.83	3.38	0.85
SRCPARAM	L0001076	0.0000002814	1.83	3.38	0.85
SRCPARAM	L0001077	0.0000002814	1.83	3.38	0.85
SRCPARAM	L0001078	0.0000002814	1.83	3.38	0.85
SRCPARAM	L0001079	0.0000002814	1.83	3.38	0.85
SRCPARAM	L0001080	0.0000002814	1.83	3.38	0.85
SRCPARAM	L0001081	0.0000002814	1.83	3.38	0.85
SRCPARAM	L0001082	0.0000002814	1.83	3.38	0.85
SRCPARAM	L0001083	0.0000002814	1.83	3.38	0.85
SRCPARAM	L0001084	0.0000002814	1.83	3.38	0.85
SRCPARAM	L0001085	0.0000002814	1.83	3.38	0.85
SRCPARAM	L0001086	0.0000002814	1.83	3.38	0.85
SRCPARAM	L0001087	0.0000002814	1.83	3.38	0.85
SRCPARAM	L0001088	0.0000002814	1.83	3.38	0.85
SRCPARAM	L0001089	0.0000002814	1.83	3.38	0.85
SRCPARAM	L0001090	0.0000002814	1.83	3.38	0.85
SRCPARAM	L0001091	0.0000002814	1.83	3.38	0.85
SRCPARAM	L0001092	0.0000002814	1.83	3.38	0.85
SRCPARAM	L0001093	0.0000002814	1.83	3.38	0.85
SRCPARAM	L0001094	0.0000002814	1.83	3.38	0.85
SRCPARAM	L0001095	0.0000002814	1.83	3.38	0.85
SRCPARAM	L0001096	0.0000002814	1.83	3.38	0.85
SRCPARAM	L0001097	0.0000002814	1.83	3.38	0.85
SRCPARAM	L0001098	0.0000002814	1.83	3.38	0.85
SRCPARAM	L0001099	0.0000002814	1.83	3.38	0.85
SRCPARAM	L0001100	0.0000002814	1.83	3.38	0.85
SRCPARAM	L0001101	0.0000002814	1.83	3.38	0.85
SRCPARAM	L0001102	0.0000002814	1.83	3.38	0.85
SRCPARAM	L0001103	0.0000002814	1.83	3.38	0.85
SRCPARAM	L0001104	0.0000002814	1.83	3.38	0.85
SRCPARAM	L0001105	0.0000002814	1.83	3.38	0.85
SRCPARAM	L0001106	0.0000002814	1.83	3.38	0.85
SRCPARAM	L0001107	0.0000002814	1.83	3.38	0.85
SRCPARAM	L0001108	0.0000002814	1.83	3.38	0.85
SRCPARAM	L0001109	0.0000002814	1.83	3.38	0.85
SRCPARAM	L0001110	0.0000002814	1.83	3.38	0.85
SRCPARAM	L0001111	0.0000002814	1.83	3.38	0.85
SRCPARAM	L0001112	0.0000002814	1.83	3.38	0.85
SRCPARAM	L0001113	0.0000002814	1.83	3.38	0.85
SRCPARAM	L0001114	0.0000002814	1.83	3.38	0.85
SRCPARAM	L0001115	0.0000002814	1.83	3.38	0.85
SRCPARAM	L0001116	0.0000002814	1.83	3.38	0.85
SRCPARAM	L0001117	0.0000002814	1.83	3.38	0.85
SRCPARAM	L0001118	0.0000002814	1.83	3.38	0.85
SRCPARAM	L0001119	0.0000002814	1.83	3.38	0.85
SRCPARAM	L0001120	0.0000002814	1.83	3.38	0.85
SRCPARAM	L0001121	0.0000002814	1.83	3.38	0.85
SRCPARAM	L0001122	0.0000002814	1.83	3.38	0.85
SRCPARAM	L0001123	0.0000002814	1.83	3.38	0.85

```
   SRCPARAM L0001124     0.0000002814      1.83      3.38      0.85
   SRCPARAM L0001125     0.0000002814      1.83      3.38      0.85
   SRCPARAM L0001126     0.0000002814      1.83      3.38      0.85
   SRCPARAM L0001127     0.0000002814      1.83      3.38      0.85
   SRCPARAM L0001128     0.0000002814      1.83      3.38      0.85
   SRCPARAM L0001129     0.0000002814      1.83      3.38      0.85
   SRCPARAM L0001130     0.0000002814      1.83      3.38      0.85
   SRCPARAM L0001131     0.0000002814      1.83      3.38      0.85
   SRCPARAM L0001132     0.0000002814      1.83      3.38      0.85
   SRCPARAM L0001133     0.0000002814      1.83      3.38      0.85
   SRCPARAM L0001134     0.0000002814      1.83      3.38      0.85
   SRCPARAM L0001135     0.0000002814      1.83      3.38      0.85
   SRCPARAM L0001136     0.0000002814      1.83      3.38      0.85
   SRCPARAM L0001137     0.0000002814      1.83      3.38      0.85
   SRCPARAM L0001138     0.0000002814      1.83      3.38      0.85
   SRCPARAM L0001139     0.0000002814      1.83      3.38      0.85
   SRCPARAM L0001140     0.0000002814      1.83      3.38      0.85
   SRCPARAM L0001141     0.0000002814      1.83      3.38      0.85
   SRCPARAM L0001142     0.0000002814      1.83      3.38      0.85
   SRCPARAM L0001143     0.0000002814      1.83      3.38      0.85
   SRCPARAM L0001144     0.0000002814      1.83      3.38      0.85
   SRCPARAM L0001145     0.0000002814      1.83      3.38      0.85
   SRCPARAM L0001146     0.0000002814      1.83      3.38      0.85
   SRCPARAM L0001147     0.0000002814      1.83      3.38      0.85
   SRCPARAM L0001148     0.0000002814      1.83      3.38      0.85
   SRCPARAM L0001149     0.0000002814      1.83      3.38      0.85
   SRCPARAM L0001150     0.0000002814      1.83      3.38      0.85
   SRCPARAM L0001151     0.0000002814      1.83      3.38      0.85
   SRCPARAM L0001152     0.0000002814      1.83      3.38      0.85
   SRCPARAM L0001153     0.0000002814      1.83      3.38      0.85
   SRCPARAM L0001154     0.0000002814      1.83      3.38      0.85
   SRCPARAM L0001155     0.0000002814      1.83      3.38      0.85
   SRCPARAM L0001156     0.0000002814      1.83      3.38      0.85
   SRCPARAM L0001157     0.0000002814      1.83      3.38      0.85
   SRCPARAM L0001158     0.0000002814      1.83      3.38      0.85
** ---------------------------------------------------------------------
** LINE VOLUME Source ID = RDONSDEV
   SRCPARAM L0001159     0.0000001828      1.83      3.38      0.85
   SRCPARAM L0001160     0.0000001828      1.83      3.38      0.85
   SRCPARAM L0001161     0.0000001828      1.83      3.38      0.85
   SRCPARAM L0001162     0.0000001828      1.83      3.38      0.85
   SRCPARAM L0001163     0.0000001828      1.83      3.38      0.85
   SRCPARAM L0001164     0.0000001828      1.83      3.38      0.85
   SRCPARAM L0001165     0.0000001828      1.83      3.38      0.85
   SRCPARAM L0001166     0.0000001828      1.83      3.38      0.85
   SRCPARAM L0001167     0.0000001828      1.83      3.38      0.85
   SRCPARAM L0001168     0.0000001828      1.83      3.38      0.85
   SRCPARAM L0001169     0.0000001828      1.83      3.38      0.85
   SRCPARAM L0001170     0.0000001828      1.83      3.38      0.85
   SRCPARAM L0001171     0.0000001828      1.83      3.38      0.85
   SRCPARAM L0001172     0.0000001828      1.83      3.38      0.85
   SRCPARAM L0001173     0.0000001828      1.83      3.38      0.85
   SRCPARAM L0001174     0.0000001828      1.83      3.38      0.85
   SRCPARAM L0001175     0.0000001828      1.83      3.38      0.85
   SRCPARAM L0001176     0.0000001828      1.83      3.38      0.85
   SRCPARAM L0001177     0.0000001828      1.83      3.38      0.85
   SRCPARAM L0001178     0.0000001828      1.83      3.38      0.85
   SRCPARAM L0001179     0.0000001828      1.83      3.38      0.85
   SRCPARAM L0001180     0.0000001828      1.83      3.38      0.85
   SRCPARAM L0001181     0.0000001828      1.83      3.38      0.85
   SRCPARAM L0001182     0.0000001828      1.83      3.38      0.85
   SRCPARAM L0001183     0.0000001828      1.83      3.38      0.85
   SRCPARAM L0001184     0.0000001828      1.83      3.38      0.85
   SRCPARAM L0001185     0.0000001828      1.83      3.38      0.85
   SRCPARAM L0001186     0.0000001828      1.83      3.38      0.85
   SRCPARAM L0001187     0.0000001828      1.83      3.38      0.85
   SRCPARAM L0001188     0.0000001828      1.83      3.38      0.85
   SRCPARAM L0001189     0.0000001828      1.83      3.38      0.85
   SRCPARAM L0001190     0.0000001828      1.83      3.38      0.85
   SRCPARAM L0001191     0.0000001828      1.83      3.38      0.85
   SRCPARAM L0001192     0.0000001828      1.83      3.38      0.85
   SRCPARAM L0001193     0.0000001828      1.83      3.38      0.85
   SRCPARAM L0001194     0.0000001828      1.83      3.38      0.85
   SRCPARAM L0001195     0.0000001828      1.83      3.38      0.85
   SRCPARAM L0001196     0.0000001828      1.83      3.38      0.85
   SRCPARAM L0001197     0.0000001828      1.83      3.38      0.85
```

SRCPARAM	L0001198	0.0000001828	1.83	3.38	0.85
SRCPARAM	L0001199	0.0000001828	1.83	3.38	0.85
SRCPARAM	L0001200	0.0000001828	1.83	3.38	0.85
SRCPARAM	L0001201	0.0000001828	1.83	3.38	0.85
SRCPARAM	L0001202	0.0000001828	1.83	3.38	0.85
SRCPARAM	L0001203	0.0000001828	1.83	3.38	0.85
SRCPARAM	L0001204	0.0000001828	1.83	3.38	0.85
SRCPARAM	L0001205	0.0000001828	1.83	3.38	0.85
SRCPARAM	L0001206	0.0000001828	1.83	3.38	0.85
SRCPARAM	L0001207	0.0000001828	1.83	3.38	0.85
SRCPARAM	L0001208	0.0000001828	1.83	3.38	0.85
SRCPARAM	L0001209	0.0000001828	1.83	3.38	0.85
SRCPARAM	L0001210	0.0000001828	1.83	3.38	0.85
SRCPARAM	L0001211	0.0000001828	1.83	3.38	0.85
SRCPARAM	L0001212	0.0000001828	1.83	3.38	0.85
SRCPARAM	L0001213	0.0000001828	1.83	3.38	0.85
SRCPARAM	L0001214	0.0000001828	1.83	3.38	0.85
SRCPARAM	L0001215	0.0000001828	1.83	3.38	0.85
SRCPARAM	L0001216	0.0000001828	1.83	3.38	0.85
SRCPARAM	L0001217	0.0000001828	1.83	3.38	0.85
SRCPARAM	L0001218	0.0000001828	1.83	3.38	0.85
SRCPARAM	L0001219	0.0000001828	1.83	3.38	0.85
SRCPARAM	L0001220	0.0000001828	1.83	3.38	0.85
SRCPARAM	L0001221	0.0000001828	1.83	3.38	0.85
SRCPARAM	L0001222	0.0000001828	1.83	3.38	0.85
SRCPARAM	L0001223	0.0000001828	1.83	3.38	0.85
SRCPARAM	L0001224	0.0000001828	1.83	3.38	0.85
SRCPARAM	L0001225	0.0000001828	1.83	3.38	0.85
SRCPARAM	L0001226	0.0000001828	1.83	3.38	0.85
SRCPARAM	L0001227	0.0000001828	1.83	3.38	0.85
SRCPARAM	L0001228	0.0000001828	1.83	3.38	0.85
SRCPARAM	L0001229	0.0000001828	1.83	3.38	0.85
SRCPARAM	L0001230	0.0000001828	1.83	3.38	0.85
SRCPARAM	L0001231	0.0000001828	1.83	3.38	0.85
SRCPARAM	L0001232	0.0000001828	1.83	3.38	0.85
SRCPARAM	L0001233	0.0000001828	1.83	3.38	0.85
SRCPARAM	L0001234	0.0000001828	1.83	3.38	0.85
SRCPARAM	L0001235	0.0000001828	1.83	3.38	0.85
SRCPARAM	L0001236	0.0000001828	1.83	3.38	0.85
SRCPARAM	L0001237	0.0000001828	1.83	3.38	0.85
SRCPARAM	L0001238	0.0000001828	1.83	3.38	0.85
SRCPARAM	L0001239	0.0000001828	1.83	3.38	0.85
SRCPARAM	L0001240	0.0000001828	1.83	3.38	0.85
SRCPARAM	L0001241	0.0000001828	1.83	3.38	0.85
SRCPARAM	L0001242	0.0000001828	1.83	3.38	0.85
SRCPARAM	L0001243	0.0000001828	1.83	3.38	0.85
SRCPARAM	L0001244	0.0000001828	1.83	3.38	0.85
SRCPARAM	L0001245	0.0000001828	1.83	3.38	0.85
SRCPARAM	L0001246	0.0000001828	1.83	3.38	0.85
SRCPARAM	L0001247	0.0000001828	1.83	3.38	0.85
SRCPARAM	L0001248	0.0000001828	1.83	3.38	0.85
SRCPARAM	L0001249	0.0000001828	1.83	3.38	0.85
SRCPARAM	L0001250	0.0000001828	1.83	3.38	0.85
SRCPARAM	L0001251	0.0000001828	1.83	3.38	0.85
SRCPARAM	L0001252	0.0000001828	1.83	3.38	0.85
SRCPARAM	L0001253	0.0000001828	1.83	3.38	0.85
SRCPARAM	L0001254	0.0000001828	1.83	3.38	0.85
SRCPARAM	L0001255	0.0000001828	1.83	3.38	0.85
SRCPARAM	L0001256	0.0000001828	1.83	3.38	0.85
SRCPARAM	L0001257	0.0000001828	1.83	3.38	0.85
SRCPARAM	L0001258	0.0000001828	1.83	3.38	0.85
SRCPARAM	L0001259	0.0000001828	1.83	3.38	0.85
SRCPARAM	L0001260	0.0000001828	1.83	3.38	0.85
SRCPARAM	L0001261	0.0000001828	1.83	3.38	0.85
SRCPARAM	L0001262	0.0000001828	1.83	3.38	0.85
SRCPARAM	L0001263	0.0000001828	1.83	3.38	0.85
SRCPARAM	L0001264	0.0000001828	1.83	3.38	0.85
SRCPARAM	L0001265	0.0000001828	1.83	3.38	0.85
SRCPARAM	L0001266	0.0000001828	1.83	3.38	0.85
SRCPARAM	L0001267	0.0000001828	1.83	3.38	0.85
SRCPARAM	L0001268	0.0000001828	1.83	3.38	0.85
SRCPARAM	L0001269	0.0000001828	1.83	3.38	0.85
SRCPARAM	L0001270	0.0000001828	1.83	3.38	0.85
SRCPARAM	L0001271	0.0000001828	1.83	3.38	0.85
SRCPARAM	L0001272	0.0000001828	1.83	3.38	0.85
SRCPARAM	L0001273	0.0000001828	1.83	3.38	0.85

```
   SRCPARAM L0001274     0.0000001828      1.83      3.38      0.85
   SRCPARAM L0001275     0.0000001828      1.83      3.38      0.85
   SRCPARAM L0001276     0.0000001828      1.83      3.38      0.85
   SRCPARAM L0001277     0.0000001828      1.83      3.38      0.85
   SRCPARAM L0001278     0.0000001828      1.83      3.38      0.85
   SRCPARAM L0001279     0.0000001828      1.83      3.38      0.85
   SRCPARAM L0001280     0.0000001828      1.83      3.38      0.85
   SRCPARAM L0001281     0.0000001828      1.83      3.38      0.85
   SRCPARAM L0001282     0.0000001828      1.83      3.38      0.85
   SRCPARAM L0001283     0.0000001828      1.83      3.38      0.85
   SRCPARAM L0001284     0.0000001828      1.83      3.38      0.85
   SRCPARAM L0001285     0.0000001828      1.83      3.38      0.85
   SRCPARAM L0001286     0.0000001828      1.83      3.38      0.85
   SRCPARAM L0001287     0.0000001828      1.83      3.38      0.85
   SRCPARAM L0001288     0.0000001828      1.83      3.38      0.85
   SRCPARAM L0001289     0.0000001828      1.83      3.38      0.85
   SRCPARAM L0001290     0.0000001828      1.83      3.38      0.85
   SRCPARAM L0001291     0.0000001828      1.83      3.38      0.85
   SRCPARAM L0001292     0.0000001828      1.83      3.38      0.85
   SRCPARAM L0001293     0.0000001828      1.83      3.38      0.85
   SRCPARAM L0001294     0.0000001828      1.83      3.38      0.85
   SRCPARAM L0001295     0.0000001828      1.83      3.38      0.85
   SRCPARAM L0001296     0.0000001828      1.83      3.38      0.85
   SRCPARAM L0001297     0.0000001828      1.83      3.38      0.85
   SRCPARAM L0001298     0.0000001828      1.83      3.38      0.85
   SRCPARAM L0001299     0.0000001828      1.83      3.38      0.85
   SRCPARAM L0001300     0.0000001828      1.83      3.38      0.85
   SRCPARAM L0001301     0.0000001828      1.83      3.38      0.85
   SRCPARAM L0001302     0.0000001828      1.83      3.38      0.85
   SRCPARAM L0001303     0.0000001828      1.83      3.38      0.85
   SRCPARAM L0001304     0.0000001828      1.83      3.38      0.85
   SRCPARAM L0001305     0.0000001828      1.83      3.38      0.85
   SRCPARAM L0001306     0.0000001828      1.83      3.38      0.85
   SRCPARAM L0001307     0.0000001828      1.83      3.38      0.85
   SRCPARAM L0001308     0.0000001828      1.83      3.38      0.85
   SRCPARAM L0001309     0.0000001828      1.83      3.38      0.85
   SRCPARAM L0001310     0.0000001828      1.83      3.38      0.85
   SRCPARAM L0001311     0.0000001828      1.83      3.38      0.85
   SRCPARAM L0001312     0.0000001828      1.83      3.38      0.85
   SRCPARAM L0001313     0.0000001828      1.83      3.38      0.85
   SRCPARAM L0001314     0.0000001828      1.83      3.38      0.85
   SRCPARAM L0001315     0.0000001828      1.83      3.38      0.85
   SRCPARAM L0001316     0.0000001828      1.83      3.38      0.85
   SRCPARAM L0001317     0.0000001828      1.83      3.38      0.85
   SRCPARAM L0001318     0.0000001828      1.83      3.38      0.85
   SRCPARAM L0001319     0.0000001828      1.83      3.38      0.85
   SRCPARAM L0001320     0.0000001828      1.83      3.38      0.85
   SRCPARAM L0001321     0.0000001828      1.83      3.38      0.85
   SRCPARAM L0001322     0.0000001828      1.83      3.38      0.85
   SRCPARAM L0001323     0.0000001828      1.83      3.38      0.85
   SRCPARAM L0001324     0.0000001828      1.83      3.38      0.85
   SRCPARAM L0001325     0.0000001828      1.83      3.38      0.85
   SRCPARAM L0001326     0.0000001828      1.83      3.38      0.85
   SRCPARAM L0001327     0.0000001828      1.83      3.38      0.85
   SRCPARAM L0001328     0.0000001828      1.83      3.38      0.85
   SRCPARAM L0001329     0.0000001828      1.83      3.38      0.85
   SRCPARAM L0001330     0.0000001828      1.83      3.38      0.85
   SRCPARAM L0001331     0.0000001828      1.83      3.38      0.85
   SRCPARAM L0001332     0.0000001828      1.83      3.38      0.85
** ------------------------------------------------------------------
** LINE VOLUME Source ID = RDOFFSITE
   SRCPARAM L0001333     0.0000005333      1.83     11.22      0.85
   SRCPARAM L0001334     0.0000005333      1.83     11.22      0.85
   SRCPARAM L0001335     0.0000005333      1.83     11.22      0.85
   SRCPARAM L0001336     0.0000005333      1.83     11.22      0.85
   SRCPARAM L0001337     0.0000005333      1.83     11.22      0.85
   SRCPARAM L0001338     0.0000005333      1.83     11.22      0.85
   SRCPARAM L0001339     0.0000005333      1.83     11.22      0.85
   SRCPARAM L0001340     0.0000005333      1.83     11.22      0.85
   SRCPARAM L0001341     0.0000005333      1.83     11.22      0.85
   SRCPARAM L0001342     0.0000005333      1.83     11.22      0.85
   SRCPARAM L0001343     0.0000005333      1.83     11.22      0.85
   SRCPARAM L0001344     0.0000005333      1.83     11.22      0.85
   SRCPARAM L0001345     0.0000005333      1.83     11.22      0.85
   SRCPARAM L0001346     0.0000005333      1.83     11.22      0.85
   SRCPARAM L0001347     0.0000005333      1.83     11.22      0.85
```

```
   SRCPARAM L0001348     0.0000005333      1.83     11.22      0.85
   SRCPARAM L0001349     0.0000005333      1.83     11.22      0.85
   SRCPARAM L0001350     0.0000005333      1.83     11.22      0.85
   SRCPARAM L0001351     0.0000005333      1.83     11.22      0.85
   SRCPARAM L0001352     0.0000005333      1.83     11.22      0.85
   SRCPARAM L0001353     0.0000005333      1.83     11.22      0.85
   SRCPARAM L0001354     0.0000005333      1.83     11.22      0.85
   SRCPARAM L0001355     0.0000005333      1.83     11.22      0.85
   SRCPARAM L0001356     0.0000005333      1.83     11.22      0.85
   SRCPARAM L0001357     0.0000005333      1.83     11.22      0.85
   SRCPARAM L0001358     0.0000005333      1.83     11.22      0.85
   SRCPARAM L0001359     0.0000005333      1.83     11.22      0.85
   SRCPARAM L0001360     0.0000005333      1.83     11.22      0.85
   SRCPARAM L0001361     0.0000005333      1.83     11.22      0.85
   SRCPARAM L0001362     0.0000005333      1.83     11.22      0.85
   SRCPARAM L0001363     0.0000005333      1.83     11.22      0.85
   SRCPARAM L0001364     0.0000005333      1.83     11.22      0.85
   SRCPARAM L0001365     0.0000005333      1.83     11.22      0.85
   SRCPARAM L0001366     0.0000005333      1.83     11.22      0.85
   SRCPARAM L0001367     0.0000005333      1.83     11.22      0.85
   SRCPARAM L0001368     0.0000005333      1.83     11.22      0.85
   SRCPARAM L0001369     0.0000005333      1.83     11.22      0.85
   SRCPARAM L0001370     0.0000005333      1.83     11.22      0.85
   SRCPARAM L0001371     0.0000005333      1.83     11.22      0.85
   SRCPARAM L0001372     0.0000005333      1.83     11.22      0.85
   SRCPARAM L0001373     0.0000005333      1.83     11.22      0.85
   SRCPARAM L0001374     0.0000005333      1.83     11.22      0.85
   SRCPARAM L0001375     0.0000005333      1.83     11.22      0.85
   SRCPARAM L0001376     0.0000005333      1.83     11.22      0.85
   SRCPARAM L0001377     0.0000005333      1.83     11.22      0.85
   SRCPARAM L0001378     0.0000005333      1.83     11.22      0.85
** ----------------------------------------------------------------------
   URBANSRC ALL

** Variable Emissions Type: "By Hour-of-Day (HROFDY)"
** Variable Emission Scenario: "Scenario 2"
   EMISFACT EQUIP1       HROFDY 0.0 0.0 0.0 0.0 0.0 0.0
   EMISFACT EQUIP1       HROFDY 0.0 1.0 1.0 1.0 1.0 1.0
   EMISFACT EQUIP1       HROFDY 1.0 1.0 1.0 1.0 1.0 1.0
   EMISFACT EQUIP1       HROFDY 1.0 0.0 0.0 0.0 0.0 0.0
   EMISFACT EQUIP2       HROFDY 0.0 0.0 0.0 0.0 0.0 0.0
   EMISFACT EQUIP2       HROFDY 0.0 1.0 1.0 1.0 1.0 1.0
   EMISFACT EQUIP2       HROFDY 1.0 1.0 1.0 1.0 1.0 1.0
   EMISFACT EQUIP2       HROFDY 1.0 0.0 0.0 0.0 0.0 0.0
   EMISFACT EQUIP3       HROFDY 0.0 0.0 0.0 0.0 0.0 0.0
   EMISFACT EQUIP3       HROFDY 0.0 1.0 1.0 1.0 1.0 1.0
   EMISFACT EQUIP3       HROFDY 1.0 1.0 1.0 1.0 1.0 1.0
   EMISFACT EQUIP3       HROFDY 1.0 0.0 0.0 0.0 0.0 0.0
   EMISFACT EQUIP4       HROFDY 0.0 0.0 0.0 0.0 0.0 0.0
   EMISFACT EQUIP4       HROFDY 0.0 1.0 1.0 1.0 1.0 1.0
   EMISFACT EQUIP4       HROFDY 1.0 1.0 1.0 1.0 1.0 1.0
   EMISFACT EQUIP4       HROFDY 1.0 0.0 0.0 0.0 0.0 0.0
   EMISFACT EQUIP5       HROFDY 0.0 0.0 0.0 0.0 0.0 0.0
   EMISFACT EQUIP5       HROFDY 0.0 1.0 1.0 1.0 1.0 1.0
   EMISFACT EQUIP5       HROFDY 1.0 1.0 1.0 1.0 1.0 1.0
   EMISFACT EQUIP5       HROFDY 1.0 0.0 0.0 0.0 0.0 0.0
   EMISFACT EQUIP6       HROFDY 0.0 0.0 0.0 0.0 0.0 0.0
   EMISFACT EQUIP6       HROFDY 0.0 1.0 1.0 1.0 1.0 1.0
   EMISFACT EQUIP6       HROFDY 1.0 1.0 1.0 1.0 1.0 1.0
   EMISFACT EQUIP6       HROFDY 1.0 0.0 0.0 0.0 0.0 0.0
   EMISFACT IDLEN        HROFDY 0.0 0.0 0.0 0.0 0.0 0.0
   EMISFACT IDLEN        HROFDY 0.0 1.0 1.0 1.0 1.0 1.0
   EMISFACT IDLEN        HROFDY 1.0 1.0 1.0 1.0 1.0 1.0
   EMISFACT IDLEN        HROFDY 1.0 0.0 0.0 0.0 0.0 0.0
   EMISFACT IDLES        HROFDY 0.0 0.0 0.0 0.0 0.0 0.0
   EMISFACT IDLES        HROFDY 0.0 1.0 1.0 1.0 1.0 1.0
   EMISFACT IDLES        HROFDY 1.0 1.0 1.0 1.0 1.0 1.0
   EMISFACT IDLES        HROFDY 1.0 0.0 0.0 0.0 0.0 0.0
   EMISFACT L0001046     HROFDY 0.0 0.0 0.0 0.0 0.0 0.0
   EMISFACT L0001046     HROFDY 0.0 1.0 1.0 1.0 1.0 1.0
   EMISFACT L0001046     HROFDY 1.0 1.0 1.0 1.0 1.0 1.0
   EMISFACT L0001046     HROFDY 1.0 0.0 0.0 0.0 0.0 0.0
   EMISFACT L0001047     HROFDY 0.0 0.0 0.0 0.0 0.0 0.0
   EMISFACT L0001047     HROFDY 0.0 1.0 1.0 1.0 1.0 1.0
   EMISFACT L0001047     HROFDY 1.0 1.0 1.0 1.0 1.0 1.0
   EMISFACT L0001047     HROFDY 1.0 0.0 0.0 0.0 0.0 0.0
```

```
EMISFACT L0001048     HROFDY 0.0 0.0 0.0 0.0 0.0 0.0
EMISFACT L0001048     HROFDY 0.0 1.0 1.0 1.0 1.0 1.0
EMISFACT L0001048     HROFDY 1.0 1.0 1.0 1.0 1.0 1.0
EMISFACT L0001048     HROFDY 1.0 0.0 0.0 0.0 0.0 0.0
EMISFACT L0001049     HROFDY 0.0 0.0 0.0 0.0 0.0 0.0
EMISFACT L0001049     HROFDY 0.0 1.0 1.0 1.0 1.0 1.0
EMISFACT L0001049     HROFDY 1.0 1.0 1.0 1.0 1.0 1.0
EMISFACT L0001049     HROFDY 1.0 0.0 0.0 0.0 0.0 0.0
EMISFACT L0001050     HROFDY 0.0 0.0 0.0 0.0 0.0 0.0
EMISFACT L0001050     HROFDY 0.0 1.0 1.0 1.0 1.0 1.0
EMISFACT L0001050     HROFDY 1.0 1.0 1.0 1.0 1.0 1.0
EMISFACT L0001050     HROFDY 1.0 0.0 0.0 0.0 0.0 0.0
EMISFACT L0001051     HROFDY 0.0 0.0 0.0 0.0 0.0 0.0
EMISFACT L0001051     HROFDY 0.0 1.0 1.0 1.0 1.0 1.0
EMISFACT L0001051     HROFDY 1.0 1.0 1.0 1.0 1.0 1.0
EMISFACT L0001051     HROFDY 1.0 0.0 0.0 0.0 0.0 0.0
EMISFACT L0001052     HROFDY 0.0 0.0 0.0 0.0 0.0 0.0
EMISFACT L0001052     HROFDY 0.0 1.0 1.0 1.0 1.0 1.0
EMISFACT L0001052     HROFDY 1.0 1.0 1.0 1.0 1.0 1.0
EMISFACT L0001052     HROFDY 1.0 0.0 0.0 0.0 0.0 0.0
EMISFACT L0001053     HROFDY 0.0 0.0 0.0 0.0 0.0 0.0
EMISFACT L0001053     HROFDY 0.0 1.0 1.0 1.0 1.0 1.0
EMISFACT L0001053     HROFDY 1.0 1.0 1.0 1.0 1.0 1.0
EMISFACT L0001053     HROFDY 1.0 0.0 0.0 0.0 0.0 0.0
EMISFACT L0001054     HROFDY 0.0 0.0 0.0 0.0 0.0 0.0
EMISFACT L0001054     HROFDY 0.0 1.0 1.0 1.0 1.0 1.0
EMISFACT L0001054     HROFDY 1.0 1.0 1.0 1.0 1.0 1.0
EMISFACT L0001054     HROFDY 1.0 0.0 0.0 0.0 0.0 0.0
EMISFACT L0001055     HROFDY 0.0 0.0 0.0 0.0 0.0 0.0
EMISFACT L0001055     HROFDY 0.0 1.0 1.0 1.0 1.0 1.0
EMISFACT L0001055     HROFDY 1.0 1.0 1.0 1.0 1.0 1.0
EMISFACT L0001055     HROFDY 1.0 0.0 0.0 0.0 0.0 0.0
EMISFACT L0001056     HROFDY 0.0 0.0 0.0 0.0 0.0 0.0
EMISFACT L0001056     HROFDY 0.0 1.0 1.0 1.0 1.0 1.0
EMISFACT L0001056     HROFDY 1.0 1.0 1.0 1.0 1.0 1.0
EMISFACT L0001056     HROFDY 1.0 0.0 0.0 0.0 0.0 0.0
EMISFACT L0001057     HROFDY 0.0 0.0 0.0 0.0 0.0 0.0
EMISFACT L0001057     HROFDY 0.0 1.0 1.0 1.0 1.0 1.0
EMISFACT L0001057     HROFDY 1.0 1.0 1.0 1.0 1.0 1.0
EMISFACT L0001057     HROFDY 1.0 0.0 0.0 0.0 0.0 0.0
EMISFACT L0001058     HROFDY 0.0 0.0 0.0 0.0 0.0 0.0
EMISFACT L0001058     HROFDY 0.0 1.0 1.0 1.0 1.0 1.0
EMISFACT L0001058     HROFDY 1.0 1.0 1.0 1.0 1.0 1.0
EMISFACT L0001058     HROFDY 1.0 0.0 0.0 0.0 0.0 0.0
EMISFACT L0001059     HROFDY 0.0 0.0 0.0 0.0 0.0 0.0
EMISFACT L0001059     HROFDY 0.0 1.0 1.0 1.0 1.0 1.0
EMISFACT L0001059     HROFDY 1.0 1.0 1.0 1.0 1.0 1.0
EMISFACT L0001059     HROFDY 1.0 0.0 0.0 0.0 0.0 0.0
EMISFACT L0001060     HROFDY 0.0 0.0 0.0 0.0 0.0 0.0
EMISFACT L0001060     HROFDY 0.0 1.0 1.0 1.0 1.0 1.0
EMISFACT L0001060     HROFDY 1.0 1.0 1.0 1.0 1.0 1.0
EMISFACT L0001060     HROFDY 1.0 0.0 0.0 0.0 0.0 0.0
EMISFACT L0001061     HROFDY 0.0 0.0 0.0 0.0 0.0 0.0
EMISFACT L0001061     HROFDY 0.0 1.0 1.0 1.0 1.0 1.0
EMISFACT L0001061     HROFDY 1.0 1.0 1.0 1.0 1.0 1.0
EMISFACT L0001061     HROFDY 1.0 0.0 0.0 0.0 0.0 0.0
EMISFACT L0001062     HROFDY 0.0 0.0 0.0 0.0 0.0 0.0
EMISFACT L0001062     HROFDY 0.0 1.0 1.0 1.0 1.0 1.0
EMISFACT L0001062     HROFDY 1.0 1.0 1.0 1.0 1.0 1.0
EMISFACT L0001062     HROFDY 1.0 0.0 0.0 0.0 0.0 0.0
EMISFACT L0001063     HROFDY 0.0 0.0 0.0 0.0 0.0 0.0
EMISFACT L0001063     HROFDY 0.0 1.0 1.0 1.0 1.0 1.0
EMISFACT L0001063     HROFDY 1.0 1.0 1.0 1.0 1.0 1.0
EMISFACT L0001063     HROFDY 1.0 0.0 0.0 0.0 0.0 0.0
EMISFACT L0001064     HROFDY 0.0 0.0 0.0 0.0 0.0 0.0
EMISFACT L0001064     HROFDY 0.0 1.0 1.0 1.0 1.0 1.0
EMISFACT L0001064     HROFDY 1.0 1.0 1.0 1.0 1.0 1.0
EMISFACT L0001064     HROFDY 1.0 0.0 0.0 0.0 0.0 0.0
EMISFACT L0001065     HROFDY 0.0 0.0 0.0 0.0 0.0 0.0
EMISFACT L0001065     HROFDY 0.0 1.0 1.0 1.0 1.0 1.0
EMISFACT L0001065     HROFDY 1.0 1.0 1.0 1.0 1.0 1.0
EMISFACT L0001065     HROFDY 1.0 0.0 0.0 0.0 0.0 0.0
EMISFACT L0001066     HROFDY 0.0 0.0 0.0 0.0 0.0 0.0
EMISFACT L0001066     HROFDY 0.0 1.0 1.0 1.0 1.0 1.0
EMISFACT L0001066     HROFDY 1.0 1.0 1.0 1.0 1.0 1.0
EMISFACT L0001066     HROFDY 1.0 0.0 0.0 0.0 0.0 0.0
```

```
EMISFACT L0001067     HROFDY 0.0 0.0 0.0 0.0 0.0 0.0
EMISFACT L0001067     HROFDY 0.0 1.0 1.0 1.0 1.0 1.0
EMISFACT L0001067     HROFDY 1.0 1.0 1.0 1.0 1.0 1.0
EMISFACT L0001067     HROFDY 1.0 0.0 0.0 0.0 0.0 0.0
EMISFACT L0001068     HROFDY 0.0 0.0 0.0 0.0 0.0 0.0
EMISFACT L0001068     HROFDY 0.0 1.0 1.0 1.0 1.0 1.0
EMISFACT L0001068     HROFDY 1.0 1.0 1.0 1.0 1.0 1.0
EMISFACT L0001068     HROFDY 1.0 0.0 0.0 0.0 0.0 0.0
EMISFACT L0001069     HROFDY 0.0 0.0 0.0 0.0 0.0 0.0
EMISFACT L0001069     HROFDY 0.0 1.0 1.0 1.0 1.0 1.0
EMISFACT L0001069     HROFDY 1.0 1.0 1.0 1.0 1.0 1.0
EMISFACT L0001069     HROFDY 1.0 0.0 0.0 0.0 0.0 0.0
EMISFACT L0001070     HROFDY 0.0 0.0 0.0 0.0 0.0 0.0
EMISFACT L0001070     HROFDY 0.0 1.0 1.0 1.0 1.0 1.0
EMISFACT L0001070     HROFDY 1.0 1.0 1.0 1.0 1.0 1.0
EMISFACT L0001070     HROFDY 1.0 0.0 0.0 0.0 0.0 0.0
EMISFACT L0001071     HROFDY 0.0 0.0 0.0 0.0 0.0 0.0
EMISFACT L0001071     HROFDY 0.0 1.0 1.0 1.0 1.0 1.0
EMISFACT L0001071     HROFDY 1.0 1.0 1.0 1.0 1.0 1.0
EMISFACT L0001071     HROFDY 1.0 0.0 0.0 0.0 0.0 0.0
EMISFACT L0001072     HROFDY 0.0 0.0 0.0 0.0 0.0 0.0
EMISFACT L0001072     HROFDY 0.0 1.0 1.0 1.0 1.0 1.0
EMISFACT L0001072     HROFDY 1.0 1.0 1.0 1.0 1.0 1.0
EMISFACT L0001072     HROFDY 1.0 0.0 0.0 0.0 0.0 0.0
EMISFACT L0001073     HROFDY 0.0 0.0 0.0 0.0 0.0 0.0
EMISFACT L0001073     HROFDY 0.0 1.0 1.0 1.0 1.0 1.0
EMISFACT L0001073     HROFDY 1.0 1.0 1.0 1.0 1.0 1.0
EMISFACT L0001073     HROFDY 1.0 0.0 0.0 0.0 0.0 0.0
EMISFACT L0001074     HROFDY 0.0 0.0 0.0 0.0 0.0 0.0
EMISFACT L0001074     HROFDY 0.0 1.0 1.0 1.0 1.0 1.0
EMISFACT L0001074     HROFDY 1.0 1.0 1.0 1.0 1.0 1.0
EMISFACT L0001074     HROFDY 1.0 0.0 0.0 0.0 0.0 0.0
EMISFACT L0001075     HROFDY 0.0 0.0 0.0 0.0 0.0 0.0
EMISFACT L0001075     HROFDY 0.0 1.0 1.0 1.0 1.0 1.0
EMISFACT L0001075     HROFDY 1.0 1.0 1.0 1.0 1.0 1.0
EMISFACT L0001075     HROFDY 1.0 0.0 0.0 0.0 0.0 0.0
EMISFACT L0001076     HROFDY 0.0 0.0 0.0 0.0 0.0 0.0
EMISFACT L0001076     HROFDY 0.0 1.0 1.0 1.0 1.0 1.0
EMISFACT L0001076     HROFDY 1.0 1.0 1.0 1.0 1.0 1.0
EMISFACT L0001076     HROFDY 1.0 0.0 0.0 0.0 0.0 0.0
EMISFACT L0001077     HROFDY 0.0 0.0 0.0 0.0 0.0 0.0
EMISFACT L0001077     HROFDY 0.0 1.0 1.0 1.0 1.0 1.0
EMISFACT L0001077     HROFDY 1.0 1.0 1.0 1.0 1.0 1.0
EMISFACT L0001077     HROFDY 1.0 0.0 0.0 0.0 0.0 0.0
EMISFACT L0001078     HROFDY 0.0 0.0 0.0 0.0 0.0 0.0
EMISFACT L0001078     HROFDY 0.0 1.0 1.0 1.0 1.0 1.0
EMISFACT L0001078     HROFDY 1.0 1.0 1.0 1.0 1.0 1.0
EMISFACT L0001078     HROFDY 1.0 0.0 0.0 0.0 0.0 0.0
EMISFACT L0001079     HROFDY 0.0 0.0 0.0 0.0 0.0 0.0
EMISFACT L0001079     HROFDY 0.0 1.0 1.0 1.0 1.0 1.0
EMISFACT L0001079     HROFDY 1.0 1.0 1.0 1.0 1.0 1.0
EMISFACT L0001079     HROFDY 1.0 0.0 0.0 0.0 0.0 0.0
EMISFACT L0001080     HROFDY 0.0 0.0 0.0 0.0 0.0 0.0
EMISFACT L0001080     HROFDY 0.0 1.0 1.0 1.0 1.0 1.0
EMISFACT L0001080     HROFDY 1.0 1.0 1.0 1.0 1.0 1.0
EMISFACT L0001080     HROFDY 1.0 0.0 0.0 0.0 0.0 0.0
EMISFACT L0001081     HROFDY 0.0 0.0 0.0 0.0 0.0 0.0
EMISFACT L0001081     HROFDY 0.0 1.0 1.0 1.0 1.0 1.0
EMISFACT L0001081     HROFDY 1.0 1.0 1.0 1.0 1.0 1.0
EMISFACT L0001081     HROFDY 1.0 0.0 0.0 0.0 0.0 0.0
EMISFACT L0001082     HROFDY 0.0 0.0 0.0 0.0 0.0 0.0
EMISFACT L0001082     HROFDY 0.0 1.0 1.0 1.0 1.0 1.0
EMISFACT L0001082     HROFDY 1.0 1.0 1.0 1.0 1.0 1.0
EMISFACT L0001082     HROFDY 1.0 0.0 0.0 0.0 0.0 0.0
EMISFACT L0001083     HROFDY 0.0 0.0 0.0 0.0 0.0 0.0
EMISFACT L0001083     HROFDY 0.0 1.0 1.0 1.0 1.0 1.0
EMISFACT L0001083     HROFDY 1.0 1.0 1.0 1.0 1.0 1.0
EMISFACT L0001083     HROFDY 1.0 0.0 0.0 0.0 0.0 0.0
EMISFACT L0001084     HROFDY 0.0 0.0 0.0 0.0 0.0 0.0
EMISFACT L0001084     HROFDY 0.0 1.0 1.0 1.0 1.0 1.0
EMISFACT L0001084     HROFDY 1.0 1.0 1.0 1.0 1.0 1.0
EMISFACT L0001084     HROFDY 1.0 0.0 0.0 0.0 0.0 0.0
EMISFACT L0001085     HROFDY 0.0 0.0 0.0 0.0 0.0 0.0
EMISFACT L0001085     HROFDY 0.0 1.0 1.0 1.0 1.0 1.0
EMISFACT L0001085     HROFDY 1.0 1.0 1.0 1.0 1.0 1.0
EMISFACT L0001085     HROFDY 1.0 0.0 0.0 0.0 0.0 0.0
```

```
EMISFACT L0001086     HROFDY 0.0 0.0 0.0 0.0 0.0 0.0
EMISFACT L0001086     HROFDY 0.0 1.0 1.0 1.0 1.0 1.0
EMISFACT L0001086     HROFDY 1.0 1.0 1.0 1.0 1.0 1.0
EMISFACT L0001086     HROFDY 1.0 0.0 0.0 0.0 0.0 0.0
EMISFACT L0001087     HROFDY 0.0 0.0 0.0 0.0 0.0 0.0
EMISFACT L0001087     HROFDY 0.0 1.0 1.0 1.0 1.0 1.0
EMISFACT L0001087     HROFDY 1.0 1.0 1.0 1.0 1.0 1.0
EMISFACT L0001087     HROFDY 1.0 0.0 0.0 0.0 0.0 0.0
EMISFACT L0001088     HROFDY 0.0 0.0 0.0 0.0 0.0 0.0
EMISFACT L0001088     HROFDY 0.0 1.0 1.0 1.0 1.0 1.0
EMISFACT L0001088     HROFDY 1.0 1.0 1.0 1.0 1.0 1.0
EMISFACT L0001088     HROFDY 1.0 0.0 0.0 0.0 0.0 0.0
EMISFACT L0001089     HROFDY 0.0 0.0 0.0 0.0 0.0 0.0
EMISFACT L0001089     HROFDY 0.0 1.0 1.0 1.0 1.0 1.0
EMISFACT L0001089     HROFDY 1.0 1.0 1.0 1.0 1.0 1.0
EMISFACT L0001089     HROFDY 1.0 0.0 0.0 0.0 0.0 0.0
EMISFACT L0001090     HROFDY 0.0 0.0 0.0 0.0 0.0 0.0
EMISFACT L0001090     HROFDY 0.0 1.0 1.0 1.0 1.0 1.0
EMISFACT L0001090     HROFDY 1.0 1.0 1.0 1.0 1.0 1.0
EMISFACT L0001090     HROFDY 1.0 0.0 0.0 0.0 0.0 0.0
EMISFACT L0001091     HROFDY 0.0 0.0 0.0 0.0 0.0 0.0
EMISFACT L0001091     HROFDY 0.0 1.0 1.0 1.0 1.0 1.0
EMISFACT L0001091     HROFDY 1.0 1.0 1.0 1.0 1.0 1.0
EMISFACT L0001091     HROFDY 1.0 0.0 0.0 0.0 0.0 0.0
EMISFACT L0001092     HROFDY 0.0 0.0 0.0 0.0 0.0 0.0
EMISFACT L0001092     HROFDY 0.0 1.0 1.0 1.0 1.0 1.0
EMISFACT L0001092     HROFDY 1.0 1.0 1.0 1.0 1.0 1.0
EMISFACT L0001092     HROFDY 1.0 0.0 0.0 0.0 0.0 0.0
EMISFACT L0001093     HROFDY 0.0 0.0 0.0 0.0 0.0 0.0
EMISFACT L0001093     HROFDY 0.0 1.0 1.0 1.0 1.0 1.0
EMISFACT L0001093     HROFDY 1.0 1.0 1.0 1.0 1.0 1.0
EMISFACT L0001093     HROFDY 1.0 0.0 0.0 0.0 0.0 0.0
EMISFACT L0001094     HROFDY 0.0 0.0 0.0 0.0 0.0 0.0
EMISFACT L0001094     HROFDY 0.0 1.0 1.0 1.0 1.0 1.0
EMISFACT L0001094     HROFDY 1.0 1.0 1.0 1.0 1.0 1.0
EMISFACT L0001094     HROFDY 1.0 0.0 0.0 0.0 0.0 0.0
EMISFACT L0001095     HROFDY 0.0 0.0 0.0 0.0 0.0 0.0
EMISFACT L0001095     HROFDY 0.0 1.0 1.0 1.0 1.0 1.0
EMISFACT L0001095     HROFDY 1.0 1.0 1.0 1.0 1.0 1.0
EMISFACT L0001095     HROFDY 1.0 0.0 0.0 0.0 0.0 0.0
EMISFACT L0001096     HROFDY 0.0 0.0 0.0 0.0 0.0 0.0
EMISFACT L0001096     HROFDY 0.0 1.0 1.0 1.0 1.0 1.0
EMISFACT L0001096     HROFDY 1.0 1.0 1.0 1.0 1.0 1.0
EMISFACT L0001096     HROFDY 1.0 0.0 0.0 0.0 0.0 0.0
EMISFACT L0001097     HROFDY 0.0 0.0 0.0 0.0 0.0 0.0
EMISFACT L0001097     HROFDY 0.0 1.0 1.0 1.0 1.0 1.0
EMISFACT L0001097     HROFDY 1.0 1.0 1.0 1.0 1.0 1.0
EMISFACT L0001097     HROFDY 1.0 0.0 0.0 0.0 0.0 0.0
EMISFACT L0001098     HROFDY 0.0 0.0 0.0 0.0 0.0 0.0
EMISFACT L0001098     HROFDY 0.0 1.0 1.0 1.0 1.0 1.0
EMISFACT L0001098     HROFDY 1.0 1.0 1.0 1.0 1.0 1.0
EMISFACT L0001098     HROFDY 1.0 0.0 0.0 0.0 0.0 0.0
EMISFACT L0001099     HROFDY 0.0 0.0 0.0 0.0 0.0 0.0
EMISFACT L0001099     HROFDY 0.0 1.0 1.0 1.0 1.0 1.0
EMISFACT L0001099     HROFDY 1.0 1.0 1.0 1.0 1.0 1.0
EMISFACT L0001099     HROFDY 1.0 0.0 0.0 0.0 0.0 0.0
EMISFACT L0001100     HROFDY 0.0 0.0 0.0 0.0 0.0 0.0
EMISFACT L0001100     HROFDY 0.0 1.0 1.0 1.0 1.0 1.0
EMISFACT L0001100     HROFDY 1.0 1.0 1.0 1.0 1.0 1.0
EMISFACT L0001100     HROFDY 1.0 0.0 0.0 0.0 0.0 0.0
EMISFACT L0001101     HROFDY 0.0 0.0 0.0 0.0 0.0 0.0
EMISFACT L0001101     HROFDY 0.0 1.0 1.0 1.0 1.0 1.0
EMISFACT L0001101     HROFDY 1.0 1.0 1.0 1.0 1.0 1.0
EMISFACT L0001101     HROFDY 1.0 0.0 0.0 0.0 0.0 0.0
EMISFACT L0001102     HROFDY 0.0 0.0 0.0 0.0 0.0 0.0
EMISFACT L0001102     HROFDY 0.0 1.0 1.0 1.0 1.0 1.0
EMISFACT L0001102     HROFDY 1.0 1.0 1.0 1.0 1.0 1.0
EMISFACT L0001102     HROFDY 1.0 0.0 0.0 0.0 0.0 0.0
EMISFACT L0001103     HROFDY 0.0 0.0 0.0 0.0 0.0 0.0
EMISFACT L0001103     HROFDY 0.0 1.0 1.0 1.0 1.0 1.0
EMISFACT L0001103     HROFDY 1.0 1.0 1.0 1.0 1.0 1.0
EMISFACT L0001103     HROFDY 1.0 0.0 0.0 0.0 0.0 0.0
EMISFACT L0001104     HROFDY 0.0 0.0 0.0 0.0 0.0 0.0
EMISFACT L0001104     HROFDY 0.0 1.0 1.0 1.0 1.0 1.0
EMISFACT L0001104     HROFDY 1.0 1.0 1.0 1.0 1.0 1.0
EMISFACT L0001104     HROFDY 1.0 0.0 0.0 0.0 0.0 0.0
```

```
EMISFACT L0001105     HROFDY 0.0 0.0 0.0 0.0 0.0 0.0
EMISFACT L0001105     HROFDY 0.0 1.0 1.0 1.0 1.0 1.0
EMISFACT L0001105     HROFDY 1.0 1.0 1.0 1.0 1.0 1.0
EMISFACT L0001105     HROFDY 1.0 0.0 0.0 0.0 0.0 0.0
EMISFACT L0001106     HROFDY 0.0 0.0 0.0 0.0 0.0 0.0
EMISFACT L0001106     HROFDY 0.0 1.0 1.0 1.0 1.0 1.0
EMISFACT L0001106     HROFDY 1.0 1.0 1.0 1.0 1.0 1.0
EMISFACT L0001106     HROFDY 1.0 0.0 0.0 0.0 0.0 0.0
EMISFACT L0001107     HROFDY 0.0 0.0 0.0 0.0 0.0 0.0
EMISFACT L0001107     HROFDY 0.0 1.0 1.0 1.0 1.0 1.0
EMISFACT L0001107     HROFDY 1.0 1.0 1.0 1.0 1.0 1.0
EMISFACT L0001107     HROFDY 1.0 0.0 0.0 0.0 0.0 0.0
EMISFACT L0001108     HROFDY 0.0 0.0 0.0 0.0 0.0 0.0
EMISFACT L0001108     HROFDY 0.0 1.0 1.0 1.0 1.0 1.0
EMISFACT L0001108     HROFDY 1.0 1.0 1.0 1.0 1.0 1.0
EMISFACT L0001108     HROFDY 1.0 0.0 0.0 0.0 0.0 0.0
EMISFACT L0001109     HROFDY 0.0 0.0 0.0 0.0 0.0 0.0
EMISFACT L0001109     HROFDY 0.0 1.0 1.0 1.0 1.0 1.0
EMISFACT L0001109     HROFDY 1.0 1.0 1.0 1.0 1.0 1.0
EMISFACT L0001109     HROFDY 1.0 0.0 0.0 0.0 0.0 0.0
EMISFACT L0001110     HROFDY 0.0 0.0 0.0 0.0 0.0 0.0
EMISFACT L0001110     HROFDY 0.0 1.0 1.0 1.0 1.0 1.0
EMISFACT L0001110     HROFDY 1.0 1.0 1.0 1.0 1.0 1.0
EMISFACT L0001110     HROFDY 1.0 0.0 0.0 0.0 0.0 0.0
EMISFACT L0001111     HROFDY 0.0 0.0 0.0 0.0 0.0 0.0
EMISFACT L0001111     HROFDY 0.0 1.0 1.0 1.0 1.0 1.0
EMISFACT L0001111     HROFDY 1.0 1.0 1.0 1.0 1.0 1.0
EMISFACT L0001111     HROFDY 1.0 0.0 0.0 0.0 0.0 0.0
EMISFACT L0001112     HROFDY 0.0 0.0 0.0 0.0 0.0 0.0
EMISFACT L0001112     HROFDY 0.0 1.0 1.0 1.0 1.0 1.0
EMISFACT L0001112     HROFDY 1.0 1.0 1.0 1.0 1.0 1.0
EMISFACT L0001112     HROFDY 1.0 0.0 0.0 0.0 0.0 0.0
EMISFACT L0001113     HROFDY 0.0 0.0 0.0 0.0 0.0 0.0
EMISFACT L0001113     HROFDY 0.0 1.0 1.0 1.0 1.0 1.0
EMISFACT L0001113     HROFDY 1.0 1.0 1.0 1.0 1.0 1.0
EMISFACT L0001113     HROFDY 1.0 0.0 0.0 0.0 0.0 0.0
EMISFACT L0001114     HROFDY 0.0 0.0 0.0 0.0 0.0 0.0
EMISFACT L0001114     HROFDY 0.0 1.0 1.0 1.0 1.0 1.0
EMISFACT L0001114     HROFDY 1.0 1.0 1.0 1.0 1.0 1.0
EMISFACT L0001114     HROFDY 1.0 0.0 0.0 0.0 0.0 0.0
EMISFACT L0001115     HROFDY 0.0 0.0 0.0 0.0 0.0 0.0
EMISFACT L0001115     HROFDY 0.0 1.0 1.0 1.0 1.0 1.0
EMISFACT L0001115     HROFDY 1.0 1.0 1.0 1.0 1.0 1.0
EMISFACT L0001115     HROFDY 1.0 0.0 0.0 0.0 0.0 0.0
EMISFACT L0001116     HROFDY 0.0 0.0 0.0 0.0 0.0 0.0
EMISFACT L0001116     HROFDY 0.0 1.0 1.0 1.0 1.0 1.0
EMISFACT L0001116     HROFDY 1.0 1.0 1.0 1.0 1.0 1.0
EMISFACT L0001116     HROFDY 1.0 0.0 0.0 0.0 0.0 0.0
EMISFACT L0001117     HROFDY 0.0 0.0 0.0 0.0 0.0 0.0
EMISFACT L0001117     HROFDY 0.0 1.0 1.0 1.0 1.0 1.0
EMISFACT L0001117     HROFDY 1.0 1.0 1.0 1.0 1.0 1.0
EMISFACT L0001117     HROFDY 1.0 0.0 0.0 0.0 0.0 0.0
EMISFACT L0001118     HROFDY 0.0 0.0 0.0 0.0 0.0 0.0
EMISFACT L0001118     HROFDY 0.0 1.0 1.0 1.0 1.0 1.0
EMISFACT L0001118     HROFDY 1.0 1.0 1.0 1.0 1.0 1.0
EMISFACT L0001118     HROFDY 1.0 0.0 0.0 0.0 0.0 0.0
EMISFACT L0001119     HROFDY 0.0 0.0 0.0 0.0 0.0 0.0
EMISFACT L0001119     HROFDY 0.0 1.0 1.0 1.0 1.0 1.0
EMISFACT L0001119     HROFDY 1.0 1.0 1.0 1.0 1.0 1.0
EMISFACT L0001119     HROFDY 1.0 0.0 0.0 0.0 0.0 0.0
EMISFACT L0001120     HROFDY 0.0 0.0 0.0 0.0 0.0 0.0
EMISFACT L0001120     HROFDY 0.0 1.0 1.0 1.0 1.0 1.0
EMISFACT L0001120     HROFDY 1.0 1.0 1.0 1.0 1.0 1.0
EMISFACT L0001120     HROFDY 1.0 0.0 0.0 0.0 0.0 0.0
EMISFACT L0001121     HROFDY 0.0 0.0 0.0 0.0 0.0 0.0
EMISFACT L0001121     HROFDY 0.0 1.0 1.0 1.0 1.0 1.0
EMISFACT L0001121     HROFDY 1.0 1.0 1.0 1.0 1.0 1.0
EMISFACT L0001121     HROFDY 1.0 0.0 0.0 0.0 0.0 0.0
EMISFACT L0001122     HROFDY 0.0 0.0 0.0 0.0 0.0 0.0
EMISFACT L0001122     HROFDY 0.0 1.0 1.0 1.0 1.0 1.0
EMISFACT L0001122     HROFDY 1.0 1.0 1.0 1.0 1.0 1.0
EMISFACT L0001122     HROFDY 1.0 0.0 0.0 0.0 0.0 0.0
EMISFACT L0001123     HROFDY 0.0 0.0 0.0 0.0 0.0 0.0
EMISFACT L0001123     HROFDY 0.0 1.0 1.0 1.0 1.0 1.0
EMISFACT L0001123     HROFDY 1.0 1.0 1.0 1.0 1.0 1.0
EMISFACT L0001123     HROFDY 1.0 0.0 0.0 0.0 0.0 0.0
```

```
EMISFACT L0001124     HROFDY 0.0 0.0 0.0 0.0 0.0 0.0
EMISFACT L0001124     HROFDY 0.0 1.0 1.0 1.0 1.0 1.0
EMISFACT L0001124     HROFDY 1.0 1.0 1.0 1.0 1.0 1.0
EMISFACT L0001124     HROFDY 1.0 0.0 0.0 0.0 0.0 0.0
EMISFACT L0001125     HROFDY 0.0 0.0 0.0 0.0 0.0 0.0
EMISFACT L0001125     HROFDY 0.0 1.0 1.0 1.0 1.0 1.0
EMISFACT L0001125     HROFDY 1.0 1.0 1.0 1.0 1.0 1.0
EMISFACT L0001125     HROFDY 1.0 0.0 0.0 0.0 0.0 0.0
EMISFACT L0001126     HROFDY 0.0 0.0 0.0 0.0 0.0 0.0
EMISFACT L0001126     HROFDY 0.0 1.0 1.0 1.0 1.0 1.0
EMISFACT L0001126     HROFDY 1.0 1.0 1.0 1.0 1.0 1.0
EMISFACT L0001126     HROFDY 1.0 0.0 0.0 0.0 0.0 0.0
EMISFACT L0001127     HROFDY 0.0 0.0 0.0 0.0 0.0 0.0
EMISFACT L0001127     HROFDY 0.0 1.0 1.0 1.0 1.0 1.0
EMISFACT L0001127     HROFDY 1.0 1.0 1.0 1.0 1.0 1.0
EMISFACT L0001127     HROFDY 1.0 0.0 0.0 0.0 0.0 0.0
EMISFACT L0001128     HROFDY 0.0 0.0 0.0 0.0 0.0 0.0
EMISFACT L0001128     HROFDY 0.0 1.0 1.0 1.0 1.0 1.0
EMISFACT L0001128     HROFDY 1.0 1.0 1.0 1.0 1.0 1.0
EMISFACT L0001128     HROFDY 1.0 0.0 0.0 0.0 0.0 0.0
EMISFACT L0001129     HROFDY 0.0 0.0 0.0 0.0 0.0 0.0
EMISFACT L0001129     HROFDY 0.0 1.0 1.0 1.0 1.0 1.0
EMISFACT L0001129     HROFDY 1.0 1.0 1.0 1.0 1.0 1.0
EMISFACT L0001129     HROFDY 1.0 0.0 0.0 0.0 0.0 0.0
EMISFACT L0001130     HROFDY 0.0 0.0 0.0 0.0 0.0 0.0
EMISFACT L0001130     HROFDY 0.0 1.0 1.0 1.0 1.0 1.0
EMISFACT L0001130     HROFDY 1.0 1.0 1.0 1.0 1.0 1.0
EMISFACT L0001130     HROFDY 1.0 0.0 0.0 0.0 0.0 0.0
EMISFACT L0001131     HROFDY 0.0 0.0 0.0 0.0 0.0 0.0
EMISFACT L0001131     HROFDY 0.0 1.0 1.0 1.0 1.0 1.0
EMISFACT L0001131     HROFDY 1.0 1.0 1.0 1.0 1.0 1.0
EMISFACT L0001131     HROFDY 1.0 0.0 0.0 0.0 0.0 0.0
EMISFACT L0001132     HROFDY 0.0 0.0 0.0 0.0 0.0 0.0
EMISFACT L0001132     HROFDY 0.0 1.0 1.0 1.0 1.0 1.0
EMISFACT L0001132     HROFDY 1.0 1.0 1.0 1.0 1.0 1.0
EMISFACT L0001132     HROFDY 1.0 0.0 0.0 0.0 0.0 0.0
EMISFACT L0001133     HROFDY 0.0 0.0 0.0 0.0 0.0 0.0
EMISFACT L0001133     HROFDY 0.0 1.0 1.0 1.0 1.0 1.0
EMISFACT L0001133     HROFDY 1.0 1.0 1.0 1.0 1.0 1.0
EMISFACT L0001133     HROFDY 1.0 0.0 0.0 0.0 0.0 0.0
EMISFACT L0001134     HROFDY 0.0 0.0 0.0 0.0 0.0 0.0
EMISFACT L0001134     HROFDY 0.0 1.0 1.0 1.0 1.0 1.0
EMISFACT L0001134     HROFDY 1.0 1.0 1.0 1.0 1.0 1.0
EMISFACT L0001134     HROFDY 1.0 0.0 0.0 0.0 0.0 0.0
EMISFACT L0001135     HROFDY 0.0 0.0 0.0 0.0 0.0 0.0
EMISFACT L0001135     HROFDY 0.0 1.0 1.0 1.0 1.0 1.0
EMISFACT L0001135     HROFDY 1.0 1.0 1.0 1.0 1.0 1.0
EMISFACT L0001135     HROFDY 1.0 0.0 0.0 0.0 0.0 0.0
EMISFACT L0001136     HROFDY 0.0 0.0 0.0 0.0 0.0 0.0
EMISFACT L0001136     HROFDY 0.0 1.0 1.0 1.0 1.0 1.0
EMISFACT L0001136     HROFDY 1.0 1.0 1.0 1.0 1.0 1.0
EMISFACT L0001136     HROFDY 1.0 0.0 0.0 0.0 0.0 0.0
EMISFACT L0001137     HROFDY 0.0 0.0 0.0 0.0 0.0 0.0
EMISFACT L0001137     HROFDY 0.0 1.0 1.0 1.0 1.0 1.0
EMISFACT L0001137     HROFDY 1.0 1.0 1.0 1.0 1.0 1.0
EMISFACT L0001137     HROFDY 1.0 0.0 0.0 0.0 0.0 0.0
EMISFACT L0001138     HROFDY 0.0 0.0 0.0 0.0 0.0 0.0
EMISFACT L0001138     HROFDY 0.0 1.0 1.0 1.0 1.0 1.0
EMISFACT L0001138     HROFDY 1.0 1.0 1.0 1.0 1.0 1.0
EMISFACT L0001138     HROFDY 1.0 0.0 0.0 0.0 0.0 0.0
EMISFACT L0001139     HROFDY 0.0 0.0 0.0 0.0 0.0 0.0
EMISFACT L0001139     HROFDY 0.0 1.0 1.0 1.0 1.0 1.0
EMISFACT L0001139     HROFDY 1.0 1.0 1.0 1.0 1.0 1.0
EMISFACT L0001139     HROFDY 1.0 0.0 0.0 0.0 0.0 0.0
EMISFACT L0001140     HROFDY 0.0 0.0 0.0 0.0 0.0 0.0
EMISFACT L0001140     HROFDY 0.0 1.0 1.0 1.0 1.0 1.0
EMISFACT L0001140     HROFDY 1.0 1.0 1.0 1.0 1.0 1.0
EMISFACT L0001140     HROFDY 1.0 0.0 0.0 0.0 0.0 0.0
EMISFACT L0001141     HROFDY 0.0 0.0 0.0 0.0 0.0 0.0
EMISFACT L0001141     HROFDY 0.0 1.0 1.0 1.0 1.0 1.0
EMISFACT L0001141     HROFDY 1.0 1.0 1.0 1.0 1.0 1.0
EMISFACT L0001141     HROFDY 1.0 0.0 0.0 0.0 0.0 0.0
EMISFACT L0001142     HROFDY 0.0 0.0 0.0 0.0 0.0 0.0
EMISFACT L0001142     HROFDY 0.0 1.0 1.0 1.0 1.0 1.0
EMISFACT L0001142     HROFDY 1.0 1.0 1.0 1.0 1.0 1.0
EMISFACT L0001142     HROFDY 1.0 0.0 0.0 0.0 0.0 0.0
```

```
EMISFACT L0001143     HROFDY 0.0 0.0 0.0 0.0 0.0 0.0
EMISFACT L0001143     HROFDY 0.0 1.0 1.0 1.0 1.0 1.0
EMISFACT L0001143     HROFDY 1.0 1.0 1.0 1.0 1.0 1.0
EMISFACT L0001143     HROFDY 1.0 0.0 0.0 0.0 0.0 0.0
EMISFACT L0001144     HROFDY 0.0 0.0 0.0 0.0 0.0 0.0
EMISFACT L0001144     HROFDY 0.0 1.0 1.0 1.0 1.0 1.0
EMISFACT L0001144     HROFDY 1.0 1.0 1.0 1.0 1.0 1.0
EMISFACT L0001144     HROFDY 1.0 0.0 0.0 0.0 0.0 0.0
EMISFACT L0001145     HROFDY 0.0 0.0 0.0 0.0 0.0 0.0
EMISFACT L0001145     HROFDY 0.0 1.0 1.0 1.0 1.0 1.0
EMISFACT L0001145     HROFDY 1.0 1.0 1.0 1.0 1.0 1.0
EMISFACT L0001145     HROFDY 1.0 0.0 0.0 0.0 0.0 0.0
EMISFACT L0001146     HROFDY 0.0 0.0 0.0 0.0 0.0 0.0
EMISFACT L0001146     HROFDY 0.0 1.0 1.0 1.0 1.0 1.0
EMISFACT L0001146     HROFDY 1.0 1.0 1.0 1.0 1.0 1.0
EMISFACT L0001146     HROFDY 1.0 0.0 0.0 0.0 0.0 0.0
EMISFACT L0001147     HROFDY 0.0 0.0 0.0 0.0 0.0 0.0
EMISFACT L0001147     HROFDY 0.0 1.0 1.0 1.0 1.0 1.0
EMISFACT L0001147     HROFDY 1.0 1.0 1.0 1.0 1.0 1.0
EMISFACT L0001147     HROFDY 1.0 0.0 0.0 0.0 0.0 0.0
EMISFACT L0001148     HROFDY 0.0 0.0 0.0 0.0 0.0 0.0
EMISFACT L0001148     HROFDY 0.0 1.0 1.0 1.0 1.0 1.0
EMISFACT L0001148     HROFDY 1.0 1.0 1.0 1.0 1.0 1.0
EMISFACT L0001148     HROFDY 1.0 0.0 0.0 0.0 0.0 0.0
EMISFACT L0001149     HROFDY 0.0 0.0 0.0 0.0 0.0 0.0
EMISFACT L0001149     HROFDY 0.0 1.0 1.0 1.0 1.0 1.0
EMISFACT L0001149     HROFDY 1.0 1.0 1.0 1.0 1.0 1.0
EMISFACT L0001149     HROFDY 1.0 0.0 0.0 0.0 0.0 0.0
EMISFACT L0001150     HROFDY 0.0 0.0 0.0 0.0 0.0 0.0
EMISFACT L0001150     HROFDY 0.0 1.0 1.0 1.0 1.0 1.0
EMISFACT L0001150     HROFDY 1.0 1.0 1.0 1.0 1.0 1.0
EMISFACT L0001150     HROFDY 1.0 0.0 0.0 0.0 0.0 0.0
EMISFACT L0001151     HROFDY 0.0 0.0 0.0 0.0 0.0 0.0
EMISFACT L0001151     HROFDY 0.0 1.0 1.0 1.0 1.0 1.0
EMISFACT L0001151     HROFDY 1.0 1.0 1.0 1.0 1.0 1.0
EMISFACT L0001151     HROFDY 1.0 0.0 0.0 0.0 0.0 0.0
EMISFACT L0001152     HROFDY 0.0 0.0 0.0 0.0 0.0 0.0
EMISFACT L0001152     HROFDY 0.0 1.0 1.0 1.0 1.0 1.0
EMISFACT L0001152     HROFDY 1.0 1.0 1.0 1.0 1.0 1.0
EMISFACT L0001152     HROFDY 1.0 0.0 0.0 0.0 0.0 0.0
EMISFACT L0001153     HROFDY 0.0 0.0 0.0 0.0 0.0 0.0
EMISFACT L0001153     HROFDY 0.0 1.0 1.0 1.0 1.0 1.0
EMISFACT L0001153     HROFDY 1.0 1.0 1.0 1.0 1.0 1.0
EMISFACT L0001153     HROFDY 1.0 0.0 0.0 0.0 0.0 0.0
EMISFACT L0001154     HROFDY 0.0 0.0 0.0 0.0 0.0 0.0
EMISFACT L0001154     HROFDY 0.0 1.0 1.0 1.0 1.0 1.0
EMISFACT L0001154     HROFDY 1.0 1.0 1.0 1.0 1.0 1.0
EMISFACT L0001154     HROFDY 1.0 0.0 0.0 0.0 0.0 0.0
EMISFACT L0001155     HROFDY 0.0 0.0 0.0 0.0 0.0 0.0
EMISFACT L0001155     HROFDY 0.0 1.0 1.0 1.0 1.0 1.0
EMISFACT L0001155     HROFDY 1.0 1.0 1.0 1.0 1.0 1.0
EMISFACT L0001155     HROFDY 1.0 0.0 0.0 0.0 0.0 0.0
EMISFACT L0001156     HROFDY 0.0 0.0 0.0 0.0 0.0 0.0
EMISFACT L0001156     HROFDY 0.0 1.0 1.0 1.0 1.0 1.0
EMISFACT L0001156     HROFDY 1.0 1.0 1.0 1.0 1.0 1.0
EMISFACT L0001156     HROFDY 1.0 0.0 0.0 0.0 0.0 0.0
EMISFACT L0001157     HROFDY 0.0 0.0 0.0 0.0 0.0 0.0
EMISFACT L0001157     HROFDY 0.0 1.0 1.0 1.0 1.0 1.0
EMISFACT L0001157     HROFDY 1.0 1.0 1.0 1.0 1.0 1.0
EMISFACT L0001157     HROFDY 1.0 0.0 0.0 0.0 0.0 0.0
EMISFACT L0001158     HROFDY 0.0 0.0 0.0 0.0 0.0 0.0
EMISFACT L0001158     HROFDY 0.0 1.0 1.0 1.0 1.0 1.0
EMISFACT L0001158     HROFDY 1.0 1.0 1.0 1.0 1.0 1.0
EMISFACT L0001158     HROFDY 1.0 0.0 0.0 0.0 0.0 0.0
EMISFACT L0001159     HROFDY 0.0 0.0 0.0 0.0 0.0 0.0
EMISFACT L0001159     HROFDY 0.0 1.0 1.0 1.0 1.0 1.0
EMISFACT L0001159     HROFDY 1.0 1.0 1.0 1.0 1.0 1.0
EMISFACT L0001159     HROFDY 1.0 0.0 0.0 0.0 0.0 0.0
EMISFACT L0001160     HROFDY 0.0 0.0 0.0 0.0 0.0 0.0
EMISFACT L0001160     HROFDY 0.0 1.0 1.0 1.0 1.0 1.0
EMISFACT L0001160     HROFDY 1.0 1.0 1.0 1.0 1.0 1.0
EMISFACT L0001160     HROFDY 1.0 0.0 0.0 0.0 0.0 0.0
EMISFACT L0001161     HROFDY 0.0 0.0 0.0 0.0 0.0 0.0
EMISFACT L0001161     HROFDY 0.0 1.0 1.0 1.0 1.0 1.0
EMISFACT L0001161     HROFDY 1.0 1.0 1.0 1.0 1.0 1.0
EMISFACT L0001161     HROFDY 1.0 0.0 0.0 0.0 0.0 0.0
```

```
EMISFACT L0001162     HROFDY 0.0 0.0 0.0 0.0 0.0 0.0
EMISFACT L0001162     HROFDY 0.0 1.0 1.0 1.0 1.0 1.0
EMISFACT L0001162     HROFDY 1.0 1.0 1.0 1.0 1.0 1.0
EMISFACT L0001162     HROFDY 1.0 0.0 0.0 0.0 0.0 0.0
EMISFACT L0001163     HROFDY 0.0 0.0 0.0 0.0 0.0 0.0
EMISFACT L0001163     HROFDY 0.0 1.0 1.0 1.0 1.0 1.0
EMISFACT L0001163     HROFDY 1.0 1.0 1.0 1.0 1.0 1.0
EMISFACT L0001163     HROFDY 1.0 0.0 0.0 0.0 0.0 0.0
EMISFACT L0001164     HROFDY 0.0 0.0 0.0 0.0 0.0 0.0
EMISFACT L0001164     HROFDY 0.0 1.0 1.0 1.0 1.0 1.0
EMISFACT L0001164     HROFDY 1.0 1.0 1.0 1.0 1.0 1.0
EMISFACT L0001164     HROFDY 1.0 0.0 0.0 0.0 0.0 0.0
EMISFACT L0001165     HROFDY 0.0 0.0 0.0 0.0 0.0 0.0
EMISFACT L0001165     HROFDY 0.0 1.0 1.0 1.0 1.0 1.0
EMISFACT L0001165     HROFDY 1.0 1.0 1.0 1.0 1.0 1.0
EMISFACT L0001165     HROFDY 1.0 0.0 0.0 0.0 0.0 0.0
EMISFACT L0001166     HROFDY 0.0 0.0 0.0 0.0 0.0 0.0
EMISFACT L0001166     HROFDY 0.0 1.0 1.0 1.0 1.0 1.0
EMISFACT L0001166     HROFDY 1.0 1.0 1.0 1.0 1.0 1.0
EMISFACT L0001166     HROFDY 1.0 0.0 0.0 0.0 0.0 0.0
EMISFACT L0001167     HROFDY 0.0 0.0 0.0 0.0 0.0 0.0
EMISFACT L0001167     HROFDY 0.0 1.0 1.0 1.0 1.0 1.0
EMISFACT L0001167     HROFDY 1.0 1.0 1.0 1.0 1.0 1.0
EMISFACT L0001167     HROFDY 1.0 0.0 0.0 0.0 0.0 0.0
EMISFACT L0001168     HROFDY 0.0 0.0 0.0 0.0 0.0 0.0
EMISFACT L0001168     HROFDY 0.0 1.0 1.0 1.0 1.0 1.0
EMISFACT L0001168     HROFDY 1.0 1.0 1.0 1.0 1.0 1.0
EMISFACT L0001168     HROFDY 1.0 0.0 0.0 0.0 0.0 0.0
EMISFACT L0001169     HROFDY 0.0 0.0 0.0 0.0 0.0 0.0
EMISFACT L0001169     HROFDY 0.0 1.0 1.0 1.0 1.0 1.0
EMISFACT L0001169     HROFDY 1.0 1.0 1.0 1.0 1.0 1.0
EMISFACT L0001169     HROFDY 1.0 0.0 0.0 0.0 0.0 0.0
EMISFACT L0001170     HROFDY 0.0 0.0 0.0 0.0 0.0 0.0
EMISFACT L0001170     HROFDY 0.0 1.0 1.0 1.0 1.0 1.0
EMISFACT L0001170     HROFDY 1.0 1.0 1.0 1.0 1.0 1.0
EMISFACT L0001170     HROFDY 1.0 0.0 0.0 0.0 0.0 0.0
EMISFACT L0001171     HROFDY 0.0 0.0 0.0 0.0 0.0 0.0
EMISFACT L0001171     HROFDY 0.0 1.0 1.0 1.0 1.0 1.0
EMISFACT L0001171     HROFDY 1.0 1.0 1.0 1.0 1.0 1.0
EMISFACT L0001171     HROFDY 1.0 0.0 0.0 0.0 0.0 0.0
EMISFACT L0001172     HROFDY 0.0 0.0 0.0 0.0 0.0 0.0
EMISFACT L0001172     HROFDY 0.0 1.0 1.0 1.0 1.0 1.0
EMISFACT L0001172     HROFDY 1.0 1.0 1.0 1.0 1.0 1.0
EMISFACT L0001172     HROFDY 1.0 0.0 0.0 0.0 0.0 0.0
EMISFACT L0001173     HROFDY 0.0 0.0 0.0 0.0 0.0 0.0
EMISFACT L0001173     HROFDY 0.0 1.0 1.0 1.0 1.0 1.0
EMISFACT L0001173     HROFDY 1.0 1.0 1.0 1.0 1.0 1.0
EMISFACT L0001173     HROFDY 1.0 0.0 0.0 0.0 0.0 0.0
EMISFACT L0001174     HROFDY 0.0 0.0 0.0 0.0 0.0 0.0
EMISFACT L0001174     HROFDY 0.0 1.0 1.0 1.0 1.0 1.0
EMISFACT L0001174     HROFDY 1.0 1.0 1.0 1.0 1.0 1.0
EMISFACT L0001174     HROFDY 1.0 0.0 0.0 0.0 0.0 0.0
EMISFACT L0001175     HROFDY 0.0 0.0 0.0 0.0 0.0 0.0
EMISFACT L0001175     HROFDY 0.0 1.0 1.0 1.0 1.0 1.0
EMISFACT L0001175     HROFDY 1.0 1.0 1.0 1.0 1.0 1.0
EMISFACT L0001175     HROFDY 1.0 0.0 0.0 0.0 0.0 0.0
EMISFACT L0001176     HROFDY 0.0 0.0 0.0 0.0 0.0 0.0
EMISFACT L0001176     HROFDY 0.0 1.0 1.0 1.0 1.0 1.0
EMISFACT L0001176     HROFDY 1.0 1.0 1.0 1.0 1.0 1.0
EMISFACT L0001176     HROFDY 1.0 0.0 0.0 0.0 0.0 0.0
EMISFACT L0001177     HROFDY 0.0 0.0 0.0 0.0 0.0 0.0
EMISFACT L0001177     HROFDY 0.0 1.0 1.0 1.0 1.0 1.0
EMISFACT L0001177     HROFDY 1.0 1.0 1.0 1.0 1.0 1.0
EMISFACT L0001177     HROFDY 1.0 0.0 0.0 0.0 0.0 0.0
EMISFACT L0001178     HROFDY 0.0 0.0 0.0 0.0 0.0 0.0
EMISFACT L0001178     HROFDY 0.0 1.0 1.0 1.0 1.0 1.0
EMISFACT L0001178     HROFDY 1.0 1.0 1.0 1.0 1.0 1.0
EMISFACT L0001178     HROFDY 1.0 0.0 0.0 0.0 0.0 0.0
EMISFACT L0001179     HROFDY 0.0 0.0 0.0 0.0 0.0 0.0
EMISFACT L0001179     HROFDY 0.0 1.0 1.0 1.0 1.0 1.0
EMISFACT L0001179     HROFDY 1.0 1.0 1.0 1.0 1.0 1.0
EMISFACT L0001179     HROFDY 1.0 0.0 0.0 0.0 0.0 0.0
EMISFACT L0001180     HROFDY 0.0 0.0 0.0 0.0 0.0 0.0
EMISFACT L0001180     HROFDY 0.0 1.0 1.0 1.0 1.0 1.0
EMISFACT L0001180     HROFDY 1.0 1.0 1.0 1.0 1.0 1.0
EMISFACT L0001180     HROFDY 1.0 0.0 0.0 0.0 0.0 0.0
```

```
EMISFACT L0001181     HROFDY 0.0 0.0 0.0 0.0 0.0 0.0
EMISFACT L0001181     HROFDY 0.0 1.0 1.0 1.0 1.0 1.0
EMISFACT L0001181     HROFDY 1.0 1.0 1.0 1.0 1.0 1.0
EMISFACT L0001181     HROFDY 1.0 0.0 0.0 0.0 0.0 0.0
EMISFACT L0001182     HROFDY 0.0 0.0 0.0 0.0 0.0 0.0
EMISFACT L0001182     HROFDY 0.0 1.0 1.0 1.0 1.0 1.0
EMISFACT L0001182     HROFDY 1.0 1.0 1.0 1.0 1.0 1.0
EMISFACT L0001182     HROFDY 1.0 0.0 0.0 0.0 0.0 0.0
EMISFACT L0001183     HROFDY 0.0 0.0 0.0 0.0 0.0 0.0
EMISFACT L0001183     HROFDY 0.0 1.0 1.0 1.0 1.0 1.0
EMISFACT L0001183     HROFDY 1.0 1.0 1.0 1.0 1.0 1.0
EMISFACT L0001183     HROFDY 1.0 0.0 0.0 0.0 0.0 0.0
EMISFACT L0001184     HROFDY 0.0 0.0 0.0 0.0 0.0 0.0
EMISFACT L0001184     HROFDY 0.0 1.0 1.0 1.0 1.0 1.0
EMISFACT L0001184     HROFDY 1.0 1.0 1.0 1.0 1.0 1.0
EMISFACT L0001184     HROFDY 1.0 0.0 0.0 0.0 0.0 0.0
EMISFACT L0001185     HROFDY 0.0 0.0 0.0 0.0 0.0 0.0
EMISFACT L0001185     HROFDY 0.0 1.0 1.0 1.0 1.0 1.0
EMISFACT L0001185     HROFDY 1.0 1.0 1.0 1.0 1.0 1.0
EMISFACT L0001185     HROFDY 1.0 0.0 0.0 0.0 0.0 0.0
EMISFACT L0001186     HROFDY 0.0 0.0 0.0 0.0 0.0 0.0
EMISFACT L0001186     HROFDY 0.0 1.0 1.0 1.0 1.0 1.0
EMISFACT L0001186     HROFDY 1.0 1.0 1.0 1.0 1.0 1.0
EMISFACT L0001186     HROFDY 1.0 0.0 0.0 0.0 0.0 0.0
EMISFACT L0001187     HROFDY 0.0 0.0 0.0 0.0 0.0 0.0
EMISFACT L0001187     HROFDY 0.0 1.0 1.0 1.0 1.0 1.0
EMISFACT L0001187     HROFDY 1.0 1.0 1.0 1.0 1.0 1.0
EMISFACT L0001187     HROFDY 1.0 0.0 0.0 0.0 0.0 0.0
EMISFACT L0001188     HROFDY 0.0 0.0 0.0 0.0 0.0 0.0
EMISFACT L0001188     HROFDY 0.0 1.0 1.0 1.0 1.0 1.0
EMISFACT L0001188     HROFDY 1.0 1.0 1.0 1.0 1.0 1.0
EMISFACT L0001188     HROFDY 1.0 0.0 0.0 0.0 0.0 0.0
EMISFACT L0001189     HROFDY 0.0 0.0 0.0 0.0 0.0 0.0
EMISFACT L0001189     HROFDY 0.0 1.0 1.0 1.0 1.0 1.0
EMISFACT L0001189     HROFDY 1.0 1.0 1.0 1.0 1.0 1.0
EMISFACT L0001189     HROFDY 1.0 0.0 0.0 0.0 0.0 0.0
EMISFACT L0001190     HROFDY 0.0 0.0 0.0 0.0 0.0 0.0
EMISFACT L0001190     HROFDY 0.0 1.0 1.0 1.0 1.0 1.0
EMISFACT L0001190     HROFDY 1.0 1.0 1.0 1.0 1.0 1.0
EMISFACT L0001190     HROFDY 1.0 0.0 0.0 0.0 0.0 0.0
EMISFACT L0001191     HROFDY 0.0 0.0 0.0 0.0 0.0 0.0
EMISFACT L0001191     HROFDY 0.0 1.0 1.0 1.0 1.0 1.0
EMISFACT L0001191     HROFDY 1.0 1.0 1.0 1.0 1.0 1.0
EMISFACT L0001191     HROFDY 1.0 0.0 0.0 0.0 0.0 0.0
EMISFACT L0001192     HROFDY 0.0 0.0 0.0 0.0 0.0 0.0
EMISFACT L0001192     HROFDY 0.0 1.0 1.0 1.0 1.0 1.0
EMISFACT L0001192     HROFDY 1.0 1.0 1.0 1.0 1.0 1.0
EMISFACT L0001192     HROFDY 1.0 0.0 0.0 0.0 0.0 0.0
EMISFACT L0001193     HROFDY 0.0 0.0 0.0 0.0 0.0 0.0
EMISFACT L0001193     HROFDY 0.0 1.0 1.0 1.0 1.0 1.0
EMISFACT L0001193     HROFDY 1.0 1.0 1.0 1.0 1.0 1.0
EMISFACT L0001193     HROFDY 1.0 0.0 0.0 0.0 0.0 0.0
EMISFACT L0001194     HROFDY 0.0 0.0 0.0 0.0 0.0 0.0
EMISFACT L0001194     HROFDY 0.0 1.0 1.0 1.0 1.0 1.0
EMISFACT L0001194     HROFDY 1.0 1.0 1.0 1.0 1.0 1.0
EMISFACT L0001194     HROFDY 1.0 0.0 0.0 0.0 0.0 0.0
EMISFACT L0001195     HROFDY 0.0 0.0 0.0 0.0 0.0 0.0
EMISFACT L0001195     HROFDY 0.0 1.0 1.0 1.0 1.0 1.0
EMISFACT L0001195     HROFDY 1.0 1.0 1.0 1.0 1.0 1.0
EMISFACT L0001195     HROFDY 1.0 0.0 0.0 0.0 0.0 0.0
EMISFACT L0001196     HROFDY 0.0 0.0 0.0 0.0 0.0 0.0
EMISFACT L0001196     HROFDY 0.0 1.0 1.0 1.0 1.0 1.0
EMISFACT L0001196     HROFDY 1.0 1.0 1.0 1.0 1.0 1.0
EMISFACT L0001196     HROFDY 1.0 0.0 0.0 0.0 0.0 0.0
EMISFACT L0001197     HROFDY 0.0 0.0 0.0 0.0 0.0 0.0
EMISFACT L0001197     HROFDY 0.0 1.0 1.0 1.0 1.0 1.0
EMISFACT L0001197     HROFDY 1.0 1.0 1.0 1.0 1.0 1.0
EMISFACT L0001197     HROFDY 1.0 0.0 0.0 0.0 0.0 0.0
EMISFACT L0001198     HROFDY 0.0 0.0 0.0 0.0 0.0 0.0
EMISFACT L0001198     HROFDY 0.0 1.0 1.0 1.0 1.0 1.0
EMISFACT L0001198     HROFDY 1.0 1.0 1.0 1.0 1.0 1.0
EMISFACT L0001198     HROFDY 1.0 0.0 0.0 0.0 0.0 0.0
EMISFACT L0001199     HROFDY 0.0 0.0 0.0 0.0 0.0 0.0
EMISFACT L0001199     HROFDY 0.0 1.0 1.0 1.0 1.0 1.0
EMISFACT L0001199     HROFDY 1.0 1.0 1.0 1.0 1.0 1.0
EMISFACT L0001199     HROFDY 1.0 0.0 0.0 0.0 0.0 0.0
```

```
EMISFACT L0001200     HROFDY 0.0 0.0 0.0 0.0 0.0 0.0
EMISFACT L0001200     HROFDY 0.0 1.0 1.0 1.0 1.0 1.0
EMISFACT L0001200     HROFDY 1.0 1.0 1.0 1.0 1.0 1.0
EMISFACT L0001200     HROFDY 1.0 0.0 0.0 0.0 0.0 0.0
EMISFACT L0001201     HROFDY 0.0 0.0 0.0 0.0 0.0 0.0
EMISFACT L0001201     HROFDY 0.0 1.0 1.0 1.0 1.0 1.0
EMISFACT L0001201     HROFDY 1.0 1.0 1.0 1.0 1.0 1.0
EMISFACT L0001201     HROFDY 1.0 0.0 0.0 0.0 0.0 0.0
EMISFACT L0001202     HROFDY 0.0 0.0 0.0 0.0 0.0 0.0
EMISFACT L0001202     HROFDY 0.0 1.0 1.0 1.0 1.0 1.0
EMISFACT L0001202     HROFDY 1.0 1.0 1.0 1.0 1.0 1.0
EMISFACT L0001202     HROFDY 1.0 0.0 0.0 0.0 0.0 0.0
EMISFACT L0001203     HROFDY 0.0 0.0 0.0 0.0 0.0 0.0
EMISFACT L0001203     HROFDY 0.0 1.0 1.0 1.0 1.0 1.0
EMISFACT L0001203     HROFDY 1.0 1.0 1.0 1.0 1.0 1.0
EMISFACT L0001203     HROFDY 1.0 0.0 0.0 0.0 0.0 0.0
EMISFACT L0001204     HROFDY 0.0 0.0 0.0 0.0 0.0 0.0
EMISFACT L0001204     HROFDY 0.0 1.0 1.0 1.0 1.0 1.0
EMISFACT L0001204     HROFDY 1.0 1.0 1.0 1.0 1.0 1.0
EMISFACT L0001204     HROFDY 1.0 0.0 0.0 0.0 0.0 0.0
EMISFACT L0001205     HROFDY 0.0 0.0 0.0 0.0 0.0 0.0
EMISFACT L0001205     HROFDY 0.0 1.0 1.0 1.0 1.0 1.0
EMISFACT L0001205     HROFDY 1.0 1.0 1.0 1.0 1.0 1.0
EMISFACT L0001205     HROFDY 1.0 0.0 0.0 0.0 0.0 0.0
EMISFACT L0001206     HROFDY 0.0 0.0 0.0 0.0 0.0 0.0
EMISFACT L0001206     HROFDY 0.0 1.0 1.0 1.0 1.0 1.0
EMISFACT L0001206     HROFDY 1.0 1.0 1.0 1.0 1.0 1.0
EMISFACT L0001206     HROFDY 1.0 0.0 0.0 0.0 0.0 0.0
EMISFACT L0001207     HROFDY 0.0 0.0 0.0 0.0 0.0 0.0
EMISFACT L0001207     HROFDY 0.0 1.0 1.0 1.0 1.0 1.0
EMISFACT L0001207     HROFDY 1.0 1.0 1.0 1.0 1.0 1.0
EMISFACT L0001207     HROFDY 1.0 0.0 0.0 0.0 0.0 0.0
EMISFACT L0001208     HROFDY 0.0 0.0 0.0 0.0 0.0 0.0
EMISFACT L0001208     HROFDY 0.0 1.0 1.0 1.0 1.0 1.0
EMISFACT L0001208     HROFDY 1.0 1.0 1.0 1.0 1.0 1.0
EMISFACT L0001208     HROFDY 1.0 0.0 0.0 0.0 0.0 0.0
EMISFACT L0001209     HROFDY 0.0 0.0 0.0 0.0 0.0 0.0
EMISFACT L0001209     HROFDY 0.0 1.0 1.0 1.0 1.0 1.0
EMISFACT L0001209     HROFDY 1.0 1.0 1.0 1.0 1.0 1.0
EMISFACT L0001209     HROFDY 1.0 0.0 0.0 0.0 0.0 0.0
EMISFACT L0001210     HROFDY 0.0 0.0 0.0 0.0 0.0 0.0
EMISFACT L0001210     HROFDY 0.0 1.0 1.0 1.0 1.0 1.0
EMISFACT L0001210     HROFDY 1.0 1.0 1.0 1.0 1.0 1.0
EMISFACT L0001210     HROFDY 1.0 0.0 0.0 0.0 0.0 0.0
EMISFACT L0001211     HROFDY 0.0 0.0 0.0 0.0 0.0 0.0
EMISFACT L0001211     HROFDY 0.0 1.0 1.0 1.0 1.0 1.0
EMISFACT L0001211     HROFDY 1.0 1.0 1.0 1.0 1.0 1.0
EMISFACT L0001211     HROFDY 1.0 0.0 0.0 0.0 0.0 0.0
EMISFACT L0001212     HROFDY 0.0 0.0 0.0 0.0 0.0 0.0
EMISFACT L0001212     HROFDY 0.0 1.0 1.0 1.0 1.0 1.0
EMISFACT L0001212     HROFDY 1.0 1.0 1.0 1.0 1.0 1.0
EMISFACT L0001212     HROFDY 1.0 0.0 0.0 0.0 0.0 0.0
EMISFACT L0001213     HROFDY 0.0 0.0 0.0 0.0 0.0 0.0
EMISFACT L0001213     HROFDY 0.0 1.0 1.0 1.0 1.0 1.0
EMISFACT L0001213     HROFDY 1.0 1.0 1.0 1.0 1.0 1.0
EMISFACT L0001213     HROFDY 1.0 0.0 0.0 0.0 0.0 0.0
EMISFACT L0001214     HROFDY 0.0 0.0 0.0 0.0 0.0 0.0
EMISFACT L0001214     HROFDY 0.0 1.0 1.0 1.0 1.0 1.0
EMISFACT L0001214     HROFDY 1.0 1.0 1.0 1.0 1.0 1.0
EMISFACT L0001214     HROFDY 1.0 0.0 0.0 0.0 0.0 0.0
EMISFACT L0001215     HROFDY 0.0 0.0 0.0 0.0 0.0 0.0
EMISFACT L0001215     HROFDY 0.0 1.0 1.0 1.0 1.0 1.0
EMISFACT L0001215     HROFDY 1.0 1.0 1.0 1.0 1.0 1.0
EMISFACT L0001215     HROFDY 1.0 0.0 0.0 0.0 0.0 0.0
EMISFACT L0001216     HROFDY 0.0 0.0 0.0 0.0 0.0 0.0
EMISFACT L0001216     HROFDY 0.0 1.0 1.0 1.0 1.0 1.0
EMISFACT L0001216     HROFDY 1.0 1.0 1.0 1.0 1.0 1.0
EMISFACT L0001216     HROFDY 1.0 0.0 0.0 0.0 0.0 0.0
EMISFACT L0001217     HROFDY 0.0 0.0 0.0 0.0 0.0 0.0
EMISFACT L0001217     HROFDY 0.0 1.0 1.0 1.0 1.0 1.0
EMISFACT L0001217     HROFDY 1.0 1.0 1.0 1.0 1.0 1.0
EMISFACT L0001217     HROFDY 1.0 0.0 0.0 0.0 0.0 0.0
EMISFACT L0001218     HROFDY 0.0 0.0 0.0 0.0 0.0 0.0
EMISFACT L0001218     HROFDY 0.0 1.0 1.0 1.0 1.0 1.0
EMISFACT L0001218     HROFDY 1.0 1.0 1.0 1.0 1.0 1.0
EMISFACT L0001218     HROFDY 1.0 0.0 0.0 0.0 0.0 0.0
```

```
EMISFACT L0001219     HROFDY 0.0 0.0 0.0 0.0 0.0 0.0
EMISFACT L0001219     HROFDY 0.0 1.0 1.0 1.0 1.0 1.0
EMISFACT L0001219     HROFDY 1.0 1.0 1.0 1.0 1.0 1.0
EMISFACT L0001219     HROFDY 1.0 0.0 0.0 0.0 0.0 0.0
EMISFACT L0001220     HROFDY 0.0 0.0 0.0 0.0 0.0 0.0
EMISFACT L0001220     HROFDY 0.0 1.0 1.0 1.0 1.0 1.0
EMISFACT L0001220     HROFDY 1.0 1.0 1.0 1.0 1.0 1.0
EMISFACT L0001220     HROFDY 1.0 0.0 0.0 0.0 0.0 0.0
EMISFACT L0001221     HROFDY 0.0 0.0 0.0 0.0 0.0 0.0
EMISFACT L0001221     HROFDY 0.0 1.0 1.0 1.0 1.0 1.0
EMISFACT L0001221     HROFDY 1.0 1.0 1.0 1.0 1.0 1.0
EMISFACT L0001221     HROFDY 1.0 0.0 0.0 0.0 0.0 0.0
EMISFACT L0001222     HROFDY 0.0 0.0 0.0 0.0 0.0 0.0
EMISFACT L0001222     HROFDY 0.0 1.0 1.0 1.0 1.0 1.0
EMISFACT L0001222     HROFDY 1.0 1.0 1.0 1.0 1.0 1.0
EMISFACT L0001222     HROFDY 1.0 0.0 0.0 0.0 0.0 0.0
EMISFACT L0001223     HROFDY 0.0 0.0 0.0 0.0 0.0 0.0
EMISFACT L0001223     HROFDY 0.0 1.0 1.0 1.0 1.0 1.0
EMISFACT L0001223     HROFDY 1.0 1.0 1.0 1.0 1.0 1.0
EMISFACT L0001223     HROFDY 1.0 0.0 0.0 0.0 0.0 0.0
EMISFACT L0001224     HROFDY 0.0 0.0 0.0 0.0 0.0 0.0
EMISFACT L0001224     HROFDY 0.0 1.0 1.0 1.0 1.0 1.0
EMISFACT L0001224     HROFDY 1.0 1.0 1.0 1.0 1.0 1.0
EMISFACT L0001224     HROFDY 1.0 0.0 0.0 0.0 0.0 0.0
EMISFACT L0001225     HROFDY 0.0 0.0 0.0 0.0 0.0 0.0
EMISFACT L0001225     HROFDY 0.0 1.0 1.0 1.0 1.0 1.0
EMISFACT L0001225     HROFDY 1.0 1.0 1.0 1.0 1.0 1.0
EMISFACT L0001225     HROFDY 1.0 0.0 0.0 0.0 0.0 0.0
EMISFACT L0001226     HROFDY 0.0 0.0 0.0 0.0 0.0 0.0
EMISFACT L0001226     HROFDY 0.0 1.0 1.0 1.0 1.0 1.0
EMISFACT L0001226     HROFDY 1.0 1.0 1.0 1.0 1.0 1.0
EMISFACT L0001226     HROFDY 1.0 0.0 0.0 0.0 0.0 0.0
EMISFACT L0001227     HROFDY 0.0 0.0 0.0 0.0 0.0 0.0
EMISFACT L0001227     HROFDY 0.0 1.0 1.0 1.0 1.0 1.0
EMISFACT L0001227     HROFDY 1.0 1.0 1.0 1.0 1.0 1.0
EMISFACT L0001227     HROFDY 1.0 0.0 0.0 0.0 0.0 0.0
EMISFACT L0001228     HROFDY 0.0 0.0 0.0 0.0 0.0 0.0
EMISFACT L0001228     HROFDY 0.0 1.0 1.0 1.0 1.0 1.0
EMISFACT L0001228     HROFDY 1.0 1.0 1.0 1.0 1.0 1.0
EMISFACT L0001228     HROFDY 1.0 0.0 0.0 0.0 0.0 0.0
EMISFACT L0001229     HROFDY 0.0 0.0 0.0 0.0 0.0 0.0
EMISFACT L0001229     HROFDY 0.0 1.0 1.0 1.0 1.0 1.0
EMISFACT L0001229     HROFDY 1.0 1.0 1.0 1.0 1.0 1.0
EMISFACT L0001229     HROFDY 1.0 0.0 0.0 0.0 0.0 0.0
EMISFACT L0001230     HROFDY 0.0 0.0 0.0 0.0 0.0 0.0
EMISFACT L0001230     HROFDY 0.0 1.0 1.0 1.0 1.0 1.0
EMISFACT L0001230     HROFDY 1.0 1.0 1.0 1.0 1.0 1.0
EMISFACT L0001230     HROFDY 1.0 0.0 0.0 0.0 0.0 0.0
EMISFACT L0001231     HROFDY 0.0 0.0 0.0 0.0 0.0 0.0
EMISFACT L0001231     HROFDY 0.0 1.0 1.0 1.0 1.0 1.0
EMISFACT L0001231     HROFDY 1.0 1.0 1.0 1.0 1.0 1.0
EMISFACT L0001231     HROFDY 1.0 0.0 0.0 0.0 0.0 0.0
EMISFACT L0001232     HROFDY 0.0 0.0 0.0 0.0 0.0 0.0
EMISFACT L0001232     HROFDY 0.0 1.0 1.0 1.0 1.0 1.0
EMISFACT L0001232     HROFDY 1.0 1.0 1.0 1.0 1.0 1.0
EMISFACT L0001232     HROFDY 1.0 0.0 0.0 0.0 0.0 0.0
EMISFACT L0001233     HROFDY 0.0 0.0 0.0 0.0 0.0 0.0
EMISFACT L0001233     HROFDY 0.0 1.0 1.0 1.0 1.0 1.0
EMISFACT L0001233     HROFDY 1.0 1.0 1.0 1.0 1.0 1.0
EMISFACT L0001233     HROFDY 1.0 0.0 0.0 0.0 0.0 0.0
EMISFACT L0001234     HROFDY 0.0 0.0 0.0 0.0 0.0 0.0
EMISFACT L0001234     HROFDY 0.0 1.0 1.0 1.0 1.0 1.0
EMISFACT L0001234     HROFDY 1.0 1.0 1.0 1.0 1.0 1.0
EMISFACT L0001234     HROFDY 1.0 0.0 0.0 0.0 0.0 0.0
EMISFACT L0001235     HROFDY 0.0 0.0 0.0 0.0 0.0 0.0
EMISFACT L0001235     HROFDY 0.0 1.0 1.0 1.0 1.0 1.0
EMISFACT L0001235     HROFDY 1.0 1.0 1.0 1.0 1.0 1.0
EMISFACT L0001235     HROFDY 1.0 0.0 0.0 0.0 0.0 0.0
EMISFACT L0001236     HROFDY 0.0 0.0 0.0 0.0 0.0 0.0
EMISFACT L0001236     HROFDY 0.0 1.0 1.0 1.0 1.0 1.0
EMISFACT L0001236     HROFDY 1.0 1.0 1.0 1.0 1.0 1.0
EMISFACT L0001236     HROFDY 1.0 0.0 0.0 0.0 0.0 0.0
EMISFACT L0001237     HROFDY 0.0 0.0 0.0 0.0 0.0 0.0
EMISFACT L0001237     HROFDY 0.0 1.0 1.0 1.0 1.0 1.0
EMISFACT L0001237     HROFDY 1.0 1.0 1.0 1.0 1.0 1.0
EMISFACT L0001237     HROFDY 1.0 0.0 0.0 0.0 0.0 0.0
```

```
EMISFACT L0001238     HROFDY 0.0 0.0 0.0 0.0 0.0 0.0
EMISFACT L0001238     HROFDY 0.0 1.0 1.0 1.0 1.0 1.0
EMISFACT L0001238     HROFDY 1.0 1.0 1.0 1.0 1.0 1.0
EMISFACT L0001238     HROFDY 1.0 0.0 0.0 0.0 0.0 0.0
EMISFACT L0001239     HROFDY 0.0 0.0 0.0 0.0 0.0 0.0
EMISFACT L0001239     HROFDY 0.0 1.0 1.0 1.0 1.0 1.0
EMISFACT L0001239     HROFDY 1.0 1.0 1.0 1.0 1.0 1.0
EMISFACT L0001239     HROFDY 1.0 0.0 0.0 0.0 0.0 0.0
EMISFACT L0001240     HROFDY 0.0 0.0 0.0 0.0 0.0 0.0
EMISFACT L0001240     HROFDY 0.0 1.0 1.0 1.0 1.0 1.0
EMISFACT L0001240     HROFDY 1.0 1.0 1.0 1.0 1.0 1.0
EMISFACT L0001240     HROFDY 1.0 0.0 0.0 0.0 0.0 0.0
EMISFACT L0001241     HROFDY 0.0 0.0 0.0 0.0 0.0 0.0
EMISFACT L0001241     HROFDY 0.0 1.0 1.0 1.0 1.0 1.0
EMISFACT L0001241     HROFDY 1.0 1.0 1.0 1.0 1.0 1.0
EMISFACT L0001241     HROFDY 1.0 0.0 0.0 0.0 0.0 0.0
EMISFACT L0001242     HROFDY 0.0 0.0 0.0 0.0 0.0 0.0
EMISFACT L0001242     HROFDY 0.0 1.0 1.0 1.0 1.0 1.0
EMISFACT L0001242     HROFDY 1.0 1.0 1.0 1.0 1.0 1.0
EMISFACT L0001242     HROFDY 1.0 0.0 0.0 0.0 0.0 0.0
EMISFACT L0001243     HROFDY 0.0 0.0 0.0 0.0 0.0 0.0
EMISFACT L0001243     HROFDY 0.0 1.0 1.0 1.0 1.0 1.0
EMISFACT L0001243     HROFDY 1.0 1.0 1.0 1.0 1.0 1.0
EMISFACT L0001243     HROFDY 1.0 0.0 0.0 0.0 0.0 0.0
EMISFACT L0001244     HROFDY 0.0 0.0 0.0 0.0 0.0 0.0
EMISFACT L0001244     HROFDY 0.0 1.0 1.0 1.0 1.0 1.0
EMISFACT L0001244     HROFDY 1.0 1.0 1.0 1.0 1.0 1.0
EMISFACT L0001244     HROFDY 1.0 0.0 0.0 0.0 0.0 0.0
EMISFACT L0001245     HROFDY 0.0 0.0 0.0 0.0 0.0 0.0
EMISFACT L0001245     HROFDY 0.0 1.0 1.0 1.0 1.0 1.0
EMISFACT L0001245     HROFDY 1.0 1.0 1.0 1.0 1.0 1.0
EMISFACT L0001245     HROFDY 1.0 0.0 0.0 0.0 0.0 0.0
EMISFACT L0001246     HROFDY 0.0 0.0 0.0 0.0 0.0 0.0
EMISFACT L0001246     HROFDY 0.0 1.0 1.0 1.0 1.0 1.0
EMISFACT L0001246     HROFDY 1.0 1.0 1.0 1.0 1.0 1.0
EMISFACT L0001246     HROFDY 1.0 0.0 0.0 0.0 0.0 0.0
EMISFACT L0001247     HROFDY 0.0 0.0 0.0 0.0 0.0 0.0
EMISFACT L0001247     HROFDY 0.0 1.0 1.0 1.0 1.0 1.0
EMISFACT L0001247     HROFDY 1.0 1.0 1.0 1.0 1.0 1.0
EMISFACT L0001247     HROFDY 1.0 0.0 0.0 0.0 0.0 0.0
EMISFACT L0001248     HROFDY 0.0 0.0 0.0 0.0 0.0 0.0
EMISFACT L0001248     HROFDY 0.0 1.0 1.0 1.0 1.0 1.0
EMISFACT L0001248     HROFDY 1.0 1.0 1.0 1.0 1.0 1.0
EMISFACT L0001248     HROFDY 1.0 0.0 0.0 0.0 0.0 0.0
EMISFACT L0001249     HROFDY 0.0 0.0 0.0 0.0 0.0 0.0
EMISFACT L0001249     HROFDY 0.0 1.0 1.0 1.0 1.0 1.0
EMISFACT L0001249     HROFDY 1.0 1.0 1.0 1.0 1.0 1.0
EMISFACT L0001249     HROFDY 1.0 0.0 0.0 0.0 0.0 0.0
EMISFACT L0001250     HROFDY 0.0 0.0 0.0 0.0 0.0 0.0
EMISFACT L0001250     HROFDY 0.0 1.0 1.0 1.0 1.0 1.0
EMISFACT L0001250     HROFDY 1.0 1.0 1.0 1.0 1.0 1.0
EMISFACT L0001250     HROFDY 1.0 0.0 0.0 0.0 0.0 0.0
EMISFACT L0001251     HROFDY 0.0 0.0 0.0 0.0 0.0 0.0
EMISFACT L0001251     HROFDY 0.0 1.0 1.0 1.0 1.0 1.0
EMISFACT L0001251     HROFDY 1.0 1.0 1.0 1.0 1.0 1.0
EMISFACT L0001251     HROFDY 1.0 0.0 0.0 0.0 0.0 0.0
EMISFACT L0001252     HROFDY 0.0 0.0 0.0 0.0 0.0 0.0
EMISFACT L0001252     HROFDY 0.0 1.0 1.0 1.0 1.0 1.0
EMISFACT L0001252     HROFDY 1.0 1.0 1.0 1.0 1.0 1.0
EMISFACT L0001252     HROFDY 1.0 0.0 0.0 0.0 0.0 0.0
EMISFACT L0001253     HROFDY 0.0 0.0 0.0 0.0 0.0 0.0
EMISFACT L0001253     HROFDY 0.0 1.0 1.0 1.0 1.0 1.0
EMISFACT L0001253     HROFDY 1.0 1.0 1.0 1.0 1.0 1.0
EMISFACT L0001253     HROFDY 1.0 0.0 0.0 0.0 0.0 0.0
EMISFACT L0001254     HROFDY 0.0 0.0 0.0 0.0 0.0 0.0
EMISFACT L0001254     HROFDY 0.0 1.0 1.0 1.0 1.0 1.0
EMISFACT L0001254     HROFDY 1.0 1.0 1.0 1.0 1.0 1.0
EMISFACT L0001254     HROFDY 1.0 0.0 0.0 0.0 0.0 0.0
EMISFACT L0001255     HROFDY 0.0 0.0 0.0 0.0 0.0 0.0
EMISFACT L0001255     HROFDY 0.0 1.0 1.0 1.0 1.0 1.0
EMISFACT L0001255     HROFDY 1.0 1.0 1.0 1.0 1.0 1.0
EMISFACT L0001255     HROFDY 1.0 0.0 0.0 0.0 0.0 0.0
EMISFACT L0001256     HROFDY 0.0 0.0 0.0 0.0 0.0 0.0
EMISFACT L0001256     HROFDY 0.0 1.0 1.0 1.0 1.0 1.0
EMISFACT L0001256     HROFDY 1.0 1.0 1.0 1.0 1.0 1.0
EMISFACT L0001256     HROFDY 1.0 0.0 0.0 0.0 0.0 0.0
```

```
EMISFACT L0001257     HROFDY 0.0 0.0 0.0 0.0 0.0 0.0
EMISFACT L0001257     HROFDY 0.0 1.0 1.0 1.0 1.0 1.0
EMISFACT L0001257     HROFDY 1.0 1.0 1.0 1.0 1.0 1.0
EMISFACT L0001257     HROFDY 1.0 0.0 0.0 0.0 0.0 0.0
EMISFACT L0001258     HROFDY 0.0 0.0 0.0 0.0 0.0 0.0
EMISFACT L0001258     HROFDY 0.0 1.0 1.0 1.0 1.0 1.0
EMISFACT L0001258     HROFDY 1.0 1.0 1.0 1.0 1.0 1.0
EMISFACT L0001258     HROFDY 1.0 0.0 0.0 0.0 0.0 0.0
EMISFACT L0001259     HROFDY 0.0 0.0 0.0 0.0 0.0 0.0
EMISFACT L0001259     HROFDY 0.0 1.0 1.0 1.0 1.0 1.0
EMISFACT L0001259     HROFDY 1.0 1.0 1.0 1.0 1.0 1.0
EMISFACT L0001259     HROFDY 1.0 0.0 0.0 0.0 0.0 0.0
EMISFACT L0001260     HROFDY 0.0 0.0 0.0 0.0 0.0 0.0
EMISFACT L0001260     HROFDY 0.0 1.0 1.0 1.0 1.0 1.0
EMISFACT L0001260     HROFDY 1.0 1.0 1.0 1.0 1.0 1.0
EMISFACT L0001260     HROFDY 1.0 0.0 0.0 0.0 0.0 0.0
EMISFACT L0001261     HROFDY 0.0 0.0 0.0 0.0 0.0 0.0
EMISFACT L0001261     HROFDY 0.0 1.0 1.0 1.0 1.0 1.0
EMISFACT L0001261     HROFDY 1.0 1.0 1.0 1.0 1.0 1.0
EMISFACT L0001261     HROFDY 1.0 0.0 0.0 0.0 0.0 0.0
EMISFACT L0001262     HROFDY 0.0 0.0 0.0 0.0 0.0 0.0
EMISFACT L0001262     HROFDY 0.0 1.0 1.0 1.0 1.0 1.0
EMISFACT L0001262     HROFDY 1.0 1.0 1.0 1.0 1.0 1.0
EMISFACT L0001262     HROFDY 1.0 0.0 0.0 0.0 0.0 0.0
EMISFACT L0001263     HROFDY 0.0 0.0 0.0 0.0 0.0 0.0
EMISFACT L0001263     HROFDY 0.0 1.0 1.0 1.0 1.0 1.0
EMISFACT L0001263     HROFDY 1.0 1.0 1.0 1.0 1.0 1.0
EMISFACT L0001263     HROFDY 1.0 0.0 0.0 0.0 0.0 0.0
EMISFACT L0001264     HROFDY 0.0 0.0 0.0 0.0 0.0 0.0
EMISFACT L0001264     HROFDY 0.0 1.0 1.0 1.0 1.0 1.0
EMISFACT L0001264     HROFDY 1.0 1.0 1.0 1.0 1.0 1.0
EMISFACT L0001264     HROFDY 1.0 0.0 0.0 0.0 0.0 0.0
EMISFACT L0001265     HROFDY 0.0 0.0 0.0 0.0 0.0 0.0
EMISFACT L0001265     HROFDY 0.0 1.0 1.0 1.0 1.0 1.0
EMISFACT L0001265     HROFDY 1.0 1.0 1.0 1.0 1.0 1.0
EMISFACT L0001265     HROFDY 1.0 0.0 0.0 0.0 0.0 0.0
EMISFACT L0001266     HROFDY 0.0 0.0 0.0 0.0 0.0 0.0
EMISFACT L0001266     HROFDY 0.0 1.0 1.0 1.0 1.0 1.0
EMISFACT L0001266     HROFDY 1.0 1.0 1.0 1.0 1.0 1.0
EMISFACT L0001266     HROFDY 1.0 0.0 0.0 0.0 0.0 0.0
EMISFACT L0001267     HROFDY 0.0 0.0 0.0 0.0 0.0 0.0
EMISFACT L0001267     HROFDY 0.0 1.0 1.0 1.0 1.0 1.0
EMISFACT L0001267     HROFDY 1.0 1.0 1.0 1.0 1.0 1.0
EMISFACT L0001267     HROFDY 1.0 0.0 0.0 0.0 0.0 0.0
EMISFACT L0001268     HROFDY 0.0 0.0 0.0 0.0 0.0 0.0
EMISFACT L0001268     HROFDY 0.0 1.0 1.0 1.0 1.0 1.0
EMISFACT L0001268     HROFDY 1.0 1.0 1.0 1.0 1.0 1.0
EMISFACT L0001268     HROFDY 1.0 0.0 0.0 0.0 0.0 0.0
EMISFACT L0001269     HROFDY 0.0 0.0 0.0 0.0 0.0 0.0
EMISFACT L0001269     HROFDY 0.0 1.0 1.0 1.0 1.0 1.0
EMISFACT L0001269     HROFDY 1.0 1.0 1.0 1.0 1.0 1.0
EMISFACT L0001269     HROFDY 1.0 0.0 0.0 0.0 0.0 0.0
EMISFACT L0001270     HROFDY 0.0 0.0 0.0 0.0 0.0 0.0
EMISFACT L0001270     HROFDY 0.0 1.0 1.0 1.0 1.0 1.0
EMISFACT L0001270     HROFDY 1.0 1.0 1.0 1.0 1.0 1.0
EMISFACT L0001270     HROFDY 1.0 0.0 0.0 0.0 0.0 0.0
EMISFACT L0001271     HROFDY 0.0 0.0 0.0 0.0 0.0 0.0
EMISFACT L0001271     HROFDY 0.0 1.0 1.0 1.0 1.0 1.0
EMISFACT L0001271     HROFDY 1.0 1.0 1.0 1.0 1.0 1.0
EMISFACT L0001271     HROFDY 1.0 0.0 0.0 0.0 0.0 0.0
EMISFACT L0001272     HROFDY 0.0 0.0 0.0 0.0 0.0 0.0
EMISFACT L0001272     HROFDY 0.0 1.0 1.0 1.0 1.0 1.0
EMISFACT L0001272     HROFDY 1.0 1.0 1.0 1.0 1.0 1.0
EMISFACT L0001272     HROFDY 1.0 0.0 0.0 0.0 0.0 0.0
EMISFACT L0001273     HROFDY 0.0 0.0 0.0 0.0 0.0 0.0
EMISFACT L0001273     HROFDY 0.0 1.0 1.0 1.0 1.0 1.0
EMISFACT L0001273     HROFDY 1.0 1.0 1.0 1.0 1.0 1.0
EMISFACT L0001273     HROFDY 1.0 0.0 0.0 0.0 0.0 0.0
EMISFACT L0001274     HROFDY 0.0 0.0 0.0 0.0 0.0 0.0
EMISFACT L0001274     HROFDY 0.0 1.0 1.0 1.0 1.0 1.0
EMISFACT L0001274     HROFDY 1.0 1.0 1.0 1.0 1.0 1.0
EMISFACT L0001274     HROFDY 1.0 0.0 0.0 0.0 0.0 0.0
EMISFACT L0001275     HROFDY 0.0 0.0 0.0 0.0 0.0 0.0
EMISFACT L0001275     HROFDY 0.0 1.0 1.0 1.0 1.0 1.0
EMISFACT L0001275     HROFDY 1.0 1.0 1.0 1.0 1.0 1.0
EMISFACT L0001275     HROFDY 1.0 0.0 0.0 0.0 0.0 0.0
```

```
EMISFACT L0001276     HROFDY 0.0 0.0 0.0 0.0 0.0 0.0
EMISFACT L0001276     HROFDY 0.0 1.0 1.0 1.0 1.0 1.0
EMISFACT L0001276     HROFDY 1.0 1.0 1.0 1.0 1.0 1.0
EMISFACT L0001276     HROFDY 1.0 0.0 0.0 0.0 0.0 0.0
EMISFACT L0001277     HROFDY 0.0 0.0 0.0 0.0 0.0 0.0
EMISFACT L0001277     HROFDY 0.0 1.0 1.0 1.0 1.0 1.0
EMISFACT L0001277     HROFDY 1.0 1.0 1.0 1.0 1.0 1.0
EMISFACT L0001277     HROFDY 1.0 0.0 0.0 0.0 0.0 0.0
EMISFACT L0001278     HROFDY 0.0 0.0 0.0 0.0 0.0 0.0
EMISFACT L0001278     HROFDY 0.0 1.0 1.0 1.0 1.0 1.0
EMISFACT L0001278     HROFDY 1.0 1.0 1.0 1.0 1.0 1.0
EMISFACT L0001278     HROFDY 1.0 0.0 0.0 0.0 0.0 0.0
EMISFACT L0001279     HROFDY 0.0 0.0 0.0 0.0 0.0 0.0
EMISFACT L0001279     HROFDY 0.0 1.0 1.0 1.0 1.0 1.0
EMISFACT L0001279     HROFDY 1.0 1.0 1.0 1.0 1.0 1.0
EMISFACT L0001279     HROFDY 1.0 0.0 0.0 0.0 0.0 0.0
EMISFACT L0001280     HROFDY 0.0 0.0 0.0 0.0 0.0 0.0
EMISFACT L0001280     HROFDY 0.0 1.0 1.0 1.0 1.0 1.0
EMISFACT L0001280     HROFDY 1.0 1.0 1.0 1.0 1.0 1.0
EMISFACT L0001280     HROFDY 1.0 0.0 0.0 0.0 0.0 0.0
EMISFACT L0001281     HROFDY 0.0 0.0 0.0 0.0 0.0 0.0
EMISFACT L0001281     HROFDY 0.0 1.0 1.0 1.0 1.0 1.0
EMISFACT L0001281     HROFDY 1.0 1.0 1.0 1.0 1.0 1.0
EMISFACT L0001281     HROFDY 1.0 0.0 0.0 0.0 0.0 0.0
EMISFACT L0001282     HROFDY 0.0 0.0 0.0 0.0 0.0 0.0
EMISFACT L0001282     HROFDY 0.0 1.0 1.0 1.0 1.0 1.0
EMISFACT L0001282     HROFDY 1.0 1.0 1.0 1.0 1.0 1.0
EMISFACT L0001282     HROFDY 1.0 0.0 0.0 0.0 0.0 0.0
EMISFACT L0001283     HROFDY 0.0 0.0 0.0 0.0 0.0 0.0
EMISFACT L0001283     HROFDY 0.0 1.0 1.0 1.0 1.0 1.0
EMISFACT L0001283     HROFDY 1.0 1.0 1.0 1.0 1.0 1.0
EMISFACT L0001283     HROFDY 1.0 0.0 0.0 0.0 0.0 0.0
EMISFACT L0001284     HROFDY 0.0 0.0 0.0 0.0 0.0 0.0
EMISFACT L0001284     HROFDY 0.0 1.0 1.0 1.0 1.0 1.0
EMISFACT L0001284     HROFDY 1.0 1.0 1.0 1.0 1.0 1.0
EMISFACT L0001284     HROFDY 1.0 0.0 0.0 0.0 0.0 0.0
EMISFACT L0001285     HROFDY 0.0 0.0 0.0 0.0 0.0 0.0
EMISFACT L0001285     HROFDY 0.0 1.0 1.0 1.0 1.0 1.0
EMISFACT L0001285     HROFDY 1.0 1.0 1.0 1.0 1.0 1.0
EMISFACT L0001285     HROFDY 1.0 0.0 0.0 0.0 0.0 0.0
EMISFACT L0001286     HROFDY 0.0 0.0 0.0 0.0 0.0 0.0
EMISFACT L0001286     HROFDY 0.0 1.0 1.0 1.0 1.0 1.0
EMISFACT L0001286     HROFDY 1.0 1.0 1.0 1.0 1.0 1.0
EMISFACT L0001286     HROFDY 1.0 0.0 0.0 0.0 0.0 0.0
EMISFACT L0001287     HROFDY 0.0 0.0 0.0 0.0 0.0 0.0
EMISFACT L0001287     HROFDY 0.0 1.0 1.0 1.0 1.0 1.0
EMISFACT L0001287     HROFDY 1.0 1.0 1.0 1.0 1.0 1.0
EMISFACT L0001287     HROFDY 1.0 0.0 0.0 0.0 0.0 0.0
EMISFACT L0001288     HROFDY 0.0 0.0 0.0 0.0 0.0 0.0
EMISFACT L0001288     HROFDY 0.0 1.0 1.0 1.0 1.0 1.0
EMISFACT L0001288     HROFDY 1.0 1.0 1.0 1.0 1.0 1.0
EMISFACT L0001288     HROFDY 1.0 0.0 0.0 0.0 0.0 0.0
EMISFACT L0001289     HROFDY 0.0 0.0 0.0 0.0 0.0 0.0
EMISFACT L0001289     HROFDY 0.0 1.0 1.0 1.0 1.0 1.0
EMISFACT L0001289     HROFDY 1.0 1.0 1.0 1.0 1.0 1.0
EMISFACT L0001289     HROFDY 1.0 0.0 0.0 0.0 0.0 0.0
EMISFACT L0001290     HROFDY 0.0 0.0 0.0 0.0 0.0 0.0
EMISFACT L0001290     HROFDY 0.0 1.0 1.0 1.0 1.0 1.0
EMISFACT L0001290     HROFDY 1.0 1.0 1.0 1.0 1.0 1.0
EMISFACT L0001290     HROFDY 1.0 0.0 0.0 0.0 0.0 0.0
EMISFACT L0001291     HROFDY 0.0 0.0 0.0 0.0 0.0 0.0
EMISFACT L0001291     HROFDY 0.0 1.0 1.0 1.0 1.0 1.0
EMISFACT L0001291     HROFDY 1.0 1.0 1.0 1.0 1.0 1.0
EMISFACT L0001291     HROFDY 1.0 0.0 0.0 0.0 0.0 0.0
EMISFACT L0001292     HROFDY 0.0 0.0 0.0 0.0 0.0 0.0
EMISFACT L0001292     HROFDY 0.0 1.0 1.0 1.0 1.0 1.0
EMISFACT L0001292     HROFDY 1.0 1.0 1.0 1.0 1.0 1.0
EMISFACT L0001292     HROFDY 1.0 0.0 0.0 0.0 0.0 0.0
EMISFACT L0001293     HROFDY 0.0 0.0 0.0 0.0 0.0 0.0
EMISFACT L0001293     HROFDY 0.0 1.0 1.0 1.0 1.0 1.0
EMISFACT L0001293     HROFDY 1.0 1.0 1.0 1.0 1.0 1.0
EMISFACT L0001293     HROFDY 1.0 0.0 0.0 0.0 0.0 0.0
EMISFACT L0001294     HROFDY 0.0 0.0 0.0 0.0 0.0 0.0
EMISFACT L0001294     HROFDY 0.0 1.0 1.0 1.0 1.0 1.0
EMISFACT L0001294     HROFDY 1.0 1.0 1.0 1.0 1.0 1.0
EMISFACT L0001294     HROFDY 1.0 0.0 0.0 0.0 0.0 0.0
```

```
EMISFACT L0001295     HROFDY 0.0 0.0 0.0 0.0 0.0 0.0
EMISFACT L0001295     HROFDY 0.0 1.0 1.0 1.0 1.0 1.0
EMISFACT L0001295     HROFDY 1.0 1.0 1.0 1.0 1.0 1.0
EMISFACT L0001295     HROFDY 1.0 0.0 0.0 0.0 0.0 0.0
EMISFACT L0001296     HROFDY 0.0 0.0 0.0 0.0 0.0 0.0
EMISFACT L0001296     HROFDY 0.0 1.0 1.0 1.0 1.0 1.0
EMISFACT L0001296     HROFDY 1.0 1.0 1.0 1.0 1.0 1.0
EMISFACT L0001296     HROFDY 1.0 0.0 0.0 0.0 0.0 0.0
EMISFACT L0001297     HROFDY 0.0 0.0 0.0 0.0 0.0 0.0
EMISFACT L0001297     HROFDY 0.0 1.0 1.0 1.0 1.0 1.0
EMISFACT L0001297     HROFDY 1.0 1.0 1.0 1.0 1.0 1.0
EMISFACT L0001297     HROFDY 1.0 0.0 0.0 0.0 0.0 0.0
EMISFACT L0001298     HROFDY 0.0 0.0 0.0 0.0 0.0 0.0
EMISFACT L0001298     HROFDY 0.0 1.0 1.0 1.0 1.0 1.0
EMISFACT L0001298     HROFDY 1.0 1.0 1.0 1.0 1.0 1.0
EMISFACT L0001298     HROFDY 1.0 0.0 0.0 0.0 0.0 0.0
EMISFACT L0001299     HROFDY 0.0 0.0 0.0 0.0 0.0 0.0
EMISFACT L0001299     HROFDY 0.0 1.0 1.0 1.0 1.0 1.0
EMISFACT L0001299     HROFDY 1.0 1.0 1.0 1.0 1.0 1.0
EMISFACT L0001299     HROFDY 1.0 0.0 0.0 0.0 0.0 0.0
EMISFACT L0001300     HROFDY 0.0 0.0 0.0 0.0 0.0 0.0
EMISFACT L0001300     HROFDY 0.0 1.0 1.0 1.0 1.0 1.0
EMISFACT L0001300     HROFDY 1.0 1.0 1.0 1.0 1.0 1.0
EMISFACT L0001300     HROFDY 1.0 0.0 0.0 0.0 0.0 0.0
EMISFACT L0001301     HROFDY 0.0 0.0 0.0 0.0 0.0 0.0
EMISFACT L0001301     HROFDY 0.0 1.0 1.0 1.0 1.0 1.0
EMISFACT L0001301     HROFDY 1.0 1.0 1.0 1.0 1.0 1.0
EMISFACT L0001301     HROFDY 1.0 0.0 0.0 0.0 0.0 0.0
EMISFACT L0001302     HROFDY 0.0 0.0 0.0 0.0 0.0 0.0
EMISFACT L0001302     HROFDY 0.0 1.0 1.0 1.0 1.0 1.0
EMISFACT L0001302     HROFDY 1.0 1.0 1.0 1.0 1.0 1.0
EMISFACT L0001302     HROFDY 1.0 0.0 0.0 0.0 0.0 0.0
EMISFACT L0001303     HROFDY 0.0 0.0 0.0 0.0 0.0 0.0
EMISFACT L0001303     HROFDY 0.0 1.0 1.0 1.0 1.0 1.0
EMISFACT L0001303     HROFDY 1.0 1.0 1.0 1.0 1.0 1.0
EMISFACT L0001303     HROFDY 1.0 0.0 0.0 0.0 0.0 0.0
EMISFACT L0001304     HROFDY 0.0 0.0 0.0 0.0 0.0 0.0
EMISFACT L0001304     HROFDY 0.0 1.0 1.0 1.0 1.0 1.0
EMISFACT L0001304     HROFDY 1.0 1.0 1.0 1.0 1.0 1.0
EMISFACT L0001304     HROFDY 1.0 0.0 0.0 0.0 0.0 0.0
EMISFACT L0001305     HROFDY 0.0 0.0 0.0 0.0 0.0 0.0
EMISFACT L0001305     HROFDY 0.0 1.0 1.0 1.0 1.0 1.0
EMISFACT L0001305     HROFDY 1.0 1.0 1.0 1.0 1.0 1.0
EMISFACT L0001305     HROFDY 1.0 0.0 0.0 0.0 0.0 0.0
EMISFACT L0001306     HROFDY 0.0 0.0 0.0 0.0 0.0 0.0
EMISFACT L0001306     HROFDY 0.0 1.0 1.0 1.0 1.0 1.0
EMISFACT L0001306     HROFDY 1.0 1.0 1.0 1.0 1.0 1.0
EMISFACT L0001306     HROFDY 1.0 0.0 0.0 0.0 0.0 0.0
EMISFACT L0001307     HROFDY 0.0 0.0 0.0 0.0 0.0 0.0
EMISFACT L0001307     HROFDY 0.0 1.0 1.0 1.0 1.0 1.0
EMISFACT L0001307     HROFDY 1.0 1.0 1.0 1.0 1.0 1.0
EMISFACT L0001307     HROFDY 1.0 0.0 0.0 0.0 0.0 0.0
EMISFACT L0001308     HROFDY 0.0 0.0 0.0 0.0 0.0 0.0
EMISFACT L0001308     HROFDY 0.0 1.0 1.0 1.0 1.0 1.0
EMISFACT L0001308     HROFDY 1.0 1.0 1.0 1.0 1.0 1.0
EMISFACT L0001308     HROFDY 1.0 0.0 0.0 0.0 0.0 0.0
EMISFACT L0001309     HROFDY 0.0 0.0 0.0 0.0 0.0 0.0
EMISFACT L0001309     HROFDY 0.0 1.0 1.0 1.0 1.0 1.0
EMISFACT L0001309     HROFDY 1.0 1.0 1.0 1.0 1.0 1.0
EMISFACT L0001309     HROFDY 1.0 0.0 0.0 0.0 0.0 0.0
EMISFACT L0001310     HROFDY 0.0 0.0 0.0 0.0 0.0 0.0
EMISFACT L0001310     HROFDY 0.0 1.0 1.0 1.0 1.0 1.0
EMISFACT L0001310     HROFDY 1.0 1.0 1.0 1.0 1.0 1.0
EMISFACT L0001310     HROFDY 1.0 0.0 0.0 0.0 0.0 0.0
EMISFACT L0001311     HROFDY 0.0 0.0 0.0 0.0 0.0 0.0
EMISFACT L0001311     HROFDY 0.0 1.0 1.0 1.0 1.0 1.0
EMISFACT L0001311     HROFDY 1.0 1.0 1.0 1.0 1.0 1.0
EMISFACT L0001311     HROFDY 1.0 0.0 0.0 0.0 0.0 0.0
EMISFACT L0001312     HROFDY 0.0 0.0 0.0 0.0 0.0 0.0
EMISFACT L0001312     HROFDY 0.0 1.0 1.0 1.0 1.0 1.0
EMISFACT L0001312     HROFDY 1.0 1.0 1.0 1.0 1.0 1.0
EMISFACT L0001312     HROFDY 1.0 0.0 0.0 0.0 0.0 0.0
EMISFACT L0001313     HROFDY 0.0 0.0 0.0 0.0 0.0 0.0
EMISFACT L0001313     HROFDY 0.0 1.0 1.0 1.0 1.0 1.0
EMISFACT L0001313     HROFDY 1.0 1.0 1.0 1.0 1.0 1.0
EMISFACT L0001313     HROFDY 1.0 0.0 0.0 0.0 0.0 0.0
```

```
EMISFACT L0001314     HROFDY 0.0 0.0 0.0 0.0 0.0 0.0
EMISFACT L0001314     HROFDY 0.0 1.0 1.0 1.0 1.0 1.0
EMISFACT L0001314     HROFDY 1.0 1.0 1.0 1.0 1.0 1.0
EMISFACT L0001314     HROFDY 1.0 0.0 0.0 0.0 0.0 0.0
EMISFACT L0001315     HROFDY 0.0 0.0 0.0 0.0 0.0 0.0
EMISFACT L0001315     HROFDY 0.0 1.0 1.0 1.0 1.0 1.0
EMISFACT L0001315     HROFDY 1.0 1.0 1.0 1.0 1.0 1.0
EMISFACT L0001315     HROFDY 1.0 0.0 0.0 0.0 0.0 0.0
EMISFACT L0001316     HROFDY 0.0 0.0 0.0 0.0 0.0 0.0
EMISFACT L0001316     HROFDY 0.0 1.0 1.0 1.0 1.0 1.0
EMISFACT L0001316     HROFDY 1.0 1.0 1.0 1.0 1.0 1.0
EMISFACT L0001316     HROFDY 1.0 0.0 0.0 0.0 0.0 0.0
EMISFACT L0001317     HROFDY 0.0 0.0 0.0 0.0 0.0 0.0
EMISFACT L0001317     HROFDY 0.0 1.0 1.0 1.0 1.0 1.0
EMISFACT L0001317     HROFDY 1.0 1.0 1.0 1.0 1.0 1.0
EMISFACT L0001317     HROFDY 1.0 0.0 0.0 0.0 0.0 0.0
EMISFACT L0001318     HROFDY 0.0 0.0 0.0 0.0 0.0 0.0
EMISFACT L0001318     HROFDY 0.0 1.0 1.0 1.0 1.0 1.0
EMISFACT L0001318     HROFDY 1.0 1.0 1.0 1.0 1.0 1.0
EMISFACT L0001318     HROFDY 1.0 0.0 0.0 0.0 0.0 0.0
EMISFACT L0001319     HROFDY 0.0 0.0 0.0 0.0 0.0 0.0
EMISFACT L0001319     HROFDY 0.0 1.0 1.0 1.0 1.0 1.0
EMISFACT L0001319     HROFDY 1.0 1.0 1.0 1.0 1.0 1.0
EMISFACT L0001319     HROFDY 1.0 0.0 0.0 0.0 0.0 0.0
EMISFACT L0001320     HROFDY 0.0 0.0 0.0 0.0 0.0 0.0
EMISFACT L0001320     HROFDY 0.0 1.0 1.0 1.0 1.0 1.0
EMISFACT L0001320     HROFDY 1.0 1.0 1.0 1.0 1.0 1.0
EMISFACT L0001320     HROFDY 1.0 0.0 0.0 0.0 0.0 0.0
EMISFACT L0001321     HROFDY 0.0 0.0 0.0 0.0 0.0 0.0
EMISFACT L0001321     HROFDY 0.0 1.0 1.0 1.0 1.0 1.0
EMISFACT L0001321     HROFDY 1.0 1.0 1.0 1.0 1.0 1.0
EMISFACT L0001321     HROFDY 1.0 0.0 0.0 0.0 0.0 0.0
EMISFACT L0001322     HROFDY 0.0 0.0 0.0 0.0 0.0 0.0
EMISFACT L0001322     HROFDY 0.0 1.0 1.0 1.0 1.0 1.0
EMISFACT L0001322     HROFDY 1.0 1.0 1.0 1.0 1.0 1.0
EMISFACT L0001322     HROFDY 1.0 0.0 0.0 0.0 0.0 0.0
EMISFACT L0001323     HROFDY 0.0 0.0 0.0 0.0 0.0 0.0
EMISFACT L0001323     HROFDY 0.0 1.0 1.0 1.0 1.0 1.0
EMISFACT L0001323     HROFDY 1.0 1.0 1.0 1.0 1.0 1.0
EMISFACT L0001323     HROFDY 1.0 0.0 0.0 0.0 0.0 0.0
EMISFACT L0001324     HROFDY 0.0 0.0 0.0 0.0 0.0 0.0
EMISFACT L0001324     HROFDY 0.0 1.0 1.0 1.0 1.0 1.0
EMISFACT L0001324     HROFDY 1.0 1.0 1.0 1.0 1.0 1.0
EMISFACT L0001324     HROFDY 1.0 0.0 0.0 0.0 0.0 0.0
EMISFACT L0001325     HROFDY 0.0 0.0 0.0 0.0 0.0 0.0
EMISFACT L0001325     HROFDY 0.0 1.0 1.0 1.0 1.0 1.0
EMISFACT L0001325     HROFDY 1.0 1.0 1.0 1.0 1.0 1.0
EMISFACT L0001325     HROFDY 1.0 0.0 0.0 0.0 0.0 0.0
EMISFACT L0001326     HROFDY 0.0 0.0 0.0 0.0 0.0 0.0
EMISFACT L0001326     HROFDY 0.0 1.0 1.0 1.0 1.0 1.0
EMISFACT L0001326     HROFDY 1.0 1.0 1.0 1.0 1.0 1.0
EMISFACT L0001326     HROFDY 1.0 0.0 0.0 0.0 0.0 0.0
EMISFACT L0001327     HROFDY 0.0 0.0 0.0 0.0 0.0 0.0
EMISFACT L0001327     HROFDY 0.0 1.0 1.0 1.0 1.0 1.0
EMISFACT L0001327     HROFDY 1.0 1.0 1.0 1.0 1.0 1.0
EMISFACT L0001327     HROFDY 1.0 0.0 0.0 0.0 0.0 0.0
EMISFACT L0001328     HROFDY 0.0 0.0 0.0 0.0 0.0 0.0
EMISFACT L0001328     HROFDY 0.0 1.0 1.0 1.0 1.0 1.0
EMISFACT L0001328     HROFDY 1.0 1.0 1.0 1.0 1.0 1.0
EMISFACT L0001328     HROFDY 1.0 0.0 0.0 0.0 0.0 0.0
EMISFACT L0001329     HROFDY 0.0 0.0 0.0 0.0 0.0 0.0
EMISFACT L0001329     HROFDY 0.0 1.0 1.0 1.0 1.0 1.0
EMISFACT L0001329     HROFDY 1.0 1.0 1.0 1.0 1.0 1.0
EMISFACT L0001329     HROFDY 1.0 0.0 0.0 0.0 0.0 0.0
EMISFACT L0001330     HROFDY 0.0 0.0 0.0 0.0 0.0 0.0
EMISFACT L0001330     HROFDY 0.0 1.0 1.0 1.0 1.0 1.0
EMISFACT L0001330     HROFDY 1.0 1.0 1.0 1.0 1.0 1.0
EMISFACT L0001330     HROFDY 1.0 0.0 0.0 0.0 0.0 0.0
EMISFACT L0001331     HROFDY 0.0 0.0 0.0 0.0 0.0 0.0
EMISFACT L0001331     HROFDY 0.0 1.0 1.0 1.0 1.0 1.0
EMISFACT L0001331     HROFDY 1.0 1.0 1.0 1.0 1.0 1.0
EMISFACT L0001331     HROFDY 1.0 0.0 0.0 0.0 0.0 0.0
EMISFACT L0001332     HROFDY 0.0 0.0 0.0 0.0 0.0 0.0
EMISFACT L0001332     HROFDY 0.0 1.0 1.0 1.0 1.0 1.0
EMISFACT L0001332     HROFDY 1.0 1.0 1.0 1.0 1.0 1.0
EMISFACT L0001332     HROFDY 1.0 0.0 0.0 0.0 0.0 0.0
```

```
EMISFACT L0001333     HROFDY 0.0 0.0 0.0 0.0 0.0 0.0
EMISFACT L0001333     HROFDY 0.0 1.0 1.0 1.0 1.0 1.0
EMISFACT L0001333     HROFDY 1.0 1.0 1.0 1.0 1.0 1.0
EMISFACT L0001333     HROFDY 1.0 0.0 0.0 0.0 0.0 0.0
EMISFACT L0001334     HROFDY 0.0 0.0 0.0 0.0 0.0 0.0
EMISFACT L0001334     HROFDY 0.0 1.0 1.0 1.0 1.0 1.0
EMISFACT L0001334     HROFDY 1.0 1.0 1.0 1.0 1.0 1.0
EMISFACT L0001334     HROFDY 1.0 0.0 0.0 0.0 0.0 0.0
EMISFACT L0001335     HROFDY 0.0 0.0 0.0 0.0 0.0 0.0
EMISFACT L0001335     HROFDY 0.0 1.0 1.0 1.0 1.0 1.0
EMISFACT L0001335     HROFDY 1.0 1.0 1.0 1.0 1.0 1.0
EMISFACT L0001335     HROFDY 1.0 0.0 0.0 0.0 0.0 0.0
EMISFACT L0001336     HROFDY 0.0 0.0 0.0 0.0 0.0 0.0
EMISFACT L0001336     HROFDY 0.0 1.0 1.0 1.0 1.0 1.0
EMISFACT L0001336     HROFDY 1.0 1.0 1.0 1.0 1.0 1.0
EMISFACT L0001336     HROFDY 1.0 0.0 0.0 0.0 0.0 0.0
EMISFACT L0001337     HROFDY 0.0 0.0 0.0 0.0 0.0 0.0
EMISFACT L0001337     HROFDY 0.0 1.0 1.0 1.0 1.0 1.0
EMISFACT L0001337     HROFDY 1.0 1.0 1.0 1.0 1.0 1.0
EMISFACT L0001337     HROFDY 1.0 0.0 0.0 0.0 0.0 0.0
EMISFACT L0001338     HROFDY 0.0 0.0 0.0 0.0 0.0 0.0
EMISFACT L0001338     HROFDY 0.0 1.0 1.0 1.0 1.0 1.0
EMISFACT L0001338     HROFDY 1.0 1.0 1.0 1.0 1.0 1.0
EMISFACT L0001338     HROFDY 1.0 0.0 0.0 0.0 0.0 0.0
EMISFACT L0001339     HROFDY 0.0 0.0 0.0 0.0 0.0 0.0
EMISFACT L0001339     HROFDY 0.0 1.0 1.0 1.0 1.0 1.0
EMISFACT L0001339     HROFDY 1.0 1.0 1.0 1.0 1.0 1.0
EMISFACT L0001339     HROFDY 1.0 0.0 0.0 0.0 0.0 0.0
EMISFACT L0001340     HROFDY 0.0 0.0 0.0 0.0 0.0 0.0
EMISFACT L0001340     HROFDY 0.0 1.0 1.0 1.0 1.0 1.0
EMISFACT L0001340     HROFDY 1.0 1.0 1.0 1.0 1.0 1.0
EMISFACT L0001340     HROFDY 1.0 0.0 0.0 0.0 0.0 0.0
EMISFACT L0001341     HROFDY 0.0 0.0 0.0 0.0 0.0 0.0
EMISFACT L0001341     HROFDY 0.0 1.0 1.0 1.0 1.0 1.0
EMISFACT L0001341     HROFDY 1.0 1.0 1.0 1.0 1.0 1.0
EMISFACT L0001341     HROFDY 1.0 0.0 0.0 0.0 0.0 0.0
EMISFACT L0001342     HROFDY 0.0 0.0 0.0 0.0 0.0 0.0
EMISFACT L0001342     HROFDY 0.0 1.0 1.0 1.0 1.0 1.0
EMISFACT L0001342     HROFDY 1.0 1.0 1.0 1.0 1.0 1.0
EMISFACT L0001342     HROFDY 1.0 0.0 0.0 0.0 0.0 0.0
EMISFACT L0001343     HROFDY 0.0 0.0 0.0 0.0 0.0 0.0
EMISFACT L0001343     HROFDY 0.0 1.0 1.0 1.0 1.0 1.0
EMISFACT L0001343     HROFDY 1.0 1.0 1.0 1.0 1.0 1.0
EMISFACT L0001343     HROFDY 1.0 0.0 0.0 0.0 0.0 0.0
EMISFACT L0001344     HROFDY 0.0 0.0 0.0 0.0 0.0 0.0
EMISFACT L0001344     HROFDY 0.0 1.0 1.0 1.0 1.0 1.0
EMISFACT L0001344     HROFDY 1.0 1.0 1.0 1.0 1.0 1.0
EMISFACT L0001344     HROFDY 1.0 0.0 0.0 0.0 0.0 0.0
EMISFACT L0001345     HROFDY 0.0 0.0 0.0 0.0 0.0 0.0
EMISFACT L0001345     HROFDY 0.0 1.0 1.0 1.0 1.0 1.0
EMISFACT L0001345     HROFDY 1.0 1.0 1.0 1.0 1.0 1.0
EMISFACT L0001345     HROFDY 1.0 0.0 0.0 0.0 0.0 0.0
EMISFACT L0001346     HROFDY 0.0 0.0 0.0 0.0 0.0 0.0
EMISFACT L0001346     HROFDY 0.0 1.0 1.0 1.0 1.0 1.0
EMISFACT L0001346     HROFDY 1.0 1.0 1.0 1.0 1.0 1.0
EMISFACT L0001346     HROFDY 1.0 0.0 0.0 0.0 0.0 0.0
EMISFACT L0001347     HROFDY 0.0 0.0 0.0 0.0 0.0 0.0
EMISFACT L0001347     HROFDY 0.0 1.0 1.0 1.0 1.0 1.0
EMISFACT L0001347     HROFDY 1.0 1.0 1.0 1.0 1.0 1.0
EMISFACT L0001347     HROFDY 1.0 0.0 0.0 0.0 0.0 0.0
EMISFACT L0001348     HROFDY 0.0 0.0 0.0 0.0 0.0 0.0
EMISFACT L0001348     HROFDY 0.0 1.0 1.0 1.0 1.0 1.0
EMISFACT L0001348     HROFDY 1.0 1.0 1.0 1.0 1.0 1.0
EMISFACT L0001348     HROFDY 1.0 0.0 0.0 0.0 0.0 0.0
EMISFACT L0001349     HROFDY 0.0 0.0 0.0 0.0 0.0 0.0
EMISFACT L0001349     HROFDY 0.0 1.0 1.0 1.0 1.0 1.0
EMISFACT L0001349     HROFDY 1.0 1.0 1.0 1.0 1.0 1.0
EMISFACT L0001349     HROFDY 1.0 0.0 0.0 0.0 0.0 0.0
EMISFACT L0001350     HROFDY 0.0 0.0 0.0 0.0 0.0 0.0
EMISFACT L0001350     HROFDY 0.0 1.0 1.0 1.0 1.0 1.0
EMISFACT L0001350     HROFDY 1.0 1.0 1.0 1.0 1.0 1.0
EMISFACT L0001350     HROFDY 1.0 0.0 0.0 0.0 0.0 0.0
EMISFACT L0001351     HROFDY 0.0 0.0 0.0 0.0 0.0 0.0
EMISFACT L0001351     HROFDY 0.0 1.0 1.0 1.0 1.0 1.0
EMISFACT L0001351     HROFDY 1.0 1.0 1.0 1.0 1.0 1.0
EMISFACT L0001351     HROFDY 1.0 0.0 0.0 0.0 0.0 0.0
```

```
EMISFACT L0001352     HROFDY 0.0 0.0 0.0 0.0 0.0 0.0
EMISFACT L0001352     HROFDY 0.0 1.0 1.0 1.0 1.0 1.0
EMISFACT L0001352     HROFDY 1.0 1.0 1.0 1.0 1.0 1.0
EMISFACT L0001352     HROFDY 1.0 0.0 0.0 0.0 0.0 0.0
EMISFACT L0001353     HROFDY 0.0 0.0 0.0 0.0 0.0 0.0
EMISFACT L0001353     HROFDY 0.0 1.0 1.0 1.0 1.0 1.0
EMISFACT L0001353     HROFDY 1.0 1.0 1.0 1.0 1.0 1.0
EMISFACT L0001353     HROFDY 1.0 0.0 0.0 0.0 0.0 0.0
EMISFACT L0001354     HROFDY 0.0 0.0 0.0 0.0 0.0 0.0
EMISFACT L0001354     HROFDY 0.0 1.0 1.0 1.0 1.0 1.0
EMISFACT L0001354     HROFDY 1.0 1.0 1.0 1.0 1.0 1.0
EMISFACT L0001354     HROFDY 1.0 0.0 0.0 0.0 0.0 0.0
EMISFACT L0001355     HROFDY 0.0 0.0 0.0 0.0 0.0 0.0
EMISFACT L0001355     HROFDY 0.0 1.0 1.0 1.0 1.0 1.0
EMISFACT L0001355     HROFDY 1.0 1.0 1.0 1.0 1.0 1.0
EMISFACT L0001355     HROFDY 1.0 0.0 0.0 0.0 0.0 0.0
EMISFACT L0001356     HROFDY 0.0 0.0 0.0 0.0 0.0 0.0
EMISFACT L0001356     HROFDY 0.0 1.0 1.0 1.0 1.0 1.0
EMISFACT L0001356     HROFDY 1.0 1.0 1.0 1.0 1.0 1.0
EMISFACT L0001356     HROFDY 1.0 0.0 0.0 0.0 0.0 0.0
EMISFACT L0001357     HROFDY 0.0 0.0 0.0 0.0 0.0 0.0
EMISFACT L0001357     HROFDY 0.0 1.0 1.0 1.0 1.0 1.0
EMISFACT L0001357     HROFDY 1.0 1.0 1.0 1.0 1.0 1.0
EMISFACT L0001357     HROFDY 1.0 0.0 0.0 0.0 0.0 0.0
EMISFACT L0001358     HROFDY 0.0 0.0 0.0 0.0 0.0 0.0
EMISFACT L0001358     HROFDY 0.0 1.0 1.0 1.0 1.0 1.0
EMISFACT L0001358     HROFDY 1.0 1.0 1.0 1.0 1.0 1.0
EMISFACT L0001358     HROFDY 1.0 0.0 0.0 0.0 0.0 0.0
EMISFACT L0001359     HROFDY 0.0 0.0 0.0 0.0 0.0 0.0
EMISFACT L0001359     HROFDY 0.0 1.0 1.0 1.0 1.0 1.0
EMISFACT L0001359     HROFDY 1.0 1.0 1.0 1.0 1.0 1.0
EMISFACT L0001359     HROFDY 1.0 0.0 0.0 0.0 0.0 0.0
EMISFACT L0001360     HROFDY 0.0 0.0 0.0 0.0 0.0 0.0
EMISFACT L0001360     HROFDY 0.0 1.0 1.0 1.0 1.0 1.0
EMISFACT L0001360     HROFDY 1.0 1.0 1.0 1.0 1.0 1.0
EMISFACT L0001360     HROFDY 1.0 0.0 0.0 0.0 0.0 0.0
EMISFACT L0001361     HROFDY 0.0 0.0 0.0 0.0 0.0 0.0
EMISFACT L0001361     HROFDY 0.0 1.0 1.0 1.0 1.0 1.0
EMISFACT L0001361     HROFDY 1.0 1.0 1.0 1.0 1.0 1.0
EMISFACT L0001361     HROFDY 1.0 0.0 0.0 0.0 0.0 0.0
EMISFACT L0001362     HROFDY 0.0 0.0 0.0 0.0 0.0 0.0
EMISFACT L0001362     HROFDY 0.0 1.0 1.0 1.0 1.0 1.0
EMISFACT L0001362     HROFDY 1.0 1.0 1.0 1.0 1.0 1.0
EMISFACT L0001362     HROFDY 1.0 0.0 0.0 0.0 0.0 0.0
EMISFACT L0001363     HROFDY 0.0 0.0 0.0 0.0 0.0 0.0
EMISFACT L0001363     HROFDY 0.0 1.0 1.0 1.0 1.0 1.0
EMISFACT L0001363     HROFDY 1.0 1.0 1.0 1.0 1.0 1.0
EMISFACT L0001363     HROFDY 1.0 0.0 0.0 0.0 0.0 0.0
EMISFACT L0001364     HROFDY 0.0 0.0 0.0 0.0 0.0 0.0
EMISFACT L0001364     HROFDY 0.0 1.0 1.0 1.0 1.0 1.0
EMISFACT L0001364     HROFDY 1.0 1.0 1.0 1.0 1.0 1.0
EMISFACT L0001364     HROFDY 1.0 0.0 0.0 0.0 0.0 0.0
EMISFACT L0001365     HROFDY 0.0 0.0 0.0 0.0 0.0 0.0
EMISFACT L0001365     HROFDY 0.0 1.0 1.0 1.0 1.0 1.0
EMISFACT L0001365     HROFDY 1.0 1.0 1.0 1.0 1.0 1.0
EMISFACT L0001365     HROFDY 1.0 0.0 0.0 0.0 0.0 0.0
EMISFACT L0001366     HROFDY 0.0 0.0 0.0 0.0 0.0 0.0
EMISFACT L0001366     HROFDY 0.0 1.0 1.0 1.0 1.0 1.0
EMISFACT L0001366     HROFDY 1.0 1.0 1.0 1.0 1.0 1.0
EMISFACT L0001366     HROFDY 1.0 0.0 0.0 0.0 0.0 0.0
EMISFACT L0001367     HROFDY 0.0 0.0 0.0 0.0 0.0 0.0
EMISFACT L0001367     HROFDY 0.0 1.0 1.0 1.0 1.0 1.0
EMISFACT L0001367     HROFDY 1.0 1.0 1.0 1.0 1.0 1.0
EMISFACT L0001367     HROFDY 1.0 0.0 0.0 0.0 0.0 0.0
EMISFACT L0001368     HROFDY 0.0 0.0 0.0 0.0 0.0 0.0
EMISFACT L0001368     HROFDY 0.0 1.0 1.0 1.0 1.0 1.0
EMISFACT L0001368     HROFDY 1.0 1.0 1.0 1.0 1.0 1.0
EMISFACT L0001368     HROFDY 1.0 0.0 0.0 0.0 0.0 0.0
EMISFACT L0001369     HROFDY 0.0 0.0 0.0 0.0 0.0 0.0
EMISFACT L0001369     HROFDY 0.0 1.0 1.0 1.0 1.0 1.0
EMISFACT L0001369     HROFDY 1.0 1.0 1.0 1.0 1.0 1.0
EMISFACT L0001369     HROFDY 1.0 0.0 0.0 0.0 0.0 0.0
EMISFACT L0001370     HROFDY 0.0 0.0 0.0 0.0 0.0 0.0
EMISFACT L0001370     HROFDY 0.0 1.0 1.0 1.0 1.0 1.0
EMISFACT L0001370     HROFDY 1.0 1.0 1.0 1.0 1.0 1.0
EMISFACT L0001370     HROFDY 1.0 0.0 0.0 0.0 0.0 0.0
```

```
   EMISFACT L0001371     HROFDY 0.0 0.0 0.0 0.0 0.0 0.0
   EMISFACT L0001371     HROFDY 0.0 1.0 1.0 1.0 1.0 1.0
   EMISFACT L0001371     HROFDY 1.0 1.0 1.0 1.0 1.0 1.0
   EMISFACT L0001371     HROFDY 1.0 0.0 0.0 0.0 0.0 0.0
   EMISFACT L0001372     HROFDY 0.0 0.0 0.0 0.0 0.0 0.0
   EMISFACT L0001372     HROFDY 0.0 1.0 1.0 1.0 1.0 1.0
   EMISFACT L0001372     HROFDY 1.0 1.0 1.0 1.0 1.0 1.0
   EMISFACT L0001372     HROFDY 1.0 0.0 0.0 0.0 0.0 0.0
   EMISFACT L0001373     HROFDY 0.0 0.0 0.0 0.0 0.0 0.0
   EMISFACT L0001373     HROFDY 0.0 1.0 1.0 1.0 1.0 1.0
   EMISFACT L0001373     HROFDY 1.0 1.0 1.0 1.0 1.0 1.0
   EMISFACT L0001373     HROFDY 1.0 0.0 0.0 0.0 0.0 0.0
   EMISFACT L0001374     HROFDY 0.0 0.0 0.0 0.0 0.0 0.0
   EMISFACT L0001374     HROFDY 0.0 1.0 1.0 1.0 1.0 1.0
   EMISFACT L0001374     HROFDY 1.0 1.0 1.0 1.0 1.0 1.0
   EMISFACT L0001374     HROFDY 1.0 0.0 0.0 0.0 0.0 0.0
   EMISFACT L0001375     HROFDY 0.0 0.0 0.0 0.0 0.0 0.0
   EMISFACT L0001375     HROFDY 0.0 1.0 1.0 1.0 1.0 1.0
   EMISFACT L0001375     HROFDY 1.0 1.0 1.0 1.0 1.0 1.0
   EMISFACT L0001375     HROFDY 1.0 0.0 0.0 0.0 0.0 0.0
   EMISFACT L0001376     HROFDY 0.0 0.0 0.0 0.0 0.0 0.0
   EMISFACT L0001376     HROFDY 0.0 1.0 1.0 1.0 1.0 1.0
   EMISFACT L0001376     HROFDY 1.0 1.0 1.0 1.0 1.0 1.0
   EMISFACT L0001376     HROFDY 1.0 0.0 0.0 0.0 0.0 0.0
   EMISFACT L0001377     HROFDY 0.0 0.0 0.0 0.0 0.0 0.0
   EMISFACT L0001377     HROFDY 0.0 1.0 1.0 1.0 1.0 1.0
   EMISFACT L0001377     HROFDY 1.0 1.0 1.0 1.0 1.0 1.0
   EMISFACT L0001377     HROFDY 1.0 0.0 0.0 0.0 0.0 0.0
   EMISFACT L0001378     HROFDY 0.0 0.0 0.0 0.0 0.0 0.0
   EMISFACT L0001378     HROFDY 0.0 1.0 1.0 1.0 1.0 1.0
   EMISFACT L0001378     HROFDY 1.0 1.0 1.0 1.0 1.0 1.0
   EMISFACT L0001378     HROFDY 1.0 0.0 0.0 0.0 0.0 0.0
   SRCGROUP ALL
SO FINISHED
**
****************************************
** AERMOD Receptor Pathway
****************************************
**
**
RE STARTING
   INCLUDED "Spreading TOG.rou"
RE FINISHED
**
****************************************
** AERMOD Meteorology Pathway
****************************************
**
**
ME STARTING
   SURFFILE ..\burk8.sfc
   PROFFILE ..\burk8.PFL
   SURFDATA 0 2008 Burbank 378.62 3782.24
   UAIRDATA 3190 2008
   SITEDATA 99999 2008
   PROFBASE 175.0 METERS
ME FINISHED
**
****************************************
** AERMOD Output Pathway
****************************************
**
**
OU STARTING
   RECTABLE ALLAVE 1ST
   RECTABLE 1 1ST
** Auto-Generated Plotfiles
   PLOTFILE 1 ALL 1ST "SPREADING TOG.AD\01H1GALL.PLT" 31
   PLOTFILE ANNUAL ALL "SPREADING TOG.AD\AN00GALL.PLT" 32
   SUMMFILE "Spreading TOG.sum"
OU FINISHED
**
****************************************
** Project Parameters
****************************************
** PROJCTN  CoordinateSystemUTM
```

```
** DESCPTN  UTM: Universal Transverse Mercator
** DATUM    World Geodetic System 1984
** DTMRGN   Global Definition
** UNITS    m
** ZONE     11
** ZONEINX  0
**
```

```
* AERMOD ( 14134): Pacoima Spreading Grounds Improvement Project - Diesel TOG                06/03/15
* AERMET ( 14134):                                                                            16:35:22
* MODELING OPTIONS USED:  RegDFAULT CONC      ELEV
*         PLOT FILE OF  HIGH   1ST HIGH  1-HR VALUES FOR SOURCE GROUP: ALL
*         FOR A TOTAL OF   268 RECEPTORS.
*         FORMAT: (3(1X,F13.5),3(1X,F8.2),3X,A5,2X,A8,2X,A5,5X,A8,2X,I8)
*        X             Y      AVERAGE CONC    ZELEV    ZHILL    ZFLAG    AVE     GRP       RANK     NET ID
DATE(CONC)
*
```

X	Y	AVERAGE CONC	ZELEV	ZHILL	ZFLAG	AVE	GRP	RANK	NET ID	DATE(CONC)
367030.00000	3792240.00000	2.58744	291.74	291.74	0.00	1-HR	ALL	1ST		12121017
366644.00000	3792082.00000	2.04330	288.12	288.12	0.00	1-HR	ALL	1ST		8102818
366494.00000	3791913.00000	2.04401	284.75	284.75	0.00	1-HR	ALL	1ST		9032819
366294.00000	3791729.00000	2.12313	281.09	281.09	0.00	1-HR	ALL	1ST		8102218
366214.00000	3791536.00000	2.04998	278.63	278.63	0.00	1-HR	ALL	1ST		12121017
366272.00000	3791136.00000	1.12038	275.44	275.44	0.00	1-HR	ALL	1ST		9101519
366526.00000	3790962.00000	2.18324	274.47	274.47	0.00	1-HR	ALL	1ST		8093019
367107.00000	3791450.00000	2.44011	282.84	282.84	0.00	1-HR	ALL	1ST		10092719
367095.00000	3791634.00000	1.71812	284.00	284.00	0.00	1-HR	ALL	1ST		8042519
367081.00000	3791995.00000	1.15196	288.61	288.61	0.00	1-HR	ALL	1ST		10092619
367267.00000	3792154.00000	1.51846	292.45	292.45	0.00	1-HR	ALL	1ST		12012819
366189.59000	3791104.07000	0.95945	274.95	274.95	0.00	1-HR	ALL	1ST		10011019
366099.38000	3791247.03000	1.36328	275.48	275.48	0.00	1-HR	ALL	1ST		11011319
366105.02000	3791050.71000	0.86124	274.01	274.01	0.00	1-HR	ALL	1ST		11012219
366014.81000	3791193.67000	1.07415	274.89	274.89	0.00	1-HR	ALL	1ST		11011319
366020.45000	3790997.34000	0.75229	272.77	272.77	0.00	1-HR	ALL	1ST		9112919
365930.24000	3791140.30000	0.85831	274.30	274.30	0.00	1-HR	ALL	1ST		9011108
365935.88000	3790943.98000	0.63151	272.18	272.18	0.00	1-HR	ALL	1ST		9112919
365845.67000	3791086.94000	0.72328	273.71	273.71	0.00	1-HR	ALL	1ST		9011108
365851.31000	3790890.61000	0.53434	271.59	271.59	0.00	1-HR	ALL	1ST		11112518
365761.10000	3791033.57000	0.61763	272.72	272.72	0.00	1-HR	ALL	1ST		9011108
366073.60000	3791341.20000	1.63205	276.50	276.50	0.00	1-HR	ALL	1ST		11012619
365975.61000	3791321.27000	1.06238	276.27	276.27	0.00	1-HR	ALL	1ST		11012619
365889.97000	3791240.60000	0.83849	275.38	275.38	0.00	1-HR	ALL	1ST		10010119
365865.26000	3791362.07000	0.79586	276.53	276.53	0.00	1-HR	ALL	1ST		11011108
365809.87000	3791176.09000	0.71069	274.10	274.10	0.00	1-HR	ALL	1ST		10010119
365779.62000	3791281.40000	0.66735	274.81	274.81	0.00	1-HR	ALL	1ST		12112319
365716.36000	3791145.01000	0.61540	273.96	273.96	0.00	1-HR	ALL	1ST		10010119
365681.63000	3791261.46000	0.57699	274.58	274.58	0.00	1-HR	ALL	1ST		10010819
366076.49000	3791464.13000	1.60683	277.83	277.83	0.00	1-HR	ALL	1ST		12110519
365998.83000	3791527.12000	1.15063	278.50	278.50	0.00	1-HR	ALL	1ST		10102818
365973.42000	3791423.47000	1.06455	277.37	277.37	0.00	1-HR	ALL	1ST		10122719
365921.16000	3791590.12000	0.92776	279.17	279.17	0.00	1-HR	ALL	1ST		8100819
365895.75000	3791486.46000	0.82528	278.04	278.04	0.00	1-HR	ALL	1ST		11110619
365843.50000	3791653.11000	0.76098	279.34	279.34	0.00	1-HR	ALL	1ST		8100819
365818.09000	3791549.45000	0.65084	277.90	277.90	0.00	1-HR	ALL	1ST		11021919
365792.68000	3791445.79000	0.65330	276.59	276.59	0.00	1-HR	ALL	1ST		11120419
365765.83000	3791716.10000	0.65146	279.51	279.51	0.00	1-HR	ALL	1ST		12102719
365740.42000	3791612.44000	0.58030	278.38	278.38	0.00	1-HR	ALL	1ST		8010608
365715.01000	3791508.78000	0.54696	277.26	277.26	0.00	1-HR	ALL	1ST		11011519
365689.60000	3791405.13000	0.55805	276.13	276.13	0.00	1-HR	ALL	1ST		11112819
366137.76000	3791532.55000	2.05554	278.58	278.58	0.00	1-HR	ALL	1ST		12092318
366074.18000	3791605.72000	1.47956	279.36	279.36	0.00	1-HR	ALL	1ST		12092318
366041.61000	3791701.28000	1.18155	280.39	280.39	0.00	1-HR	ALL	1ST		12092318
366003.40000	3791792.77000	0.98620	281.00	281.00	0.00	1-HR	ALL	1ST		10121117
365918.85000	3791731.70000	0.92823	280.70	280.70	0.00	1-HR	ALL	1ST		12100219
365969.76000	3791887.57000	0.84210	281.39	281.39	0.00	1-HR	ALL	1ST		10121117
365890.50000	3791830.32000	0.80733	281.00	281.00	0.00	1-HR	ALL	1ST		12100219
366170.33000	3791697.05000	1.31663	280.36	280.36	0.00	1-HR	ALL	1ST		8112318
365787.57000	3791832.67000	0.68340	280.77	280.77	0.00	1-HR	ALL	1ST		9111019
366252.16000	3791821.78000	1.67125	282.30	282.30	0.00	1-HR	ALL	1ST		12092319
366129.50000	3791817.32000	1.04961	281.13	281.13	0.00	1-HR	ALL	1ST		8020918
366207.76000	3791936.22000	1.05319	283.15	283.15	0.00	1-HR	ALL	1ST		10122108
366085.10000	3791931.75000	0.86924	281.89	281.89	0.00	1-HR	ALL	1ST		9011518
366001.58000	3791986.73000	0.78237	282.47	282.47	0.00	1-HR	ALL	1ST		11100719
365839.78000	3791922.81000	0.71270	281.76	281.76	0.00	1-HR	ALL	1ST		9092419
365918.05000	3792041.71000	0.71963	283.05	283.05	0.00	1-HR	ALL	1ST		10121117
366373.22000	3791926.24000	2.22408	284.88	284.88	0.00	1-HR	ALL	1ST		12121017
366495.46000	3791928.20000	2.00909	284.92	284.92	0.00	1-HR	ALL	1ST		9032819
366325.07000	3792013.88000	1.53752	285.53	285.53	0.00	1-HR	ALL	1ST		12121017
366432.73000	3792027.20000	1.77981	286.95	286.95	0.00	1-HR	ALL	1ST		12101518
366323.47000	3792113.87000	1.34219	287.47	287.47	0.00	1-HR	ALL	1ST		12121017

366195.00000	3792056.52000	0.94994	284.52	284.52	0.00	1-HR	ALL	1ST	8020918
366431.13000	3792127.19000	1.44671	288.06	288.06	0.00	1-HR	ALL	1ST	10110218
366321.86000	3792213.86000	1.15840	287.99	287.99	0.00	1-HR	ALL	1ST	12101419
366228.77000	3792189.18000	1.00882	287.12	287.12	0.00	1-HR	ALL	1ST	11122617
366146.85000	3792144.17000	0.86650	285.56	285.56	0.00	1-HR	ALL	1ST	8020918
366076.09000	3792078.84000	0.79473	283.93	283.93	0.00	1-HR	ALL	1ST	8020918
366429.53000	3792227.18000	1.22104	289.31	289.31	0.00	1-HR	ALL	1ST	10110218
366308.62000	3792310.76000	1.04664	289.47	289.47	0.00	1-HR	ALL	1ST	12101419
366192.26000	3792279.91000	0.90219	287.60	287.60	0.00	1-HR	ALL	1ST	10100919
366089.86000	3792223.65000	0.77394	285.65	285.65	0.00	1-HR	ALL	1ST	8020918
366001.41000	3792141.99000	0.71648	284.15	284.15	0.00	1-HR	ALL	1ST	9011318
366427.92000	3792327.17000	1.07328	291.21	291.21	0.00	1-HR	ALL	1ST	12012818
366397.15000	3791832.50000	2.91092	283.82	283.82	0.00	1-HR	ALL	1ST	12101518
366575.11000	3792149.95000	1.34401	288.65	288.65	0.00	1-HR	ALL	1ST	10032019
366668.93000	3792173.57000	2.04252	289.60	289.60	0.00	1-HR	ALL	1ST	12092318
366762.76000	3792197.19000	2.44883	290.25	290.25	0.00	1-HR	ALL	1ST	12101518
366550.70000	3792246.93000	1.19260	290.37	290.37	0.00	1-HR	ALL	1ST	9111118
366644.52000	3792270.55000	1.46278	290.64	290.64	0.00	1-HR	ALL	1ST	8121117
366738.34000	3792294.17000	1.61316	291.83	291.83	0.00	1-HR	ALL	1ST	12101518
366526.28000	3792343.90000	1.07901	291.42	291.42	0.00	1-HR	ALL	1ST	12092318
366620.11000	3792367.52000	1.16317	291.69	291.69	0.00	1-HR	ALL	1ST	8011018
366713.93000	3792391.14000	1.20407	292.66	292.66	0.00	1-HR	ALL	1ST	10110218
366408.05000	3792417.26000	0.97108	291.96	291.96	0.00	1-HR	ALL	1ST	9022819
366501.87000	3792440.88000	0.94697	292.46	292.46	0.00	1-HR	ALL	1ST	10110218
366595.69000	3792464.50000	0.97235	292.84	292.84	0.00	1-HR	ALL	1ST	8011218
366689.52000	3792488.12000	1.01194	294.00	294.00	0.00	1-HR	ALL	1ST	8100818
366317.23000	3792471.96000	0.89989	292.06	292.06	0.00	1-HR	ALL	1ST	12101419
366184.43000	3792387.41000	0.83747	288.64	288.64	0.00	1-HR	ALL	1ST	10100919
366477.46000	3792537.85000	0.85810	293.81	293.81	0.00	1-HR	ALL	1ST	12012818
366571.28000	3792561.47000	0.86686	294.56	294.56	0.00	1-HR	ALL	1ST	8011218
366665.10000	3792585.09000	0.89735	295.10	295.10	0.00	1-HR	ALL	1ST	8100818
366862.54000	3792165.94000	2.63563	290.54	290.54	0.00	1-HR	ALL	1ST	8092418
366932.33000	3792085.91000	1.80439	289.69	289.69	0.00	1-HR	ALL	1ST	8022618
366907.59000	3792251.47000	2.04663	291.95	291.95	0.00	1-HR	ALL	1ST	8092418
366979.16000	3792319.67000	1.65713	293.23	293.23	0.00	1-HR	ALL	1ST	11121017
366836.11000	3792387.67000	1.53503	293.24	293.24	0.00	1-HR	ALL	1ST	8042519
367048.17000	3792257.38000	2.55976	292.16	292.16	0.00	1-HR	ALL	1ST	12120317
367052.26000	3792386.88000	1.57397	293.96	293.96	0.00	1-HR	ALL	1ST	12120317
366943.10000	3792458.17000	1.33685	294.72	294.72	0.00	1-HR	ALL	1ST	10032019
366819.84000	3792484.41000	1.25479	294.97	294.97	0.00	1-HR	ALL	1ST	12111218
367123.54000	3792323.10000	2.14156	293.34	293.34	0.00	1-HR	ALL	1ST	8092418
367126.11000	3792453.60000	1.43506	295.46	295.46	0.00	1-HR	ALL	1ST	9082419
367050.31000	3792503.10000	1.22464	295.29	295.29	0.00	1-HR	ALL	1ST	12010218
366974.51000	3792552.61000	1.18523	295.74	295.74	0.00	1-HR	ALL	1ST	10032019
366846.10000	3792579.94000	1.12441	296.03	296.03	0.00	1-HR	ALL	1ST	11011618
366755.60000	3792582.52000	1.02744	295.28	295.28	0.00	1-HR	ALL	1ST	10110218
367198.90000	3792388.83000	1.84627	295.01	295.01	0.00	1-HR	ALL	1ST	8092418
366792.31000	3792096.48000	3.55440	289.39	289.39	0.00	1-HR	ALL	1ST	8092418
367147.25000	3792560.30000	1.24154	297.18	297.18	0.00	1-HR	ALL	1ST	8041119
367112.95000	3792654.23000	1.11320	298.59	298.59	0.00	1-HR	ALL	1ST	9102319
366995.52000	3792648.16000	1.08129	297.56	297.56	0.00	1-HR	ALL	1ST	10121217
367243.10000	3792639.28000	1.20292	299.13	299.13	0.00	1-HR	ALL	1ST	9102618
367122.70000	3792750.44000	1.02182	299.87	299.87	0.00	1-HR	ALL	1ST	9102319
366975.90000	3792742.85000	0.99209	298.80	298.80	0.00	1-HR	ALL	1ST	8110619
366843.93000	3792694.67000	0.98695	297.78	297.78	0.00	1-HR	ALL	1ST	11011618
367267.52000	3792736.25000	1.11098	300.74	300.74	0.00	1-HR	ALL	1ST	12010218
367236.79000	3792266.23000	2.24386	294.06	294.06	0.00	1-HR	ALL	1ST	8022618
367334.23000	3792243.75000	1.58014	293.92	293.92	0.00	1-HR	ALL	1ST	10092619
367431.67000	3792221.28000	1.18920	294.25	294.25	0.00	1-HR	ALL	1ST	10092619
367413.49000	3792333.23000	1.43490	295.73	295.73	0.00	1-HR	ALL	1ST	9012018
367370.92000	3792430.27000	1.48859	296.36	296.36	0.00	1-HR	ALL	1ST	10101818
367279.58000	3792497.49000	1.47885	297.19	297.19	0.00	1-HR	ALL	1ST	8092418
367528.25000	3792204.13000	0.96739	294.45	294.45	0.00	1-HR	ALL	1ST	8102219
367507.47000	3792332.08000	1.20112	296.47	296.47	0.00	1-HR	ALL	1ST	10121218
367451.89000	3792485.63000	1.33716	298.37	298.37	0.00	1-HR	ALL	1ST	12011318
367347.50000	3792562.45000	1.32751	297.91	297.91	0.00	1-HR	ALL	1ST	12111618
367625.88000	3792180.47000	0.83235	294.82	294.82	0.00	1-HR	ALL	1ST	8102219
367605.68000	3792304.86000	1.02424	296.32	296.32	0.00	1-HR	ALL	1ST	10092619
367585.48000	3792429.25000	1.14842	298.50	298.50	0.00	1-HR	ALL	1ST	9012018
367538.18000	3792537.07000	1.19794	299.28	299.28	0.00	1-HR	ALL	1ST	10010818
367436.69000	3792611.76000	1.23299	299.49	299.49	0.00	1-HR	ALL	1ST	9022219

367138.03000	3792115.65000	2.02339	291.05	291.05	0.00	1-HR	ALL	1ST	8092519
367218.18000	3792165.58000	1.89242	292.32	292.32	0.00	1-HR	ALL	1ST	12012819
367115.23000	3792018.29000	1.29567	288.99	288.99	0.00	1-HR	ALL	1ST	12010108
367216.12000	3792034.94000	1.01371	290.24	290.24	0.00	1-HR	ALL	1ST	11030519
367285.91000	3792101.50000	1.16580	291.82	291.82	0.00	1-HR	ALL	1ST	12111317
367092.44000	3791920.92000	0.97600	287.65	287.65	0.00	1-HR	ALL	1ST	10092619
367193.33000	3791937.57000	0.87100	289.12	289.12	0.00	1-HR	ALL	1ST	10110417
367309.07000	3791975.02000	0.81936	289.55	289.55	0.00	1-HR	ALL	1ST	12101418
367368.50000	3792058.23000	0.81927	291.07	291.07	0.00	1-HR	ALL	1ST	8102219
367069.65000	3791823.55000	0.99261	286.26	286.26	0.00	1-HR	ALL	1ST	10110218
367170.53000	3791840.20000	0.93678	287.12	287.12	0.00	1-HR	ALL	1ST	9020318
367271.42000	3791856.85000	0.97320	288.26	288.26	0.00	1-HR	ALL	1ST	8092418
367361.94000	3791890.14000	0.89639	288.79	288.79	0.00	1-HR	ALL	1ST	8120618
367421.37000	3791973.35000	0.80921	290.55	290.55	0.00	1-HR	ALL	1ST	8120618
367480.79000	3792056.55000	0.74788	292.22	292.22	0.00	1-HR	ALL	1ST	9042019
367046.85000	3791726.18000	1.23062	284.81	284.81	0.00	1-HR	ALL	1ST	12120317
367147.74000	3791742.83000	1.14503	285.49	285.49	0.00	1-HR	ALL	1ST	9032819
367248.62000	3791759.48000	1.14711	286.37	286.37	0.00	1-HR	ALL	1ST	8111917
367349.51000	3791776.13000	1.01429	286.86	286.86	0.00	1-HR	ALL	1ST	10101818
367429.67000	3791826.06000	0.90343	288.09	288.09	0.00	1-HR	ALL	1ST	12011318
367489.09000	3791909.27000	0.81842	289.85	289.85	0.00	1-HR	ALL	1ST	11100919
367548.52000	3791992.47000	0.74221	291.69	291.69	0.00	1-HR	ALL	1ST	11100919
367607.95000	3792075.68000	0.69851	293.36	293.36	0.00	1-HR	ALL	1ST	9042019
367224.16000	3791655.67000	1.44914	285.08	285.08	0.00	1-HR	ALL	1ST	9082519
367382.18000	3791675.47000	1.03414	285.86	285.86	0.00	1-HR	ALL	1ST	10092619
367296.14000	3791586.25000	1.23130	284.34	284.34	0.00	1-HR	ALL	1ST	10122919
367014.86000	3791995.11000	1.24057	288.44	288.44	0.00	1-HR	ALL	1ST	10092619
367518.41000	3791796.26000	0.85943	288.84	288.84	0.00	1-HR	ALL	1ST	9012018
367529.79000	3791699.50000	0.87632	287.39	287.39	0.00	1-HR	ALL	1ST	10092619
367201.26000	3791534.06000	1.83573	283.76	283.76	0.00	1-HR	ALL	1ST	12012819
367175.42000	3791412.71000	1.49242	282.44	282.44	0.00	1-HR	ALL	1ST	11093018
367100.98000	3791351.05000	1.38318	281.76	281.76	0.00	1-HR	ALL	1ST	12010108
367026.54000	3791289.40000	1.05597	281.08	281.08	0.00	1-HR	ALL	1ST	10011718
366952.10000	3791227.75000	0.78078	280.41	280.41	0.00	1-HR	ALL	1ST	10011019
366877.67000	3791166.10000	0.79923	279.73	279.73	0.00	1-HR	ALL	1ST	10092619
366803.23000	3791104.44000	0.84085	278.16	278.16	0.00	1-HR	ALL	1ST	10092619
366728.79000	3791042.79000	0.99102	277.37	277.37	0.00	1-HR	ALL	1ST	12012819
366654.35000	3790981.14000	1.13692	275.89	275.89	0.00	1-HR	ALL	1ST	12111317
366579.91000	3790919.49000	1.41740	274.25	274.25	0.00	1-HR	ALL	1ST	11030519
366505.48000	3790857.84000	1.59261	273.34	273.34	0.00	1-HR	ALL	1ST	12010108
367273.22000	3791391.88000	1.02321	282.23	282.23	0.00	1-HR	ALL	1ST	11121519
367164.77000	3791274.04000	0.98238	280.94	280.94	0.00	1-HR	ALL	1ST	12123108
367090.33000	3791212.39000	0.86852	280.26	280.26	0.00	1-HR	ALL	1ST	11010608
367015.89000	3791150.73000	0.72717	279.58	279.58	0.00	1-HR	ALL	1ST	10011718
366941.45000	3791089.08000	0.66256	278.91	278.91	0.00	1-HR	ALL	1ST	8102219
366867.01000	3791027.43000	0.72294	278.18	278.18	0.00	1-HR	ALL	1ST	10100119
366792.58000	3790965.78000	0.74412	276.55	276.55	0.00	1-HR	ALL	1ST	12010119
366718.14000	3790904.12000	0.83101	275.87	275.87	0.00	1-HR	ALL	1ST	11011818
366643.70000	3790842.47000	0.94437	274.27	274.27	0.00	1-HR	ALL	1ST	10012908
366569.26000	3790780.82000	1.02086	272.63	272.63	0.00	1-HR	ALL	1ST	12010108
367337.01000	3791314.86000	0.79368	281.41	281.41	0.00	1-HR	ALL	1ST	10012408
367396.87000	3791492.41000	0.90812	283.34	283.34	0.00	1-HR	ALL	1ST	9020108
367228.55000	3791197.02000	0.76505	280.12	280.12	0.00	1-HR	ALL	1ST	11011208
367154.11000	3791135.37000	0.71391	279.44	279.44	0.00	1-HR	ALL	1ST	10010408
367079.68000	3791073.72000	0.63898	278.76	278.76	0.00	1-HR	ALL	1ST	9122019
367005.24000	3791012.07000	0.57019	278.08	278.08	0.00	1-HR	ALL	1ST	8111819
366930.80000	3790950.41000	0.59007	277.40	277.40	0.00	1-HR	ALL	1ST	12010417
366856.36000	3790888.76000	0.62553	276.57	276.57	0.00	1-HR	ALL	1ST	12091319
366781.93000	3790827.11000	0.63983	275.05	275.05	0.00	1-HR	ALL	1ST	11121008
366707.49000	3790765.46000	0.73254	274.29	274.29	0.00	1-HR	ALL	1ST	11020908
366633.05000	3790703.81000	0.77324	272.36	272.36	0.00	1-HR	ALL	1ST	11011208
367412.14000	3791256.58000	0.64952	280.79	280.79	0.00	1-HR	ALL	1ST	10012408
367491.96000	3791493.30000	0.76028	283.73	283.73	0.00	1-HR	ALL	1ST	9020108
367292.34000	3791120.01000	0.62754	279.29	279.29	0.00	1-HR	ALL	1ST	10120108
367217.90000	3791058.36000	0.60067	278.62	278.62	0.00	1-HR	ALL	1ST	8122908
367143.46000	3790996.70000	0.56001	277.94	277.94	0.00	1-HR	ALL	1ST	8122108
367069.03000	3790935.05000	0.52086	277.26	277.26	0.00	1-HR	ALL	1ST	12012318
366994.59000	3790873.40000	0.50261	276.85	276.85	0.00	1-HR	ALL	1ST	12091319
366920.15000	3790811.75000	0.50787	275.90	275.90	0.00	1-HR	ALL	1ST	10021408
366845.71000	3790750.10000	0.54176	274.95	274.95	0.00	1-HR	ALL	1ST	10012408
366771.27000	3790688.44000	0.58902	273.55	273.55	0.00	1-HR	ALL	1ST	11011608

366696.84000	3790626.79000	0.62379	272.38	272.38	0.00	1-HR	ALL	1ST	11011208
367473.09000	3791174.88000	0.54901	280.74	280.74	0.00	1-HR	ALL	1ST	10012408
367558.14000	3791315.34000	0.56851	282.35	282.35	0.00	1-HR	ALL	1ST	11022619
367590.44000	3791467.04000	0.65994	284.09	284.09	0.00	1-HR	ALL	1ST	8020608
367356.13000	3791042.99000	0.53169	278.47	278.47	0.00	1-HR	ALL	1ST	8120808
367281.69000	3790981.34000	0.51874	277.79	277.79	0.00	1-HR	ALL	1ST	12020408
367207.25000	3790919.69000	0.49862	277.11	277.11	0.00	1-HR	ALL	1ST	10011708
367132.81000	3790858.04000	0.46925	277.00	277.00	0.00	1-HR	ALL	1ST	9011608
367058.37000	3790796.39000	0.44227	276.76	276.76	0.00	1-HR	ALL	1ST	12021008
366983.94000	3790734.73000	0.44463	275.61	275.61	0.00	1-HR	ALL	1ST	8020808
366909.50000	3790673.08000	0.46988	274.40	274.40	0.00	1-HR	ALL	1ST	9013008
366835.06000	3790611.43000	0.50055	273.17	273.17	0.00	1-HR	ALL	1ST	10122408
366760.62000	3790549.78000	0.52056	271.71	271.71	0.00	1-HR	ALL	1ST	11011208
366366.76000	3790868.62000	1.61309	272.86	272.86	0.00	1-HR	ALL	1ST	9010919
366301.28000	3790942.71000	1.50182	273.82	273.82	0.00	1-HR	ALL	1ST	8102218
366235.80000	3791016.79000	1.08371	274.01	274.01	0.00	1-HR	ALL	1ST	8031119
366359.01000	3790768.93000	1.11236	271.35	271.35	0.00	1-HR	ALL	1ST	10011019
366226.35000	3790876.48000	0.94227	272.50	272.50	0.00	1-HR	ALL	1ST	8011219
366160.87000	3790950.57000	0.77789	273.12	273.12	0.00	1-HR	ALL	1ST	8021119
366284.08000	3790702.70000	0.86347	270.62	270.62	0.00	1-HR	ALL	1ST	11012219
366489.97000	3790658.44000	0.83803	270.29	270.29	0.00	1-HR	ALL	1ST	12121919
366151.43000	3790810.26000	0.71899	271.44	271.44	0.00	1-HR	ALL	1ST	11012819
366085.95000	3790884.34000	0.63035	271.56	271.56	0.00	1-HR	ALL	1ST	11012219
366209.15000	3790636.48000	0.69308	269.90	269.90	0.00	1-HR	ALL	1ST	11012219
366343.50000	3790569.53000	0.70257	269.19	269.19	0.00	1-HR	ALL	1ST	8112019
366482.21000	3790558.74000	0.68565	269.10	269.10	0.00	1-HR	ALL	1ST	9121608
366076.50000	3790744.03000	0.58387	270.04	270.04	0.00	1-HR	ALL	1ST	11011319
366011.02000	3790818.12000	0.57392	270.83	270.83	0.00	1-HR	ALL	1ST	9112919
366151.02000	3790561.88000	0.59395	269.08	269.08	0.00	1-HR	ALL	1ST	11012219
366234.98000	3790520.04000	0.60946	268.64	268.64	0.00	1-HR	ALL	1ST	10011019
366318.95000	3790478.20000	0.60676	268.20	268.20	0.00	1-HR	ALL	1ST	8112019
366492.34000	3790464.71000	0.58395	268.08	268.08	0.00	1-HR	ALL	1ST	9121608
366581.77000	3790493.07000	0.58029	268.74	268.74	0.00	1-HR	ALL	1ST	8122108
366671.20000	3790521.42000	0.55575	270.22	270.22	0.00	1-HR	ALL	1ST	8122908
366067.05000	3790603.72000	0.55294	269.13	269.13	0.00	1-HR	ALL	1ST	9112919
366001.57000	3790677.81000	0.52076	269.31	269.31	0.00	1-HR	ALL	1ST	11112518
365936.09000	3790751.89000	0.52270	270.10	270.10	0.00	1-HR	ALL	1ST	9112919
366441.69000	3790934.85000	2.00023	274.16	274.16	0.00	1-HR	ALL	1ST	12121319
367111.63000	3791489.72000	2.73733	283.27	283.27	0.00	1-HR	ALL	1ST	8093019
367032.23000	3791650.21000	1.63281	284.00	284.00	0.00	1-HR	ALL	1ST	12121017
367026.80000	3791705.02000	1.31641	284.58	284.58	0.00	1-HR	ALL	1ST	12121017
367004.60000	3791824.64000	0.99210	285.87	285.87	0.00	1-HR	ALL	1ST	12121017
366979.97000	3791877.66000	1.08000	286.44	286.44	0.00	1-HR	ALL	1ST	10092619
366936.23000	3791933.33000	1.26094	287.08	287.08	0.00	1-HR	ALL	1ST	10092619
367022.27000	3792022.55000	1.42989	289.02	289.02	0.00	1-HR	ALL	1ST	12121319
367109.97000	3792214.86000	3.53085	292.02	292.02	0.00	1-HR	ALL	1ST	9082519
367135.60000	3792208.86000	3.26117	292.29	292.29	0.00	1-HR	ALL	1ST	8022618
367145.41000	3792251.39000	2.93386	292.87	292.87	0.00	1-HR	ALL	1ST	9082519
367073.98000	3792269.38000	2.47515	292.52	292.52	0.00	1-HR	ALL	1ST	8042519
366953.47000	3792101.98000	1.84056	289.87	289.87	0.00	1-HR	ALL	1ST	8022618
366856.96000	3792020.19000	2.01979	288.58	288.58	0.00	1-HR	ALL	1ST	8093019
366787.17000	3792100.22000	3.53627	289.41	289.41	0.00	1-HR	ALL	1ST	8092418
366505.70000	3792029.36000	1.66547	287.01	287.01	0.00	1-HR	ALL	1ST	10111218
366497.06000	3791828.21000	2.10806	283.83	283.83	0.00	1-HR	ALL	1ST	8022618
366374.82000	3791826.25000	2.57855	283.67	283.67	0.00	1-HR	ALL	1ST	10010717
366257.42000	3791647.90000	1.47824	279.85	279.85	0.00	1-HR	ALL	1ST	11102719
366223.02000	3791586.94000	1.66101	279.18	279.18	0.00	1-HR	ALL	1ST	12121017
366218.11000	3791478.88000	2.50993	278.01	278.01	0.00	1-HR	ALL	1ST	9093018
366207.45000	3791452.00000	2.51237	277.72	277.72	0.00	1-HR	ALL	1ST	10010717
366173.15000	3791439.02000	2.89183	277.57	277.57	0.00	1-HR	ALL	1ST	11090619
366159.24000	3791421.87000	2.72800	277.39	277.39	0.00	1-HR	ALL	1ST	12092319
366183.95000	3791300.40000	2.25045	277.00	277.00	0.00	1-HR	ALL	1ST	9010919
366274.16000	3791157.44000	1.12673	275.64	275.64	0.00	1-HR	ALL	1ST	8092419
366310.73000	3791083.02000	1.51598	275.44	275.44	0.00	1-HR	ALL	1ST	8100719

** CONCUNIT ug/m^3
** DEPUNIT g/m^2

APPENDIX I

AERMOD Model Diesel TOG Printouts for Pits Area

```
**
****************************************
**
** AERMOD Input Produced by:
** AERMOD View Ver. 8.7.0
** Lakes Environmental Software Inc.
** Date: 9/25/2014
** File: C:\Vista Env\2013\13001 Pacoima\AERMOD\Pit TOG\Pit TOG.ADI
**
****************************************
**
**
****************************************
** AERMOD Control Pathway
****************************************
**
**
CO STARTING
   TITLEONE Pacoima Spreading Grounds Improvement Project
   TITLETWO I-5 to Sheldon and Cal-Mat Pits Area - TOG Diesel Emissions
   MODELOPT DFAULT CONC
   AVERTIME 1 ANNUAL
   URBANOPT 9682049 Los_Angeles_County
   POLLUTID TOG
   RUNORNOT RUN
   ERRORFIL "Pit TOG.err"
CO FINISHED
**
****************************************
** AERMOD Source Pathway
****************************************
**
**
SO STARTING
** Source Location **
** Source ID - Type - X Coord. - Y Coord. **
** -------------------------------------------------------------------
** Line Source Represented by Separated Volume Sources
** LINE VOLUME Source ID = RDOFFSITE
** DESCRSRC Offsite haul trucks
** PREFIX
** Length of Side = 12.19
** Configuration = Separated
** Emission Rate = 0.00002453
** Vertical Dimension = 1.83
** SZINIT = 0.85
** Nodes = 8
** 370960.473, 3788559.476, 256.69, 1.83, 11.31
** 370925.715, 3788532.618, 255.88, 1.83, 11.31
** 370717.956, 3788772.764, 257.02, 1.83, 11.31
** 371023.330, 3789030.263, 262.93, 1.83, 11.31
** 371650.691, 3789568.683, 272.76, 1.83, 11.31
** 372565.262, 3790347.088, 280.83, 1.83, 11.31
** 372834.045, 3790579.807, 285.90, 1.83, 11.31
** 372722.382, 3790746.185, 288.95, 1.83, 11.31
** -------------------------------------------------------------------
   LOCATION L0000001     VOLUME   370955.649 3788555.749 256.58
   LOCATION L0000002     VOLUME   370936.402 3788540.876 256.13
   LOCATION L0000003     VOLUME   370918.637 3788540.799 255.92
   LOCATION L0000004     VOLUME   370902.723 3788559.194 256.01
   LOCATION L0000005     VOLUME   370886.809 3788577.589 256.09
   LOCATION L0000006     VOLUME   370870.895 3788595.984 256.18
   LOCATION L0000007     VOLUME   370854.981 3788614.379 256.27
   LOCATION L0000008     VOLUME   370839.066 3788632.774 256.36
   LOCATION L0000009     VOLUME   370823.152 3788651.169 256.44
   LOCATION L0000010     VOLUME   370807.238 3788669.564 256.53
   LOCATION L0000011     VOLUME   370791.324 3788687.959 256.62
   LOCATION L0000012     VOLUME   370775.410 3788706.354 256.70
   LOCATION L0000013     VOLUME   370759.495 3788724.749 256.79
   LOCATION L0000014     VOLUME   370743.581 3788743.145 256.88
   LOCATION L0000015     VOLUME   370727.667 3788761.540 256.97
   LOCATION L0000016     VOLUME   370725.205 3788778.876 257.16
   LOCATION L0000017     VOLUME   370743.800 3788794.556 257.52
   LOCATION L0000018     VOLUME   370762.395 3788810.236 257.88
   LOCATION L0000019     VOLUME   370780.990 3788825.916 258.24
   LOCATION L0000020     VOLUME   370799.585 3788841.596 258.60
   LOCATION L0000021     VOLUME   370818.181 3788857.276 258.96
   LOCATION L0000022     VOLUME   370836.776 3788872.956 259.32
   LOCATION L0000023     VOLUME   370855.371 3788888.636 259.68
   LOCATION L0000024     VOLUME   370873.966 3788904.316 260.04
   LOCATION L0000025     VOLUME   370892.561 3788919.996 260.40
```

LOCATION	L0000026	VOLUME	370911.157	3788935.675	260.76
LOCATION	L0000027	VOLUME	370929.752	3788951.355	261.12
LOCATION	L0000028	VOLUME	370948.347	3788967.035	261.48
LOCATION	L0000029	VOLUME	370966.942	3788982.715	261.84
LOCATION	L0000030	VOLUME	370985.537	3788998.395	262.20
LOCATION	L0000031	VOLUME	371004.132	3789014.075	262.56
LOCATION	L0000032	VOLUME	371022.728	3789029.755	262.92
LOCATION	L0000033	VOLUME	371041.190	3789045.591	263.21
LOCATION	L0000034	VOLUME	371059.648	3789061.432	263.50
LOCATION	L0000035	VOLUME	371078.106	3789077.273	263.79
LOCATION	L0000036	VOLUME	371096.564	3789093.114	264.08
LOCATION	L0000037	VOLUME	371115.022	3789108.956	264.37
LOCATION	L0000038	VOLUME	371133.480	3789124.797	264.66
LOCATION	L0000039	VOLUME	371151.938	3789140.638	264.95
LOCATION	L0000040	VOLUME	371170.396	3789156.479	265.23
LOCATION	L0000041	VOLUME	371188.854	3789172.320	265.52
LOCATION	L0000042	VOLUME	371207.312	3789188.162	265.81
LOCATION	L0000043	VOLUME	371225.770	3789204.003	266.10
LOCATION	L0000044	VOLUME	371244.228	3789219.844	266.39
LOCATION	L0000045	VOLUME	371262.686	3789235.685	266.68
LOCATION	L0000046	VOLUME	371281.144	3789251.526	266.97
LOCATION	L0000047	VOLUME	371299.602	3789267.367	267.26
LOCATION	L0000048	VOLUME	371318.060	3789283.209	267.55
LOCATION	L0000049	VOLUME	371336.518	3789299.050	267.84
LOCATION	L0000050	VOLUME	371354.976	3789314.891	268.13
LOCATION	L0000051	VOLUME	371373.434	3789330.732	268.42
LOCATION	L0000052	VOLUME	371391.892	3789346.573	268.70
LOCATION	L0000053	VOLUME	371410.350	3789362.415	268.99
LOCATION	L0000054	VOLUME	371428.808	3789378.256	269.28
LOCATION	L0000055	VOLUME	371447.266	3789394.097	269.57
LOCATION	L0000056	VOLUME	371465.724	3789409.938	269.86
LOCATION	L0000057	VOLUME	371484.182	3789425.779	270.15
LOCATION	L0000058	VOLUME	371502.639	3789441.620	270.44
LOCATION	L0000059	VOLUME	371521.097	3789457.462	270.73
LOCATION	L0000060	VOLUME	371539.555	3789473.303	271.02
LOCATION	L0000061	VOLUME	371558.013	3789489.144	271.31
LOCATION	L0000062	VOLUME	371576.471	3789504.985	271.60
LOCATION	L0000063	VOLUME	371594.929	3789520.826	271.89
LOCATION	L0000064	VOLUME	371613.387	3789536.668	272.18
LOCATION	L0000065	VOLUME	371631.845	3789552.509	272.46
LOCATION	L0000066	VOLUME	371650.303	3789568.350	272.75
LOCATION	L0000067	VOLUME	371668.825	3789584.117	272.92
LOCATION	L0000068	VOLUME	371687.348	3789599.882	273.08
LOCATION	L0000069	VOLUME	371705.871	3789615.647	273.25
LOCATION	L0000070	VOLUME	371724.394	3789631.412	273.41
LOCATION	L0000071	VOLUME	371742.917	3789647.177	273.57
LOCATION	L0000072	VOLUME	371761.440	3789662.942	273.74
LOCATION	L0000073	VOLUME	371779.963	3789678.708	273.90
LOCATION	L0000074	VOLUME	371798.486	3789694.473	274.06
LOCATION	L0000075	VOLUME	371817.009	3789710.238	274.23
LOCATION	L0000076	VOLUME	371835.531	3789726.003	274.39
LOCATION	L0000077	VOLUME	371854.054	3789741.768	274.55
LOCATION	L0000078	VOLUME	371872.577	3789757.533	274.72
LOCATION	L0000079	VOLUME	371891.100	3789773.299	274.88
LOCATION	L0000080	VOLUME	371909.623	3789789.064	275.04
LOCATION	L0000081	VOLUME	371928.146	3789804.829	275.21
LOCATION	L0000082	VOLUME	371946.669	3789820.594	275.37
LOCATION	L0000083	VOLUME	371965.192	3789836.359	275.54
LOCATION	L0000084	VOLUME	371983.715	3789852.124	275.70
LOCATION	L0000085	VOLUME	372002.238	3789867.890	275.86
LOCATION	L0000086	VOLUME	372020.761	3789883.655	276.03
LOCATION	L0000087	VOLUME	372039.284	3789899.420	276.19
LOCATION	L0000088	VOLUME	372057.807	3789915.185	276.35
LOCATION	L0000089	VOLUME	372076.330	3789930.950	276.52
LOCATION	L0000090	VOLUME	372094.853	3789946.715	276.68
LOCATION	L0000091	VOLUME	372113.376	3789962.481	276.84
LOCATION	L0000092	VOLUME	372131.899	3789978.246	277.01
LOCATION	L0000093	VOLUME	372150.422	3789994.011	277.17
LOCATION	L0000094	VOLUME	372168.945	3790009.776	277.33
LOCATION	L0000095	VOLUME	372187.467	3790025.541	277.50
LOCATION	L0000096	VOLUME	372205.990	3790041.306	277.66
LOCATION	L0000097	VOLUME	372224.513	3790057.072	277.82
LOCATION	L0000098	VOLUME	372243.036	3790072.837	277.99
LOCATION	L0000099	VOLUME	372261.559	3790088.602	278.15
LOCATION	L0000100	VOLUME	372280.082	3790104.367	278.31
LOCATION	L0000101	VOLUME	372298.605	3790120.132	278.48
LOCATION	L0000102	VOLUME	372317.128	3790135.897	278.64
LOCATION	L0000103	VOLUME	372335.651	3790151.663	278.80
LOCATION	L0000104	VOLUME	372354.174	3790167.428	278.97
LOCATION	L0000105	VOLUME	372372.697	3790183.193	279.13
LOCATION	L0000106	VOLUME	372391.220	3790198.958	279.29

```
   LOCATION L0000107     VOLUME   372409.743 3790214.723 279.46
   LOCATION L0000108     VOLUME   372428.266 3790230.488 279.62
   LOCATION L0000109     VOLUME   372446.789 3790246.254 279.78
   LOCATION L0000110     VOLUME   372465.312 3790262.019 279.95
   LOCATION L0000111     VOLUME   372483.835 3790277.784 280.11
   LOCATION L0000112     VOLUME   372502.358 3790293.549 280.27
   LOCATION L0000113     VOLUME   372520.881 3790309.314 280.44
   LOCATION L0000114     VOLUME   372539.404 3790325.079 280.60
   LOCATION L0000115     VOLUME   372557.926 3790340.845 280.77
   LOCATION L0000116     VOLUME   372576.368 3790356.704 281.04
   LOCATION L0000117     VOLUME   372594.757 3790372.626 281.39
   LOCATION L0000118     VOLUME   372613.146 3790388.547 281.73
   LOCATION L0000119     VOLUME   372631.535 3790404.469 282.08
   LOCATION L0000120     VOLUME   372649.924 3790420.390 282.43
   LOCATION L0000121     VOLUME   372668.312 3790436.311 282.77
   LOCATION L0000122     VOLUME   372686.701 3790452.233 283.12
   LOCATION L0000123     VOLUME   372705.090 3790468.154 283.47
   LOCATION L0000124     VOLUME   372723.479 3790484.076 283.81
   LOCATION L0000125     VOLUME   372741.867 3790499.997 284.16
   LOCATION L0000126     VOLUME   372760.256 3790515.919 284.51
   LOCATION L0000127     VOLUME   372778.645 3790531.840 284.85
   LOCATION L0000128     VOLUME   372797.034 3790547.762 285.20
   LOCATION L0000129     VOLUME   372815.423 3790563.683 285.55
   LOCATION L0000130     VOLUME   372833.811 3790579.605 285.90
   LOCATION L0000131     VOLUME   372820.663 3790599.747 286.27
   LOCATION L0000132     VOLUME   372807.108 3790619.944 286.64
   LOCATION L0000133     VOLUME   372793.553 3790640.140 287.01
   LOCATION L0000134     VOLUME   372779.999 3790660.337 287.38
   LOCATION L0000135     VOLUME   372766.444 3790680.534 287.75
   LOCATION L0000136     VOLUME   372752.889 3790700.730 288.12
   LOCATION L0000137     VOLUME   372739.334 3790720.927 288.49
   LOCATION L0000138     VOLUME   372725.779 3790741.124 288.86
** End of LINE VOLUME Source ID = RDOFFSITE
   LOCATION IDLESHEL     POINT      372629.700  3790720.500      288.550
** DESCRSRC Haul truck idling at Sheldon Pit
   LOCATION IDLECAL      POINT      373018.290  3790188.990      284.570
** DESCRSRC Haul trucks Idling at Cal-Mat Pit
** Source Parameters **
** LINE VOLUME Source ID = RDOFFSITE
   SRCPARAM L0000001     0.0000001778      1.83     11.31      0.85
   SRCPARAM L0000002     0.0000001778      1.83     11.31      0.85
   SRCPARAM L0000003     0.0000001778      1.83     11.31      0.85
   SRCPARAM L0000004     0.0000001778      1.83     11.31      0.85
   SRCPARAM L0000005     0.0000001778      1.83     11.31      0.85
   SRCPARAM L0000006     0.0000001778      1.83     11.31      0.85
   SRCPARAM L0000007     0.0000001778      1.83     11.31      0.85
   SRCPARAM L0000008     0.0000001778      1.83     11.31      0.85
   SRCPARAM L0000009     0.0000001778      1.83     11.31      0.85
   SRCPARAM L0000010     0.0000001778      1.83     11.31      0.85
   SRCPARAM L0000011     0.0000001778      1.83     11.31      0.85
   SRCPARAM L0000012     0.0000001778      1.83     11.31      0.85
   SRCPARAM L0000013     0.0000001778      1.83     11.31      0.85
   SRCPARAM L0000014     0.0000001778      1.83     11.31      0.85
   SRCPARAM L0000015     0.0000001778      1.83     11.31      0.85
   SRCPARAM L0000016     0.0000001778      1.83     11.31      0.85
   SRCPARAM L0000017     0.0000001778      1.83     11.31      0.85
   SRCPARAM L0000018     0.0000001778      1.83     11.31      0.85
   SRCPARAM L0000019     0.0000001778      1.83     11.31      0.85
   SRCPARAM L0000020     0.0000001778      1.83     11.31      0.85
   SRCPARAM L0000021     0.0000001778      1.83     11.31      0.85
   SRCPARAM L0000022     0.0000001778      1.83     11.31      0.85
   SRCPARAM L0000023     0.0000001778      1.83     11.31      0.85
   SRCPARAM L0000024     0.0000001778      1.83     11.31      0.85
   SRCPARAM L0000025     0.0000001778      1.83     11.31      0.85
   SRCPARAM L0000026     0.0000001778      1.83     11.31      0.85
   SRCPARAM L0000027     0.0000001778      1.83     11.31      0.85
   SRCPARAM L0000028     0.0000001778      1.83     11.31      0.85
   SRCPARAM L0000029     0.0000001778      1.83     11.31      0.85
   SRCPARAM L0000030     0.0000001778      1.83     11.31      0.85
   SRCPARAM L0000031     0.0000001778      1.83     11.31      0.85
   SRCPARAM L0000032     0.0000001778      1.83     11.31      0.85
   SRCPARAM L0000033     0.0000001778      1.83     11.31      0.85
   SRCPARAM L0000034     0.0000001778      1.83     11.31      0.85
   SRCPARAM L0000035     0.0000001778      1.83     11.31      0.85
   SRCPARAM L0000036     0.0000001778      1.83     11.31      0.85
   SRCPARAM L0000037     0.0000001778      1.83     11.31      0.85
   SRCPARAM L0000038     0.0000001778      1.83     11.31      0.85
   SRCPARAM L0000039     0.0000001778      1.83     11.31      0.85
   SRCPARAM L0000040     0.0000001778      1.83     11.31      0.85
   SRCPARAM L0000041     0.0000001778      1.83     11.31      0.85
   SRCPARAM L0000042     0.0000001778      1.83     11.31      0.85
```

SRCPARAM	L0000043	0.0000001778	1.83	11.31	0.85
SRCPARAM	L0000044	0.0000001778	1.83	11.31	0.85
SRCPARAM	L0000045	0.0000001778	1.83	11.31	0.85
SRCPARAM	L0000046	0.0000001778	1.83	11.31	0.85
SRCPARAM	L0000047	0.0000001778	1.83	11.31	0.85
SRCPARAM	L0000048	0.0000001778	1.83	11.31	0.85
SRCPARAM	L0000049	0.0000001778	1.83	11.31	0.85
SRCPARAM	L0000050	0.0000001778	1.83	11.31	0.85
SRCPARAM	L0000051	0.0000001778	1.83	11.31	0.85
SRCPARAM	L0000052	0.0000001778	1.83	11.31	0.85
SRCPARAM	L0000053	0.0000001778	1.83	11.31	0.85
SRCPARAM	L0000054	0.0000001778	1.83	11.31	0.85
SRCPARAM	L0000055	0.0000001778	1.83	11.31	0.85
SRCPARAM	L0000056	0.0000001778	1.83	11.31	0.85
SRCPARAM	L0000057	0.0000001778	1.83	11.31	0.85
SRCPARAM	L0000058	0.0000001778	1.83	11.31	0.85
SRCPARAM	L0000059	0.0000001778	1.83	11.31	0.85
SRCPARAM	L0000060	0.0000001778	1.83	11.31	0.85
SRCPARAM	L0000061	0.0000001778	1.83	11.31	0.85
SRCPARAM	L0000062	0.0000001778	1.83	11.31	0.85
SRCPARAM	L0000063	0.0000001778	1.83	11.31	0.85
SRCPARAM	L0000064	0.0000001778	1.83	11.31	0.85
SRCPARAM	L0000065	0.0000001778	1.83	11.31	0.85
SRCPARAM	L0000066	0.0000001778	1.83	11.31	0.85
SRCPARAM	L0000067	0.0000001778	1.83	11.31	0.85
SRCPARAM	L0000068	0.0000001778	1.83	11.31	0.85
SRCPARAM	L0000069	0.0000001778	1.83	11.31	0.85
SRCPARAM	L0000070	0.0000001778	1.83	11.31	0.85
SRCPARAM	L0000071	0.0000001778	1.83	11.31	0.85
SRCPARAM	L0000072	0.0000001778	1.83	11.31	0.85
SRCPARAM	L0000073	0.0000001778	1.83	11.31	0.85
SRCPARAM	L0000074	0.0000001778	1.83	11.31	0.85
SRCPARAM	L0000075	0.0000001778	1.83	11.31	0.85
SRCPARAM	L0000076	0.0000001778	1.83	11.31	0.85
SRCPARAM	L0000077	0.0000001778	1.83	11.31	0.85
SRCPARAM	L0000078	0.0000001778	1.83	11.31	0.85
SRCPARAM	L0000079	0.0000001778	1.83	11.31	0.85
SRCPARAM	L0000080	0.0000001778	1.83	11.31	0.85
SRCPARAM	L0000081	0.0000001778	1.83	11.31	0.85
SRCPARAM	L0000082	0.0000001778	1.83	11.31	0.85
SRCPARAM	L0000083	0.0000001778	1.83	11.31	0.85
SRCPARAM	L0000084	0.0000001778	1.83	11.31	0.85
SRCPARAM	L0000085	0.0000001778	1.83	11.31	0.85
SRCPARAM	L0000086	0.0000001778	1.83	11.31	0.85
SRCPARAM	L0000087	0.0000001778	1.83	11.31	0.85
SRCPARAM	L0000088	0.0000001778	1.83	11.31	0.85
SRCPARAM	L0000089	0.0000001778	1.83	11.31	0.85
SRCPARAM	L0000090	0.0000001778	1.83	11.31	0.85
SRCPARAM	L0000091	0.0000001778	1.83	11.31	0.85
SRCPARAM	L0000092	0.0000001778	1.83	11.31	0.85
SRCPARAM	L0000093	0.0000001778	1.83	11.31	0.85
SRCPARAM	L0000094	0.0000001778	1.83	11.31	0.85
SRCPARAM	L0000095	0.0000001778	1.83	11.31	0.85
SRCPARAM	L0000096	0.0000001778	1.83	11.31	0.85
SRCPARAM	L0000097	0.0000001778	1.83	11.31	0.85
SRCPARAM	L0000098	0.0000001778	1.83	11.31	0.85
SRCPARAM	L0000099	0.0000001778	1.83	11.31	0.85
SRCPARAM	L0000100	0.0000001778	1.83	11.31	0.85
SRCPARAM	L0000101	0.0000001778	1.83	11.31	0.85
SRCPARAM	L0000102	0.0000001778	1.83	11.31	0.85
SRCPARAM	L0000103	0.0000001778	1.83	11.31	0.85
SRCPARAM	L0000104	0.0000001778	1.83	11.31	0.85
SRCPARAM	L0000105	0.0000001778	1.83	11.31	0.85
SRCPARAM	L0000106	0.0000001778	1.83	11.31	0.85
SRCPARAM	L0000107	0.0000001778	1.83	11.31	0.85
SRCPARAM	L0000108	0.0000001778	1.83	11.31	0.85
SRCPARAM	L0000109	0.0000001778	1.83	11.31	0.85
SRCPARAM	L0000110	0.0000001778	1.83	11.31	0.85
SRCPARAM	L0000111	0.0000001778	1.83	11.31	0.85
SRCPARAM	L0000112	0.0000001778	1.83	11.31	0.85
SRCPARAM	L0000113	0.0000001778	1.83	11.31	0.85
SRCPARAM	L0000114	0.0000001778	1.83	11.31	0.85
SRCPARAM	L0000115	0.0000001778	1.83	11.31	0.85
SRCPARAM	L0000116	0.0000001778	1.83	11.31	0.85
SRCPARAM	L0000117	0.0000001778	1.83	11.31	0.85
SRCPARAM	L0000118	0.0000001778	1.83	11.31	0.85
SRCPARAM	L0000119	0.0000001778	1.83	11.31	0.85
SRCPARAM	L0000120	0.0000001778	1.83	11.31	0.85
SRCPARAM	L0000121	0.0000001778	1.83	11.31	0.85
SRCPARAM	L0000122	0.0000001778	1.83	11.31	0.85
SRCPARAM	L0000123	0.0000001778	1.83	11.31	0.85

```
   SRCPARAM L0000124     0.0000001778      1.83     11.31      0.85
   SRCPARAM L0000125     0.0000001778      1.83     11.31      0.85
   SRCPARAM L0000126     0.0000001778      1.83     11.31      0.85
   SRCPARAM L0000127     0.0000001778      1.83     11.31      0.85
   SRCPARAM L0000128     0.0000001778      1.83     11.31      0.85
   SRCPARAM L0000129     0.0000001778      1.83     11.31      0.85
   SRCPARAM L0000130     0.0000001778      1.83     11.31      0.85
   SRCPARAM L0000131     0.0000001778      1.83     11.31      0.85
   SRCPARAM L0000132     0.0000001778      1.83     11.31      0.85
   SRCPARAM L0000133     0.0000001778      1.83     11.31      0.85
   SRCPARAM L0000134     0.0000001778      1.83     11.31      0.85
   SRCPARAM L0000135     0.0000001778      1.83     11.31      0.85
   SRCPARAM L0000136     0.0000001778      1.83     11.31      0.85
   SRCPARAM L0000137     0.0000001778      1.83     11.31      0.85
   SRCPARAM L0000138     0.0000001778      1.83     11.31      0.85
** ----------------------------------------------------------------------
   SRCPARAM IDLESHEL      0.004385     3.840   366.000  51.71000     0.100
   SRCPARAM IDLECAL       0.004385     3.840   366.000  51.71000     0.100
   URBANSRC ALL

** Variable Emissions Type: "By Hour-of-Day (HROFDY)"
** Variable Emission Scenario: "Scenario 2"
   EMISFACT L0000001     HROFDY 0.0 0.0 0.0 0.0 0.0 0.0
   EMISFACT L0000001     HROFDY 0.0 1.0 1.0 1.0 1.0 1.0
   EMISFACT L0000001     HROFDY 1.0 1.0 1.0 1.0 1.0 1.0
   EMISFACT L0000001     HROFDY 1.0 0.0 0.0 0.0 0.0 0.0
   EMISFACT L0000002     HROFDY 0.0 0.0 0.0 0.0 0.0 0.0
   EMISFACT L0000002     HROFDY 0.0 1.0 1.0 1.0 1.0 1.0
   EMISFACT L0000002     HROFDY 1.0 1.0 1.0 1.0 1.0 1.0
   EMISFACT L0000002     HROFDY 1.0 0.0 0.0 0.0 0.0 0.0
   EMISFACT L0000003     HROFDY 0.0 0.0 0.0 0.0 0.0 0.0
   EMISFACT L0000003     HROFDY 0.0 1.0 1.0 1.0 1.0 1.0
   EMISFACT L0000003     HROFDY 1.0 1.0 1.0 1.0 1.0 1.0
   EMISFACT L0000003     HROFDY 1.0 0.0 0.0 0.0 0.0 0.0
   EMISFACT L0000004     HROFDY 0.0 0.0 0.0 0.0 0.0 0.0
   EMISFACT L0000004     HROFDY 0.0 1.0 1.0 1.0 1.0 1.0
   EMISFACT L0000004     HROFDY 1.0 1.0 1.0 1.0 1.0 1.0
   EMISFACT L0000004     HROFDY 1.0 0.0 0.0 0.0 0.0 0.0
   EMISFACT L0000005     HROFDY 0.0 0.0 0.0 0.0 0.0 0.0
   EMISFACT L0000005     HROFDY 0.0 1.0 1.0 1.0 1.0 1.0
   EMISFACT L0000005     HROFDY 1.0 1.0 1.0 1.0 1.0 1.0
   EMISFACT L0000005     HROFDY 1.0 0.0 0.0 0.0 0.0 0.0
   EMISFACT L0000006     HROFDY 0.0 0.0 0.0 0.0 0.0 0.0
   EMISFACT L0000006     HROFDY 0.0 1.0 1.0 1.0 1.0 1.0
   EMISFACT L0000006     HROFDY 1.0 1.0 1.0 1.0 1.0 1.0
   EMISFACT L0000006     HROFDY 1.0 0.0 0.0 0.0 0.0 0.0
   EMISFACT L0000007     HROFDY 0.0 0.0 0.0 0.0 0.0 0.0
   EMISFACT L0000007     HROFDY 0.0 1.0 1.0 1.0 1.0 1.0
   EMISFACT L0000007     HROFDY 1.0 1.0 1.0 1.0 1.0 1.0
   EMISFACT L0000007     HROFDY 1.0 0.0 0.0 0.0 0.0 0.0
   EMISFACT L0000008     HROFDY 0.0 0.0 0.0 0.0 0.0 0.0
   EMISFACT L0000008     HROFDY 0.0 1.0 1.0 1.0 1.0 1.0
   EMISFACT L0000008     HROFDY 1.0 1.0 1.0 1.0 1.0 1.0
   EMISFACT L0000008     HROFDY 1.0 0.0 0.0 0.0 0.0 0.0
   EMISFACT L0000009     HROFDY 0.0 0.0 0.0 0.0 0.0 0.0
   EMISFACT L0000009     HROFDY 0.0 1.0 1.0 1.0 1.0 1.0
   EMISFACT L0000009     HROFDY 1.0 1.0 1.0 1.0 1.0 1.0
   EMISFACT L0000009     HROFDY 1.0 0.0 0.0 0.0 0.0 0.0
   EMISFACT L0000010     HROFDY 0.0 0.0 0.0 0.0 0.0 0.0
   EMISFACT L0000010     HROFDY 0.0 1.0 1.0 1.0 1.0 1.0
   EMISFACT L0000010     HROFDY 1.0 1.0 1.0 1.0 1.0 1.0
   EMISFACT L0000010     HROFDY 1.0 0.0 0.0 0.0 0.0 0.0
   EMISFACT L0000011     HROFDY 0.0 0.0 0.0 0.0 0.0 0.0
   EMISFACT L0000011     HROFDY 0.0 1.0 1.0 1.0 1.0 1.0
   EMISFACT L0000011     HROFDY 1.0 1.0 1.0 1.0 1.0 1.0
   EMISFACT L0000011     HROFDY 1.0 0.0 0.0 0.0 0.0 0.0
   EMISFACT L0000012     HROFDY 0.0 0.0 0.0 0.0 0.0 0.0
   EMISFACT L0000012     HROFDY 0.0 1.0 1.0 1.0 1.0 1.0
   EMISFACT L0000012     HROFDY 1.0 1.0 1.0 1.0 1.0 1.0
   EMISFACT L0000012     HROFDY 1.0 0.0 0.0 0.0 0.0 0.0
   EMISFACT L0000013     HROFDY 0.0 0.0 0.0 0.0 0.0 0.0
   EMISFACT L0000013     HROFDY 0.0 1.0 1.0 1.0 1.0 1.0
   EMISFACT L0000013     HROFDY 1.0 1.0 1.0 1.0 1.0 1.0
   EMISFACT L0000013     HROFDY 1.0 0.0 0.0 0.0 0.0 0.0
   EMISFACT L0000014     HROFDY 0.0 0.0 0.0 0.0 0.0 0.0
   EMISFACT L0000014     HROFDY 0.0 1.0 1.0 1.0 1.0 1.0
   EMISFACT L0000014     HROFDY 1.0 1.0 1.0 1.0 1.0 1.0
   EMISFACT L0000014     HROFDY 1.0 0.0 0.0 0.0 0.0 0.0
   EMISFACT L0000015     HROFDY 0.0 0.0 0.0 0.0 0.0 0.0
   EMISFACT L0000015     HROFDY 0.0 1.0 1.0 1.0 1.0 1.0
   EMISFACT L0000015     HROFDY 1.0 1.0 1.0 1.0 1.0 1.0
```

```
EMISFACT L0000015     HROFDY 1.0 0.0 0.0 0.0 0.0 0.0
EMISFACT L0000016     HROFDY 0.0 0.0 0.0 0.0 0.0 0.0
EMISFACT L0000016     HROFDY 0.0 1.0 1.0 1.0 1.0 1.0
EMISFACT L0000016     HROFDY 1.0 1.0 1.0 1.0 1.0 1.0
EMISFACT L0000016     HROFDY 1.0 0.0 0.0 0.0 0.0 0.0
EMISFACT L0000017     HROFDY 0.0 0.0 0.0 0.0 0.0 0.0
EMISFACT L0000017     HROFDY 0.0 1.0 1.0 1.0 1.0 1.0
EMISFACT L0000017     HROFDY 1.0 1.0 1.0 1.0 1.0 1.0
EMISFACT L0000017     HROFDY 1.0 0.0 0.0 0.0 0.0 0.0
EMISFACT L0000018     HROFDY 0.0 0.0 0.0 0.0 0.0 0.0
EMISFACT L0000018     HROFDY 0.0 1.0 1.0 1.0 1.0 1.0
EMISFACT L0000018     HROFDY 1.0 1.0 1.0 1.0 1.0 1.0
EMISFACT L0000018     HROFDY 1.0 0.0 0.0 0.0 0.0 0.0
EMISFACT L0000019     HROFDY 0.0 0.0 0.0 0.0 0.0 0.0
EMISFACT L0000019     HROFDY 0.0 1.0 1.0 1.0 1.0 1.0
EMISFACT L0000019     HROFDY 1.0 1.0 1.0 1.0 1.0 1.0
EMISFACT L0000019     HROFDY 1.0 0.0 0.0 0.0 0.0 0.0
EMISFACT L0000020     HROFDY 0.0 0.0 0.0 0.0 0.0 0.0
EMISFACT L0000020     HROFDY 0.0 1.0 1.0 1.0 1.0 1.0
EMISFACT L0000020     HROFDY 1.0 1.0 1.0 1.0 1.0 1.0
EMISFACT L0000020     HROFDY 1.0 0.0 0.0 0.0 0.0 0.0
EMISFACT L0000021     HROFDY 0.0 0.0 0.0 0.0 0.0 0.0
EMISFACT L0000021     HROFDY 0.0 1.0 1.0 1.0 1.0 1.0
EMISFACT L0000021     HROFDY 1.0 1.0 1.0 1.0 1.0 1.0
EMISFACT L0000021     HROFDY 1.0 0.0 0.0 0.0 0.0 0.0
EMISFACT L0000022     HROFDY 0.0 0.0 0.0 0.0 0.0 0.0
EMISFACT L0000022     HROFDY 0.0 1.0 1.0 1.0 1.0 1.0
EMISFACT L0000022     HROFDY 1.0 1.0 1.0 1.0 1.0 1.0
EMISFACT L0000022     HROFDY 1.0 0.0 0.0 0.0 0.0 0.0
EMISFACT L0000023     HROFDY 0.0 0.0 0.0 0.0 0.0 0.0
EMISFACT L0000023     HROFDY 0.0 1.0 1.0 1.0 1.0 1.0
EMISFACT L0000023     HROFDY 1.0 1.0 1.0 1.0 1.0 1.0
EMISFACT L0000023     HROFDY 1.0 0.0 0.0 0.0 0.0 0.0
EMISFACT L0000024     HROFDY 0.0 0.0 0.0 0.0 0.0 0.0
EMISFACT L0000024     HROFDY 0.0 1.0 1.0 1.0 1.0 1.0
EMISFACT L0000024     HROFDY 1.0 1.0 1.0 1.0 1.0 1.0
EMISFACT L0000024     HROFDY 1.0 0.0 0.0 0.0 0.0 0.0
EMISFACT L0000025     HROFDY 0.0 0.0 0.0 0.0 0.0 0.0
EMISFACT L0000025     HROFDY 0.0 1.0 1.0 1.0 1.0 1.0
EMISFACT L0000025     HROFDY 1.0 1.0 1.0 1.0 1.0 1.0
EMISFACT L0000025     HROFDY 1.0 0.0 0.0 0.0 0.0 0.0
EMISFACT L0000026     HROFDY 0.0 0.0 0.0 0.0 0.0 0.0
EMISFACT L0000026     HROFDY 0.0 1.0 1.0 1.0 1.0 1.0
EMISFACT L0000026     HROFDY 1.0 1.0 1.0 1.0 1.0 1.0
EMISFACT L0000026     HROFDY 1.0 0.0 0.0 0.0 0.0 0.0
EMISFACT L0000027     HROFDY 0.0 0.0 0.0 0.0 0.0 0.0
EMISFACT L0000027     HROFDY 0.0 1.0 1.0 1.0 1.0 1.0
EMISFACT L0000027     HROFDY 1.0 1.0 1.0 1.0 1.0 1.0
EMISFACT L0000027     HROFDY 1.0 0.0 0.0 0.0 0.0 0.0
EMISFACT L0000028     HROFDY 0.0 0.0 0.0 0.0 0.0 0.0
EMISFACT L0000028     HROFDY 0.0 1.0 1.0 1.0 1.0 1.0
EMISFACT L0000028     HROFDY 1.0 1.0 1.0 1.0 1.0 1.0
EMISFACT L0000028     HROFDY 1.0 0.0 0.0 0.0 0.0 0.0
EMISFACT L0000029     HROFDY 0.0 0.0 0.0 0.0 0.0 0.0
EMISFACT L0000029     HROFDY 0.0 1.0 1.0 1.0 1.0 1.0
EMISFACT L0000029     HROFDY 1.0 1.0 1.0 1.0 1.0 1.0
EMISFACT L0000029     HROFDY 1.0 0.0 0.0 0.0 0.0 0.0
EMISFACT L0000030     HROFDY 0.0 0.0 0.0 0.0 0.0 0.0
EMISFACT L0000030     HROFDY 0.0 1.0 1.0 1.0 1.0 1.0
EMISFACT L0000030     HROFDY 1.0 1.0 1.0 1.0 1.0 1.0
EMISFACT L0000030     HROFDY 1.0 0.0 0.0 0.0 0.0 0.0
EMISFACT L0000031     HROFDY 0.0 0.0 0.0 0.0 0.0 0.0
EMISFACT L0000031     HROFDY 0.0 1.0 1.0 1.0 1.0 1.0
EMISFACT L0000031     HROFDY 1.0 1.0 1.0 1.0 1.0 1.0
EMISFACT L0000031     HROFDY 1.0 0.0 0.0 0.0 0.0 0.0
EMISFACT L0000032     HROFDY 0.0 0.0 0.0 0.0 0.0 0.0
EMISFACT L0000032     HROFDY 0.0 1.0 1.0 1.0 1.0 1.0
EMISFACT L0000032     HROFDY 1.0 1.0 1.0 1.0 1.0 1.0
EMISFACT L0000032     HROFDY 1.0 0.0 0.0 0.0 0.0 0.0
EMISFACT L0000033     HROFDY 0.0 0.0 0.0 0.0 0.0 0.0
EMISFACT L0000033     HROFDY 0.0 1.0 1.0 1.0 1.0 1.0
EMISFACT L0000033     HROFDY 1.0 1.0 1.0 1.0 1.0 1.0
EMISFACT L0000033     HROFDY 1.0 0.0 0.0 0.0 0.0 0.0
EMISFACT L0000034     HROFDY 0.0 0.0 0.0 0.0 0.0 0.0
EMISFACT L0000034     HROFDY 0.0 1.0 1.0 1.0 1.0 1.0
EMISFACT L0000034     HROFDY 1.0 1.0 1.0 1.0 1.0 1.0
EMISFACT L0000034     HROFDY 1.0 0.0 0.0 0.0 0.0 0.0
EMISFACT L0000035     HROFDY 0.0 0.0 0.0 0.0 0.0 0.0
EMISFACT L0000035     HROFDY 0.0 1.0 1.0 1.0 1.0 1.0
EMISFACT L0000035     HROFDY 1.0 1.0 1.0 1.0 1.0 1.0
EMISFACT L0000035     HROFDY 1.0 0.0 0.0 0.0 0.0 0.0
```

```
EMISFACT L0000036     HROFDY 0.0 0.0 0.0 0.0 0.0 0.0
EMISFACT L0000036     HROFDY 0.0 1.0 1.0 1.0 1.0 1.0
EMISFACT L0000036     HROFDY 1.0 1.0 1.0 1.0 1.0 1.0
EMISFACT L0000036     HROFDY 1.0 0.0 0.0 0.0 0.0 0.0
EMISFACT L0000037     HROFDY 0.0 0.0 0.0 0.0 0.0 0.0
EMISFACT L0000037     HROFDY 0.0 1.0 1.0 1.0 1.0 1.0
EMISFACT L0000037     HROFDY 1.0 1.0 1.0 1.0 1.0 1.0
EMISFACT L0000037     HROFDY 1.0 0.0 0.0 0.0 0.0 0.0
EMISFACT L0000038     HROFDY 0.0 0.0 0.0 0.0 0.0 0.0
EMISFACT L0000038     HROFDY 0.0 1.0 1.0 1.0 1.0 1.0
EMISFACT L0000038     HROFDY 1.0 1.0 1.0 1.0 1.0 1.0
EMISFACT L0000038     HROFDY 1.0 0.0 0.0 0.0 0.0 0.0
EMISFACT L0000039     HROFDY 0.0 0.0 0.0 0.0 0.0 0.0
EMISFACT L0000039     HROFDY 0.0 1.0 1.0 1.0 1.0 1.0
EMISFACT L0000039     HROFDY 1.0 1.0 1.0 1.0 1.0 1.0
EMISFACT L0000039     HROFDY 1.0 0.0 0.0 0.0 0.0 0.0
EMISFACT L0000040     HROFDY 0.0 0.0 0.0 0.0 0.0 0.0
EMISFACT L0000040     HROFDY 0.0 1.0 1.0 1.0 1.0 1.0
EMISFACT L0000040     HROFDY 1.0 1.0 1.0 1.0 1.0 1.0
EMISFACT L0000040     HROFDY 1.0 0.0 0.0 0.0 0.0 0.0
EMISFACT L0000041     HROFDY 0.0 0.0 0.0 0.0 0.0 0.0
EMISFACT L0000041     HROFDY 0.0 1.0 1.0 1.0 1.0 1.0
EMISFACT L0000041     HROFDY 1.0 1.0 1.0 1.0 1.0 1.0
EMISFACT L0000041     HROFDY 1.0 0.0 0.0 0.0 0.0 0.0
EMISFACT L0000042     HROFDY 0.0 0.0 0.0 0.0 0.0 0.0
EMISFACT L0000042     HROFDY 0.0 1.0 1.0 1.0 1.0 1.0
EMISFACT L0000042     HROFDY 1.0 1.0 1.0 1.0 1.0 1.0
EMISFACT L0000042     HROFDY 1.0 0.0 0.0 0.0 0.0 0.0
EMISFACT L0000043     HROFDY 0.0 0.0 0.0 0.0 0.0 0.0
EMISFACT L0000043     HROFDY 0.0 1.0 1.0 1.0 1.0 1.0
EMISFACT L0000043     HROFDY 1.0 1.0 1.0 1.0 1.0 1.0
EMISFACT L0000043     HROFDY 1.0 0.0 0.0 0.0 0.0 0.0
EMISFACT L0000044     HROFDY 0.0 0.0 0.0 0.0 0.0 0.0
EMISFACT L0000044     HROFDY 0.0 1.0 1.0 1.0 1.0 1.0
EMISFACT L0000044     HROFDY 1.0 1.0 1.0 1.0 1.0 1.0
EMISFACT L0000044     HROFDY 1.0 0.0 0.0 0.0 0.0 0.0
EMISFACT L0000045     HROFDY 0.0 0.0 0.0 0.0 0.0 0.0
EMISFACT L0000045     HROFDY 0.0 1.0 1.0 1.0 1.0 1.0
EMISFACT L0000045     HROFDY 1.0 1.0 1.0 1.0 1.0 1.0
EMISFACT L0000045     HROFDY 1.0 0.0 0.0 0.0 0.0 0.0
EMISFACT L0000046     HROFDY 0.0 0.0 0.0 0.0 0.0 0.0
EMISFACT L0000046     HROFDY 0.0 1.0 1.0 1.0 1.0 1.0
EMISFACT L0000046     HROFDY 1.0 1.0 1.0 1.0 1.0 1.0
EMISFACT L0000046     HROFDY 1.0 0.0 0.0 0.0 0.0 0.0
EMISFACT L0000047     HROFDY 0.0 0.0 0.0 0.0 0.0 0.0
EMISFACT L0000047     HROFDY 0.0 1.0 1.0 1.0 1.0 1.0
EMISFACT L0000047     HROFDY 1.0 1.0 1.0 1.0 1.0 1.0
EMISFACT L0000047     HROFDY 1.0 0.0 0.0 0.0 0.0 0.0
EMISFACT L0000048     HROFDY 0.0 0.0 0.0 0.0 0.0 0.0
EMISFACT L0000048     HROFDY 0.0 1.0 1.0 1.0 1.0 1.0
EMISFACT L0000048     HROFDY 1.0 1.0 1.0 1.0 1.0 1.0
EMISFACT L0000048     HROFDY 1.0 0.0 0.0 0.0 0.0 0.0
EMISFACT L0000049     HROFDY 0.0 0.0 0.0 0.0 0.0 0.0
EMISFACT L0000049     HROFDY 0.0 1.0 1.0 1.0 1.0 1.0
EMISFACT L0000049     HROFDY 1.0 1.0 1.0 1.0 1.0 1.0
EMISFACT L0000049     HROFDY 1.0 0.0 0.0 0.0 0.0 0.0
EMISFACT L0000050     HROFDY 0.0 0.0 0.0 0.0 0.0 0.0
EMISFACT L0000050     HROFDY 0.0 1.0 1.0 1.0 1.0 1.0
EMISFACT L0000050     HROFDY 1.0 1.0 1.0 1.0 1.0 1.0
EMISFACT L0000050     HROFDY 1.0 0.0 0.0 0.0 0.0 0.0
EMISFACT L0000051     HROFDY 0.0 0.0 0.0 0.0 0.0 0.0
EMISFACT L0000051     HROFDY 0.0 1.0 1.0 1.0 1.0 1.0
EMISFACT L0000051     HROFDY 1.0 1.0 1.0 1.0 1.0 1.0
EMISFACT L0000051     HROFDY 1.0 0.0 0.0 0.0 0.0 0.0
EMISFACT L0000052     HROFDY 0.0 0.0 0.0 0.0 0.0 0.0
EMISFACT L0000052     HROFDY 0.0 1.0 1.0 1.0 1.0 1.0
EMISFACT L0000052     HROFDY 1.0 1.0 1.0 1.0 1.0 1.0
EMISFACT L0000052     HROFDY 1.0 0.0 0.0 0.0 0.0 0.0
EMISFACT L0000053     HROFDY 0.0 0.0 0.0 0.0 0.0 0.0
EMISFACT L0000053     HROFDY 0.0 1.0 1.0 1.0 1.0 1.0
EMISFACT L0000053     HROFDY 1.0 1.0 1.0 1.0 1.0 1.0
EMISFACT L0000053     HROFDY 1.0 0.0 0.0 0.0 0.0 0.0
EMISFACT L0000054     HROFDY 0.0 0.0 0.0 0.0 0.0 0.0
EMISFACT L0000054     HROFDY 0.0 1.0 1.0 1.0 1.0 1.0
EMISFACT L0000054     HROFDY 1.0 1.0 1.0 1.0 1.0 1.0
EMISFACT L0000054     HROFDY 1.0 0.0 0.0 0.0 0.0 0.0
EMISFACT L0000055     HROFDY 0.0 0.0 0.0 0.0 0.0 0.0
EMISFACT L0000055     HROFDY 0.0 1.0 1.0 1.0 1.0 1.0
EMISFACT L0000055     HROFDY 1.0 1.0 1.0 1.0 1.0 1.0
EMISFACT L0000055     HROFDY 1.0 0.0 0.0 0.0 0.0 0.0
EMISFACT L0000056     HROFDY 0.0 0.0 0.0 0.0 0.0 0.0
```

```
EMISFACT L0000056     HROFDY 0.0 1.0 1.0 1.0 1.0 1.0
EMISFACT L0000056     HROFDY 1.0 1.0 1.0 1.0 1.0 1.0
EMISFACT L0000056     HROFDY 1.0 0.0 0.0 0.0 0.0 0.0
EMISFACT L0000057     HROFDY 0.0 0.0 0.0 0.0 0.0 0.0
EMISFACT L0000057     HROFDY 0.0 1.0 1.0 1.0 1.0 1.0
EMISFACT L0000057     HROFDY 1.0 1.0 1.0 1.0 1.0 1.0
EMISFACT L0000057     HROFDY 1.0 0.0 0.0 0.0 0.0 0.0
EMISFACT L0000058     HROFDY 0.0 0.0 0.0 0.0 0.0 0.0
EMISFACT L0000058     HROFDY 0.0 1.0 1.0 1.0 1.0 1.0
EMISFACT L0000058     HROFDY 1.0 1.0 1.0 1.0 1.0 1.0
EMISFACT L0000058     HROFDY 1.0 0.0 0.0 0.0 0.0 0.0
EMISFACT L0000059     HROFDY 0.0 0.0 0.0 0.0 0.0 0.0
EMISFACT L0000059     HROFDY 0.0 1.0 1.0 1.0 1.0 1.0
EMISFACT L0000059     HROFDY 1.0 1.0 1.0 1.0 1.0 1.0
EMISFACT L0000059     HROFDY 1.0 0.0 0.0 0.0 0.0 0.0
EMISFACT L0000060     HROFDY 0.0 0.0 0.0 0.0 0.0 0.0
EMISFACT L0000060     HROFDY 0.0 1.0 1.0 1.0 1.0 1.0
EMISFACT L0000060     HROFDY 1.0 1.0 1.0 1.0 1.0 1.0
EMISFACT L0000060     HROFDY 1.0 0.0 0.0 0.0 0.0 0.0
EMISFACT L0000061     HROFDY 0.0 0.0 0.0 0.0 0.0 0.0
EMISFACT L0000061     HROFDY 0.0 1.0 1.0 1.0 1.0 1.0
EMISFACT L0000061     HROFDY 1.0 1.0 1.0 1.0 1.0 1.0
EMISFACT L0000061     HROFDY 1.0 0.0 0.0 0.0 0.0 0.0
EMISFACT L0000062     HROFDY 0.0 0.0 0.0 0.0 0.0 0.0
EMISFACT L0000062     HROFDY 0.0 1.0 1.0 1.0 1.0 1.0
EMISFACT L0000062     HROFDY 1.0 1.0 1.0 1.0 1.0 1.0
EMISFACT L0000062     HROFDY 1.0 0.0 0.0 0.0 0.0 0.0
EMISFACT L0000063     HROFDY 0.0 0.0 0.0 0.0 0.0 0.0
EMISFACT L0000063     HROFDY 0.0 1.0 1.0 1.0 1.0 1.0
EMISFACT L0000063     HROFDY 1.0 1.0 1.0 1.0 1.0 1.0
EMISFACT L0000063     HROFDY 1.0 0.0 0.0 0.0 0.0 0.0
EMISFACT L0000064     HROFDY 0.0 0.0 0.0 0.0 0.0 0.0
EMISFACT L0000064     HROFDY 0.0 1.0 1.0 1.0 1.0 1.0
EMISFACT L0000064     HROFDY 1.0 1.0 1.0 1.0 1.0 1.0
EMISFACT L0000064     HROFDY 1.0 0.0 0.0 0.0 0.0 0.0
EMISFACT L0000065     HROFDY 0.0 0.0 0.0 0.0 0.0 0.0
EMISFACT L0000065     HROFDY 0.0 1.0 1.0 1.0 1.0 1.0
EMISFACT L0000065     HROFDY 1.0 1.0 1.0 1.0 1.0 1.0
EMISFACT L0000065     HROFDY 1.0 0.0 0.0 0.0 0.0 0.0
EMISFACT L0000066     HROFDY 0.0 0.0 0.0 0.0 0.0 0.0
EMISFACT L0000066     HROFDY 0.0 1.0 1.0 1.0 1.0 1.0
EMISFACT L0000066     HROFDY 1.0 1.0 1.0 1.0 1.0 1.0
EMISFACT L0000066     HROFDY 1.0 0.0 0.0 0.0 0.0 0.0
EMISFACT L0000067     HROFDY 0.0 0.0 0.0 0.0 0.0 0.0
EMISFACT L0000067     HROFDY 0.0 1.0 1.0 1.0 1.0 1.0
EMISFACT L0000067     HROFDY 1.0 1.0 1.0 1.0 1.0 1.0
EMISFACT L0000067     HROFDY 1.0 0.0 0.0 0.0 0.0 0.0
EMISFACT L0000068     HROFDY 0.0 0.0 0.0 0.0 0.0 0.0
EMISFACT L0000068     HROFDY 0.0 1.0 1.0 1.0 1.0 1.0
EMISFACT L0000068     HROFDY 1.0 1.0 1.0 1.0 1.0 1.0
EMISFACT L0000068     HROFDY 1.0 0.0 0.0 0.0 0.0 0.0
EMISFACT L0000069     HROFDY 0.0 0.0 0.0 0.0 0.0 0.0
EMISFACT L0000069     HROFDY 0.0 1.0 1.0 1.0 1.0 1.0
EMISFACT L0000069     HROFDY 1.0 1.0 1.0 1.0 1.0 1.0
EMISFACT L0000069     HROFDY 1.0 0.0 0.0 0.0 0.0 0.0
EMISFACT L0000070     HROFDY 0.0 0.0 0.0 0.0 0.0 0.0
EMISFACT L0000070     HROFDY 0.0 1.0 1.0 1.0 1.0 1.0
EMISFACT L0000070     HROFDY 1.0 1.0 1.0 1.0 1.0 1.0
EMISFACT L0000070     HROFDY 1.0 0.0 0.0 0.0 0.0 0.0
EMISFACT L0000071     HROFDY 0.0 0.0 0.0 0.0 0.0 0.0
EMISFACT L0000071     HROFDY 0.0 1.0 1.0 1.0 1.0 1.0
EMISFACT L0000071     HROFDY 1.0 1.0 1.0 1.0 1.0 1.0
EMISFACT L0000071     HROFDY 1.0 0.0 0.0 0.0 0.0 0.0
EMISFACT L0000072     HROFDY 0.0 0.0 0.0 0.0 0.0 0.0
EMISFACT L0000072     HROFDY 0.0 1.0 1.0 1.0 1.0 1.0
EMISFACT L0000072     HROFDY 1.0 1.0 1.0 1.0 1.0 1.0
EMISFACT L0000072     HROFDY 1.0 0.0 0.0 0.0 0.0 0.0
EMISFACT L0000073     HROFDY 0.0 0.0 0.0 0.0 0.0 0.0
EMISFACT L0000073     HROFDY 0.0 1.0 1.0 1.0 1.0 1.0
EMISFACT L0000073     HROFDY 1.0 1.0 1.0 1.0 1.0 1.0
EMISFACT L0000073     HROFDY 1.0 0.0 0.0 0.0 0.0 0.0
EMISFACT L0000074     HROFDY 0.0 0.0 0.0 0.0 0.0 0.0
EMISFACT L0000074     HROFDY 0.0 1.0 1.0 1.0 1.0 1.0
EMISFACT L0000074     HROFDY 1.0 1.0 1.0 1.0 1.0 1.0
EMISFACT L0000074     HROFDY 1.0 0.0 0.0 0.0 0.0 0.0
EMISFACT L0000075     HROFDY 0.0 0.0 0.0 0.0 0.0 0.0
EMISFACT L0000075     HROFDY 0.0 1.0 1.0 1.0 1.0 1.0
EMISFACT L0000075     HROFDY 1.0 1.0 1.0 1.0 1.0 1.0
EMISFACT L0000075     HROFDY 1.0 0.0 0.0 0.0 0.0 0.0
EMISFACT L0000076     HROFDY 0.0 0.0 0.0 0.0 0.0 0.0
EMISFACT L0000076     HROFDY 0.0 1.0 1.0 1.0 1.0 1.0
```

```
EMISFACT L0000076     HROFDY 1.0 1.0 1.0 1.0 1.0 1.0
EMISFACT L0000076     HROFDY 1.0 0.0 0.0 0.0 0.0 0.0
EMISFACT L0000077     HROFDY 0.0 0.0 0.0 0.0 0.0 0.0
EMISFACT L0000077     HROFDY 0.0 1.0 1.0 1.0 1.0 1.0
EMISFACT L0000077     HROFDY 1.0 1.0 1.0 1.0 1.0 1.0
EMISFACT L0000077     HROFDY 1.0 0.0 0.0 0.0 0.0 0.0
EMISFACT L0000078     HROFDY 0.0 0.0 0.0 0.0 0.0 0.0
EMISFACT L0000078     HROFDY 0.0 1.0 1.0 1.0 1.0 1.0
EMISFACT L0000078     HROFDY 1.0 1.0 1.0 1.0 1.0 1.0
EMISFACT L0000078     HROFDY 1.0 0.0 0.0 0.0 0.0 0.0
EMISFACT L0000079     HROFDY 0.0 0.0 0.0 0.0 0.0 0.0
EMISFACT L0000079     HROFDY 0.0 1.0 1.0 1.0 1.0 1.0
EMISFACT L0000079     HROFDY 1.0 1.0 1.0 1.0 1.0 1.0
EMISFACT L0000079     HROFDY 1.0 0.0 0.0 0.0 0.0 0.0
EMISFACT L0000080     HROFDY 0.0 0.0 0.0 0.0 0.0 0.0
EMISFACT L0000080     HROFDY 0.0 1.0 1.0 1.0 1.0 1.0
EMISFACT L0000080     HROFDY 1.0 1.0 1.0 1.0 1.0 1.0
EMISFACT L0000080     HROFDY 1.0 0.0 0.0 0.0 0.0 0.0
EMISFACT L0000081     HROFDY 0.0 0.0 0.0 0.0 0.0 0.0
EMISFACT L0000081     HROFDY 0.0 1.0 1.0 1.0 1.0 1.0
EMISFACT L0000081     HROFDY 1.0 1.0 1.0 1.0 1.0 1.0
EMISFACT L0000081     HROFDY 1.0 0.0 0.0 0.0 0.0 0.0
EMISFACT L0000082     HROFDY 0.0 0.0 0.0 0.0 0.0 0.0
EMISFACT L0000082     HROFDY 0.0 1.0 1.0 1.0 1.0 1.0
EMISFACT L0000082     HROFDY 1.0 1.0 1.0 1.0 1.0 1.0
EMISFACT L0000082     HROFDY 1.0 0.0 0.0 0.0 0.0 0.0
EMISFACT L0000083     HROFDY 0.0 0.0 0.0 0.0 0.0 0.0
EMISFACT L0000083     HROFDY 0.0 1.0 1.0 1.0 1.0 1.0
EMISFACT L0000083     HROFDY 1.0 1.0 1.0 1.0 1.0 1.0
EMISFACT L0000083     HROFDY 1.0 0.0 0.0 0.0 0.0 0.0
EMISFACT L0000084     HROFDY 0.0 0.0 0.0 0.0 0.0 0.0
EMISFACT L0000084     HROFDY 0.0 1.0 1.0 1.0 1.0 1.0
EMISFACT L0000084     HROFDY 1.0 1.0 1.0 1.0 1.0 1.0
EMISFACT L0000084     HROFDY 1.0 0.0 0.0 0.0 0.0 0.0
EMISFACT L0000085     HROFDY 0.0 0.0 0.0 0.0 0.0 0.0
EMISFACT L0000085     HROFDY 0.0 1.0 1.0 1.0 1.0 1.0
EMISFACT L0000085     HROFDY 1.0 1.0 1.0 1.0 1.0 1.0
EMISFACT L0000085     HROFDY 1.0 0.0 0.0 0.0 0.0 0.0
EMISFACT L0000086     HROFDY 0.0 0.0 0.0 0.0 0.0 0.0
EMISFACT L0000086     HROFDY 0.0 1.0 1.0 1.0 1.0 1.0
EMISFACT L0000086     HROFDY 1.0 1.0 1.0 1.0 1.0 1.0
EMISFACT L0000086     HROFDY 1.0 0.0 0.0 0.0 0.0 0.0
EMISFACT L0000087     HROFDY 0.0 0.0 0.0 0.0 0.0 0.0
EMISFACT L0000087     HROFDY 0.0 1.0 1.0 1.0 1.0 1.0
EMISFACT L0000087     HROFDY 1.0 1.0 1.0 1.0 1.0 1.0
EMISFACT L0000087     HROFDY 1.0 0.0 0.0 0.0 0.0 0.0
EMISFACT L0000088     HROFDY 0.0 0.0 0.0 0.0 0.0 0.0
EMISFACT L0000088     HROFDY 0.0 1.0 1.0 1.0 1.0 1.0
EMISFACT L0000088     HROFDY 1.0 1.0 1.0 1.0 1.0 1.0
EMISFACT L0000088     HROFDY 1.0 0.0 0.0 0.0 0.0 0.0
EMISFACT L0000089     HROFDY 0.0 0.0 0.0 0.0 0.0 0.0
EMISFACT L0000089     HROFDY 0.0 1.0 1.0 1.0 1.0 1.0
EMISFACT L0000089     HROFDY 1.0 1.0 1.0 1.0 1.0 1.0
EMISFACT L0000089     HROFDY 1.0 0.0 0.0 0.0 0.0 0.0
EMISFACT L0000090     HROFDY 0.0 0.0 0.0 0.0 0.0 0.0
EMISFACT L0000090     HROFDY 0.0 1.0 1.0 1.0 1.0 1.0
EMISFACT L0000090     HROFDY 1.0 1.0 1.0 1.0 1.0 1.0
EMISFACT L0000090     HROFDY 1.0 0.0 0.0 0.0 0.0 0.0
EMISFACT L0000091     HROFDY 0.0 0.0 0.0 0.0 0.0 0.0
EMISFACT L0000091     HROFDY 0.0 1.0 1.0 1.0 1.0 1.0
EMISFACT L0000091     HROFDY 1.0 1.0 1.0 1.0 1.0 1.0
EMISFACT L0000091     HROFDY 1.0 0.0 0.0 0.0 0.0 0.0
EMISFACT L0000092     HROFDY 0.0 0.0 0.0 0.0 0.0 0.0
EMISFACT L0000092     HROFDY 0.0 1.0 1.0 1.0 1.0 1.0
EMISFACT L0000092     HROFDY 1.0 1.0 1.0 1.0 1.0 1.0
EMISFACT L0000092     HROFDY 1.0 0.0 0.0 0.0 0.0 0.0
EMISFACT L0000093     HROFDY 0.0 0.0 0.0 0.0 0.0 0.0
EMISFACT L0000093     HROFDY 0.0 1.0 1.0 1.0 1.0 1.0
EMISFACT L0000093     HROFDY 1.0 1.0 1.0 1.0 1.0 1.0
EMISFACT L0000093     HROFDY 1.0 0.0 0.0 0.0 0.0 0.0
EMISFACT L0000094     HROFDY 0.0 0.0 0.0 0.0 0.0 0.0
EMISFACT L0000094     HROFDY 0.0 1.0 1.0 1.0 1.0 1.0
EMISFACT L0000094     HROFDY 1.0 1.0 1.0 1.0 1.0 1.0
EMISFACT L0000094     HROFDY 1.0 0.0 0.0 0.0 0.0 0.0
EMISFACT L0000095     HROFDY 0.0 0.0 0.0 0.0 0.0 0.0
EMISFACT L0000095     HROFDY 0.0 1.0 1.0 1.0 1.0 1.0
EMISFACT L0000095     HROFDY 1.0 1.0 1.0 1.0 1.0 1.0
EMISFACT L0000095     HROFDY 1.0 0.0 0.0 0.0 0.0 0.0
EMISFACT L0000096     HROFDY 0.0 0.0 0.0 0.0 0.0 0.0
EMISFACT L0000096     HROFDY 0.0 1.0 1.0 1.0 1.0 1.0
EMISFACT L0000096     HROFDY 1.0 1.0 1.0 1.0 1.0 1.0
```

```
EMISFACT L0000096     HROFDY 1.0 0.0 0.0 0.0 0.0 0.0
EMISFACT L0000097     HROFDY 0.0 0.0 0.0 0.0 0.0 0.0
EMISFACT L0000097     HROFDY 0.0 1.0 1.0 1.0 1.0 1.0
EMISFACT L0000097     HROFDY 1.0 1.0 1.0 1.0 1.0 1.0
EMISFACT L0000097     HROFDY 1.0 0.0 0.0 0.0 0.0 0.0
EMISFACT L0000098     HROFDY 0.0 0.0 0.0 0.0 0.0 0.0
EMISFACT L0000098     HROFDY 0.0 1.0 1.0 1.0 1.0 1.0
EMISFACT L0000098     HROFDY 1.0 1.0 1.0 1.0 1.0 1.0
EMISFACT L0000098     HROFDY 1.0 0.0 0.0 0.0 0.0 0.0
EMISFACT L0000099     HROFDY 0.0 0.0 0.0 0.0 0.0 0.0
EMISFACT L0000099     HROFDY 0.0 1.0 1.0 1.0 1.0 1.0
EMISFACT L0000099     HROFDY 1.0 1.0 1.0 1.0 1.0 1.0
EMISFACT L0000099     HROFDY 1.0 0.0 0.0 0.0 0.0 0.0
EMISFACT L0000100     HROFDY 0.0 0.0 0.0 0.0 0.0 0.0
EMISFACT L0000100     HROFDY 0.0 1.0 1.0 1.0 1.0 1.0
EMISFACT L0000100     HROFDY 1.0 1.0 1.0 1.0 1.0 1.0
EMISFACT L0000100     HROFDY 1.0 0.0 0.0 0.0 0.0 0.0
EMISFACT L0000101     HROFDY 0.0 0.0 0.0 0.0 0.0 0.0
EMISFACT L0000101     HROFDY 0.0 1.0 1.0 1.0 1.0 1.0
EMISFACT L0000101     HROFDY 1.0 1.0 1.0 1.0 1.0 1.0
EMISFACT L0000101     HROFDY 1.0 0.0 0.0 0.0 0.0 0.0
EMISFACT L0000102     HROFDY 0.0 0.0 0.0 0.0 0.0 0.0
EMISFACT L0000102     HROFDY 0.0 1.0 1.0 1.0 1.0 1.0
EMISFACT L0000102     HROFDY 1.0 1.0 1.0 1.0 1.0 1.0
EMISFACT L0000102     HROFDY 1.0 0.0 0.0 0.0 0.0 0.0
EMISFACT L0000103     HROFDY 0.0 0.0 0.0 0.0 0.0 0.0
EMISFACT L0000103     HROFDY 0.0 1.0 1.0 1.0 1.0 1.0
EMISFACT L0000103     HROFDY 1.0 1.0 1.0 1.0 1.0 1.0
EMISFACT L0000103     HROFDY 1.0 0.0 0.0 0.0 0.0 0.0
EMISFACT L0000104     HROFDY 0.0 0.0 0.0 0.0 0.0 0.0
EMISFACT L0000104     HROFDY 0.0 1.0 1.0 1.0 1.0 1.0
EMISFACT L0000104     HROFDY 1.0 1.0 1.0 1.0 1.0 1.0
EMISFACT L0000104     HROFDY 1.0 0.0 0.0 0.0 0.0 0.0
EMISFACT L0000105     HROFDY 0.0 0.0 0.0 0.0 0.0 0.0
EMISFACT L0000105     HROFDY 0.0 1.0 1.0 1.0 1.0 1.0
EMISFACT L0000105     HROFDY 1.0 1.0 1.0 1.0 1.0 1.0
EMISFACT L0000105     HROFDY 1.0 0.0 0.0 0.0 0.0 0.0
EMISFACT L0000106     HROFDY 0.0 0.0 0.0 0.0 0.0 0.0
EMISFACT L0000106     HROFDY 0.0 1.0 1.0 1.0 1.0 1.0
EMISFACT L0000106     HROFDY 1.0 1.0 1.0 1.0 1.0 1.0
EMISFACT L0000106     HROFDY 1.0 0.0 0.0 0.0 0.0 0.0
EMISFACT L0000107     HROFDY 0.0 0.0 0.0 0.0 0.0 0.0
EMISFACT L0000107     HROFDY 0.0 1.0 1.0 1.0 1.0 1.0
EMISFACT L0000107     HROFDY 1.0 1.0 1.0 1.0 1.0 1.0
EMISFACT L0000107     HROFDY 1.0 0.0 0.0 0.0 0.0 0.0
EMISFACT L0000108     HROFDY 0.0 0.0 0.0 0.0 0.0 0.0
EMISFACT L0000108     HROFDY 0.0 1.0 1.0 1.0 1.0 1.0
EMISFACT L0000108     HROFDY 1.0 1.0 1.0 1.0 1.0 1.0
EMISFACT L0000108     HROFDY 1.0 0.0 0.0 0.0 0.0 0.0
EMISFACT L0000109     HROFDY 0.0 0.0 0.0 0.0 0.0 0.0
EMISFACT L0000109     HROFDY 0.0 1.0 1.0 1.0 1.0 1.0
EMISFACT L0000109     HROFDY 1.0 1.0 1.0 1.0 1.0 1.0
EMISFACT L0000109     HROFDY 1.0 0.0 0.0 0.0 0.0 0.0
EMISFACT L0000110     HROFDY 0.0 0.0 0.0 0.0 0.0 0.0
EMISFACT L0000110     HROFDY 0.0 1.0 1.0 1.0 1.0 1.0
EMISFACT L0000110     HROFDY 1.0 1.0 1.0 1.0 1.0 1.0
EMISFACT L0000110     HROFDY 1.0 0.0 0.0 0.0 0.0 0.0
EMISFACT L0000111     HROFDY 0.0 0.0 0.0 0.0 0.0 0.0
EMISFACT L0000111     HROFDY 0.0 1.0 1.0 1.0 1.0 1.0
EMISFACT L0000111     HROFDY 1.0 1.0 1.0 1.0 1.0 1.0
EMISFACT L0000111     HROFDY 1.0 0.0 0.0 0.0 0.0 0.0
EMISFACT L0000112     HROFDY 0.0 0.0 0.0 0.0 0.0 0.0
EMISFACT L0000112     HROFDY 0.0 1.0 1.0 1.0 1.0 1.0
EMISFACT L0000112     HROFDY 1.0 1.0 1.0 1.0 1.0 1.0
EMISFACT L0000112     HROFDY 1.0 0.0 0.0 0.0 0.0 0.0
EMISFACT L0000113     HROFDY 0.0 0.0 0.0 0.0 0.0 0.0
EMISFACT L0000113     HROFDY 0.0 1.0 1.0 1.0 1.0 1.0
EMISFACT L0000113     HROFDY 1.0 1.0 1.0 1.0 1.0 1.0
EMISFACT L0000113     HROFDY 1.0 0.0 0.0 0.0 0.0 0.0
EMISFACT L0000114     HROFDY 0.0 0.0 0.0 0.0 0.0 0.0
EMISFACT L0000114     HROFDY 0.0 1.0 1.0 1.0 1.0 1.0
EMISFACT L0000114     HROFDY 1.0 1.0 1.0 1.0 1.0 1.0
EMISFACT L0000114     HROFDY 1.0 0.0 0.0 0.0 0.0 0.0
EMISFACT L0000115     HROFDY 0.0 0.0 0.0 0.0 0.0 0.0
EMISFACT L0000115     HROFDY 0.0 1.0 1.0 1.0 1.0 1.0
EMISFACT L0000115     HROFDY 1.0 1.0 1.0 1.0 1.0 1.0
EMISFACT L0000115     HROFDY 1.0 0.0 0.0 0.0 0.0 0.0
EMISFACT L0000116     HROFDY 0.0 0.0 0.0 0.0 0.0 0.0
EMISFACT L0000116     HROFDY 0.0 1.0 1.0 1.0 1.0 1.0
EMISFACT L0000116     HROFDY 1.0 1.0 1.0 1.0 1.0 1.0
EMISFACT L0000116     HROFDY 1.0 0.0 0.0 0.0 0.0 0.0
```

```
EMISFACT L0000117     HROFDY 0.0 0.0 0.0 0.0 0.0 0.0
EMISFACT L0000117     HROFDY 0.0 1.0 1.0 1.0 1.0 1.0
EMISFACT L0000117     HROFDY 1.0 1.0 1.0 1.0 1.0 1.0
EMISFACT L0000117     HROFDY 1.0 0.0 0.0 0.0 0.0 0.0
EMISFACT L0000118     HROFDY 0.0 0.0 0.0 0.0 0.0 0.0
EMISFACT L0000118     HROFDY 0.0 1.0 1.0 1.0 1.0 1.0
EMISFACT L0000118     HROFDY 1.0 1.0 1.0 1.0 1.0 1.0
EMISFACT L0000118     HROFDY 1.0 0.0 0.0 0.0 0.0 0.0
EMISFACT L0000119     HROFDY 0.0 0.0 0.0 0.0 0.0 0.0
EMISFACT L0000119     HROFDY 0.0 1.0 1.0 1.0 1.0 1.0
EMISFACT L0000119     HROFDY 1.0 1.0 1.0 1.0 1.0 1.0
EMISFACT L0000119     HROFDY 1.0 0.0 0.0 0.0 0.0 0.0
EMISFACT L0000120     HROFDY 0.0 0.0 0.0 0.0 0.0 0.0
EMISFACT L0000120     HROFDY 0.0 1.0 1.0 1.0 1.0 1.0
EMISFACT L0000120     HROFDY 1.0 1.0 1.0 1.0 1.0 1.0
EMISFACT L0000120     HROFDY 1.0 0.0 0.0 0.0 0.0 0.0
EMISFACT L0000121     HROFDY 0.0 0.0 0.0 0.0 0.0 0.0
EMISFACT L0000121     HROFDY 0.0 1.0 1.0 1.0 1.0 1.0
EMISFACT L0000121     HROFDY 1.0 1.0 1.0 1.0 1.0 1.0
EMISFACT L0000121     HROFDY 1.0 0.0 0.0 0.0 0.0 0.0
EMISFACT L0000122     HROFDY 0.0 0.0 0.0 0.0 0.0 0.0
EMISFACT L0000122     HROFDY 0.0 1.0 1.0 1.0 1.0 1.0
EMISFACT L0000122     HROFDY 1.0 1.0 1.0 1.0 1.0 1.0
EMISFACT L0000122     HROFDY 1.0 0.0 0.0 0.0 0.0 0.0
EMISFACT L0000123     HROFDY 0.0 0.0 0.0 0.0 0.0 0.0
EMISFACT L0000123     HROFDY 0.0 1.0 1.0 1.0 1.0 1.0
EMISFACT L0000123     HROFDY 1.0 1.0 1.0 1.0 1.0 1.0
EMISFACT L0000123     HROFDY 1.0 0.0 0.0 0.0 0.0 0.0
EMISFACT L0000124     HROFDY 0.0 0.0 0.0 0.0 0.0 0.0
EMISFACT L0000124     HROFDY 0.0 1.0 1.0 1.0 1.0 1.0
EMISFACT L0000124     HROFDY 1.0 1.0 1.0 1.0 1.0 1.0
EMISFACT L0000124     HROFDY 1.0 0.0 0.0 0.0 0.0 0.0
EMISFACT L0000125     HROFDY 0.0 0.0 0.0 0.0 0.0 0.0
EMISFACT L0000125     HROFDY 0.0 1.0 1.0 1.0 1.0 1.0
EMISFACT L0000125     HROFDY 1.0 1.0 1.0 1.0 1.0 1.0
EMISFACT L0000125     HROFDY 1.0 0.0 0.0 0.0 0.0 0.0
EMISFACT L0000126     HROFDY 0.0 0.0 0.0 0.0 0.0 0.0
EMISFACT L0000126     HROFDY 0.0 1.0 1.0 1.0 1.0 1.0
EMISFACT L0000126     HROFDY 1.0 1.0 1.0 1.0 1.0 1.0
EMISFACT L0000126     HROFDY 1.0 0.0 0.0 0.0 0.0 0.0
EMISFACT L0000127     HROFDY 0.0 0.0 0.0 0.0 0.0 0.0
EMISFACT L0000127     HROFDY 0.0 1.0 1.0 1.0 1.0 1.0
EMISFACT L0000127     HROFDY 1.0 1.0 1.0 1.0 1.0 1.0
EMISFACT L0000127     HROFDY 1.0 0.0 0.0 0.0 0.0 0.0
EMISFACT L0000128     HROFDY 0.0 0.0 0.0 0.0 0.0 0.0
EMISFACT L0000128     HROFDY 0.0 1.0 1.0 1.0 1.0 1.0
EMISFACT L0000128     HROFDY 1.0 1.0 1.0 1.0 1.0 1.0
EMISFACT L0000128     HROFDY 1.0 0.0 0.0 0.0 0.0 0.0
EMISFACT L0000129     HROFDY 0.0 0.0 0.0 0.0 0.0 0.0
EMISFACT L0000129     HROFDY 0.0 1.0 1.0 1.0 1.0 1.0
EMISFACT L0000129     HROFDY 1.0 1.0 1.0 1.0 1.0 1.0
EMISFACT L0000129     HROFDY 1.0 0.0 0.0 0.0 0.0 0.0
EMISFACT L0000130     HROFDY 0.0 0.0 0.0 0.0 0.0 0.0
EMISFACT L0000130     HROFDY 0.0 1.0 1.0 1.0 1.0 1.0
EMISFACT L0000130     HROFDY 1.0 1.0 1.0 1.0 1.0 1.0
EMISFACT L0000130     HROFDY 1.0 0.0 0.0 0.0 0.0 0.0
EMISFACT L0000131     HROFDY 0.0 0.0 0.0 0.0 0.0 0.0
EMISFACT L0000131     HROFDY 0.0 1.0 1.0 1.0 1.0 1.0
EMISFACT L0000131     HROFDY 1.0 1.0 1.0 1.0 1.0 1.0
EMISFACT L0000131     HROFDY 1.0 0.0 0.0 0.0 0.0 0.0
EMISFACT L0000132     HROFDY 0.0 0.0 0.0 0.0 0.0 0.0
EMISFACT L0000132     HROFDY 0.0 1.0 1.0 1.0 1.0 1.0
EMISFACT L0000132     HROFDY 1.0 1.0 1.0 1.0 1.0 1.0
EMISFACT L0000132     HROFDY 1.0 0.0 0.0 0.0 0.0 0.0
EMISFACT L0000133     HROFDY 0.0 0.0 0.0 0.0 0.0 0.0
EMISFACT L0000133     HROFDY 0.0 1.0 1.0 1.0 1.0 1.0
EMISFACT L0000133     HROFDY 1.0 1.0 1.0 1.0 1.0 1.0
EMISFACT L0000133     HROFDY 1.0 0.0 0.0 0.0 0.0 0.0
EMISFACT L0000134     HROFDY 0.0 0.0 0.0 0.0 0.0 0.0
EMISFACT L0000134     HROFDY 0.0 1.0 1.0 1.0 1.0 1.0
EMISFACT L0000134     HROFDY 1.0 1.0 1.0 1.0 1.0 1.0
EMISFACT L0000134     HROFDY 1.0 0.0 0.0 0.0 0.0 0.0
EMISFACT L0000135     HROFDY 0.0 0.0 0.0 0.0 0.0 0.0
EMISFACT L0000135     HROFDY 0.0 1.0 1.0 1.0 1.0 1.0
EMISFACT L0000135     HROFDY 1.0 1.0 1.0 1.0 1.0 1.0
EMISFACT L0000135     HROFDY 1.0 0.0 0.0 0.0 0.0 0.0
EMISFACT L0000136     HROFDY 0.0 0.0 0.0 0.0 0.0 0.0
EMISFACT L0000136     HROFDY 0.0 1.0 1.0 1.0 1.0 1.0
EMISFACT L0000136     HROFDY 1.0 1.0 1.0 1.0 1.0 1.0
EMISFACT L0000136     HROFDY 1.0 0.0 0.0 0.0 0.0 0.0
EMISFACT L0000137     HROFDY 0.0 0.0 0.0 0.0 0.0 0.0
```

```
   EMISFACT L0000137     HROFDY 0.0 1.0 1.0 1.0 1.0 1.0
   EMISFACT L0000137     HROFDY 1.0 1.0 1.0 1.0 1.0 1.0
   EMISFACT L0000137     HROFDY 1.0 0.0 0.0 0.0 0.0 0.0
   EMISFACT L0000138     HROFDY 0.0 0.0 0.0 0.0 0.0 0.0
   EMISFACT L0000138     HROFDY 0.0 1.0 1.0 1.0 1.0 1.0
   EMISFACT L0000138     HROFDY 1.0 1.0 1.0 1.0 1.0 1.0
   EMISFACT L0000138     HROFDY 1.0 0.0 0.0 0.0 0.0 0.0
   EMISFACT IDLESHEL     HROFDY 0.0 0.0 0.0 0.0 0.0 0.0
   EMISFACT IDLESHEL     HROFDY 0.0 1.0 1.0 1.0 1.0 1.0
   EMISFACT IDLESHEL     HROFDY 1.0 1.0 1.0 1.0 1.0 1.0
   EMISFACT IDLESHEL     HROFDY 1.0 0.0 0.0 0.0 0.0 0.0
   EMISFACT IDLECAL      HROFDY 0.0 0.0 0.0 0.0 0.0 0.0
   EMISFACT IDLECAL      HROFDY 0.0 1.0 1.0 1.0 1.0 1.0
   EMISFACT IDLECAL      HROFDY 1.0 1.0 1.0 1.0 1.0 1.0
   EMISFACT IDLECAL      HROFDY 1.0 0.0 0.0 0.0 0.0 0.0
   SRCGROUP ALL
SO FINISHED
**
****************************************
** AERMOD Receptor Pathway
****************************************
**
**
RE STARTING
   INCLUDED "Pit TOG.rou"
RE FINISHED
**
****************************************
** AERMOD Meteorology Pathway
****************************************
**
**
ME STARTING
   SURFFILE ..\burk8.sfc
   PROFFILE ..\burk8.PFL
   SURFDATA 0 2008 Burbank 378.62 3782.24
   UAIRDATA 3190 2008
   SITEDATA 99999 2008
   PROFBASE 175.0 METERS
ME FINISHED
**
****************************************
** AERMOD Output Pathway
****************************************
**
**
OU STARTING
   RECTABLE ALLAVE 1ST
   RECTABLE 1 1ST
** Auto-Generated Plotfiles
   PLOTFILE 1 ALL 1ST "PIT TOG.AD\01H1GALL.PLT" 31
   PLOTFILE ANNUAL ALL "PIT TOG.AD\AN00GALL.PLT" 32
   SUMMFILE "Pit TOG.sum"
OU FINISHED
**
****************************************
** Project Parameters
****************************************
** PROJCTN  CoordinateSystemUTM
** DESCPTN  UTM: Universal Transverse Mercator
** DATUM    World Geodetic System 1984
** DTMRGN   Global Definition
** UNITS    m
** ZONE     11
** ZONEINX  0
**
```

APPENDIX J

14-Cubic Yard Haul Trucks Alternative CalEEMod Model Annual Printouts

Pacoima Spreading Grounds Improvement Project with 14 CY Trucks

Los Angeles-South Coast County, Annual

1.0 Project Characteristics

1.1 Land Usage

Land Uses	Size	Metric	Lot Acreage	Floor Surface Area	Population
User Defined Industrial	169.00	User Defined Unit	169.00	0.00	0

1.2 Other Project Characteristics

Urbanization	Urban	**Wind Speed (m/s)**	2.2	**Precipitation Freq (Days)**	33
Climate Zone	12			**Operational Year**	2016
Utility Company	Los Angeles Department of Water & Power				
CO2 Intensity (lb/MWhr)	1227.89	**CH4 Intensity (lb/MWhr)**	0.029	**N2O Intensity (lb/MWhr)**	0.006

1.3 User Entered Comments & Non-Default Data

Project Characteristics -

Land Use - 169 acres of User Defined Industrial

Construction Phase - Construction was modelled as occurring from 3-1-16 to 9-1-17

Off-road Equipment - 2 Excavators (8 hrs each), 2 rubber tired dozers (8 hrs each), 1 sediment shaker (Crushing/Proc Equip) (8 hrs), 3 water trucks (Off-Hwy Trucks) (4 hrs each), 1 street sweeper (4 hrs)

Trips and VMT - 18 worker trips per TIA. 77 haul trips of concrete debris to Sunshine Cyn Landfill 8 miles length

Grading - 775 acres disturbed (default). 614 cubic yards of concrete removed.

Vehicle Trips - 480 haul truck trips or 2.84 trips per acre. 100% Primary Trips. Non Res C-C 100% and 5.7 miles.

Vechicle Emission Factors - Fleet Mix 100% MHD

Vechicle Emission Factors - Fleet Mix 100% MHD

Vechicle Emission Factors - Fleet Mix 100% MHD

Construction Off-road Equipment Mitigation - Water Exposed Areas 3 times per day and maintain Unpaved Roads at 12% moisture, per SCAQMD Rule 403 requirements

Road Dust - 1/8 mile of 5.7 mile Haul Truck trips on dirt road or 97.8% of trips on paved roads. Per SCAQMD Rule 403 Unpaved Road Moisture Content 12%

On-road Fugitive Dust - Demo Haul Trip Length 8 miles of which 1/8 mile on dirt roads or 98.4% of haul trip length on paved roads. Per SCAQMD Rule 403 Road Moisture 12%

Table Name	Column Name	Default Value	New Value
tblConstructionPhase	NumDays	310.00	472.00
tblConstructionPhase	NumDaysWeek	5.00	6.00
tblGrading	AcresOfGrading	1,180.00	775.00
tblGrading	MaterialExported	0.00	614.00
tblLandUse	LotAcreage	0.00	169.00
tblOffRoadEquipment	OffRoadEquipmentUnitAmount	1.00	2.00
tblOffRoadEquipment	OffRoadEquipmentUnitAmount	0.00	1.00
tblOffRoadEquipment	OffRoadEquipmentUnitAmount	0.00	3.00
tblOffRoadEquipment	OffRoadEquipmentUnitAmount	0.00	1.00
tblOffRoadEquipment	PhaseName		Grading
tblOffRoadEquipment	PhaseName		Grading
tblOffRoadEquipment	PhaseName		Grading

tblOnRoadDust	HaulingPercentPave	100.00	98.40
tblOnRoadDust	MaterialMoistureContent	0.50	12.00
tblProjectCharacteristics	OperationalYear	2014	2016
tblRoadDust	MaterialMoistureContent	0.5	12
tblRoadDust	RoadPercentPave	100	97.8
tblTripsAndVMT	HaulingTripLength	20.00	8.00
tblVehicleEF	HHD	0.03	0.00
tblVehicleEF	HHD	0.03	0.00
tblVehicleEF	HHD	0.03	0.00
tblVehicleEF	LDA	0.53	0.00
tblVehicleEF	LDA	0.53	0.00
tblVehicleEF	LDA	0.53	0.00
tblVehicleEF	LDT1	0.06	0.00
tblVehicleEF	LDT1	0.06	0.00
tblVehicleEF	LDT1	0.06	0.00
tblVehicleEF	LDT2	0.18	0.00
tblVehicleEF	LDT2	0.18	0.00
tblVehicleEF	LDT2	0.18	0.00
tblVehicleEF	LHD1	0.04	0.00
tblVehicleEF	LHD1	0.04	0.00
tblVehicleEF	LHD1	0.04	0.00
tblVehicleEF	LHD2	6.2830e-003	0.00
tblVehicleEF	LHD2	6.2830e-003	0.00
tblVehicleEF	LHD2	6.2830e-003	0.00
tblVehicleEF	MCY	3.6910e-003	0.00
tblVehicleEF	MCY	3.6910e-003	0.00
tblVehicleEF	MCY	3.6910e-003	0.00
tblVehicleEF	MDV	0.13	0.00

tblVehicleEF	MDV	0.13	0.00
tblVehicleEF	MDV	0.13	0.00
tblVehicleEF	MH	1.6550e-003	0.00
tblVehicleEF	MH	1.6550e-003	0.00
tblVehicleEF	MH	1.6550e-003	0.00
tblVehicleEF	MHD	0.02	1.00
tblVehicleEF	MHD	0.02	1.00
tblVehicleEF	MHD	0.02	1.00
tblVehicleEF	OBUS	2.4530e-003	0.00
tblVehicleEF	OBUS	2.4530e-003	0.00
tblVehicleEF	OBUS	2.4530e-003	0.00
tblVehicleEF	SBUS	5.4300e-004	0.00
tblVehicleEF	SBUS	5.4300e-004	0.00
tblVehicleEF	SBUS	5.4300e-004	0.00
tblVehicleEF	UBUS	3.1570e-003	0.00
tblVehicleEF	UBUS	3.1570e-003	0.00
tblVehicleEF	UBUS	3.1570e-003	0.00
tblVehicleTrips	CC_TL	8.40	5.70
tblVehicleTrips	CC_TTP	0.00	100.00
tblVehicleTrips	PR_TP	0.00	100.00
tblVehicleTrips	ST_TR	0.00	2.84
tblVehicleTrips	WD_TR	0.00	2.84

2.0 Emissions Summary

2.1 Overall Construction

Unmitigated Construction

	ROG	NOx	CO	SO2	Fugitive PM10	Exhaust PM10	PM10 Total	Fugitive PM2.5	Exhaust PM2.5	PM2.5 Total	Bio- CO2	NBio- CO2	Total CO2	CH4	N2O	CO2e
Year	tons/yr										MT/yr					
2016	0.7690	7.9201	5.6532	7.9800e-003	3.3004	0.3863	3.6867	1.6187	0.3601	1.9788	0.0000	734.5762	734.5762	0.1962	0.0000	738.6969
2017	0.5726	5.8446	4.2938	6.3400e-003	3.2915	0.2816	3.5731	1.6163	0.2623	1.8786	0.0000	574.8864	574.8864	0.1550	0.0000	578.1414
Total	**1.3416**	**13.7647**	**9.9470**	**0.0143**	**6.5918**	**0.6679**	**7.2598**	**3.2350**	**0.6224**	**3.8574**	**0.0000**	**1,309.4626**	**1,309.4626**	**0.3512**	**0.0000**	**1,316.8383**

Mitigated Construction

	ROG	NOx	CO	SO2	Fugitive PM10	Exhaust PM10	PM10 Total	Fugitive PM2.5	Exhaust PM2.5	PM2.5 Total	Bio- CO2	NBio- CO2	Total CO2	CH4	N2O	CO2e
Year	tons/yr										MT/yr					
2016	0.7690	6.7489	5.6532	7.9800e-003	1.3158	0.3863	1.7021	0.6385	0.3601	0.9986	0.0000	734.5754	734.5754	0.1962	0.0000	738.6961
2017	0.5726	5.0009	4.2938	6.3400e-003	1.3069	0.2816	1.5885	0.6362	0.2623	0.8985	0.0000	574.8857	574.8857	0.1550	0.0000	578.1408
Total	**1.3416**	**11.7498**	**9.9470**	**0.0143**	**2.6227**	**0.6679**	**3.2906**	**1.2747**	**0.6224**	**1.8971**	**0.0000**	**1,309.4612**	**1,309.4612**	**0.3512**	**0.0000**	**1,316.8368**

	ROG	**NOx**	**CO**	**SO2**	**Fugitive PM10**	**Exhaust PM10**	**PM10 Total**	**Fugitive PM2.5**	**Exhaust PM2.5**	**PM2.5 Total**	**Bio- CO2**	**NBio-CO2**	**Total CO2**	**CH4**	**N20**	**CO2e**
Percent Reduction	**0.00**	**14.64**	**0.00**	**0.00**	**60.21**	**0.00**	**54.67**	**60.60**	**0.00**	**50.82**	**0.00**	**0.00**	**0.00**	**0.00**	**0.00**	**0.00**

2.2 Overall Operational

Unmitigated Operational

	ROG	NOx	CO	SO2	Fugitive PM10	Exhaust PM10	PM10 Total	Fugitive PM2.5	Exhaust PM2.5	PM2.5 Total	Bio- CO2	NBio- CO2	Total CO2	CH4	N2O	CO2e
Category	tons/yr										MT/yr					
Area	2.2000e-004	2.0000e-005	2.2100e-003	0.0000		1.0000e-005	1.0000e-005		1.0000e-005	1.0000e-005	0.0000	4.1900e-003	4.1900e-003	1.0000e-005	0.0000	4.4400e-003
Energy	0.0000	0.0000	0.0000	0.0000		0.0000	0.0000		0.0000	0.0000	0.0000	0.0000	0.0000	0.0000	0.0000	0.0000
Mobile	0.5064	4.3814	4.8374	0.0105	4.0848	0.0787	4.1635	0.4806	0.0724	0.5530	0.0000	946.8421	946.8421	5.6700e-003	0.0000	946.9611
Waste						0.0000	0.0000		0.0000	0.0000	0.0000	0.0000	0.0000	0.0000	0.0000	0.0000
Water						0.0000	0.0000		0.0000	0.0000	0.0000	0.0000	0.0000	0.0000	0.0000	0.0000
Total	**0.5066**	**4.3814**	**4.8397**	**0.0105**	**4.0848**	**0.0788**	**4.1636**	**0.4806**	**0.0724**	**0.5531**	**0.0000**	**946.8463**	**946.8463**	**5.6800e-003**	**0.0000**	**946.9656**

2.2 Overall Operational

Mitigated Operational

	ROG	NOx	CO	SO2	Fugitive PM10	Exhaust PM10	PM10 Total	Fugitive PM2.5	Exhaust PM2.5	PM2.5 Total	Bio- CO2	NBio- CO2	Total CO2	CH4	N2O	CO2e
Category	tons/yr										MT/yr					
Area	2.2000e-004	2.0000e-005	2.2100e-003	0.0000		1.0000e-005	1.0000e-005		1.0000e-005	1.0000e-005	0.0000	4.1900e-003	4.1900e-003	1.0000e-005	0.0000	4.4400e-003
Energy	0.0000	0.0000	0.0000	0.0000		0.0000	0.0000		0.0000	0.0000	0.0000	0.0000	0.0000	0.0000	0.0000	0.0000
Mobile	0.5064	4.3814	4.8374	0.0105	4.0848	0.0787	4.1635	0.4806	0.0724	0.5530	0.0000	946.8421	946.8421	5.6700e-003	0.0000	946.9611
Waste						0.0000	0.0000		0.0000	0.0000	0.0000	0.0000	0.0000	0.0000	0.0000	0.0000
Water						0.0000	0.0000		0.0000	0.0000	0.0000	0.0000	0.0000	0.0000	0.0000	0.0000
Total	**0.5066**	**4.3814**	**4.8397**	**0.0105**	**4.0848**	**0.0788**	**4.1636**	**0.4806**	**0.0724**	**0.5531**	**0.0000**	**946.8463**	**946.8463**	**5.6800e-003**	**0.0000**	**946.9656**

	ROG	NOx	CO	SO2	Fugitive PM10	Exhaust PM10	PM10 Total	Fugitive PM2.5	Exhaust PM2.5	PM2.5 Total	Bio- CO2	NBio-CO2	Total CO2	CH4	N20	CO2e
Percent Reduction	**0.00**	**0.00**	**0.00**	**0.00**	**0.00**	**0.00**	**0.00**	**0.00**	**0.00**	**0.00**	**0.00**	**0.00**	**0.00**	**0.00**	**0.00**	**0.00**

3.0 Construction Detail

Construction Phase

Phase Number	Phase Name	Phase Type	Start Date	End Date	Num Days Week	Num Days	Phase Description
1	Grading	Grading	3/1/2016	9/1/2017	6	472	

Acres of Grading (Site Preparation Phase): 0

Acres of Grading (Grading Phase): 775

Acres of Paving: 0

Residential Indoor: 0; Residential Outdoor: 0; Non-Residential Indoor: 0; Non-Residential Outdoor: 0 (Architectural Coating – sqft)

OffRoad Equipment

Phase Name	Offroad Equipment Type	Amount	Usage Hours	Horse Power	Load Factor
Grading	Crushing/Proc. Equipment	1	8.00	85	0.78
Grading	Excavators	2	8.00	162	0.38
Grading	Off-Highway Trucks	3	4.00	400	0.38
Grading	Rubber Tired Dozers	2	8.00	255	0.40
Grading	Sweepers/Scrubbers	1	4.00	64	0.46

Trips and VMT

Phase Name	Offroad Equipment Count	Worker Trip Number	Vendor Trip Number	Hauling Trip Number	Worker Trip Length	Vendor Trip Length	Hauling Trip Length	Worker Vehicle Class	Vendor Vehicle Class	Hauling Vehicle Class
Grading	12	30.00	0.00	77.00	14.70	6.90	8.00	LD_Mix	HDT_Mix	HHDT

3.1 Mitigation Measures Construction

Water Exposed Area

Water Unpaved Roads

Clean Paved Roads

3.2 Grading - 2016

Unmitigated Construction On-Site

	ROG	NOx	CO	SO2	Fugitive PM10	Exhaust PM10	PM10 Total	Fugitive PM2.5	Exhaust PM2.5	PM2.5 Total	Bio- CO2	NBio- CO2	Total CO2	CH4	N2O	CO2e
Category	tons/yr										MT/yr					
Fugitive Dust					3.2534	0.0000	3.2534	1.6068	0.0000	1.6068	0.0000	0.0000	0.0000	0.0000	0.0000	0.0000
Off-Road	0.7515	7.8921	5.3871	7.4200e-003		0.3859	0.3859		0.3597	0.3597	0.0000	691.7874	691.7874	0.1938	0.0000	695.8577
Total	**0.7515**	**7.8921**	**5.3871**	**7.4200e-003**	**3.2534**	**0.3859**	**3.6393**	**1.6068**	**0.3597**	**1.9665**	**0.0000**	**691.7874**	**691.7874**	**0.1938**	**0.0000**	**695.8577**

Unmitigated Construction Off-Site

	ROG	NOx	CO	SO2	Fugitive PM10	Exhaust PM10	PM10 Total	Fugitive PM2.5	Exhaust PM2.5	PM2.5 Total	Bio- CO2	NBio- CO2	Total CO2	CH4	N2O	CO2e
Category	tons/yr										MT/yr					
Hauling	2.4000e-004	2.8000e-003	3.7300e-003	1.0000e-005	3.7300e-003	4.0000e-005	3.7600e-003	4.1000e-004	3.0000e-005	4.4000e-004	0.0000	0.6057	0.6057	0.0000	0.0000	0.6058
Vendor	0.0000	0.0000	0.0000	0.0000	0.0000	0.0000	0.0000	0.0000	0.0000	0.0000	0.0000	0.0000	0.0000	0.0000	0.0000	0.0000
Worker	0.0172	0.0252	0.2624	5.5000e-004	0.0432	4.2000e-004	0.0437	0.0115	3.8000e-004	0.0119	0.0000	42.1831	42.1831	2.3900e-003	0.0000	42.2334
Total	**0.0175**	**0.0280**	**0.2661**	**5.6000e-004**	**0.0470**	**4.6000e-004**	**0.0474**	**0.0119**	**4.1000e-004**	**0.0123**	**0.0000**	**42.7888**	**42.7888**	**2.3900e-003**	**0.0000**	**42.8392**

3.2 Grading - 2016

Mitigated Construction On-Site

	ROG	NOx	CO	SO2	Fugitive PM10	Exhaust PM10	PM10 Total	Fugitive PM2.5	Exhaust PM2.5	PM2.5 Total	Bio- CO2	NBio- CO2	Total CO2	CH4	N2O	CO2e
Category	tons/yr										MT/yr					
Fugitive Dust					1.2688	0.0000	1.2688	0.6267	0.0000	0.6267	0.0000	0.0000	0.0000	0.0000	0.0000	0.0000
Off-Road	0.7515	6.7210	5.3870	7.4200e-003		0.3859	0.3859		0.3597	0.3597	0.0000	691.7866	691.7866	0.1938	0.0000	695.8569
Total	**0.7515**	**6.7210**	**5.3870**	**7.4200e-003**	**1.2688**	**0.3859**	**1.6547**	**0.6267**	**0.3597**	**0.9863**	**0.0000**	**691.7866**	**691.7866**	**0.1938**	**0.0000**	**695.8569**

Mitigated Construction Off-Site

	ROG	NOx	CO	SO2	Fugitive PM10	Exhaust PM10	PM10 Total	Fugitive PM2.5	Exhaust PM2.5	PM2.5 Total	Bio- CO2	NBio- CO2	Total CO2	CH4	N2O	CO2e
Category	tons/yr										MT/yr					
Hauling	2.4000e-004	2.8000e-003	3.7300e-003	1.0000e-005	3.7300e-003	4.0000e-005	3.7600e-003	4.1000e-004	3.0000e-005	4.4000e-004	0.0000	0.6057	0.6057	0.0000	0.0000	0.6058
Vendor	0.0000	0.0000	0.0000	0.0000	0.0000	0.0000	0.0000	0.0000	0.0000	0.0000	0.0000	0.0000	0.0000	0.0000	0.0000	0.0000
Worker	0.0172	0.0252	0.2624	5.5000e-004	0.0432	4.2000e-004	0.0437	0.0115	3.8000e-004	0.0119	0.0000	42.1831	42.1831	2.3900e-003	0.0000	42.2334
Total	**0.0175**	**0.0280**	**0.2661**	**5.6000e-004**	**0.0470**	**4.6000e-004**	**0.0474**	**0.0119**	**4.1000e-004**	**0.0123**	**0.0000**	**42.7888**	**42.7888**	**2.3900e-003**	**0.0000**	**42.8392**

3.2 Grading - 2017

Unmitigated Construction On-Site

	ROG	NOx	CO	SO2	Fugitive PM10	Exhaust PM10	PM10 Total	Fugitive PM2.5	Exhaust PM2.5	PM2.5 Total	Bio- CO2	NBio- CO2	Total CO2	CH4	N2O	CO2e
Category	tons/yr										MT/yr					
Fugitive Dust					3.2534	0.0000	3.2534	1.6068	0.0000	1.6068	0.0000	0.0000	0.0000	0.0000	0.0000	0.0000
Off-Road	0.5602	5.8245	4.1026	5.9000e-003		0.2813	0.2813		0.2620	0.2620	0.0000	542.1472	542.1472	0.1532	0.0000	545.3652
Total	**0.5602**	**5.8245**	**4.1026**	**5.9000e-003**	**3.2534**	**0.2813**	**3.5347**	**1.6068**	**0.2620**	**1.8688**	**0.0000**	**542.1472**	**542.1472**	**0.1532**	**0.0000**	**545.3652**

Unmitigated Construction Off-Site

	ROG	NOx	CO	SO2	Fugitive PM10	Exhaust PM10	PM10 Total	Fugitive PM2.5	Exhaust PM2.5	PM2.5 Total	Bio- CO2	NBio- CO2	Total CO2	CH4	N2O	CO2e
Category	tons/yr										MT/yr					
Hauling	1.8000e-004	2.0500e-003	2.8500e-003	1.0000e-005	3.7200e-003	3.0000e-005	3.7400e-003	4.1000e-004	2.0000e-005	4.3000e-004	0.0000	0.4735	0.4735	0.0000	0.0000	0.4736
Vendor	0.0000	0.0000	0.0000	0.0000	0.0000	0.0000	0.0000	0.0000	0.0000	0.0000	0.0000	0.0000	0.0000	0.0000	0.0000	0.0000
Worker	0.0123	0.0181	0.1883	4.4000e-004	0.0344	3.2000e-004	0.0347	9.1200e-003	2.9000e-004	9.4200e-003	0.0000	32.2657	32.2657	1.7600e-003	0.0000	32.3026
Total	**0.0124**	**0.0201**	**0.1912**	**4.5000e-004**	**0.0381**	**3.5000e-004**	**0.0384**	**9.5300e-003**	**3.1000e-004**	**9.8500e-003**	**0.0000**	**32.7392**	**32.7392**	**1.7600e-003**	**0.0000**	**32.7762**

3.2 Grading - 2017

Mitigated Construction On-Site

	ROG	NOx	CO	SO2	Fugitive PM10	Exhaust PM10	PM10 Total	Fugitive PM2.5	Exhaust PM2.5	PM2.5 Total	Bio- CO2	NBio- CO2	Total CO2	CH4	N2O	CO2e
Category	tons/yr										MT/yr					
Fugitive Dust					1.2688	0.0000	1.2688	0.6267	0.0000	0.6267	0.0000	0.0000	0.0000	0.0000	0.0000	0.0000
Off-Road	0.5602	4.9807	4.1026	5.9000e-003		0.2813	0.2813		0.2620	0.2620	0.0000	542.1466	542.1466	0.1532	0.0000	545.3646
Total	**0.5602**	**4.9807**	**4.1026**	**5.9000e-003**	**1.2688**	**0.2813**	**1.5501**	**0.6267**	**0.2620**	**0.8886**	**0.0000**	**542.1466**	**542.1466**	**0.1532**	**0.0000**	**545.3646**

Mitigated Construction Off-Site

	ROG	NOx	CO	SO2	Fugitive PM10	Exhaust PM10	PM10 Total	Fugitive PM2.5	Exhaust PM2.5	PM2.5 Total	Bio- CO2	NBio- CO2	Total CO2	CH4	N2O	CO2e
Category	tons/yr										MT/yr					
Hauling	1.8000e-004	2.0500e-003	2.8500e-003	1.0000e-005	3.7200e-003	3.0000e-005	3.7400e-003	4.1000e-004	2.0000e-005	4.3000e-004	0.0000	0.4735	0.4735	0.0000	0.0000	0.4736
Vendor	0.0000	0.0000	0.0000	0.0000	0.0000	0.0000	0.0000	0.0000	0.0000	0.0000	0.0000	0.0000	0.0000	0.0000	0.0000	0.0000
Worker	0.0123	0.0181	0.1883	4.4000e-004	0.0344	3.2000e-004	0.0347	9.1200e-003	2.9000e-004	9.4200e-003	0.0000	32.2657	32.2657	1.7600e-003	0.0000	32.3026
Total	**0.0124**	**0.0201**	**0.1912**	**4.5000e-004**	**0.0381**	**3.5000e-004**	**0.0384**	**9.5300e-003**	**3.1000e-004**	**9.8500e-003**	**0.0000**	**32.7392**	**32.7392**	**1.7600e-003**	**0.0000**	**32.7762**

4.0 Operational Detail - Mobile

4.1 Mitigation Measures Mobile

	ROG	NOx	CO	SO2	Fugitive PM10	Exhaust PM10	PM10 Total	Fugitive PM2.5	Exhaust PM2.5	PM2.5 Total	Bio- CO2	NBio- CO2	Total CO2	CH4	N2O	CO2e
Category	tons/yr										MT/yr					
Mitigated	0.5064	4.3814	4.8374	0.0105	4.0848	0.0787	4.1635	0.4806	0.0724	0.5530	0.0000	946.8421	946.8421	5.6700e-003	0.0000	946.9611
Unmitigated	0.5064	4.3814	4.8374	0.0105	4.0848	0.0787	4.1635	0.4806	0.0724	0.5530	0.0000	946.8421	946.8421	5.6700e-003	0.0000	946.9611

4.2 Trip Summary Information

	Average Daily Trip Rate			Unmitigated	Mitigated
Land Use	Weekday	Saturday	Sunday	Annual VMT	Annual VMT
User Defined Industrial	479.96	479.96	0.00	853,561	853,561
Total	479.96	479.96	0.00	853,561	853,561

4.3 Trip Type Information

	Miles			Trip %			Trip Purpose %		
Land Use	H-W or C-W	H-S or C-C	H-O or C-NW	H-W or C-W	H-S or C-C	H-O or C-NW	Primary	Diverted	Pass-by
User Defined Industrial	16.60	5.70	6.90	0.00	100.00	0.00	100	0	0

LDA	LDT1	LDT2	MDV	LHD1	LHD2	MHD	HHD	OBUS	UBUS	MCY	SBUS	MH
0.000000	0.000000	0.000000	0.000000	0.000000	0.000000	1.000000	0.000000	0.000000	0.000000	0.000000	0.000000	0.000000

4.4 Fleet Mix

5.0 Energy Detail

Historical Energy Use: N

5.1 Mitigation Measures Energy

	ROG	NOx	CO	SO2	Fugitive PM10	Exhaust PM10	PM10 Total	Fugitive PM2.5	Exhaust PM2.5	PM2.5 Total	Bio- CO2	NBio- CO2	Total CO2	CH4	N2O	CO2e
Category	tons/yr										MT/yr					
Electricity Mitigated						0.0000	0.0000		0.0000	0.0000	0.0000	0.0000	0.0000	0.0000	0.0000	0.0000
Electricity Unmitigated						0.0000	0.0000		0.0000	0.0000	0.0000	0.0000	0.0000	0.0000	0.0000	0.0000
NaturalGas Mitigated	0.0000	0.0000	0.0000	0.0000		0.0000	0.0000		0.0000	0.0000	0.0000	0.0000	0.0000	0.0000	0.0000	0.0000
NaturalGas Unmitigated	0.0000	0.0000	0.0000	0.0000		0.0000	0.0000		0.0000	0.0000	0.0000	0.0000	0.0000	0.0000	0.0000	0.0000

5.2 Energy by Land Use - NaturalGas

Unmitigated

	NaturalGas Use	ROG	NOx	CO	SO2	Fugitive PM10	Exhaust PM10	PM10 Total	Fugitive PM2.5	Exhaust PM2.5	PM2.5 Total	Bio- CO2	NBio- CO2	Total CO2	CH4	N2O	CO2e
Land Use	kBTU/yr	tons/yr										MT/yr					
User Defined Industrial	0	0.0000	0.0000	0.0000	0.0000		0.0000	0.0000		0.0000	0.0000	0.0000	0.0000	0.0000	0.0000	0.0000	0.0000
Total		**0.0000**	**0.0000**	**0.0000**	**0.0000**		**0.0000**	**0.0000**		**0.0000**	**0.0000**	**0.0000**	**0.0000**	**0.0000**	**0.0000**	**0.0000**	**0.0000**

5.2 Energy by Land Use - NaturalGas

Mitigated

	NaturalGas Use	ROG	NOx	CO	SO2	Fugitive PM10	Exhaust PM10	PM10 Total	Fugitive PM2.5	Exhaust PM2.5	PM2.5 Total	Bio- CO2	NBio- CO2	Total CO2	CH4	N2O	CO2e
Land Use	kBTU/yr	tons/yr										MT/yr					
User Defined Industrial	0	0.0000	0.0000	0.0000	0.0000		0.0000	0.0000		0.0000	0.0000	0.0000	0.0000	0.0000	0.0000	0.0000	0.0000
Total		**0.0000**	**0.0000**	**0.0000**	**0.0000**		**0.0000**	**0.0000**		**0.0000**	**0.0000**	**0.0000**	**0.0000**	**0.0000**	**0.0000**	**0.0000**	**0.0000**

5.3 Energy by Land Use - Electricity

Unmitigated

	Electricity Use	Total CO2	CH4	N2O	CO2e
Land Use	kWh/yr	MT/yr			
User Defined Industrial	0	0.0000	0.0000	0.0000	0.0000
Total		**0.0000**	**0.0000**	**0.0000**	**0.0000**

5.3 Energy by Land Use - Electricity

Mitigated

	Electricity Use	Total CO2	CH4	N2O	CO2e
Land Use	kWh/yr	MT/yr			
User Defined Industrial	0	0.0000	0.0000	0.0000	0.0000
Total		**0.0000**	**0.0000**	**0.0000**	**0.0000**

6.0 Area Detail

6.1 Mitigation Measures Area

	ROG	NOx	CO	SO2	Fugitive PM10	Exhaust PM10	PM10 Total	Fugitive PM2.5	Exhaust PM2.5	PM2.5 Total	Bio- CO2	NBio- CO2	Total CO2	CH4	N2O	CO2e
Category	tons/yr										MT/yr					
Mitigated	2.2000e-004	2.0000e-005	2.2100e-003	0.0000		1.0000e-005	1.0000e-005		1.0000e-005	1.0000e-005	0.0000	4.1900e-003	4.1900e-003	1.0000e-005	0.0000	4.4400e-003
Unmitigated	2.2000e-004	2.0000e-005	2.2100e-003	0.0000		1.0000e-005	1.0000e-005		1.0000e-005	1.0000e-005	0.0000	4.1900e-003	4.1900e-003	1.0000e-005	0.0000	4.4400e-003

6.2 Area by SubCategory

Unmitigated

	ROG	NOx	CO	SO2	Fugitive PM10	Exhaust PM10	PM10 Total	Fugitive PM2.5	Exhaust PM2.5	PM2.5 Total	Bio- CO2	NBio- CO2	Total CO2	CH4	N2O	CO2e
SubCategory	tons/yr										MT/yr					
Architectural Coating	0.0000					0.0000	0.0000		0.0000	0.0000	0.0000	0.0000	0.0000	0.0000	0.0000	0.0000
Consumer Products	0.0000					0.0000	0.0000		0.0000	0.0000	0.0000	0.0000	0.0000	0.0000	0.0000	0.0000
Landscaping	2.2000e-004	2.0000e-005	2.2100e-003	0.0000		1.0000e-005	1.0000e-005		1.0000e-005	1.0000e-005	0.0000	4.1900e-003	4.1900e-003	1.0000e-005	0.0000	4.4400e-003
Total	**2.2000e-004**	**2.0000e-005**	**2.2100e-003**	**0.0000**		**1.0000e-005**	**1.0000e-005**		**1.0000e-005**	**1.0000e-005**	**0.0000**	**4.1900e-003**	**4.1900e-003**	**1.0000e-005**	**0.0000**	**4.4400e-003**

Mitigated

	ROG	NOx	CO	SO2	Fugitive PM10	Exhaust PM10	PM10 Total	Fugitive PM2.5	Exhaust PM2.5	PM2.5 Total	Bio- CO2	NBio- CO2	Total CO2	CH4	N2O	CO2e
SubCategory	tons/yr										MT/yr					
Consumer Products	0.0000					0.0000	0.0000		0.0000	0.0000	0.0000	0.0000	0.0000	0.0000	0.0000	0.0000
Landscaping	2.2000e-004	2.0000e-005	2.2100e-003	0.0000		1.0000e-005	1.0000e-005		1.0000e-005	1.0000e-005	0.0000	4.1900e-003	4.1900e-003	1.0000e-005	0.0000	4.4400e-003
Architectural Coating	0.0000					0.0000	0.0000		0.0000	0.0000	0.0000	0.0000	0.0000	0.0000	0.0000	0.0000
Total	**2.2000e-004**	**2.0000e-005**	**2.2100e-003**	**0.0000**		**1.0000e-005**	**1.0000e-005**		**1.0000e-005**	**1.0000e-005**	**0.0000**	**4.1900e-003**	**4.1900e-003**	**1.0000e-005**	**0.0000**	**4.4400e-003**

7.0 Water Detail

7.1 Mitigation Measures Water

	Total CO2	CH4	N2O	CO2e
Category	MT/yr			
Mitigated	0.0000	0.0000	0.0000	0.0000
Unmitigated	0.0000	0.0000	0.0000	0.0000

7.2 Water by Land Use

Unmitigated

	Indoor/Outdoor Use	Total CO2	CH4	N2O	CO2e
Land Use	Mgal	MT/yr			
User Defined Industrial	0 / 0	0.0000	0.0000	0.0000	0.0000
Total		**0.0000**	**0.0000**	**0.0000**	**0.0000**

7.2 Water by Land Use

Mitigated

	Indoor/Outdoor Use	Total CO2	CH4	N2O	CO2e
Land Use	Mgal	MT/yr			
User Defined Industrial	0 / 0	0.0000	0.0000	0.0000	0.0000
Total		**0.0000**	**0.0000**	**0.0000**	**0.0000**

8.0 Waste Detail

8.1 Mitigation Measures Waste

Category/Year

	Total CO2	CH4	N2O	CO2e
	MT/yr			
Mitigated	0.0000	0.0000	0.0000	0.0000
Unmitigated	0.0000	0.0000	0.0000	0.0000

8.2 Waste by Land Use

Unmitigated

	Waste Disposed	Total CO2	CH4	N2O	CO2e
Land Use	tons	MT/yr			
User Defined Industrial	0	0.0000	0.0000	0.0000	0.0000
Total		**0.0000**	**0.0000**	**0.0000**	**0.0000**

Mitigated

	Waste Disposed	Total CO2	CH4	N2O	CO2e
Land Use	tons	MT/yr			
User Defined Industrial	0	0.0000	0.0000	0.0000	0.0000
Total		**0.0000**	**0.0000**	**0.0000**	**0.0000**

9.0 Operational Offroad

Equipment Type	Number	Hours/Day	Days/Year	Horse Power	Load Factor	Fuel Type

10.0 Vegetation

APPENDIX K

18-Cubic Yard Haul Trucks Alternative CalEEMod Model Annual Printouts

Pacoima Spreading Grounds Improvement Project with 18 CY Trucks

Los Angeles-South Coast County, Annual

1.0 Project Characteristics

1.1 Land Usage

Land Uses	Size	Metric	Lot Acreage	Floor Surface Area	Population
User Defined Industrial	169.00	User Defined Unit	169.00	0.00	0

1.2 Other Project Characteristics

Urbanization	Urban	**Wind Speed (m/s)**	2.2	**Precipitation Freq (Days)**	33
Climate Zone	12			**Operational Year**	2016
Utility Company	Los Angeles Department of Water & Power				
CO2 Intensity (lb/MWhr)	1227.89	**CH4 Intensity (lb/MWhr)**	0.029	**N2O Intensity (lb/MWhr)**	0.006

1.3 User Entered Comments & Non-Default Data

Project Characteristics -

Land Use - 169 acres of User Defined Industrial

Construction Phase - Construction was modelled as occurring from 3-1-16 to 9-1-17

Off-road Equipment - 2 Excavators (8 hrs each), 2 rubber tired dozers (8 hrs each), 1 sediment shaker (Crushing/Proc Equip) (8 hrs), 3 water trucks (Off-Hwy Trucks) (4 hrs each), 1 street sweeper (4 hrs)

Trips and VMT - 18 worker trips per TIA. 77 haul trips of concrete debris to Sunshine Cyn Landfill 8 miles length

On-road Fugitive Dust - Demo Haul Trip Length 8 miles of which 1/8 mile on dirt roads or 98.4% of haul trip length on paved roads. Per SCAQMD Rule 403 Road Moisture 12%

Grading - 775 acres disturbed (default). 614 cubic yards of concrete removed.

Vehicle Trips - 360 18 CY haul truck trips or 2.13 trips per acre. 100% Primary Trips. Non Res C-C 100% and 5.7 miles.

Vechicle Emission Factors - Fleet Mix 100% HHD

Vechicle Emission Factors - Fleet Mix 100% HHD

Vechicle Emission Factors - Fleet Mix 100% HHD

Road Dust - 1/8 mile of 5.7 mile Haul Truck trips on dirt road or 97.8% of trips on paved roads avg weight 20 tons. Per SCAQMD Rule 403 Unpaved Road Moisture Content 12% and Mean Speed 15 mph.

Construction Off-road Equipment Mitigation - Water Exposed Areas 3 times per day and maintain Unpaved Roads at 12% moisture, per SCAQMD Rule 403 requirements

Table Name	Column Name	Default Value	New Value
tblConstructionPhase	NumDays	310.00	472.00
tblConstructionPhase	NumDaysWeek	5.00	6.00
tblGrading	AcresOfGrading	0.00	775.00
tblGrading	MaterialExported	0.00	614.00
tblLandUse	LotAcreage	0.00	169.00
tblOffRoadEquipment	OffRoadEquipmentUnitAmount	1.00	2.00
tblOnRoadDust	HaulingPercentPave	100.00	98.40
tblOnRoadDust	MaterialMoistureContent	0.50	12.00
tblProjectCharacteristics	OperationalYear	2014	2016
tblRoadDust	MaterialMoistureContent	0.5	12
tblRoadDust	MeanVehicleSpeed	40	15

tblRoadDust	MobileAverageVehicleWeight	2.4	20
tblRoadDust	RoadPercentPave	100	97.8
tblTripsAndVMT	HaulingTripLength	20.00	8.00
tblTripsAndVMT	WorkerTripNumber	23.00	30.00
tblVehicleEF	HHD	0.03	1.00
tblVehicleEF	HHD	0.03	1.00
tblVehicleEF	HHD	0.03	1.00
tblVehicleEF	LDA	0.53	0.00
tblVehicleEF	LDA	0.53	0.00
tblVehicleEF	LDA	0.53	0.00
tblVehicleEF	LDT1	0.06	0.00
tblVehicleEF	LDT1	0.06	0.00
tblVehicleEF	LDT1	0.06	0.00
tblVehicleEF	LDT2	0.18	0.00
tblVehicleEF	LDT2	0.18	0.00
tblVehicleEF	LDT2	0.18	0.00
tblVehicleEF	LHD1	0.04	0.00
tblVehicleEF	LHD1	0.04	0.00
tblVehicleEF	LHD1	0.04	0.00
tblVehicleEF	LHD2	6.2830e-003	0.00
tblVehicleEF	LHD2	6.2830e-003	0.00
tblVehicleEF	LHD2	6.2830e-003	0.00
tblVehicleEF	MCY	3.6910e-003	0.00
tblVehicleEF	MCY	3.6910e-003	0.00
tblVehicleEF	MCY	3.6910e-003	0.00
tblVehicleEF	MDV	0.13	0.00
tblVehicleEF	MDV	0.13	0.00
tblVehicleEF	MDV	0.13	0.00

tblVehicleEF	MH	1.6550e-003	0.00
tblVehicleEF	MH	1.6550e-003	0.00
tblVehicleEF	MH	1.6550e-003	0.00
tblVehicleEF	MHD	0.02	0.00
tblVehicleEF	MHD	0.02	0.00
tblVehicleEF	MHD	0.02	0.00
tblVehicleEF	OBUS	2.4530e-003	0.00
tblVehicleEF	OBUS	2.4530e-003	0.00
tblVehicleEF	OBUS	2.4530e-003	0.00
tblVehicleEF	SBUS	5.4300e-004	0.00
tblVehicleEF	SBUS	5.4300e-004	0.00
tblVehicleEF	SBUS	5.4300e-004	0.00
tblVehicleEF	UBUS	3.1570e-003	0.00
tblVehicleEF	UBUS	3.1570e-003	0.00
tblVehicleEF	UBUS	3.1570e-003	0.00
tblVehicleTrips	CC_TL	8.40	5.70
tblVehicleTrips	CC_TTP	0.00	100.00
tblVehicleTrips	PR_TP	0.00	100.00
tblVehicleTrips	ST_TR	0.00	2.13
tblVehicleTrips	WD_TR	0.00	2.13

2.0 Emissions Summary

2.1 Overall Construction

Unmitigated Construction

	ROG	NOx	CO	SO2	Fugitive PM10	Exhaust PM10	PM10 Total	Fugitive PM2.5	Exhaust PM2.5	PM2.5 Total	Bio- CO2	NBio- CO2	Total CO2	CH4	N2O	CO2e
Year	tons/yr										MT/yr					
2016	0.7685	7.9142	5.6487	7.9700e-003	3.3004	0.3861	3.6864	1.6187	0.3598	1.9785	0.0000	733.9202	733.9202	0.1960	0.0000	738.0367
2017	0.5722	5.8404	4.2902	6.3300e-003	3.2915	0.2814	3.5729	1.6163	0.2621	1.8785	0.0000	574.3733	574.3733	0.1549	0.0000	577.6250
Total	**1.3407**	**13.7546**	**9.9389**	**0.0143**	**6.5918**	**0.6675**	**7.2593**	**3.2350**	**0.6219**	**3.8570**	**0.0000**	**1,308.2935**	**1,308.2935**	**0.3509**	**0.0000**	**1,315.6617**

Mitigated Construction

	ROG	NOx	CO	SO2	Fugitive PM10	Exhaust PM10	PM10 Total	Fugitive PM2.5	Exhaust PM2.5	PM2.5 Total	Bio- CO2	NBio- CO2	Total CO2	CH4	N2O	CO2e
Year	tons/yr										MT/yr					
2016	0.7685	7.9142	5.6487	7.9700e-003	1.3158	0.3861	1.7018	0.6385	0.3598	0.9984	0.0000	733.9194	733.9194	0.1960	0.0000	738.0359
2017	0.5722	5.8404	4.2902	6.3300e-003	1.3069	0.2814	1.5883	0.6362	0.2621	0.8983	0.0000	574.3726	574.3726	0.1549	0.0000	577.6244
Total	**1.3407**	**13.7546**	**9.9389**	**0.0143**	**2.6227**	**0.6675**	**3.2901**	**1.2747**	**0.6219**	**1.8967**	**0.0000**	**1,308.2920**	**1,308.2920**	**0.3509**	**0.0000**	**1,315.6603**

	ROG	**NOx**	**CO**	**SO2**	**Fugitive PM10**	**Exhaust PM10**	**PM10 Total**	**Fugitive PM2.5**	**Exhaust PM2.5**	**PM2.5 Total**	**Bio- CO2**	**NBio-CO2**	**Total CO2**	**CH4**	**N20**	**CO2e**
Percent Reduction	**0.00**	**0.00**	**0.00**	**0.00**	**60.21**	**0.00**	**54.68**	**60.60**	**0.00**	**50.82**	**0.00**	**0.00**	**0.00**	**0.00**	**0.00**	**0.00**

2.2 Overall Operational

Unmitigated Operational

	ROG	NOx	CO	SO2	Fugitive PM10	Exhaust PM10	PM10 Total	Fugitive PM2.5	Exhaust PM2.5	PM2.5 Total	Bio- CO2	NBio- CO2	Total CO2	CH4	N2O	CO2e
Category	tons/yr										MT/yr					
Area	2.2000e-004	2.0000e-005	2.2100e-003	0.0000		1.0000e-005	1.0000e-005		1.0000e-005	1.0000e-005	0.0000	4.1900e-003	4.1900e-003	1.0000e-005	0.0000	4.4400e-003
Energy	0.0000	0.0000	0.0000	0.0000		0.0000	0.0000		0.0000	0.0000	0.0000	0.0000	0.0000	0.0000	0.0000	0.0000
Mobile	0.5625	5.4616	9.1917	0.0125	3.5236	0.0674	3.5910	0.6234	0.0620	0.6854	0.0000	1,135.2206	1,135.2206	9.9500e-003	0.0000	1,135.4295
Waste						0.0000	0.0000		0.0000	0.0000	0.0000	0.0000	0.0000	0.0000	0.0000	0.0000
Water						0.0000	0.0000		0.0000	0.0000	0.0000	0.0000	0.0000	0.0000	0.0000	0.0000
Total	**0.5627**	**5.4617**	**9.1939**	**0.0125**	**3.5236**	**0.0674**	**3.5910**	**0.6234**	**0.0620**	**0.6854**	**0.0000**	**1,135.2248**	**1,135.2248**	**9.9600e-003**	**0.0000**	**1,135.4339**

2.2 Overall Operational

Mitigated Operational

	ROG	NOx	CO	SO2	Fugitive PM10	Exhaust PM10	PM10 Total	Fugitive PM2.5	Exhaust PM2.5	PM2.5 Total	Bio- CO2	NBio- CO2	Total CO2	CH4	N2O	CO2e
Category	tons/yr										MT/yr					
Area	2.2000e-004	2.0000e-005	2.2100e-003	0.0000		1.0000e-005	1.0000e-005		1.0000e-005	1.0000e-005	0.0000	4.1900e-003	4.1900e-003	1.0000e-005	0.0000	4.4400e-003
Energy	0.0000	0.0000	0.0000	0.0000		0.0000	0.0000		0.0000	0.0000	0.0000	0.0000	0.0000	0.0000	0.0000	0.0000
Mobile	0.5625	5.4616	9.1917	0.0125	3.5236	0.0674	3.5910	0.6234	0.0620	0.6854	0.0000	1,135.2206	1,135.2206	9.9500e-003	0.0000	1,135.4295
Waste						0.0000	0.0000		0.0000	0.0000	0.0000	0.0000	0.0000	0.0000	0.0000	0.0000
Water						0.0000	0.0000		0.0000	0.0000	0.0000	0.0000	0.0000	0.0000	0.0000	0.0000
Total	**0.5627**	**5.4617**	**9.1939**	**0.0125**	**3.5236**	**0.0674**	**3.5910**	**0.6234**	**0.0620**	**0.6854**	**0.0000**	**1,135.2248**	**1,135.2248**	**9.9600e-003**	**0.0000**	**1,135.4339**

	ROG	NOx	CO	SO2	Fugitive PM10	Exhaust PM10	PM10 Total	Fugitive PM2.5	Exhaust PM2.5	PM2.5 Total	Bio- CO2	NBio-CO2	Total CO2	CH4	N20	CO2e
Percent Reduction	**0.00**	**0.00**	**0.00**	**0.00**	**0.00**	**0.00**	**0.00**	**0.00**	**0.00**	**0.00**	**0.00**	**0.00**	**0.00**	**0.00**	**0.00**	**0.00**

3.0 Construction Detail

Construction Phase

Phase Number	Phase Name	Phase Type	Start Date	End Date	Num Days Week	Num Days	Phase Description
1	Grading	Grading	3/1/2016	9/1/2017	6	472	

Acres of Grading (Site Preparation Phase): 0

Acres of Grading (Grading Phase): 775

Acres of Paving: 0

Residential Indoor: 0; Residential Outdoor: 0; Non-Residential Indoor: 0; Non-Residential Outdoor: 0 (Architectural Coating – sqft)

OffRoad Equipment

Phase Name	Offroad Equipment Type	Amount	Usage Hours	Horse Power	Load Factor
Grading	Crushing/Proc. Equipment	1	8.00	85	0.78
Grading	Excavators	2	8.00	162	0.38
Grading	Off-Highway Trucks	3	4.00	400	0.38
Grading	Rubber Tired Dozers	2	8.00	255	0.40
Grading	Sweepers/Scrubbers	1	4.00	64	0.46

Trips and VMT

Phase Name	Offroad Equipment Count	Worker Trip Number	Vendor Trip Number	Hauling Trip Number	Worker Trip Length	Vendor Trip Length	Hauling Trip Length	Worker Vehicle Class	Vendor Vehicle Class	Hauling Vehicle Class
Grading	9	30.00	0.00	77.00	14.70	6.90	8.00	LD_Mix	HDT_Mix	HHDT

3.1 Mitigation Measures Construction

Water Exposed Area

Water Unpaved Roads

3.2 Grading - 2016

Unmitigated Construction On-Site

	ROG	NOx	CO	SO2	Fugitive PM10	Exhaust PM10	PM10 Total	Fugitive PM2.5	Exhaust PM2.5	PM2.5 Total	Bio- CO2	NBio- CO2	Total CO2	CH4	N2O	CO2e
Category	tons/yr										MT/yr					
Fugitive Dust					3.2534	0.0000	3.2534	1.6068	0.0000	1.6068	0.0000	0.0000	0.0000	0.0000	0.0000	0.0000
Off-Road	0.7510	7.8863	5.3825	7.4100e-003		0.3856	0.3856		0.3594	0.3594	0.0000	691.1314	691.1314	0.1936	0.0000	695.1975
Total	**0.7510**	**7.8863**	**5.3825**	**7.4100e-003**	**3.2534**	**0.3856**	**3.6390**	**1.6068**	**0.3594**	**1.9662**	**0.0000**	**691.1314**	**691.1314**	**0.1936**	**0.0000**	**695.1975**

Unmitigated Construction Off-Site

	ROG	NOx	CO	SO2	Fugitive PM10	Exhaust PM10	PM10 Total	Fugitive PM2.5	Exhaust PM2.5	PM2.5 Total	Bio- CO2	NBio- CO2	Total CO2	CH4	N2O	CO2e
Category	tons/yr										MT/yr					
Hauling	2.4000e-004	2.8000e-003	3.7300e-003	1.0000e-005	3.7300e-003	4.0000e-005	3.7600e-003	4.1000e-004	3.0000e-005	4.4000e-004	0.0000	0.6057	0.6057	0.0000	0.0000	0.6058
Vendor	0.0000	0.0000	0.0000	0.0000	0.0000	0.0000	0.0000	0.0000	0.0000	0.0000	0.0000	0.0000	0.0000	0.0000	0.0000	0.0000
Worker	0.0172	0.0252	0.2624	5.5000e-004	0.0432	4.2000e-004	0.0437	0.0115	3.8000e-004	0.0119	0.0000	42.1831	42.1831	2.3900e-003	0.0000	42.2334
Total	**0.0175**	**0.0280**	**0.2661**	**5.6000e-004**	**0.0470**	**4.6000e-004**	**0.0474**	**0.0119**	**4.1000e-004**	**0.0123**	**0.0000**	**42.7888**	**42.7888**	**2.3900e-003**	**0.0000**	**42.8392**

3.2 Grading - 2016

Mitigated Construction On-Site

	ROG	NOx	CO	SO2	Fugitive PM10	Exhaust PM10	PM10 Total	Fugitive PM2.5	Exhaust PM2.5	PM2.5 Total	Bio- CO2	NBio- CO2	Total CO2	CH4	N2O	CO2e
Category	tons/yr										MT/yr					
Fugitive Dust					1.2688	0.0000	1.2688	0.6267	0.0000	0.6267	0.0000	0.0000	0.0000	0.0000	0.0000	0.0000
Off-Road	0.7510	7.8863	5.3825	7.4100e-003		0.3856	0.3856		0.3594	0.3594	0.0000	691.1306	691.1306	0.1936	0.0000	695.1967
Total	**0.7510**	**7.8863**	**5.3825**	**7.4100e-003**	**1.2688**	**0.3856**	**1.6544**	**0.6267**	**0.3594**	**0.9861**	**0.0000**	**691.1306**	**691.1306**	**0.1936**	**0.0000**	**695.1967**

Mitigated Construction Off-Site

	ROG	NOx	CO	SO2	Fugitive PM10	Exhaust PM10	PM10 Total	Fugitive PM2.5	Exhaust PM2.5	PM2.5 Total	Bio- CO2	NBio- CO2	Total CO2	CH4	N2O	CO2e
Category	tons/yr										MT/yr					
Hauling	2.4000e-004	2.8000e-003	3.7300e-003	1.0000e-005	3.7300e-003	4.0000e-005	3.7600e-003	4.1000e-004	3.0000e-005	4.4000e-004	0.0000	0.6057	0.6057	0.0000	0.0000	0.6058
Vendor	0.0000	0.0000	0.0000	0.0000	0.0000	0.0000	0.0000	0.0000	0.0000	0.0000	0.0000	0.0000	0.0000	0.0000	0.0000	0.0000
Worker	0.0172	0.0252	0.2624	5.5000e-004	0.0432	4.2000e-004	0.0437	0.0115	3.8000e-004	0.0119	0.0000	42.1831	42.1831	2.3900e-003	0.0000	42.2334
Total	**0.0175**	**0.0280**	**0.2661**	**5.6000e-004**	**0.0470**	**4.6000e-004**	**0.0474**	**0.0119**	**4.1000e-004**	**0.0123**	**0.0000**	**42.7888**	**42.7888**	**2.3900e-003**	**0.0000**	**42.8392**

3.2 Grading - 2017

Unmitigated Construction On-Site

	ROG	NOx	CO	SO2	Fugitive PM10	Exhaust PM10	PM10 Total	Fugitive PM2.5	Exhaust PM2.5	PM2.5 Total	Bio- CO2	NBio- CO2	Total CO2	CH4	N2O	CO2e
Category	tons/yr										MT/yr					
Fugitive Dust					3.2534	0.0000	3.2534	1.6068	0.0000	1.6068	0.0000	0.0000	0.0000	0.0000	0.0000	0.0000
Off-Road	0.5598	5.8203	4.0990	5.8900e-003		0.2811	0.2811		0.2618	0.2618	0.0000	541.6341	541.6341	0.1531	0.0000	544.8488
Total	**0.5598**	**5.8203**	**4.0990**	**5.8900e-003**	**3.2534**	**0.2811**	**3.5345**	**1.6068**	**0.2618**	**1.8686**	**0.0000**	**541.6341**	**541.6341**	**0.1531**	**0.0000**	**544.8488**

Unmitigated Construction Off-Site

	ROG	NOx	CO	SO2	Fugitive PM10	Exhaust PM10	PM10 Total	Fugitive PM2.5	Exhaust PM2.5	PM2.5 Total	Bio- CO2	NBio- CO2	Total CO2	CH4	N2O	CO2e
Category	tons/yr										MT/yr					
Hauling	1.8000e-004	2.0500e-003	2.8500e-003	1.0000e-005	3.7200e-003	3.0000e-005	3.7400e-003	4.1000e-004	2.0000e-005	4.3000e-004	0.0000	0.4735	0.4735	0.0000	0.0000	0.4736
Vendor	0.0000	0.0000	0.0000	0.0000	0.0000	0.0000	0.0000	0.0000	0.0000	0.0000	0.0000	0.0000	0.0000	0.0000	0.0000	0.0000
Worker	0.0123	0.0181	0.1883	4.4000e-004	0.0344	3.2000e-004	0.0347	9.1200e-003	2.9000e-004	9.4200e-003	0.0000	32.2657	32.2657	1.7600e-003	0.0000	32.3026
Total	**0.0124**	**0.0201**	**0.1912**	**4.5000e-004**	**0.0381**	**3.5000e-004**	**0.0384**	**9.5300e-003**	**3.1000e-004**	**9.8500e-003**	**0.0000**	**32.7392**	**32.7392**	**1.7600e-003**	**0.0000**	**32.7762**

3.2 Grading - 2017

Mitigated Construction On-Site

	ROG	NOx	CO	SO2	Fugitive PM10	Exhaust PM10	PM10 Total	Fugitive PM2.5	Exhaust PM2.5	PM2.5 Total	Bio- CO2	NBio- CO2	Total CO2	CH4	N2O	CO2e
Category	tons/yr										MT/yr					
Fugitive Dust					1.2688	0.0000	1.2688	0.6267	0.0000	0.6267	0.0000	0.0000	0.0000	0.0000	0.0000	0.0000
Off-Road	0.5598	5.8202	4.0990	5.8900e-003		0.2811	0.2811		0.2618	0.2618	0.0000	541.6334	541.6334	0.1531	0.0000	544.8482
Total	**0.5598**	**5.8202**	**4.0990**	**5.8900e-003**	**1.2688**	**0.2811**	**1.5499**	**0.6267**	**0.2618**	**0.8885**	**0.0000**	**541.6334**	**541.6334**	**0.1531**	**0.0000**	**544.8482**

Mitigated Construction Off-Site

	ROG	NOx	CO	SO2	Fugitive PM10	Exhaust PM10	PM10 Total	Fugitive PM2.5	Exhaust PM2.5	PM2.5 Total	Bio- CO2	NBio- CO2	Total CO2	CH4	N2O	CO2e
Category	tons/yr										MT/yr					
Hauling	1.8000e-004	2.0500e-003	2.8500e-003	1.0000e-005	3.7200e-003	3.0000e-005	3.7400e-003	4.1000e-004	2.0000e-005	4.3000e-004	0.0000	0.4735	0.4735	0.0000	0.0000	0.4736
Vendor	0.0000	0.0000	0.0000	0.0000	0.0000	0.0000	0.0000	0.0000	0.0000	0.0000	0.0000	0.0000	0.0000	0.0000	0.0000	0.0000
Worker	0.0123	0.0181	0.1883	4.4000e-004	0.0344	3.2000e-004	0.0347	9.1200e-003	2.9000e-004	9.4200e-003	0.0000	32.2657	32.2657	1.7600e-003	0.0000	32.3026
Total	**0.0124**	**0.0201**	**0.1912**	**4.5000e-004**	**0.0381**	**3.5000e-004**	**0.0384**	**9.5300e-003**	**3.1000e-004**	**9.8500e-003**	**0.0000**	**32.7392**	**32.7392**	**1.7600e-003**	**0.0000**	**32.7762**

4.0 Operational Detail - Mobile

4.1 Mitigation Measures Mobile

	ROG	NOx	CO	SO2	Fugitive PM10	Exhaust PM10	PM10 Total	Fugitive PM2.5	Exhaust PM2.5	PM2.5 Total	Bio- CO2	NBio- CO2	Total CO2	CH4	N2O	CO2e
Category	tons/yr										MT/yr					
Mitigated	0.5625	5.4616	9.1917	0.0125	3.5236	0.0674	3.5910	0.6234	0.0620	0.6854	0.0000	1,135.2206	1,135.2206	9.9500e-003	0.0000	1,135.4295
Unmitigated	0.5625	5.4616	9.1917	0.0125	3.5236	0.0674	3.5910	0.6234	0.0620	0.6854	0.0000	1,135.2206	1,135.2206	9.9500e-003	0.0000	1,135.4295

4.2 Trip Summary Information

	Average Daily Trip Rate			Unmitigated	Mitigated
Land Use	Weekday	Saturday	Sunday	Annual VMT	Annual VMT
User Defined Industrial	359.97	359.97	0.00	640,171	640,171
Total	359.97	359.97	0.00	640,171	640,171

4.3 Trip Type Information

	Miles			Trip %			Trip Purpose %		
Land Use	H-W or C-W	H-S or C-C	H-O or C-NW	H-W or C-W	H-S or C-C	H-O or C-NW	Primary	Diverted	Pass-by
User Defined Industrial	16.60	5.70	6.90	0.00	100.00	0.00	100	0	0

LDA	LDT1	LDT2	MDV	LHD1	LHD2	MHD	HHD	OBUS	UBUS	MCY	SBUS	MH
0.000000	0.000000	0.000000	0.000000	0.000000	0.000000	0.000000	1.000000	0.000000	0.000000	0.000000	0.000000	0.000000

4.4 Fleet Mix

5.0 Energy Detail

Historical Energy Use: N

5.1 Mitigation Measures Energy

	ROG	NOx	CO	SO2	Fugitive PM10	Exhaust PM10	PM10 Total	Fugitive PM2.5	Exhaust PM2.5	PM2.5 Total	Bio- CO2	NBio- CO2	Total CO2	CH4	N2O	CO2e
Category	tons/yr										MT/yr					
Electricity Mitigated						0.0000	0.0000		0.0000	0.0000	0.0000	0.0000	0.0000	0.0000	0.0000	0.0000
Electricity Unmitigated						0.0000	0.0000		0.0000	0.0000	0.0000	0.0000	0.0000	0.0000	0.0000	0.0000
NaturalGas Mitigated	0.0000	0.0000	0.0000	0.0000		0.0000	0.0000		0.0000	0.0000	0.0000	0.0000	0.0000	0.0000	0.0000	0.0000
NaturalGas Unmitigated	0.0000	0.0000	0.0000	0.0000		0.0000	0.0000		0.0000	0.0000	0.0000	0.0000	0.0000	0.0000	0.0000	0.0000

5.2 Energy by Land Use - NaturalGas

Unmitigated

	NaturalGas Use	ROG	NOx	CO	SO2	Fugitive PM10	Exhaust PM10	PM10 Total	Fugitive PM2.5	Exhaust PM2.5	PM2.5 Total	Bio- CO2	NBio- CO2	Total CO2	CH4	N2O	CO2e
Land Use	kBTU/yr	tons/yr										MT/yr					
User Defined Industrial	0	0.0000	0.0000	0.0000	0.0000		0.0000	0.0000		0.0000	0.0000	0.0000	0.0000	0.0000	0.0000	0.0000	0.0000
Total		**0.0000**	**0.0000**	**0.0000**	**0.0000**		**0.0000**	**0.0000**		**0.0000**	**0.0000**	**0.0000**	**0.0000**	**0.0000**	**0.0000**	**0.0000**	**0.0000**

5.2 Energy by Land Use - NaturalGas

Mitigated

	NaturalGas Use	ROG	NOx	CO	SO2	Fugitive PM10	Exhaust PM10	PM10 Total	Fugitive PM2.5	Exhaust PM2.5	PM2.5 Total	Bio- CO2	NBio- CO2	Total CO2	CH4	N2O	CO2e
Land Use	kBTU/yr	tons/yr										MT/yr					
User Defined Industrial	0	0.0000	0.0000	0.0000	0.0000		0.0000	0.0000		0.0000	0.0000	0.0000	0.0000	0.0000	0.0000	0.0000	0.0000
Total		**0.0000**	**0.0000**	**0.0000**	**0.0000**		**0.0000**	**0.0000**		**0.0000**	**0.0000**	**0.0000**	**0.0000**	**0.0000**	**0.0000**	**0.0000**	**0.0000**

5.3 Energy by Land Use - Electricity

Unmitigated

	Electricity Use	Total CO2	CH4	N2O	CO2e
Land Use	kWh/yr	MT/yr			
User Defined Industrial	0	0.0000	0.0000	0.0000	0.0000
Total		**0.0000**	**0.0000**	**0.0000**	**0.0000**

5.3 Energy by Land Use - Electricity

Mitigated

	Electricity Use	Total CO2	CH4	N2O	CO2e
Land Use	kWh/yr	MT/yr			
User Defined Industrial	0	0.0000	0.0000	0.0000	0.0000
Total		**0.0000**	**0.0000**	**0.0000**	**0.0000**

6.0 Area Detail

6.1 Mitigation Measures Area

	ROG	NOx	CO	SO2	Fugitive PM10	Exhaust PM10	PM10 Total	Fugitive PM2.5	Exhaust PM2.5	PM2.5 Total	Bio- CO2	NBio- CO2	Total CO2	CH4	N2O	CO2e
Category	tons/yr										MT/yr					
Mitigated	2.2000e-004	2.0000e-005	2.2100e-003	0.0000		1.0000e-005	1.0000e-005		1.0000e-005	1.0000e-005	0.0000	4.1900e-003	4.1900e-003	1.0000e-005	0.0000	4.4400e-003
Unmitigated	2.2000e-004	2.0000e-005	2.2100e-003	0.0000		1.0000e-005	1.0000e-005		1.0000e-005	1.0000e-005	0.0000	4.1900e-003	4.1900e-003	1.0000e-005	0.0000	4.4400e-003

6.2 Area by SubCategory

Unmitigated

	ROG	NOx	CO	SO2	Fugitive PM10	Exhaust PM10	PM10 Total	Fugitive PM2.5	Exhaust PM2.5	PM2.5 Total	Bio- CO2	NBio- CO2	Total CO2	CH4	N2O	CO2e
SubCategory	tons/yr										MT/yr					
Architectural Coating	0.0000					0.0000	0.0000		0.0000	0.0000	0.0000	0.0000	0.0000	0.0000	0.0000	0.0000
Consumer Products	0.0000					0.0000	0.0000		0.0000	0.0000	0.0000	0.0000	0.0000	0.0000	0.0000	0.0000
Landscaping	2.2000e-004	2.0000e-005	2.2100e-003	0.0000		1.0000e-005	1.0000e-005		1.0000e-005	1.0000e-005	0.0000	4.1900e-003	4.1900e-003	1.0000e-005	0.0000	4.4400e-003
Total	**2.2000e-004**	**2.0000e-005**	**2.2100e-003**	**0.0000**		**1.0000e-005**	**1.0000e-005**		**1.0000e-005**	**1.0000e-005**	**0.0000**	**4.1900e-003**	**4.1900e-003**	**1.0000e-005**	**0.0000**	**4.4400e-003**

Mitigated

	ROG	NOx	CO	SO2	Fugitive PM10	Exhaust PM10	PM10 Total	Fugitive PM2.5	Exhaust PM2.5	PM2.5 Total	Bio- CO2	NBio- CO2	Total CO2	CH4	N2O	CO2e
SubCategory	tons/yr										MT/yr					
Consumer Products	0.0000					0.0000	0.0000		0.0000	0.0000	0.0000	0.0000	0.0000	0.0000	0.0000	0.0000
Landscaping	2.2000e-004	2.0000e-005	2.2100e-003	0.0000		1.0000e-005	1.0000e-005		1.0000e-005	1.0000e-005	0.0000	4.1900e-003	4.1900e-003	1.0000e-005	0.0000	4.4400e-003
Architectural Coating	0.0000					0.0000	0.0000		0.0000	0.0000	0.0000	0.0000	0.0000	0.0000	0.0000	0.0000
Total	**2.2000e-004**	**2.0000e-005**	**2.2100e-003**	**0.0000**		**1.0000e-005**	**1.0000e-005**		**1.0000e-005**	**1.0000e-005**	**0.0000**	**4.1900e-003**	**4.1900e-003**	**1.0000e-005**	**0.0000**	**4.4400e-003**

7.0 Water Detail

7.1 Mitigation Measures Water

	Total CO2	CH4	N2O	CO2e
Category	MT/yr			
Mitigated	0.0000	0.0000	0.0000	0.0000
Unmitigated	0.0000	0.0000	0.0000	0.0000

7.2 Water by Land Use

Unmitigated

	Indoor/Outdoor Use	Total CO2	CH4	N2O	CO2e
Land Use	Mgal	MT/yr			
User Defined Industrial	0 / 0	0.0000	0.0000	0.0000	0.0000
Total		**0.0000**	**0.0000**	**0.0000**	**0.0000**

7.2 Water by Land Use

Mitigated

	Indoor/Outdoor Use	Total CO2	CH4	N2O	CO2e
Land Use	Mgal	MT/yr			
User Defined Industrial	0 / 0	0.0000	0.0000	0.0000	0.0000
Total		**0.0000**	**0.0000**	**0.0000**	**0.0000**

8.0 Waste Detail

8.1 Mitigation Measures Waste

Category/Year

	Total CO2	CH4	N2O	CO2e
	MT/yr			
Mitigated	0.0000	0.0000	0.0000	0.0000
Unmitigated	0.0000	0.0000	0.0000	0.0000

8.2 Waste by Land Use

Unmitigated

	Waste Disposed	Total CO2	CH4	N2O	CO2e
Land Use	tons	MT/yr			
User Defined Industrial	0	0.0000	0.0000	0.0000	0.0000
Total		**0.0000**	**0.0000**	**0.0000**	**0.0000**

Mitigated

	Waste Disposed	Total CO2	CH4	N2O	CO2e
Land Use	tons	MT/yr			
User Defined Industrial	0	0.0000	0.0000	0.0000	0.0000
Total		**0.0000**	**0.0000**	**0.0000**	**0.0000**

9.0 Operational Offroad

Equipment Type	Number	Hours/Day	Days/Year	Horse Power	Load Factor	Fuel Type

10.0 Vegetation

APPENDIX B

BIOLOGICAL TECHNICAL REPORT

BIOLOGICAL TECHNICAL REPORT FOR THE PACOIMA SPREADING GROUNDS IMPROVEMENT PROJECT LOS ANGELES COUNTY, CALIFORNIA

Prepared for:

COUNTY OF LOS ANGELES DEPARTMENT OF PUBLIC WORKS
Water Resources Division
900 South Fremont Avenue
Alhambra, California 91803

Prepared by:

CHAMBERS GROUP, INC.
5 Hutton Centre Drive, Suite 750
Santa Ana, California 92707
(949) 261-5414

November 2013

TABLE OF CONTENTS

Page

SECTION 1.0 – INTRODUCTION 1
1.1 PROJECT LOCATION AND ENVIRONMENTAL SETTING 1

SECTION 2.0 – METHODOLOGY 3
2.1 LITERATURE REVIEW 3
2.2 SOILS 3
2.3 BIOLOGICAL RECONNAISSANCE-LEVEL SURVEY 3
2.3.1 Vegetation 3
2.3.2 Wildlife 3

SECTION 3.0 – RESULTS 5
3.1 SOILS 5
3.2 VEGETATION COMMUNITIES 5
3.2.1 Ruderal 5
3.2.2 Developed 5
3.2.3 Disturbed 5
3.2.4 Ornamental Landscaping 6
3.3 SENSITIVE SPECIES 8
3.3.1 Sensitive Plants 9
3.3.2 Sensitive Wildlife 10
3.4 GENERAL PLANTS 10
3.5 GENERAL WILDLIFE 11
3.6 MIGRATORY BIRD TREATY ACT, AS AMENDED (16 USC 703-711) 11

LIST OF APPENDICES

APPENDIX A – SITE PHOTOGRAPHS
APPENDIX B – PLANT SPECIES OBSERVED
APPENDIX C – WILDLIFE SPECIES OBSERVED OR DETECTED

LIST OF TABLES

Page

Table 1: Criteria for Evaluating Sensitive Species Potential for Occurrence 9

LIST OF FIGURES

Page

Figure 1 – Project Site Location and Site Vicinity Map 2

Figure 2: Vegetation Communities Map 7

SECTION 1.0 – INTRODUCTION

This Biological Technical Report has been prepared for the Los Angeles County Department of Public Works (LACDPW) to support California Environmental Quality Act (CEQA) documentation for the proposed actions relating to the Pacoima Spreading Grounds Improvement Project (Project). Information contained in this document has been reported in accordance with accepted scientific and technical standards that are consistent with the requirements of United States Fish and Wildlife Service (USFWS) and the California Department of Fish and Wildlife (CDFW).

Chambers Group, Inc. (Chambers Group) was retained by LACDPW to conduct a literature review and reconnaissance-level survey for the proposed Project. During the survey, biologists identified vegetation communities, determined the potential for the occurrence of sensitive species and habitats that could support sensitive wildlife species onsite, and recorded all plants and animals observed or detected within the Project boundary.

1.1 PROJECT LOCATION AND ENVIRONMENTAL SETTING

Pacoima Spreading Grounds is located in the City of Los Angeles near the intersection of Paxton and Arleta streets on the west side of Pacoima Diversion Channel (Figure 1). The project site is immediately west of Interstate 5 (I-5) and south of California State Route (SR) 118. It is located on the United States Geological Survey (USGS) *San Fernando* 7.5-minute topographic quadrangle. Elevation in the survey area ranges from 905 to 950 feet above mean sea level (amsl). Pacoima Spreading Grounds covers approximately 169 acres in area. The facility is bordered by Filmore Street, Woodman Avenue, San Jose Street, and Arleta Avenue and is bisected by Devonshire Street. The spreading grounds are hydraulically connected by pipes underneath Arleta Avenue and Devonshire Street.

The survey area is approximately 169 acres and includes the Pacoima Spreading Grounds vicinity (Figure 1). The survey area is located in a highly developed area surrounded by private residences, local businesses, and other open space including Devonwood Park (to the west of proposed Project site) and Devonshire Arleta Park (to the east of proposed Project site). Devonwood Park includes a children's play area and picnic tables.

Habitat in the survey area is composed primarily of ruderal, developed, disturbed, and ornamental landscaping vegetation communities (Figure 2). Sandy loam and clay loam soils are present within the Project area.

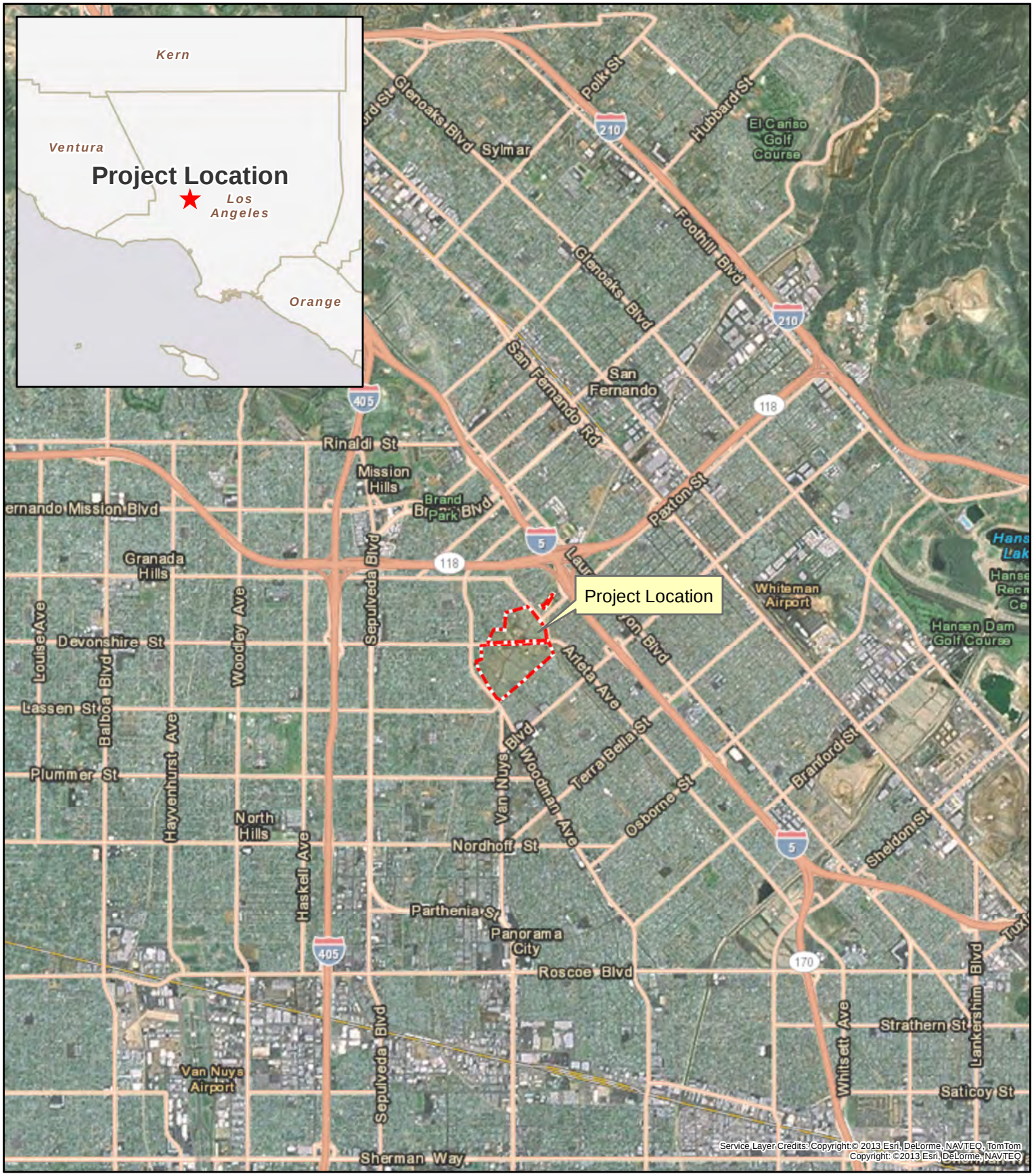

Project Boundary

1:75,000

0 0.5 1 2
Miles

CHAMBERS GROUP

Figure 1

Pacoima Spreading Grounds Improvement Project
Project Location and Vicinity Map

Version Date: 5/14/2013

\\Cgi-gisdata01\gis_data\Projects\20000s\20401 - 20600\20600 Pacoima Spreading Grounds\20600 Project Location & Vicinity Map Pacoima Spreading Grounds .mxd

SECTION 2.0 – METHODOLOGY

2.1 LITERATURE REVIEW

A literature review of the survey area was conducted prior to performing the reconnaissance survey. The most recent records of the California Natural Diversity Database (CNDDB; managed by CDFW 2013) and the California Native Plant Society's Electronic Inventory (CNPSEI) of Rare and Endangered Vascular Plants of California (CNPS 2013) were reviewed for the quadrangles containing and surrounding the Project site, including the *San Fernando, Sunland, Burbank, Oat Mountain,* and *Van Nuys*, California, USGS 7.5-minute quadrangles. These databases contain records of reported occurrences of federally or state listed as endangered or threatened species, proposed endangered or threatened species, California Species of Concern (SSC), or otherwise sensitive species or habitats that may occur within or in the immediate vicinity of the Project site.

2.2 SOILS

Before the survey was conducted, soil maps for Los Angeles County were referenced online (http://soils.usda.gov/technical/classification/osd/index.html) to determine the types of soil found within the Project site. Soils were determined in accordance with categories set forth by the United States Department of Agriculture (USDA) Soil Conservation Service and by referencing the USDA Natural Resources Conservation Service (NRCS) Web Soil Survey (USDA 2013).

2.3 BIOLOGICAL RECONNAISSANCE-LEVEL SURVEY

Chambers Group biologists Heather Franklin and Jeremy Smith conducted the general reconnaissance survey to map vegetation communities and identify the potential for occurrence of sensitive plant and wildlife species and habitats that could support sensitive wildlife species on site. All plants and animals observed or detected on site were recorded. The survey was conducted on foot throughout the Project site between the hours of 8:00 a.m. and 12:00 p.m. on May 13, 2013. Weather conditions during the survey included temperatures ranging from 80 to 87 degrees Fahrenheit with zero percent cloud cover and no precipitation. Photographs of the Project site were taken to document existing site conditions and are provided in Appendix A.

2.3.1 Vegetation

All plant species observed within the Project site were recorded. Vegetation communities within the Project site were identified, qualitatively described, and mapped onto an aerial photograph. Plant communities were determined in accordance with the categories set forth in Holland (1986), Gray and Bramlet (1992), or Sawyer et al. (2009). Plant nomenclature follows that of Baldwin et al. (2012). A comprehensive list of the plant species observed during the survey is provided in Appendix B.

2.3.2 Wildlife

All wildlife and wildlife signs observed and detected, including tracks, scat, carcasses, burrows, excavations, and vocalizations, were recorded. Additional survey time was spent in those habitats most likely to be utilized by wildlife (undisturbed native habitat, wildlife trails, etc.), and in habitats with the potential to support state and/or federally listed or otherwise sensitive species. Notes were made on

the general habitat types, species observed, and the conditions of the Project site. A comprehensive list of the wildlife species observed or detected during the survey is provided in Appendix C.

SECTION 3.0 – RESULTS

3.1 SOILS

After review of USDA Soil Conservation Service and by referencing the USDA Natural Resources Conservation Service (NRCS) Web Soil Survey (USDA 2013), it was determined that the Project site is located within the West San Fernando Valley Area (CA676). Based on the results of the database search, no soil data exists for this area; however, sandy loam and clay loam were observed within the site during the survey.

3.2 VEGETATION COMMUNITIES

Surveys of the Project site identified four vegetation communities: Ruderal, Developed, Disturbed, and Ornamental Landscaping. A map showing the vegetation communities observed within the Project site is provided as Figure 2. Representative site photographs were taken documenting the vegetation communities of the site (Appendix A). A total of 47 plant species were observed within the Project site (Appendix B).

3.2.1 Ruderal

Ruderal vegetation communities are dominated by non-native, weedy species that are adapted to frequent disturbances. Soils in ruderal areas are also typically characterized as heavily compacted. Species observed in this community onsite include common knotweed (*Polygonum arenastrum*), English plantain (*Plantago lanceolata*), and white sweetclover (*Melilotus alba*). The Project area includes 126.5 acres classified as Ruderal vegetation.

3.2.2 Developed

Developed areas are those that have been altered by humans and display man-made structures such as houses, paved roads, buildings, or parks. Developed areas found within the Project site include paved and graded roads. The Project area includes 15.1 acres classified as Developed.

3.2.3 Disturbed

Disturbed areas are often barren and lack vegetation due to clearing or grading. These areas are often dominated by pioneer herbaceous species that readily colonize disturbed ground, such as prickly sow-thistle (*Sonchus asper*) and wild lettuce (*Lactuca serriola*) (Gray and Bramlet 1992). Examples of plant species observed in the Project site include wild lettuce, prickly sow-thistle, and common sow-thistle (*Sonchus oleraceus*). The Project area includes 0.70 acre classified as Disturbed.

3.2.4 Ornamental Landscaping

Ornamental Landscaping includes areas where the vegetation is dominated by non-native horticultural plants (Gray and Bramlet 1992). Typically, the species consist of introduced trees, shrubs, flowers, and turf grass. Examples of Ornamental plant species found on the Project site include non-native pine, eucalyptus trees, and palm trees. The Project Area includes 4.5 acres of Ornamental Landscaping.

Pacoima Spreading Grounds
Vegetation Communities Map

Version Date: 5/22/2013

Project Boundary

Vegetation Community Survey

- (D) Disturbed (0.7 Acre)
- (DV) Developed (15.1 Acres)
- (OL) Ornamental Landscaping (4.5 Acres)
- (OW) Open Water (0.01 Acre)
- (R) Ruderal Vegetation (126.5)

SCALE=1:4,000

0 120 240 480

Feet

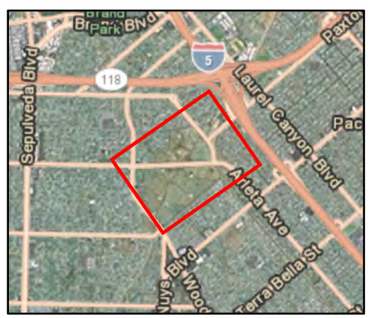

CHAMBERS GROUP

\\Cgi-gisdata01\gis_data\Projects\20000s\20401 - 20600\20600 Pacoima Spreading Grounds\20600 Pacoima Spreading Grounds Vegetation Communities Map.mxd

3.3 SENSITIVE SPECIES

The following information is a list of abbreviations used to help determine the significance of biologically sensitive resources potentially occurring within the Project site.

California Rare Plant Rank (CRPR)

List 1A	=	Plants presumed extinct in California.
List 1B	=	Plants rare and endangered in California and throughout their range.
List 2	=	Plants rare, threatened, or endangered in California but more common elsewhere in their range.
List 3	=	Plants about which we need more information; a review list.
List 4	=	Plants of limited distribution; a watch list.

CRPR Extensions

0.1	=	Seriously endangered in California (greater than 80 percent of occurrences threatened/high degree and immediacy of threat).
0.2	=	Fairly endangered in California (20-80 percent occurrences threatened).
0.3	=	Not very endangered in California (less than 20 percent of occurrences threatened).

Federal

FE	=	Federally listed; Endangered
FT	=	Federally listed; Threatened
FC	=	Federal Candidate for listing

State

ST	=	State listed; Threatened
SE	=	State listed; Endangered
RARE	=	State-listed; Rare (Listed “Rare” animals have been re-designated as Threatened, but Rare plants have retained the Rare designation.)
SSC	=	State Species of Special Concern
WL	=	CDFW Watch List

The criteria used to evaluate the potential for sensitive species to occur within the Project site are outlined in Table 1, below.

Table 1: Criteria for Evaluating Sensitive Species Potential for Occurrence

PFO*	CRITERIA
Absent:	Species is restricted to habitats or environmental conditions that do not occur within the Project site.
Low:	Historical records for this species do not exist within the immediate vicinity (approximately 5 miles) of the Project site, and/or habitats or environmental conditions needed to support the species are of poor quality.
Moderate:	Either a historical record exists of the species within the immediate vicinity of the Project site (approximately 5 miles) and marginal habitat exists within the site; or the habitat requirements or environmental conditions associated with the species occur within the Project site, but no historical records exist within 5 miles of the site.
High:	Both a historical record exists of the species within the Project site or its immediate vicinity (approximately 5 miles), and the habitat requirements and environmental conditions associated with the species occur within the site.
Present:	Species was detected within the site at the time of the survey.

* PFO: Potential for Occurrence

3.3.1 Sensitive Plants

Current database searches (CDFW 2013 and CNPS 2013) resulted in a list of 17 federal- and/or state-listed threatened and endangered or rare sensitive plant species documented to occur within the vicinity of the Project site. After the literature review, the assessment of the various habitat types in the area of the site, and the reconnaissance survey, it was determined that all 17 species are absent from the Project site. Factors used to determine the potential for occurrence included the quality of habitat, elevation, the location of prior CNDDB records of occurrence, and the results of reconnaissance survey.

The following 17 plant species are considered **Absent** from the Project site due to lack of suitable habitat and/or the species is found outside the elevation range:

- Parish's brittlescale (*Atriplex parishii*) – CRPR List 1B.1
- Nevin's barberry (*Berberis nevinii*) – **FC, CE,** CRPR List 1B.1
- round-leaved filaree (*California macrophylla*) – CRPR List 1B.1
- slender mariposa-lily (*Calochortus clavatus* var. *gracilis*) – CRPR List 1B.2
- Plummer's mariposa-lily (*Calochortus plummerae*) – CRPR List 4.2
- southern tarplant (*Centromadia parryi* ssp. *australis*) – CRPR List 1B.1
- San Fernando Valley spineflower (*Chorizanthe parryi* var. *fernandina*) – **FC, CE,** CRPR List 1B.1
- Santa Susana tarplant (*Deinandra minthornii*) – **CR,** CRPR List 1B.2
- slender-horned spineflower (*Dodecahema leptoceras*) – **FE, CE,** CRPR List 1B.1
- many-stemmed dudleya (*Dudleya multicaulis*) – CRPR List 1B.1
- Palmer's grapplinghook (*Harpagonella palmeri*) – CRPR List 4.2
- mesa horkelia (*Horkelia cuneata* var. *puberula*) – CRPR List 1B.1
- Robinson's pepper-grass (*Lepidium virginicum* var. *robinsonii*) – CRPR List 1B.2
- Davidson's bush-mallow (*Malacothamnus davidsonii*) – CRPR List 1B.2
- California Orcutt grass (*Orcuttia californica*) – **FE, CE,** CRPR List 1B.1

- white rabbit-tobacco (*Pseudognaphalium leucocephalum*) – CRPR List 2.2
- Greata's aster (*Symphyotrichum greatae*) – CRPR List 1B.3

3.3.2 Sensitive Wildlife

A current database search (CDFW 2013) resulted in a list of 25 federally and/or state listed endangered or threatened, Species of Concern, or otherwise sensitive wildlife species that may potentially occur within the Project site. After a literature review and the assessment of the various habitat types within the Project site, it was determined that all 25 sensitive wildlife species were considered absent from the site.

The following 25 wildlife species are considered **Absent** from the Project site due to lack of suitable habitat present or because no record shows the existence of these species within 5 miles of the Project site:

- pallid bat (Antrozous pallidus) - SSC
- western pond turtle (Emys marmorata [Actinemys marmorata pallida]) - SSC
- arroyo chub (*Gila orcuttii*) - SSC
- Santa Ana speckled dace (*Rhinichthys osculus* ssp. *3*) - SSC
- Los Angeles pocket mouse (*Perognathus longimembris brevinasus*) - SSC
- Sierra Madre yellow-legged frog (*Rana muscosa*) - FE, SSC
- silvery legless lizard (*Anniella pulchra pulchra*) - SSC
- southern rubber boa (*Charina umbratica*) - ST
- San Bernardino mountain kingsnake (*Lampropeltis zonata parvirubra*) -SSC
- southern grasshopper mouse (*Onychomys torridus ramona*) - SSC
- two-striped garter snake (*Thamnophis hammondii*) - SSC
- western yellow-billed cuckoo (*Coccyzus americanus occidentalis*) - SE
- southwestern willow flycatcher (*Empidonax traillii extimus*) - FE, SE
- western mastiff bat (*Eumops perotis californicus*) - SSC
- western yellow bat (*Lasiurus xanthinus*) - SSC
- San Diego black-tailed jackrabbit (*Lepus californicus bennettii*) - SSC
- California leaf-nosed bat (*Macrotus californicus*) - SSC
- San Diego desert woodrat (*Neotoma lepida intermedia*) - SSC
- big free-tailed bat (*Nyctinomops macrotis*) - SSC
- coast horned lizard (*Phrynosoma blainvillii*) - SSC
- California gnatcatcher (*Polioptila californica californica*) - FT, SSC
- western spadefoot (*Spea hammondii*) - SSC
- American badger (*Taxidea taxus*) - SSC
- least Bell's vireo (*Vireo bellii pusillus*) - FE, SE
- burrowing owl (*Athene cunicularia*) – SSC

3.4 GENERAL PLANTS

A total of 47 plant species were observed during the survey. Plant species observed during the survey represent the characteristics of the existing site conditions. No sensitive plant species were observed during the survey. A complete list of plants observed was recorded during the survey (Appendix B).

3.5 GENERAL WILDLIFE

A total of 23 wildlife species was observed during the survey. One active killdeer nest was observed just outside the southeast corner of the boundary of the western portion of the Project site (located on the west side of Arleta Ave). Four eggs were observed in a nest on the ground at the base of a eucalyptus tree located within the paved portion of the area. Wildlife species observed or detected during the survey were characteristic of the existing site conditions. No sensitive wildlife species were observed during the survey effort. A complete list of wildlife observed or detected was recorded during the survey (Appendix C).

3.6 MIGRATORY BIRD TREATY ACT, AS AMENDED (16 USC 703-711)

In order to comply with the Migratory Bird Treaty Act (MBTA), any vegetation clearing should take place outside the general bird breeding season (February 14 to September 1), to the maximum extent practical. If this is not possible, prior to ground-disturbing activities, a qualified biologist should conduct and submit a migratory nesting bird and raptor survey report. The survey should occur no more than three days prior to initiation of Project activities, and any occupied passerine and/or raptor nests occurring within or adjacent to the study area should be delineated. Additional follow-up surveys may be required by the resource agencies. To the maximum extent practicable, a minimum buffer zone around occupied nests should be maintained during physical ground-disturbing activities. The buffer zone should be sufficient in size to prevent impacts to the nest. Once nesting bird season has ceased, the buffer may be removed.

REFERENCES

Baldwin, B.G., D.H. Goldman, D.J. Keil, R. Patterson, and T.J. Rosatti, and D.H. Wilken (editors)
2012 *The Jepson Manual: Vascular Plants of California, Second Edition*. University of California Press, Berkeley, California.

California Department of Fish and Wildlife (CDFW)
2013 California Natural Diversity Database (CNDDB). RareFind Version 3.1.0. Database Query for the *San Fernando, Sunland, Burbank, Oat Mountain,* and *Van Nuys*, California, USGS 7.5-minute quadrangles. Wildlife and Habitat Data Analysis Branch.

California Native Plant Society (CNPS)
2013 Inventory of Rare and Endangered Plants (online edition). Rare Plant Scientific Advisory Committee, California Native Plant Society, Sacramento, California. Accessed March 2013 from http://www.cnps.org/inventory for the *San Fernando, Sunland, Burbank, Oat Mountain,* and *Van Nuys,* California, USGS 7.5-minute quadrangles.

Gray, J. and D. Bramlet
1992 *Habitat Classification System, Natural Resources, Geographic Information System (GIS) Project*. County of Orange Environmental Management Agency, Santa Ana, California.

Holland, R.F.
1986 *Preliminary Descriptions of the Terrestrial Natural Communities of California*. Unpublished report available from the California Department of Fish and Wildlife, Sacramento, California.

Sawyer, J.O., T. Keeler-Wolf, and J.M. Evens
2009 *A Manual of* California *Vegetation, Second Edition*. California Native Plant Society, Sacramento, California.

United States Department of Agriculture (USDA)
2013 Soil Survey Staff, Natural Resources Conservation Service, United States Department of Agriculture. Official Soil Series Descriptions. http://soils.usda.gov/technical/classification/osd/index.html. Accessed April 2013.

APPENDIX A – SITE PHOTOGRAPHS

APPENDIX A – SITE PHOTOGRAPHS

Photo 1. Photo showing the eastern portion of the site on the east side of Arleta Avenue. Photo facing southeast.

Photo 2. Photo showing a soft bottom channel with some vegetation and water flowing in the eastern portion of the site. Photo facing east.

Photo 3. Photo showing the soft bottom channel in the eastern portion of the site. Photo facing west.

Photo 4. Photo showing the northern portion of the spreading grounds on the north side of Devonshire Street. Photo facing southeast.

Photo 5. Riprap-lined channel in the northern portion of the spreading grounds. Photo facing northeast.

Photo 6. Photo showing the southwest portion of the northern spreading grounds. Photo facing southeast.

Photo 7. The southwestern portion of the northern spreading grounds. Photo facing southeast.

Photo 8. The northeastern portion of the southern portion of the spreading grounds on the south side of Devonshire Street. This photo was taken facing south.

Photo 9. Photo showing the southern portion of the spreading grounds. The photo was taken facing northwest.

Photo 10. Western portion of the spreading grounds. The photo was taken at the corner of the spreading grounds and Arleta Avenue. The photo is facing east.

APPENDIX B – PLANT SPECIES OBSERVED

APPENDIX B: PLANT SPECIES OBSERVED

Scientific Name	Common Name
PINACEAE	**PINE FAMILY**
*Pinus halepensis**	Aleppo pine
ASTERACEAE	**SUNFLOWER FAMILY**
Ambrosia psilostachya	western ragweed
Artemisia californica	California sagebrush
*Centaurea melitensis**	tocalote
*Cotula coronopifolia**	brass-buttons
*Erigeron bonariensis**	flax-leaved horseweed
Helianthus annuus	common sunflower
*Helminthotheca echioides**	bristly ox-tongue
*Lactuca serriola**	prickly lettuce
Pseudognaphalium stramineum	cotton-batting plant
*Senecio vulgaris**	common groundsel
Sonchus asper subsp. *asper**	prickly sow thistle
*Sonchus oleraceus**	common sow thistle
Xanthium spinosum	spiny cocklebur
BRASSICACEAE	**MUSTARD FAMILY**
*Hirschfeldia incana**	shortpod mustard
*Raphanus sativus**	radish
Sisymbrium sp.*	mustard
CHENOPODIACEAE	**GOOSEFOOT FAMILY**
*Chenopodium album**	lamb's quarters
Chenopodium sp.*	goosefoot
*Salsola tragus**	Russian thistle
CONVOLVULACEAE	**MORNING-GLORY FAMILY**
Cuscuta sp.	dodder
*Ricinus communis**	castor-bean
FABACEAE	**LEGUME FAMILY**
Acmispon americanus var. *americanus*	Spanish clover
*Medicago polymorpha**	bur clover
*Melilotus alba**	white sweetclover
*Melilotus indicus**	Indian sweetclover
LYTHRACEAE	**LOOSESTRIFE FAMILY**
*Lythrum hyssopifolia**	hyssop loosestrife
MALVACEAE	**MALLOW FAMILY**
*Malva parviflora**	cheeseweed
MYRTACEAE	**MYRTLE FAMILY**

Scientific Name	Common Name
Eucalyptus sp.*	gum tree
PLANTAGINACEAE	**PLANTAIN FAMILY**
*Plantago lanceolata**	English plantain
*Plantago arenaria**	Indian plantain
*Veronica anagallis-aquatica**	water speedwell
PLATANACEAE	**SYCAMORE FAMILY**
Platanus X *hispanica**	London plane tree
POLYGONACEAE	**BUCKWHEAT FAMILY**
Persicaria maculosa	lady's thumb
*Polygonum arenastrum**	common knotweed
Rumex sp.	dock
SAPINDACEAE	**SOAPBERRY FAMILY**
Acer negundo	California box-elder
SOLANACEAE	**NIGHTSHADE FAMILY**
Datura wrightii	jimson weed
*Nicotiana glauca**	tree tobacco
ZYGOPHYLLACEAE	**CALTROP FAMILY**
*Tribulus terrestris**	puncture vine
ARECACEAE	**PALM FAMILY**
*Washingtonia robusta**	Mexican fan palm
CYPERACEAE	**SEDGE FAMILY**
Bolboschoenus maritimus subsp. *paludosus*	river bulrush
POACEAE	**GRASS FAMILY**
*Avena fatua**	wild oat
Bromus madritensis subsp. *madritensis**	foxtail chess
*Cynodon dactylon**	Bermuda grass
*Festuca perennis**	Italian ryegrass
*Polypogon monspeliensis**	annual beard grass

* Non-native species

APPENDIX C – WILDLIFE SPECIES OBSERVED OR DETECTED

APPENDIX C:
WILDLIFE SPECIES OBSERVED

Scientific Name	Common Name
CLASS AVES	**BIRDS**
ACCIPITRIDAE	**HAWKS, KITES, EAGLES**
Buteo jamaicensis	red-tailed hawk
COLUMBIDAE	**PIGEONS & DOVES**
Zenaida macroura	mourning dove
Streptopelia decaocto	Eurasian collared-Dove
TYRANNIDAE	**TYRANT FLYCATCHERS**
Sayornis nigricans	black phoebe
Sayornis saya	Say's phoebe
TROCHILIDAE	**HUMMINGBIRDS**
Calypte anna	Anna's hummingbird
Selasphorus sasin	Allen's hummingbird
CHARADRIIDAE	**PLOVERS**
Charadrius vociferous	killdeer
CORVIDAE	**JAYS & CROWS**
Corvus brachyrhynchos	American crow
Corvus corax	common raven
MIMIDAE	**MOCKINGBIRDS, THRASHERS**
Mimus polyglottos	northern mockingbird
ARDEIDAE	**HERONS, BITTERNS**
Ardea Herodias	great blue heron
STURNIDAE	**STARLINGS**
Sturnus vulgaris	European starling
ICTERIDAE	**BLACKBIRDS**
Agelaius phoeniceus	red-winged blackbird
ANATIDAE	**DUCKS, GEESE, SWANS**
Anas platyrhynchos	mallard
Anas strepera	gadwall
AEGITHALIDAE	**BUSHTITS**
Psaltriparus minimus	bushtit
FRINGILLIDAE	**FINCHES**
Carpodacus mexicanus	house finch
Spinus psaltria	lesser goldfinch
HIRUNDINIDAE	**SWALLOWS**
Stelgidopteryx serripennis	northern rough-winged swallow
CLASS REPTILIA	**REPTILES**
PHRYNOSOMATIDAE	**ZEBRA-TAILED, EARLESS, FRINGE-TOED, SPINY, TREE, SIDE-BLOTCHED, AND HORNED LIZARDS**
Sceloporus occidentalis	western fence lizard
CLASS AMPHIBIA	**AMPHIBIANS**
HYLIDAE	**TREEFROGS**
Pseudacris regilla	Pacific chorus frog

APPENDIX C:
WILDLIFE SPECIES OBSERVED

Scientific Name	Common Name
CLASS MAMMALIA	**MAMMALS**
SCIURIDAE	**SQUIRRELS**
Spermophilus beecheyi	California ground squirrel

APPENDIX C-1

CULTURAL RESOURCES INVESTIGATION

CULTURAL RESOURCES INVESTIGATION
FOR
PACOIMA SPREADING GROUNDS
IMPROVEMENT PROJECT
LOS ANGELES COUNTY, CALIFORNIA

Prepared for:

COUNTY OF LOS ANGELES DEPARTMENT OF PUBLIC WORKS
Water Resources Division
900 South Fremont Avenue
Alhambra, California 91803

Prepared by:

CHAMBERS GROUP, INC.
5 Hutton Centre Drive, Suite 750
Santa Ana, California 92707
(949) 261-5414

November 2013

This page intentionally left blank

SUMMARY OF FINDINGS (ABSTRACT)

Chambers Group, Inc. (Chambers Group) was retained by the Los Angeles County Department of Public Works (LACDPW) to conduct a cultural resources records search and background literature review for the Pacoima Spreading Grounds Improvement Project (Project), located in the City of Los Angeles, Los Angeles County, California (Figure 1). This report includes the methods and results of the cultural resources records search, background literature review, and significance evaluation provided by Chambers Group.

The subject property is a heavily altered water management facility originally installed at the site in the early 1930s. LACDPW proposes to increase the storage capacity and simplify operations by combining basins and constructing new inter-basin structures. Recharge basins will be reconfigured and deepened. The proposed Project will also modernize the existing intake structures and increase retention capacity of the spreading grounds. The existing intake structure will be replaced, and pipes will be extended from the headworks to the culverts to restrict intake to the design flow rate of 600 cubic feet per second (cfs) and eliminate the potential for overtopping. The Project involves ground disturbance.

To determine the potential presences of cultural resources within the Project area, an extensive remote investigation was implemented per California Environmental Quality Act (CEQA) guidelines. In addition to research and Native American consultation, field images taken by Chambers Group staff were analyzed to determine the level of integrity for any historic-period properties and the potential for significance of the subject property. Using records search results and additional background information, a determination of impacts to cultural resources, including archaeological and historic architectural resources, was completed.

Since no cultural resources appear to be present within or adjacent to the Project area, the Pacoima Spreading Grounds Improvement Project is not anticipated to impact cultural resources. Nevertheless, since the project involves ground disturbance, the potential to uncover subsurface resources remains. In the event such a discovery is made, it is recommended that Project activity be halted until a qualified Cultural Resource Specialist can evaluate the potential resource.

TABLE OF CONTENTS

Page

SUMMARY OF FINDINGS (ABSTRACT) II

SECTION 1.0 – PROJECT DESCRIPTION 1

SECTION 2.0 – METHODS: RESEARCH AND REVIEW 5
2.1 RECORDS SEARCH 5
2.2 NATIVE AMERICAN HERITAGE COMMISSION 5
2.3 RESEARCH METHODS 5

SECTION 3.0 – RESULTS: RESEARCH AND REVIEW 6
3.1 RECORDS SEARCH 6
3.2 NATIVE AMERICAN HERITAGE COMMISSION 8
3.3 LITERATURE REVIEW 8

SECTION 4.0 – HISTORICAL OVERVIEW 9
4.1 EARLY DEVELOPMENT OF THE CITY OF LOS ANGELES 9
4.2 DEVELOPMENT OF THE COMMUNITY OF PACOIMA 9
4.3 PROJECT AREA - PACOIMA SPREADING GROUNDS 9

SECTION 5.0 – DESCRIPTION OF HISTORICAL RESOURCES 11

SECTION 6.0 – FINDINGS AND CONCLUSIONS 12

SECTION 7.0 – REFERENCES 13

SECTION 8.0 – PREPARER'S QUALIFICATIONS 15

LIST OF APPENDICES

APPENDIX A – DPR 523 SERIES FORMS
APPENDIX B – CORRESPONDENCE
APPENDIX C – BACKGROUND AND RESEARCH MATERIALS

LIST OF TABLES

Page

Table 1: Prior Cultural Resources Studies within the Half-Mile Study Area 7

LIST OF FIGURES

Page

Figure 1: Project Location Map 2

Figure 2: Project Vicinity Map 3

Figure 3: Proposed Project Map 4

SECTION 1.0 – PROJECT DESCRIPTION

Chambers Group, Inc. (Chambers Group) was retained by the Los Angeles County Department of Public Works (LACDPW) to conduct a cultural resources records search and background literature review to support California Environmental Quality Act (CEQA) documentation for the proposed actions relating to the Pacoima Spreading Grounds Improvement Project (Project), located in the City of Los Angeles, Los Angeles County, California (Figure 1). This report includes the methods and results of the cultural resources records search, background literature review, and significance evaluation provided by Chambers Group.

The Project area for the Pacoima Spreading Grounds is located near the intersection of Paxton and Arleta streets, on the west side of the Pacoima Diversion Channel (Figure 2). The facility consists of 12 large, shallow basins with a storage capacity of 530 acre-feet (af) and is one of the major water conservation facilities that recharge the San Fernando Basin.

The proposed improvements will increase the storage capacity and simplify operations by combining basins and constructing new interbasin structures. The Project will optimize the recharge capacity of the spreading grounds by modernizing and automating the existing intake structures and improving the spreading basins to increase retention capacity. The existing intake structure will be improved by replacing the current intake canal with four 54-inch diameter reinforced concrete pipes (RCPs). The pipes will extend from the headworks to the culverts that convey water to the spreading basins. After the pipes are installed, the intake channel will be backfilled with approximately 27,850 cubic yards (cy) of sediment removed from the spreading basins. Due to the variability of uncontrolled flows in Pacoima Diversion Channel, careful operation of the radial gate is currently required to regulate flows into the intake canal. When flows in excess of 600 cfs enter the intake canal, water can potentially overtop the intake canal, resulting in localized flooding. Replacing the intake canal with pipes will restrict the intake to the design flow rate of 600 cfs and eliminate the potential for overtopping the intake canal.

The recharge basins will be reconfigured and deepened to allow for greater percolation and capacity (see Figure 3). Approximately 1.6 million cy of sediment will be excavated in order to completely remove the underlying clay layers; however, only 1.37 million cy of sediment will be exported from the site. The remainder of the sediment will be used to backfill the existing intake channel or be returned to the spreading basins to bring the basin inverts up to their finished elevation.

The purpose of this study is to provide information and analysis to determine whether the Project will have the potential to cause substantial adverse change or impacts to properties eligible for or listed in the California Register of Historical Resources (CRHR). The purpose of the CRHR is to maintain listings of the state's historical resources and to indicate which properties are to be protected, to the extent prudent and feasible, from material impairment and substantial adverse change. This study was conducted in compliance with the provisions of CEQA, including the CEQA Statutes (Public Resources Code [PRC] §§ 21083.2 and 21084.1), the CEQA Guidelines (Title 14 California Code of Regulations [CCR], § 15064.5), and PRC § 5024.1 (Title 14 CCR § 4850 et seq.). These statutes and regulations, as amended, are summarized in an annually updated handbook (Association of Environmental Professionals 2012). Properties expected to be directly or indirectly impacted by a proposed project must be evaluated for CRHR eligibility (PRC § 5024.1).

Figure 1: Project Location Map

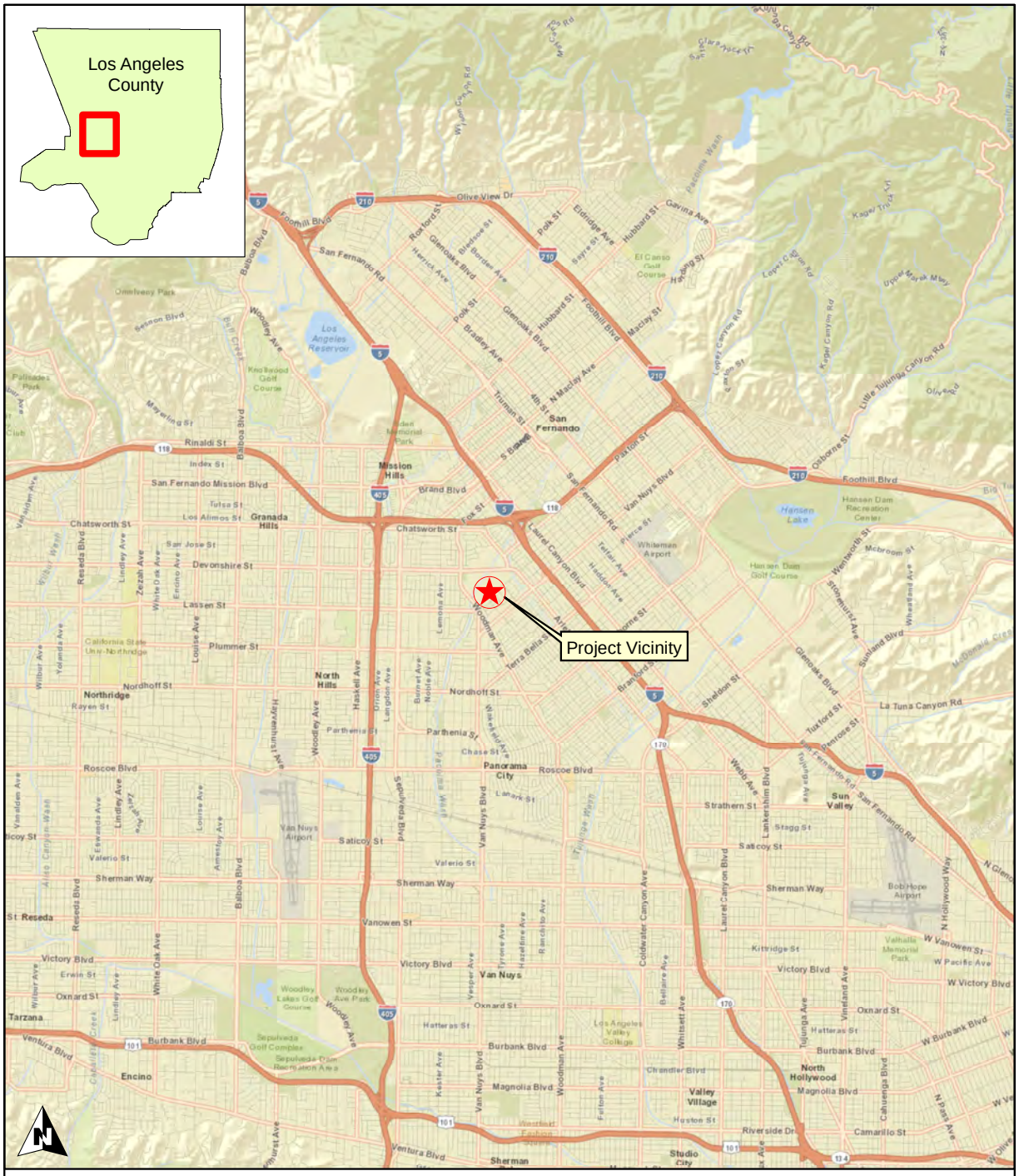
Los Angeles County
Project Vicinity
San Fernando
Mission Hills
Granada Hills
North Hills
Northridge
Panorama City
Sun Valley
Van Nuys
North Hollywood
Valley Village
Encino
Tarzana
Reseda
Sherman
Studio City
Los Angeles Reservoir
Hansen Lake
Whiteman Airport
Van Nuys Airport
Bob Hope Airport
Olive View Dr
Foothill Blvd
San Fernando Rd
Rinaldi St
Brand Blvd
Chatsworth St
Devonshire St
Lassen St
Plummer St
Nordhoff St
Parthenia St
Roscoe Blvd
Saticoy St
Sherman Way
Vanowen St
Victory Blvd
Oxnard St
Burbank Blvd
Magnolia Blvd
Ventura Blvd
Van Nuys Blvd
Sepulveda Blvd
Woodley Ave
Balboa Blvd
Reseda Blvd
Lindley Ave
Tampa Ave
Sepulveda Dam Recreation Area
Woodley Lakes Golf Course
Los Angeles Valley College
Valhalla Memorial Park
Hansen Dam Recreation Center
Hansen Dam Golf Course
Pacoima Wash
Tujunga Wash
Aliso Canyon Wash
Bull Creek
Tujunga Canyon Rd
Little Tujunga Canyon Rd
Kagel Canyon Rd
Lopez Canyon Rd
Olive Rd
La Tuna Canyon Rd
Sunland Blvd
Glenoaks Blvd
Laurel Canyon Blvd
Coldwater Canyon Ave
Whitsett Ave
Tujunga Ave
Vineland Ave
Lankershim Blvd
Van Nuys Blvd
Woodman Ave
Balboa Blvd
Reseda Blvd
Tampa Ave
Lindley Ave
Zelzah Ave
Louise Ave
Haskell Ave
Woodley Ave
Sepulveda Blvd
Van Nuys Blvd
Hazeltine Ave
Kester Ave
Woodman Ave
Fulton Ave
Whitsett Ave
Laurel Canyon Blvd
Coldwater Canyon Ave
Lankershim Blvd
Tujunga Ave
Vineland Ave
Cahuenga Blvd
Lankershim Blvd
Van Nuys Blvd
Sepulveda Blvd
Woodley Ave
Balboa Blvd
Reseda Blvd
Tampa Ave
Lindley Ave
Zelzah Ave
Louise Ave
Haskell Ave
Woodley Ave

Figure 2: Project Vicinity Map

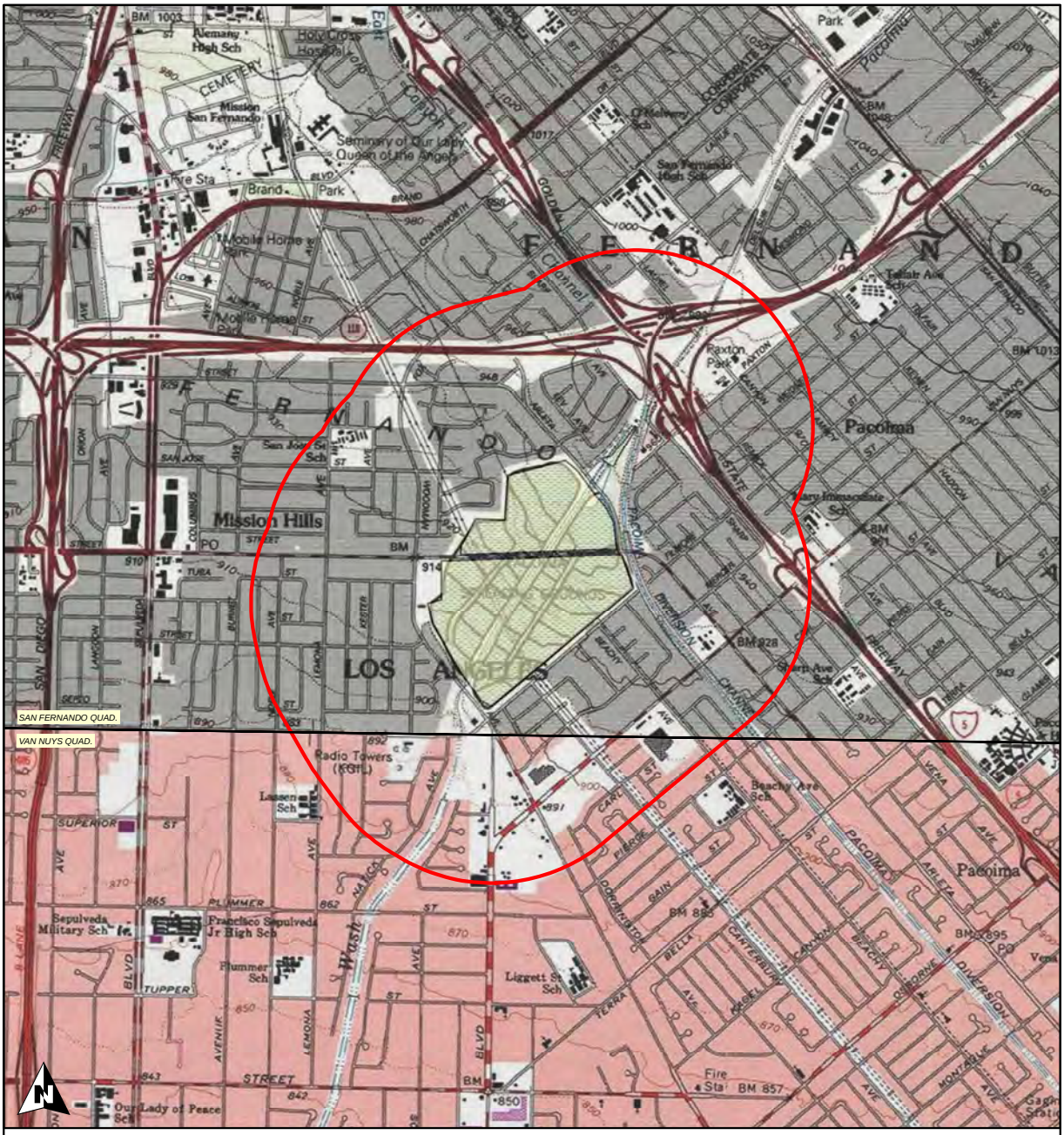

LEGEND

= Project Area

= Half-Mile Study Area

0 0.25 0.5 0.75 1 Miles

0 0.5 1 1.5 2 Kilometers

Figure 2
Pacoima Spreading Grounds Improvement Project
Project Area Map

Figure 3: Proposed Project Map

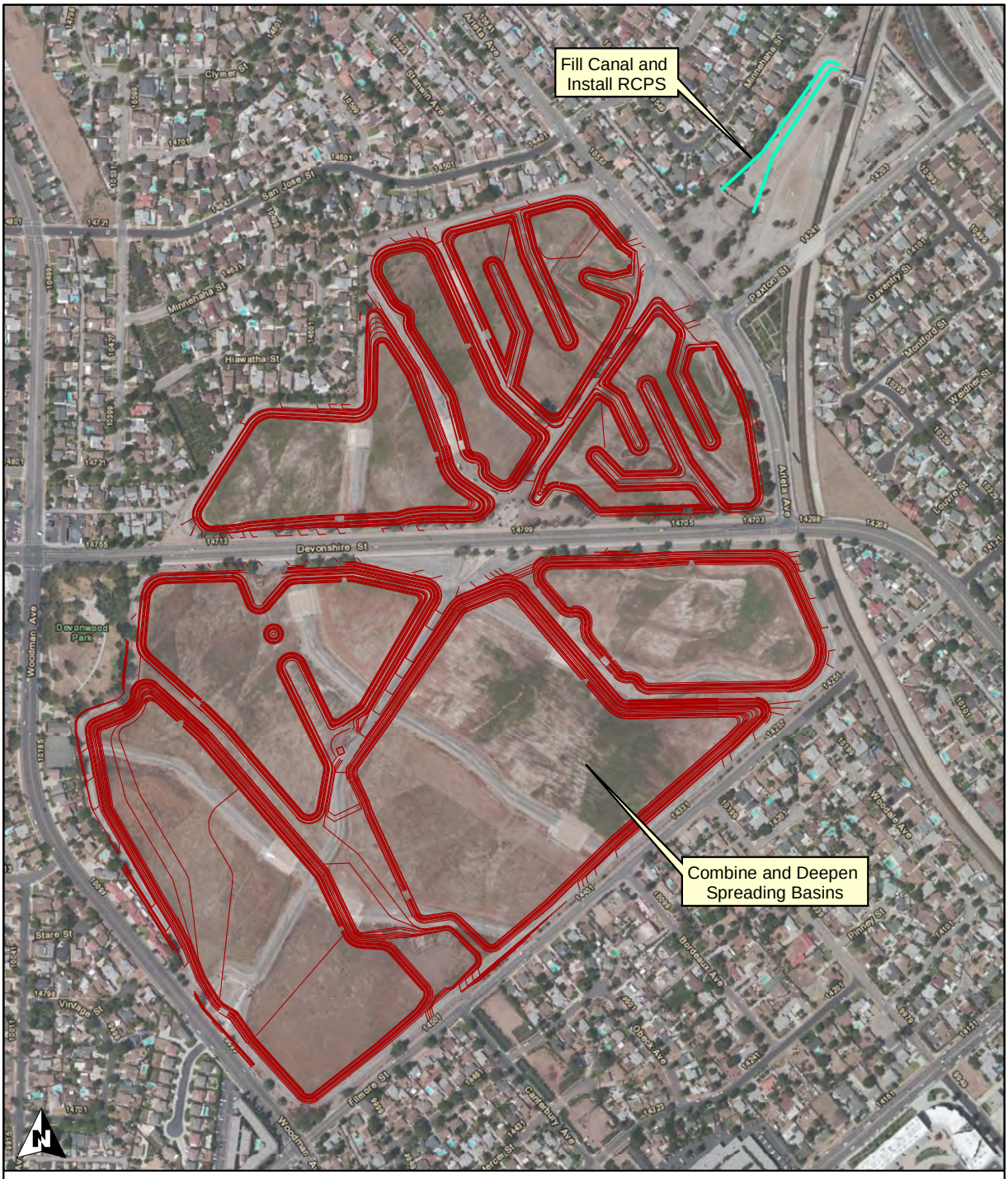

Figure 3
Pacoima Spreading Grounds Improvement Project
Proposed Project Map

0 250 500 750 1,000 Feet

0 100 200 300 400 Meters

SECTION 2.0 – METHODS: RESEARCH AND REVIEW

2.1 RECORDS SEARCH

Chambers Group Cultural Resources Specialist Clarence Bodmer conducted the cultural resources records search and literature review on May 7, 2013, at the South Central Coastal Information Center (SCCIC) located on the campus of California State University, Fullerton. The SCCIC houses records of the California Historical Resources Information System (CHRIS) for Los Angeles and Ventura counties. The records search included a half-mile (0.8-km) radius around the Project area. The purpose of the records search and background literature review was to identify any prehistoric or historic archaeological sites or historic buildings and structures previously recorded within a half-mile radius of the Project area. Mr. Bodmer also reviewed the National Register of Historic Places (NRHP) and Archaeological Determinations of Eligibility as well as historic maps for the presence of possible historic structures or archaeological site locations.

The purpose of reviewing the records was to:

1. identify cultural resources within the Project area and the surrounding vicinity,
2. identify and determine the adequacy of previously conducted cultural resources studies in the Project area,
3. develop management recommendations for cultural resources within the study area, and
4. assess what additional cultural resources studies would need to be undertaken for the Project.

2.2 NATIVE AMERICAN HERITAGE COMMISSION

In addition to the records search conducted at the SCCIC, a letter was sent to the State of California's Native American Heritage Commission (NAHC) on May 1, 2013, requesting a search of their Sacred Lands Inventory. The NAHC provided Chambers Group with a list of Native American contacts that may have knowledge of cultural resources near the Project area. Chambers Group contacted each of the NAHC-listed contacts, requesting information related to any Native American cultural resources within the study area.

2.3 RESEARCH METHODS

Investigators also executed general contextual and site-specific research for the subject property and the Project area. Sources used to conduct this research effort include the Los Angeles County Department of Public Works, the City of Los Angeles Planning Department, the Los Angeles City Historical Society, California State University, Northridge online resources, and Los Angeles Public Library databases. Additionally, investigators consulted the California Department of Transportation (Caltrans) Historic Bridge Survey, California Historic Resources Inventory, and NPS Focus Digital Library and Resources to determine if any properties had been previously surveyed or evaluated.

SECTION 3.0 – RESULTS: RESEARCH AND REVIEW

3.1 RECORDS SEARCH

Results of the records search conducted at the SCCIC indicate that the Project area had not been previously surveyed for cultural resources. The records search did identify 11 cultural resources studies performed between 1994 and 2011 that fall within the half-mile study area (Table 1). These studies consisted of cultural resource inventory surveys and records searches for various highway and infrastructure improvement projects, housing developments, telecommunications installations, water reclamation projects, and community redevelopment programs. None of the previous resource studies are located within the Project area; and no prehistoric or historic-period cultural resources or historic buildings or structures are located within the designated half-mile study area, as indicated by the available records search information.

Despite the lack of previously recorded resources in the study area, since the Pacoima Spreading Grounds facility was originally constructed in the early 1930s, the subject property is the appropriate age (greater than 50 years old) to warrant a historical resource evaluation. In addition to the age requirement, to be considered a CRHR-eligible historical resource, a property must meet one of the following four criteria:

Criterion 1: It is associated with events that have made a significant contribution to the broad patterns of history and cultural heritage;

Criterion 2: It is associated with the lives of persons important in the past;

Criterion 3: It embodies the distinctive characteristics of a type, period, region, or method of construction, or represents the work of an important creative individual, or possesses high artistic value; or

Criterion 4: It has yielded or is likely to yield information important in prehistory or history.

As such, a historical significance evaluation for the property is summarized below, and a formal evaluation is included in Appendix A of this document.

Table 1: Prior Cultural Resources Studies within the Half-Mile Study Area

SCCIC Report Number	Author	Year	Title	Type of Study
LA-3486	Stickel, G.	1994	A Cultural Resources Inventory for the East Valley Water Reclamation Project	Records search and archaeological field survey
LA-4567	Duke, C.	1999	Cultural Resource Assessment for Pacific Bell Mobile Services Facility LA 550-02, in the County of Los Angeles, California	Records search
LA-10179	Smith, P.	2000	Negative Archaeological Survey Report: Highway Project 07-LA-5 KP 60.2/68.7 170 1Y0201	Records search and archaeological field survey
LA-5676	Christy, J.	2001	Negative Archaeological Survey Report: Highway Project 07-LA Van Nuys Blvd., between Arleta and Beachy Avenues	Records search and archaeological field survey
LA-5611	McKenna, J.	2001	A Phase I Cultural Resource Investigation of the Proposed Los Angeles Unified School District East Valley High School #2 in the Community of Pacoima, City of Los Angeles, Los Angeles County, California	Records search and archaeological field survey
LA-5546	Sylvia, B.	2001	Negative Archaeological Survey Report: Highway Project 07-LA-5/118 KP 62.8/63.2 07-174 4N1901	Records search and archaeological field survey
LA-7014	Foster, J.	2002	Negative Archaeological Survey Report: Highway Project 07-LA Devonshire Street Bridge Improvement Project	Records search and archaeological field survey
LA-7798	Bonner, W.	2005	Cultural Resources Records Search Results and Site Visit for Cingular Site Candidate LA-550-01 (NL-056-01), Raofi Shopping Center, 14419 Van Nuys Boulevard, Pacoima, Los Angeles County, California	Records search and archaeological field survey
LA-7805	Wood, C.	2006	Archaeological Survey Report Villas Las Americas 9618 N. Van Nuys Boulevard, Panorama City, California	Records search and archaeological field survey
LA-10756	McKenna, J.	2010	A Cultural Resources Overview and Preliminary Assessment of the Pacoima/Panorama City Redevelopment Plan Amendment/Expansion Project Area, Los Angeles County, California	Cultural resources overview study
LA-11703	Loftus, S.	2011	Cultural Resource Records Search and Site Survey AT&T Site LA0317 (26554) Devonshire & Lemona, 14941 Devonshire, Mission Hills, Los Angeles County, California 91345	Records search and archaeological field survey

Mr. Bodmer reviewed the current inventories of the National Register of Historic Places (NRHP), the California Register of Historical Places (CRHP), the California Historical Landmarks (CHL), and the California Points of Historical Interest (CPHI). No historic properties located within the Project area were found on the NRHP, CRHP, CHL, or the CPHI. The California State Historical Resources Inventory for Los Angeles County was also reviewed to determine if any local resources had been previously evaluated for historical significance. No historical resources were found as a result of this additional research.

3.2 NATIVE AMERICAN HERITAGE COMMISSION

The NAHC responded to Chambers Group's inquiry on May 20, 2013, indicating that a search of their Sacred Lands files failed to support the presence of Native American traditional cultural places in the Project area. The NAHC noted, however, that the area is known to be culturally-sensitive, indicating that cultural resources have previously been uncovered in the general vicinity or region. As such, the NAHC advised Chambers Group to contact other entities familiar with cultural resources in the area. As a result, seven Native American tribes, individuals, and representatives who may have knowledge of cultural resources within or near the Project area were contacted. As of this writing, no response has been received from any of the letter recipients. Sample inquiry letters sent to the contacts can be found in Appendix B of this document.

3.3 LITERATURE REVIEW

The literature review for the Project area and the surrounding vicinity indicates that the Project is located in the ethnographic area associated with the Gabrieliño (Tongva) of the Los Angeles, San Gabriel, Rio Hondo, and Santa Ana river drainages. The Gabrieliño is a Late Prehistoric/Proto-historic group of the Shoshonean language stock (Kroeber 1925; Johnston 1962). The term "Gabrieliño" is a reference to the direct association between the Native American population of the San Gabriel Valley and the Mission San Gabriel de Archangel.

At the time of European contact, the Gabrieliño occupied the Los Angeles Basin, the San Fernando Valley, the coast from Aliso Creek in Orange County north to Topanga Canyon, and three of the southern Channel Islands off the coast of southern California (Bean and Smith 1978; Harrington 1962; Kroeber 1953; McCawley 1996).

Bean and Smith (1978) stated that probably between 50 to 100 mainland villages were led by a chief or *tomyaar*, each with a population of approximately 50 to 100 inhabitants. Numerous plants and animals were utilized for food and shelter. Along with depending on small game, inland villages relied on acorns and other plant resources for subsistence as well as for medicine. Before the establishment of the mission system implemented by the Spanish, Gabrieliño tended to occupy large villages while also using "satellite" sites with much smaller population numbers and more limited subsistence activities. Gabrieliño territory ranged from the coastline to the foothills of the San Gabriel Mountains, providing the tribe with diverse environments and resources to exploit. This in turn fostered regional and long-distance trade networks. Trade was conducted among Gabrieliño and coastal groups such as the Chumash and Juaneño as well as interior groups like the Kitanemuk and Serrano.

SECTION 4.0 – HISTORICAL OVERVIEW

4.1 EARLY DEVELOPMENT OF THE CITY OF LOS ANGELES

By the 1770s, Spanish padres had established a series of missions throughout Alta California. During this time, the Project area was located within the boundaries of lands held by the Mission San Gabriel de Archangel. These expansive holdings encompassed hundreds of acres, stretching across San Fernando Valley. Nine miles away, the Pueblo of Los Angeles was officially founded in 1781. Similar to the Project area, for the first 40 years following the pueblo's establishment, the settlement was considered under authority of the Spanish crown.

When Mexico gained independence from Spain in 1821, the new government began a process of secularization of the large tracts of land once under the authority of the Church under the mission system. At this time the young pueblo of Los Angeles held the largest population in Alta California and was increasingly seen as the regional center for politics, religion, economy, and culture.

Despite the change in governments, the Alta California economy continued to grow during the Mexican Period (1821-1848). Between 1833 and 1834, most of the mission lands were removed from church control and redistributed through grants to individuals, including those who served as Spanish or Mexican soldiers, settlers, and financiers. This redistribution was done to encourage populations to settle in Alta California (Hanna 1951; McWilliams 1973; Dumke 1944; Scott 1977). The Project area is located within one such Mexican land grant, the Rancho Ex-Mission de San Fernando. The Rancho Ex-Mission de San Fernando was established after the secularization of the California missions, with the Pacoima area occupied by sheep ranches and wheat fields.

4.2 DEVELOPMENT OF THE COMMUNITY OF PACOIMA

It was not until 1873 when Senator Charles Maclay of Santa Clara purchased approximately 56,000 acres of land in the northern part of the San Fernando Valley adjacent to the old Ex-Mission de San Fernando Rancho that the town of San Fernando was founded. Jouett Allen, an early settler in the area, purchased approximately 1,000 acres of land between the Pacoima Wash and the Tujunga Wash and retained 500 acres of land for himself and subdivided the remainder into 1-acre tracts. From these subdivided lands, the community of Pacoima was founded in 1887. With the arrival of the railroads in the 1870s and 1880s, the area became accessible to settlers from the Los Angeles area as well as from the east coast. To accommodate this growth, the community was centered around the Southern Pacific Railroad Station.

At the turn of the twentieth century, Pacoima was a rural, agricultural area containing olive groves, peach and apricot orchards, orange and lemon groves, alfalfa fields, and chicken ranches. Until World War II, the area remained a community dotted by small farms, vineyards, and orchards. After the war, the population of the area rose; and the community became increasingly more suburban, serving as a bedroom community to the fast-growing industries in Los Angeles and nearby Glendale and Burbank.

4.3 PROJECT AREA - PACOIMA SPREADING GROUNDS

Construction for the Pacoima spreading grounds began in the early 1930s. The first season of operation of the Pacoima Spreading Grounds was 1932-1933 (LADPW 2013). The purpose of the spreading grounds was to control the flow of water from the canyons and storm water runoff and to recharge groundwater

through the use of permeable basins. Today, the source of water for the spreading grounds comes from controlled flows from Pacoima Dam, partially controlled flow from Lopez Flood Control Basin, uncontrolled flow from East Canyon and Pacoima Wash, and imported water (LADPW 2013). Based on the 1932 construction plans, lateral canals were used to distribute water over the spreading grounds. These laterals branched off two primary canals, the East Canal and the West Canal. Together the canals helped distribute the flow of water and assist its absorption into the ground.

Since the original construction of the property, the Pacoima Spreading Grounds have undergone significant alterations. Beginning in the 1950s, the headworks were modified to improve efficiency of the system. Then, in the late 1980s, the facility underwent considerable alterations when modifications were made to the levees and excavations were undertaken to allow for deeper basins.

During the investigation, as-built drawings from 1932, 1953, and 1986 were examined to discern the extent of modifications made to the historic-period Pacoima Spreading Grounds. This examination indicated significant alterations to the facility including:

- Improvements/alterations to the headworks and associated gates
- Construction of Devonshire Street, bisecting the original spreading grounds
- Removal of several levees and diversion structures
- Excavations to increase the capacity of the spreading grounds by deepening the basins
- Installation of weir structures and removal of some existing timber and concrete drop structures
- Installation of modern catwalk, gratings, and handrails

According to historic aerial images, it appears that, while the Pacoima Spreading Grounds facility remains in generally the same location, the form and massing of the property have changed significantly since its original construction. An image from 1953 depicts the spreading grounds as a contiguous property with an irregular footprint, surrounded by agricultural lands and limited residential development. By the 1969 aerial image, the spreading grounds are bisected by the installation of Devonshire Street. Also that year, extensive residential development appears to have enveloped the subject property on all sides. According to the available images, the most dramatic change to the form of the property happened between 1982 and 2003. As confirmed through background research and noted above, in the late 1980s the layout of the subject property was dramatically reconfigured and modernized. Aerial photographs depict the spreading grounds shifting from a collection of approximately 25 relatively small collection basins to about 12 large individual reservoirs. Concrete overflow spillways and earthen levees were added to the subject property as part of the 1980s alterations (Historic Aerials 2013).

As a result of the gradual yet significant modifications described above, the exact percentage of the original 1930s spreading grounds built environment features that remain could not be determined. To analyze any remaining historic integrity or potential historical significance of the Pacoima Spreading Grounds, a formal evaluation of the subject property was undertaken. The results of the evaluation were summarized in the conclusions of this report and were recorded on the appropriate DPR 523 Series forms, included in Appendix A of this document.

SECTION 5.0 – DESCRIPTION OF HISTORICAL RESOURCES

The proposed Project site is located in an urbanized area and currently consists of a municipal facility used in water management by the San Fernando Valley. Immediately adjacent to the northwest side of the facility is the concrete-lined Pacoima Diversion Channel, which transports water into the Pacoima Spreading Grounds. The remaining sides of the subject property are filled with a combination of single and multi-family residences as well as roadways, including Arleta Avenue and Fillmore Street. Devonshire Street bisects the subject property and runs roughly east to west. Overhead street lights and non-historic-period signage line the surrounding streets.

Consistent with CEQA guidelines, a remote study was undertaken to identify historical resources within the area of potential effect and consider possible impacts that may alter any of the characteristics of a historic-period property that might qualify it for inclusion in the CRHR. As such, the Pacoima Spreading Grounds were formally evaluated for CRHR-eligibility (See Appendix A). According to records search results, the spreading grounds were not previously evaluated for potential significance. After close examination, it appears the subject property does not demonstrate a level of significance or appear to meet the criteria of eligibility for inclusion in the CRHR based on its current appearance and form. Therefore, it is determined that no historical resources are present within the area of potential effect (APE) for this Project.

The subject property consists of a series of 12 shallow basins used in water management to allow excess water capacity to more easily percolate down to the subsurface water table. Sources of the water include controlled flow from Pacoima Dam, partially controlled flow from the Lopez Flood Control Basin, uncontrolled flow from East Canyon and Pacoima Wash, and imported water. The basins of the approximately 107-acre property are fed water from the Pacoima Wash Channel, which has a design capacity of approximately 17,000 cfs.

Originally installed in the early 1930s, the spreading grounds have been significantly altered since initial construction. These alterations include deepening and reconfiguring the basins, improvements to the headworks and floodgates, and the removal of several levees and diversion structures.

SECTION 6.0 – FINDINGS AND CONCLUSIONS

The results of the cultural resources records search and background literature review for the Pacoima Spreading Grounds Improvement Project did not identify any previously recorded prehistoric or historic archaeological sites or historic buildings or structures within the Project area or within the half-mile radius of the study area.

Upon examination of the alterations to the spreading grounds, the historic integrity of the property appears to have been significantly undermined. According to the available records, including as-built drawings for the facility and its alterations, significant modifications to the spreading grounds have taken place since the 1930s that have affected the property's ability to convey a level of historical significance to warrant eligibility for listing to either the state or national registers. As a result, the subject property does not demonstrate a level of significance or appear to meet the criteria of eligibility for inclusion in the CRHR based on its current appearance and form. Due to the property's previous loss of integrity, the Pacoima Spreading Grounds Improvement Project is not anticipated to result in an impact to any historical resources.

As noted in the formal evaluation, included as Appendix A of this document, Chambers Group does not recommend the Pacoima Spreading Grounds as eligible for listing to the CRHR or the NRHP or for consideration as a historical resource for purposes of CEQA.

Despite these findings, it should be noted that, based upon the research methods detailed in this report, the absence of cultural resources within the Project area does not preclude the possible presence of undiscovered cultural resources which may lie subsurface. In the event cultural resources are discovered during the course of construction activities associated with this Project, a Cultural Resource Specialist who meets the *Secretary of the Interior Professional Qualifications Standards* (National Park Service 1983) should evaluate the potential significance of the materials under CEQA. If the discovery proves to be significant, additional work, such as data recovery excavation, may be warranted and should be discussed in consultation with the lead agency, the Los Angeles Department of Water and Power (LADWP).

SECTION 7.0 – REFERENCES

Historic Aerials

2013 NETR Online. Aerial Images: 1952, 1969, 1972, 1978, 1980, 1982, 2003. Accessed at http://www.historicaerials.com/.

Bean, Lowell John, and Charles R. Smith

1978 Gabrieliño. In *California*, edited by Robert F. Heizer, pp. 538-549. *Handbook of North American Indians*, vol. 8, William C. Sturtevant, general editor. Smithsonian Institution, Washington D.C.

Dumke, Glenn S.

1944 *The Boom of the Eighties in Southern California*. Huntington Library, San Marino, California.

Hanna, Paul T.

1951 *The Dictionary of California Land Names*. The Automobile Club of Southern California, Los Angeles.

Harrington, John P.

1962 Preface. In *California's Gabrieliño Indians*, edited by Bernice E. Johnson, pp. vii-viii. Fredrick Webb Hodge Anniversary Publication Fund 8. Southwest Museum, Los Angeles, California.

Johnston, Bernice E.

1962 *California's Gabrieliño Indians*. Southwest Museum, Los Angeles, California.

Kroeber, Alfred L.

1925 *Handbook of the Indians of California*. Smithsonian Institution, Bureau of American Ethnology Bulletin 78. Washington, D.C.

1953 *Handbook of the Indians of California*. California Book Company, Ltd., Berkeley, California.

Long and Holson

2010 Archaeological Survey and National Register of Historic Places and California Register of Historical Resources Evaluation of 07-H-002 and 07-H-003, Strawberry Contractor Yard, for the Southern California Edison Company Tehachapi Renewable Transmission Project Segment 7, Los Angeles County, California. Pacific Legacy, Inc., Berkeley, California.

Los Angeles Department of Power and Water (LADPW)

2013 *The Story of the Los Angeles Aqueduct*. Accessed at http://wsoweb.ladwp.com

McCawley, William

1996 *The First Angelinos. The Gabrieliño Indians of Los Angeles*. Malki Museum Press, Banning, California.

McWilliams, Carey
1973 *Southern California: An Island on the Land*. Peregrine Smith, Santa Barbara and Salt Lake City.

Scott, M.
1977 Development of Water Facilities in the Santa Ana River Basin, California, 1810-1968. U.S. Geological Survey Open File Report 77-398.

United States National Park Service (National Park Service)
1983 *Secretary of the Interior Professional Qualifications Standards*. United States Department of the Interior, Washington D.C.

SECTION 8.0 – PREPARER'S QUALIFICATIONS

Joel Levanetz, MA, Lead Architectural Historian

Mr. Levanetz is a Secretary of the Interior Professional Qualified Architectural Historian. During his eight years of experience, Mr. Levanetz has applied his knowledge and ability to a range of projects, including historic survey reports, historic resources assessments, Historic American Building Survey (HABS)/Historic American Engineering Record (HAER) documentation, and DPR 523 series form preparation.

Mr. Levanetz possesses a detailed understanding of relevant regulations and ordinances that affect historic properties, such as Sections 106 and 110 of National Historic Preservation Act (NHPA), the National Environmental Protection Act (NEPA), the California Environmental Quality Act (CEQA), and the Secretary of Interior Standards for the Treatment of Historic Properties. He has applied this understanding to a breadth of historic assessments and determinations of eligibility across a range of administrative levels including local, state, and National Register of Historic Places (NRHP). Among the agencies served by Mr. Levanetz are the Department of Defense (DOD), Federal Emergency Management Agency (FEMA), Bureau of Land Management (BLM), California Energy Commission (CEC), Federal Communications Commission (FCC), Federal Aviation Administration (FAA), Department of Housing and Urban Development (HUD), California Department of Transportation (Caltrans), as well as countless local agencies and private clients.

APPENDIX A – DPR 523 SERIES FORMS

State of California — The Resources Agency DEPARTMENT OF PARKS AND RECREATION **PRIMARY RECORD**	Primary # HRI # Trinomial NRHP Status Code	
Other Listings Review Code	Reviewer	Date

 ***Resource Name or #:** Pacoima Spreading Grounds

P1. Other Identifier: NA

***P2. Location:** ☐ **Not for Publication** ■ **Unrestricted** ***a. County:** Los Angeles

and (P2b and P2c or P2d. Attach a Location Map as necessary.)

***b. USGS 7.5' Quad:** San Fernando **Date:** 1997 **T** 2N;**R** 15W; **¼ of ¼ of Sec** 16**;** SB M.D. **B.M.**

c. Address: NA City: Los Angeles Zip: 91331

d. UTM: Zone: 11; 366691 mE/ 3791553 mN

e. Other Locational Data: (e.g., parcel #, directions to resource, elevation, etc., as appropriate) Elevation: 282 m (925 ft)

***P3a. Description:** (Describe resource and its major elements. Include design, materials, condition, alterations, size, setting, and boundaries)

The subject property consists of a series of 12 shallow basins used in water management to allow excess capacity to more easily percolate down to the subsurface water table. Sources of the water include controlled flows from the Pacoima Dam, partially controlled flow from the Lopez Flood Control Basin, uncontrolled flow from East Canyon and Pacoima Wash and imported water. The basins of the approximately 107 acre property are fed water from the Pacoima Wash Channel, which has a design capacity of approximately 17,000 cubic feet per second.

Originally installed in the early 1930s, the spreading grounds have been significantly altered since initial construction. These alterations include deepening and reconfiguring the basins, improvements to the headworks and floodgates, and the removal of several levees and diversion structures.

***P3b. Resource Attributes:** (List attributes and codes) NA

***P4. Resources Present:** ☐Building ■Structure ☐Object ☐Site ☐District ☐Element of District ☐Other (Isolates, etc.)

P5a. Photo or Drawing (Photo required for buildings, structures, and objects.)

P5b. Description of Photo: (View, date, accession #)
Looking south at subject property, May 9, 2013

***P6. Date Constructed/Age and Sources:** ■Historic ☐Prehistoric ☐Both
1931, As-Built Drawings

***P7. Owner and Address:**
County of Los Angeles
Department of Public Works

***P8. Recorded by:** (Name, affiliation, and address)
Joel Levanetz, MA
Chambers Group, Inc.
9909 Huennekens St.
San Diego, CA 92121

***P9. Date Recorded:**
October 17, 2013

***P10. Survey Type:** (Describe)
Remote Investigation

***P11. Report Citation:** (Cite survey report and other sources, or enter "none.")
Pacoima Spreading Grounds Improvement Project

***Attachments:** ☐NONE ☐Location Map ☐Sketch Map ■Continuation Sheet ■Building, Structure, and Object Record ☐Archaeological Record ☐District Record ☐Linear Feature Record ☐Milling Station Record ☐Rock Art Record ☐Artifact Record ☐Photograph Record ☐ Other (List):

BUILDING, STRUCTURE, AND OBJECT RECORD

*NRHP Status Code:

*Resource Name or # (Assigned by recorder) Pacoima Spreading Grounds

B1. Historic Name: Pacoima Spreading Grounds
B2. Common Name: Pacoima Spreading Grounds
B3. Original Use: Water Management
B4. Present Use: Water Management

*B5. Architectural Style: Utility

*B6. Construction History: (Construction date, alterations, and date of alterations)

The Pacoima Spreading Grounds were originally built in the early 1930s. Since this initial construction, the facility has undergone a number of significant alterations. Beginning in the 1950s, the headworks were modified to improve efficiency of the system. In the late 1980s, the facility underwent considerable alterations when modifications were made to the levees and excavations were undertaken to allow for deeper basins.

Refer to the accompanying Continuation Sheet for a detailed Construction History.

*B7. Moved? ■No ☐Yes ☐Unknown Date: NA Original Location: NA

*B8. Related Features:

The Pacoima Diversion Channel adjacent to the southeastern edge of the property.

B9a. Architect: Unknown
b. Builder: Unknown

*B10. Significance: Theme: NA
Area: NA
Period of Significance: NA
Property Type: Municipal
Applicable Criteria: NA

(Discuss importance in terms of historical or architectural context as defined by theme, period, and geographic scope. Also address integrity.)

The historical significance of the Pacoima Spreading Grounds was determined by applying the procedure and criteria for the California Register of Historical Resources (CRHR) as well as the National Register of Historic Places (NRHP).

Based on the remote investigation and historic research, the Pacoima Spreading Grounds facility does not appear to possess the requisite significance to be eligible for listing in either the CRHR or the NRHP and does not appear to be a historical resource for purposes of CEQA.

Refer to the accompanying Continuation Sheet for a detailed significance evaluation of the property.

B11. Additional Resource Attributes: (List attributes and codes)
NA

*B12. References:
Refer to Continuation Sheet

B13. Remarks:
NA

*B14. Evaluator: Joel Levanetz, MA

*Date of Evaluation: October 17, 2013

(This space reserved for official comments.)

(Sketch Map with north arrow required.)

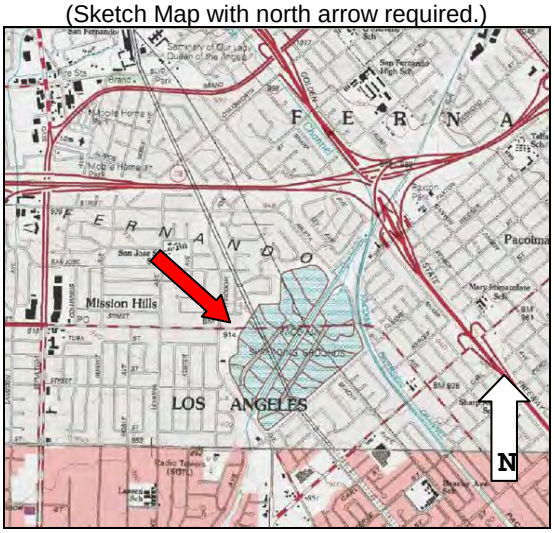

1995 San Fernando, 7.5 Minute Map, Not to Scale

***B6. Construction History (Continued):**

During the investigation, as-built drawings from 1932, 1953 and 1986 were examined to discern the extent of modifications made to the historic-period Pacoima Spreading Grounds. This examination indicated significant alterations to the facility including:

- Improvements/alterations to the headworks and associated gates
- Construction of Devonshire Street, bisecting the original spreading grounds
- Removal of several levees and diversion structures
- Excavations to increase the capacity of the spreading grounds by deepening the basins
- Installation of weir structures and removal of some existing timber and concrete drop structures
- Installation of modern catwalk, gratings, and handrails

***B10. Significance (Continued):**

The subject property was never previously evaluated for its historical significance for listing to the California Register of Historical Resources (CRHR) or the National Register of Historic Places (NRHP).

As a result of the current study, the property appears to be ineligible for listing to either the CRHR or the NRHP. Accordingly, after evaluating the project actions, it does not appear that the current undertaking will cause an impact or undermine the significance of any historic properties or impact historical resources for purposes of CEQA.

When constructed in the early 1930s, the Pacoima Spreading Grounds became an additional measure in a long history of water management strategies in the Los Angeles area. Throughout the 1800s the population swelled with settlers migrating to the region. By 1890, the population of Los Angeles County was recorded at 101,000. With consideration to this growing area, in 1892 President Benjamin Harrison established the Angeles National Forest. The 1.5 million acre preserve was created "primarily for the purpose of watershed protection and improvement of water flow conditions" (LADWP 2013).

Not long after, another significant water management development was implemented in response to the county's burgeoning population. In 1904, Superintendent of the Los Angeles City Water Company, William Mulholland, asserted that in order to sustain its residents, Los Angeles will require additional sources of water. Together with former mayor Frederick Eaton, Mulholland began developing a plan to transport water from Owens Valley to Los Angeles (LADWP 2013). After a contentious battle securing land and water rights, construction on the Los Angeles Aqueduct began in 1908. Just five years later, the project was completed and the 233-mile long aqueduct began delivering water from the Owens River in the Easter Sierra Mountains to Los Angeles.

However, concerns over water management did not end with the 1913 opening of the Los Angeles Aqueduct. In fact, the following year a dramatic flood caused catastrophic damage throughout the region and prompted the conversation about ways to manage the Los Angeles River. As such, in 1915 the Los Angeles Flood Control District was established with James A. Reagan leading the organization. Rather than take the advice of the County Board of Engineers to focus efforts on managing waters upstream to prevent flooding, Reagan pursued a program to channelize the Los Angeles River. Also under Reagan's management, the Devil's Gate Dam was constructed in 1920. This project represented the first dam built by the Los Angeles County Flood Control District, the agency that would ultimately become important divisions under the Department of Public Works.

In the 1930s, additional complications regarding water management in Los Angeles arose. Measurements indicated that groundwater levels, in some cases, were decreasing drastically. To simultaneously address flood risk and groundwater depletion, the Commission on Recreation and Parks and Beaches drafted a Comprehensive Plan that advised the purchase of lands in the flood plain to create, among other things, a series of settling grounds. The settling grounds would provide a facility to capture excess waters and absorb them in the subsurface aquifers (LADWP 2013).

***B10. Significance (Continued):**

Pacoima Spreading Grounds

Among the water management facilities created as a result of the 1930 Comprehensive Plan was the Pacoima Spreading Grounds. Operation of the spreading grounds began in 1932. As indicated above, the purpose of the facility was to control the flow of water from the canyons and storm water runoff as well as to recharge groundwater through the use of permeable basins. Currently, the source of water for the spreading grounds is controlled flow from Pacoima Dam, partially controlled flow from Lopez Flood Control Basin, uncontrolled flow from East Canyon and Pacoima Wash, and imported water.

Based on a review of the 1932 as-built drawings, lateral canals were originally used to distribute water over the spreading grounds. These laterals branched off two primary canals, the East Canal and West Canal. Together the canals helped distribute the flow of water and assist its absorption into the ground. However, since the initial construction of the property, the Pacoima Spreading Grounds have undergone significant alterations.

Beginning in the 1950s, the headworks were modified to improve efficiency of the system. Then, in the late 1980s, the facility underwent considerable alterations when modifications were made to the levees and excavations were executed to create deeper basins.

According to historic aerial images, it appears that, while the Pacoima Spreading Grounds remain in generally the same location, the form and massing of the property have changed significantly since the property's original construction. An image from 1953 depicts the spreading grounds as a contiguous property with an irregular footprint, surrounded by agricultural lands and limited residential development. By the 1969 aerial image, the spreading grounds are bisected by the installation of Devonshire Street. Also that year, extensive residential development appears to have enveloped the subject property on all sides. According to the available images, the most dramatic change to the form of the property happened between 1982 and 2003. As was confirmed through background research and noted above, in the late 1980s the layout of the subject property was dramatically reconfigured and modernized. Aerial photographs depict the spreading grounds shifting from a collection of approximately 25 relatively small collection basins to about 12 large individual reservoirs. Concrete overflow spillways and earthen levees were also added to the subject property as part of the 1980s alterations.

Upon review of the background literature and historical research, the Pacoima Spreading Grounds facility does not appear to meet the criteria of eligibility for inclusion to the CRHR or the NRHP and does not appear to be a historical resource for purposes of CEQA.

Criterion 1/A: Initial research indicated the property does not appear to be associated with significant events of the past. The Pacoima Spreading Grounds do not convey the importance of early water management strategies or the influence these strategies had in shaping the City of Los Angeles, the County of Los Angeles or the state of California.

Criterion 2/B: Historical research revealed that the property does not appear to be directly associated with the life and career of an individual who made important contributions to the history of the United States, California, or the Los Angeles region. Initial research failed to provide evidence establishing an association between persons of historical significance and the subject property.

***B10. Significance (Continued):**

Criterion 3/C: The Pacoima Spreading Grounds property is an example of a municipal facility that has been altered throughout the twentieth century. As such, it does not significantly embody the distinctive characteristics of a style, type or period of construction or engineering. Among the alterations that have significantly impacted the property are the 1950s modifications to the headworks and the 1980s reconfiguration of the levees and basins.

Criterion 4/D: Given the significant level of alterations to the subject property, it does not appear to have the potential to yield important information about the development of water management programs in the region.

Along with meeting one of the above criteria, in order for it to be eligible for listing in the national or state register, a property must also retain its historic integrity. The National Register of Historic Places recognizes a property's historic integrity through seven aspects or qualities. These include location, design, setting, materials, workmanship, feeling, and association. In order for a property to be eligible, it must retain some, if not most, of the aspects.

As defined by the Secretary of the Interior, location is the place where the historic-period property was constructed or the place where the historic event took place. Since the subject property has not been moved, it retains its integrity of location. However, no historic event was found to have taken place at the subject property. Design is defined as the composition of elements that constitute the form, plan, space, structure, and style of a property. The subject property has undergone numerous and significant changes since its original construction in the early 1930s. This includes non-historic period changes to the headgates as well as significant alterations to the basins and surrounding levees. Therefore, the property does not retain its integrity of design.

Setting is defined as the physical environment of a historic-period property that illustrates the character of the place. The property's setting has been heavily altered, changing from its original rural nature with surrounding open spaces to an urban character with moderate density housing. As a result, the property no longer retains its original historic appearance, visual narrative, or characteristics from the historic period. Therefore, the subject property does not retain its integrity of setting. Materials are defined as the physical elements combined in a particular pattern or configuration to form the aid during a period in the past. The property has been significantly altered with non-historic period additions and alterations. As such, the building no longer retains its integrity of materials.

Workmanship is defined as the physical evidence of the crafts of a particular culture or people during any given period of history. The property does not illustrate evidence of workmanship, and is not representative of a particular culture or people. Feeling is defined as the quality that a historic-period property has in evoking the aesthetic or historic sense of a past period of time. Given the property's significant loss of setting and design, the subject property does not retain its integrity of feeling. Association is defined as the direct link between a property and the event or person for which the property is significant. Research did not reveal an association between the property and persons or events significant to the past. Therefore, the subject property does not retain its integrity of association.

In conclusion, the property has lost its historic integrity of all aspects or qualities with the exception of location. However, the location of the Pacoima Spreading Grounds facility is not associated with a notable or recognized historic event. As a result, the subject property does not demonstrate a level of significance or appear to meet the criteria of eligibility for inclusion in the CRHR or the NRHP based on its current appearance and form. Due to the property's previous loss of integrity, the Pacoima Spreading Grounds Improvement Project is not anticipated to result in an impact to any historical resources or alter any of the characteristics of a historic-period property that qualify it for inclusion in the CRHR or NRHP. No historical resources are expected to be impacted as a result of the project.

*B10. Significance (Continued):

Looking southeast at Subject Property from Devonwood Park.

Looking west at the intake canal of the Subject Property.

***B10. Significance (Continued):**

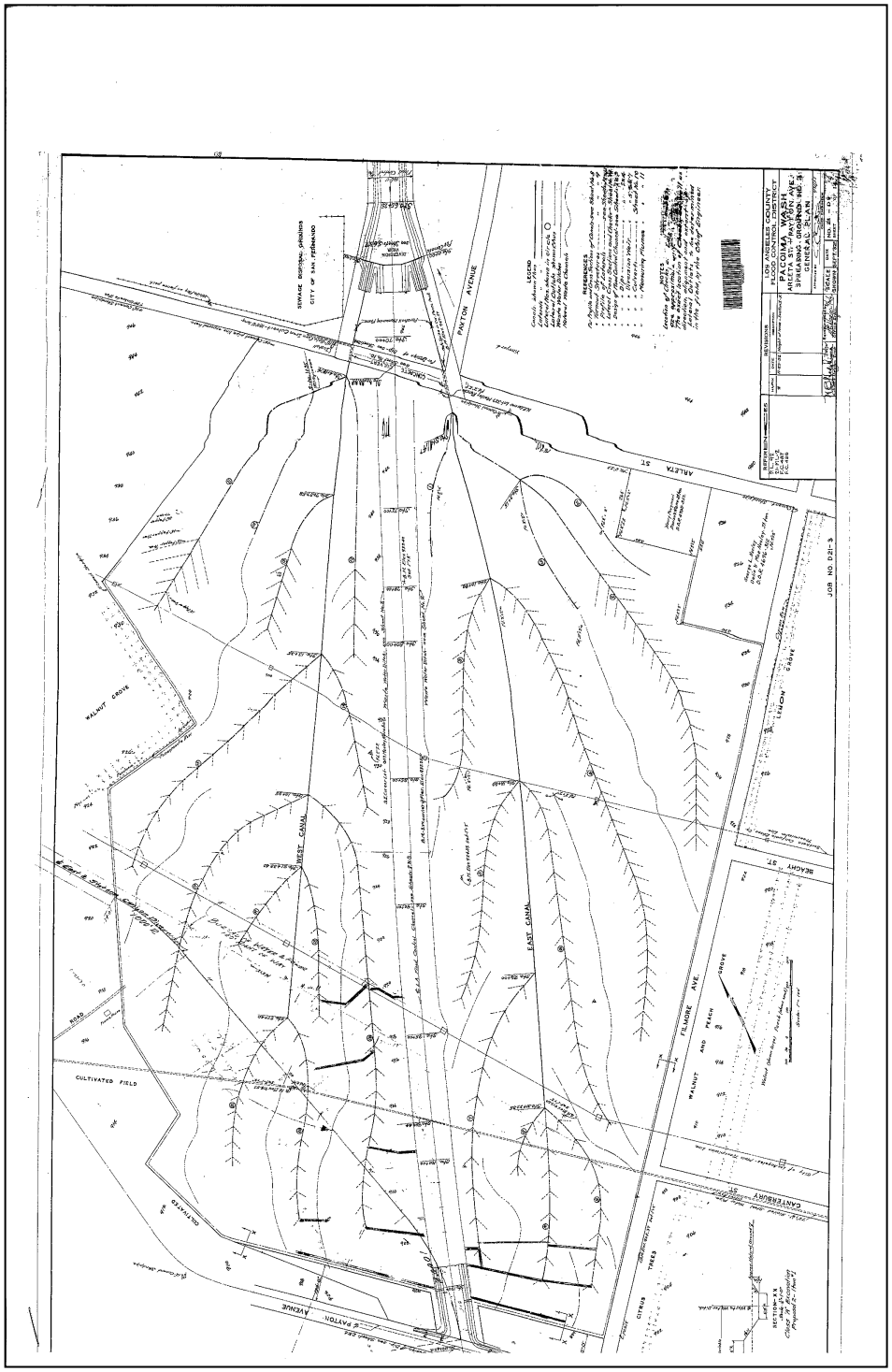

1932 As-Built Drawing of the Subject Property.

***B12. References:**

2013 Historic Aerials.com. Aerial Images: 1952, 1969, 1972, 1978, 1980, 1982, 2003. NETR Online.

2013 *The Story of the Los Angeles Aqueduct*. Los Angeles Department of Water and Power, Los Angeles, CA.

Bean, Lowell John, and Charles R. Smith
1978 Gabrieliño. In *California*, edited by Robert F. Heizer, pp. 538-549. *Handbook of North American Indians*, vol. 8, William C. Sturtevant, general editor. Smithsonian Institution, Washington D.C.

Dumke, Glenn S.
1944 The Boom of the Eighties in Southern California. Huntington Library, San Marino, California.

Hanna, Paul T.
1951 The Dictionary of California Land Names. The Automobile Club of Southern California, Los Angeles.

Harrington, John P.
1962 Preface. In *California's Gabrieliño Indians*, edited by Bernice E. Johnson, pp. vii-viii. Fredrick Webb Hodge Anniversary Publication Fund 8. Southwest Museum, Los Angeles.

Johnston, Bernice E.
1962 California's Gabrieliño Indians. Southwest Museum, Los Angeles, CA.

Kroeber, Alfred L.
1925 *Handbook of the Indians of California*. Smithsonian Institution, Bureau of American Ethnology Bulletin 78. Washington D.C.

1953 *Handbook of the Indians of California*. California Book Company, Ltd., Berkeley.

Long and Holson
2010 *Archaeological Survey and National Register of Historic Places and California Register of Historical Resources Evaluation of 07-H-002 and 07-H-003, Strawberry Contractor Yard, for the Southern California Edison Company Tehachapi Renewable Transmission Project Segment 7, Los Angeles County, California.* Pacific Legacy Inc. Berkeley, CA.

McCawley, William
1996 *The First Angelinos. The Gabrieliño Indians of Los Angeles*. Malki Museum Press, Banning.

McWilliams, Carey
1973 Southern California: An Island on the Land. Peregrine Smith, Santa Barbara and Salt Lake City.

Scott, M.
1977 Development of Water Facilities in the Santa Ana River Basin, California, 1810-1968. U.S. Geological Survey Open File Report 77-398.

APPENDIX B – CORRESPONDENCE

5 Hutton Centre Drive
Suite 750
Santa Ana, California 92707
949.261.5414
714.545.2255 (fax)

May 1, 2013

Mr. Dave Singleton
Associate Governmental Program Analyst
Native American Heritage Commission
915 Capitol Mall, Room 364
Sacramento, CA 95814

Subject: **Chambers Group Project Number 20600: Record Search Request for the Pacoima Spreading Grounds Improvement Project, Los Angeles County, California**

Dear Mr. Singleton:

Chambers Group is requesting a review of the Sacred Lands Inventory be conducted for a study of the proposed Pacoima Spreading Grounds Improvement Project, near the intersection of Paxton and Arleta Streets, in the City of Los Angeles, Los Angeles County, California. At present, the proposed project includes the reconfiguration of the Pacoima Spreading Ground basin to increase the storage capacity from 530 to 1,197 acre-feet while removing clay to increase percolation rates. The proposed improvements will simplify operations by combining basins and constructing new interbasin structures, in addition to replacing a radial gate with a rubber dam.

The project area falls within an unsectioned portion of the Rancho Ex-Mission San Fernando Mexican land grant. Attached for your review is the 7.5' USGS topographic map of the San Fernando quadrangle depicting the boundaries of the project area, specifically identifying the location of the spreading grounds and the location of where the radial gate will be replaced with a rubber dam.

We are also requesting a list of groups or representatives to contact regarding the proposed project.

Thank you for honoring this request. For correspondence, please use our project number 20600. If you have any questions regarding this request, please contact me at (949) 261-5414 xt. 7233, or our Cultural Resources Director, Dr. Wayne Bischoff at (949) 261-5414 xt. 7261.

Sincerely,

Clarence Bodmer
Staff Cultural Resources Specialist
CHAMBERS GROUP, INC.

Attachements:

- Project vicinity map
- 1:24,000 topographic map

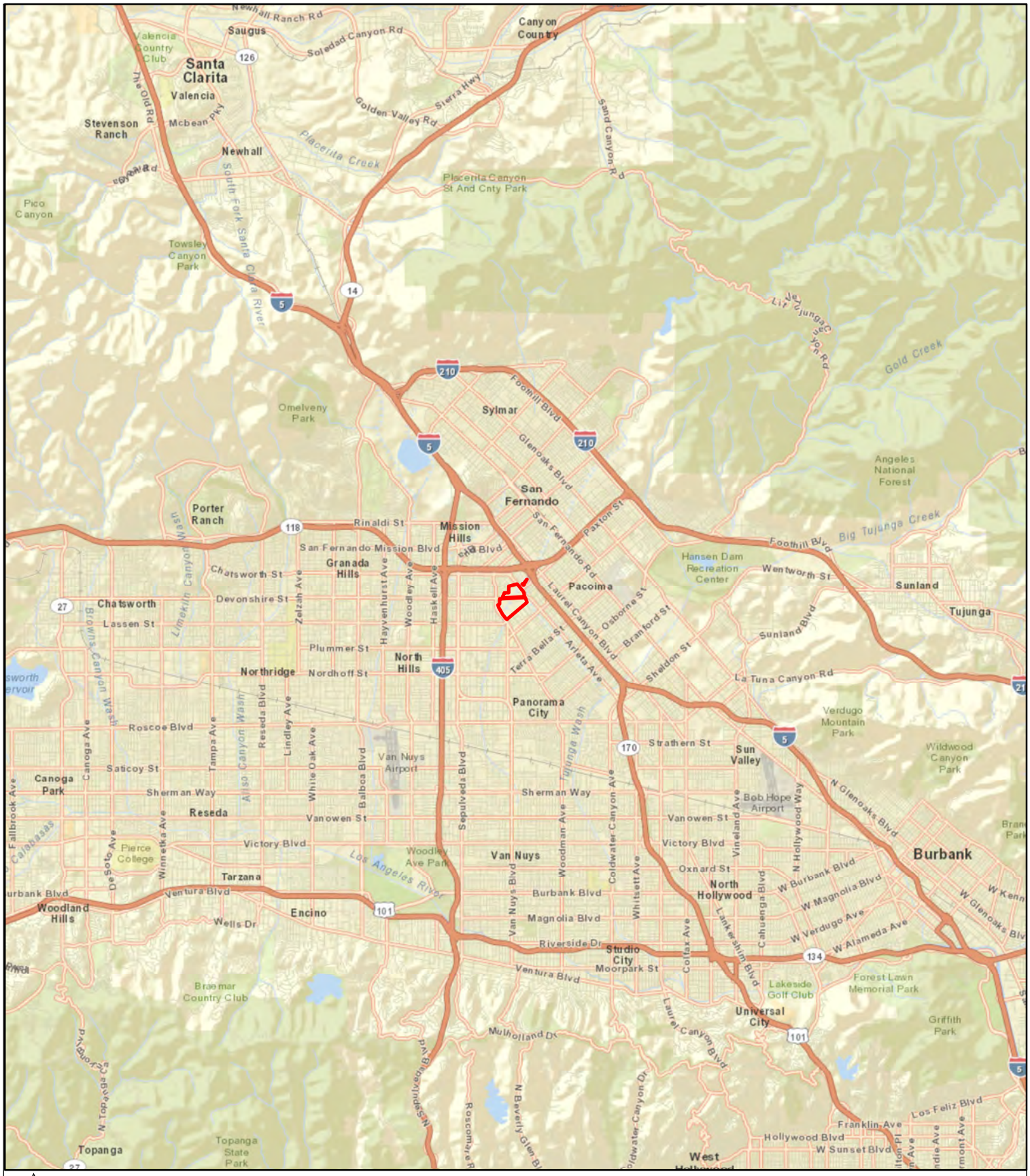

1:200,000

= Project Area

Pacoima Spreading Grounds Improvement Project
Project Area Vicinity Map

0 2 4 6 8 Miles

Service Layer Credits: Sources: Esri, DeLorme, NAVTEQ, USGS, Intermap, iPC, NRCAN, Esri Japan, METI, Esri China (Hong

CHAMBERS GROUP

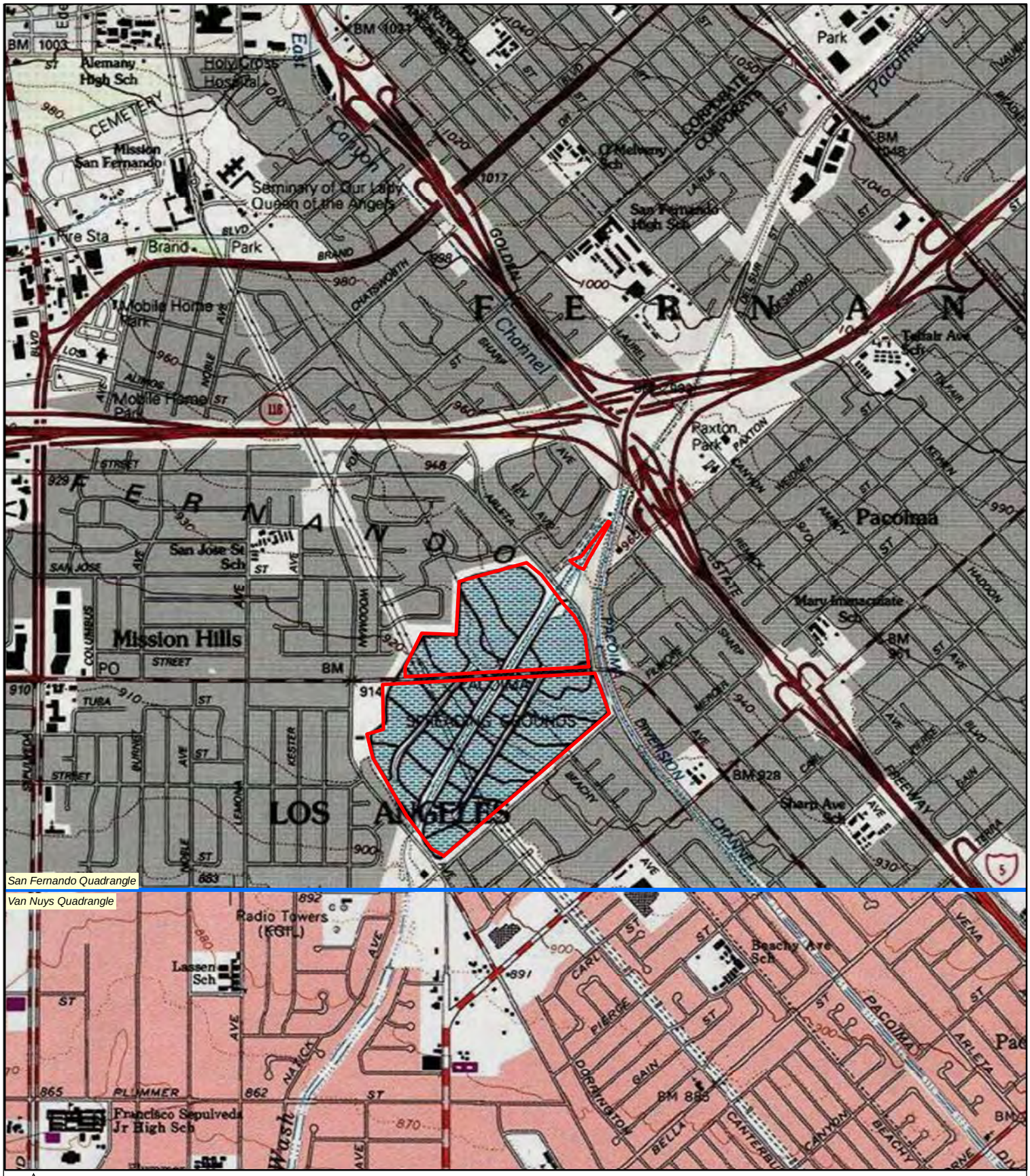

1:24,000

= Project Area

Pacoima Spreading Grounds Improvement Project
Project Area Location

0 0.25 0.5 0.75 1 Mile

USGS 7.5' San Fernando Quadrangle

Service Layer Credits: Copyright:© 2013 National Geographic Society, i-cubed

CHAMBERS GROUP

October 31, 2013

Beverly Salazar Folkes
1831 Shadybrook Drive
Thousand Oaks, CA 91363

SUBJECT: **CHAMBERS GROUP INC. PROJECT NUMBER #20600: PACOIMA SPREADING GROUNDS IMPROVEMENT PROJECT, CITY OF LOS ANGELES, LOS ANGELES COUNTY, CALIFORNIA**

Dear Ms. Folkes,

Chambers Group, Inc. has been retained by the County of Los Angeles Department of Public Works (LADPW) to provide a cultural resources study for the Pacoima Spreading Grounds Project located near the intersection of Paxton and Arleta Streets, on the west side of the Pacoima Diversion Channel, in the City of Los Angeles. The facility is one of the major water conservation facilities that recharge the San Fernando Basin, consisting of 12 large shallow basins with a storage capacity of 530 acre-feet (AF). The proposed project will increase the storage capacity and simplify operations by combining basins and constructing new interbasin structures. The project will also optimize the recharge capacity of the spreading grounds by modernizing and automating the existing intake structures while improving the spreading basins to increase retention capacity.

The project area lies within an un-sectioned portion of the Rancho Ex-Mission San Fernando Mexican land grant on the San Fernando USGS 7.5' quadrangle. The project area falls within the existing boundaries of the Spreading Grounds basin. An accompanying topographic map (1:24,000 scale) shows the exact location of the project area.

The California Environmental Quality Act (CEQA) calls for background research and an inventory of properties to evaluate if cultural resources will be impacted by the proposed undertaking. A record search of the NAHC Sacred Lands File prior to this letter failed to indicate the presence of any cultural resources. At this time, we request your assistance in identifying any cultural sites or areas of cultural significance that could be affected by the proposed project. If there are sensitive resources in or near the proposed project location that could be impacted by construction activities, or if you have any questions or concerns regarding the proposed project, please feel free to contact me directly.

For correspondence, please use our project number 20600. If you have any questions regarding this request, please contact me at (949) 261-5414 ext. 7507.

Sincerely,

Wayne Bischoff

CHAMBERS GROUP, INC.

Wayne Bischoff, PhD.
Director of Cultural Resources

Enclosures: Project Location Map

October 31, 2013

Kitanemuk & Yowtumne Tejon Indians
Delia Dominguez, Chairperson
115 Radio Street
Bakersfield, CA 93305

SUBJECT: **CHAMBERS GROUP INC. PROJECT NUMBER #20600: PACOIMA SPREADING GROUNDS IMPROVEMENT PROJECT, CITY OF LOS ANGELES, LOS ANGELES COUNTY, CALIFORNIA**

Dear Chairperson Dominguez,

Chambers Group, Inc. has been retained by the County of Los Angeles Department of Public Works (LADPW) Chambers Group, Inc. has been retained by the County of Los Angeles Department of Public Works (LADPW) to provide a cultural resources study for the Pacoima Spreading Grounds Project located near the intersection of Paxton and Arleta Streets, on the west side of the Pacoima Diversion Channel, in the City of Los Angeles. The facility is one of the major water conservation facilities that recharge the San Fernando Basin, consisting of 12 large shallow basins with a storage capacity of 530 acre-feet (AF). The proposed project will increase the storage capacity and simplify operations by combining basins and constructing new interbasin structures. The project will also optimize the recharge capacity of the spreading grounds by modernizing and automating the existing intake structures while improving the spreading basins to increase retention capacity.

The project area lies within an un-sectioned portion of the Rancho Ex-Mission San Fernando Mexican land grant on the San Fernando USGS 7.5' quadrangle. The project area falls within the existing boundaries of the Spreading Grounds basin. An accompanying topographic map (1:24,000 scale) shows the exact location of the project area.

The California Environmental Quality Act (CEQA) calls for background research and an inventory of properties to evaluate if cultural resources will be impacted by the proposed undertaking. A record search of the NAHC Sacred Lands File prior to this letter failed to indicate the presence of any cultural resources. At this time, we request your assistance in identifying any cultural sites or areas of cultural significance that could be affected by the proposed project. If there are sensitive resources in or near the proposed project location that could be impacted by construction activities, or if you have any questions or concerns regarding the proposed project, please feel free to contact me directly.

For correspondence, please use our project number 20600. If you have any questions regarding this request, please contact me at (949) 261-5414 ext. 7507.

Sincerely,

Wayne Bischoff

CHAMBERS GROUP, INC.

Wayne Bischoff, PhD.
Director of Cultural Resources
Enclosures: Project Location Map

October 31, 2013

Randy Guzman-Folkes
6471 Cornell Circle
Moorpark, CA 93021

SUBJECT: **CHAMBERS GROUP INC. PROJECT NUMBER #20600: PACOIMA SPREADING GROUNDS IMPROVEMENT PROJECT, CITY OF LOS ANGELES, LOS ANGELES COUNTY, CALIFORNIA**

Dear Mr. Guzman -Folkes,

Chambers Group, Inc. has been retained by the County of Los Angeles Department of Public Works (LADPW) to provide a cultural resources study for the Pacoima Spreading Grounds Project located near the intersection of Paxton and Arleta Streets, on the west side of the Pacoima Diversion Channel, in the City of Los Angeles. The facility is one of the major water conservation facilities that recharge the San Fernando Basin, consisting of 12 large shallow basins with a storage capacity of 530 acre-feet (AF). The proposed project will increase the storage capacity and simplify operations by combining basins and constructing new interbasin structures. The project will also optimize the recharge capacity of the spreading grounds by modernizing and automating the existing intake structures while improving the spreading basins to increase retention capacity.

The project area lies within an un-sectioned portion of the Rancho Ex-Mission San Fernando Mexican land grant on the San Fernando USGS 7.5' quadrangle. The project area falls within the existing boundaries of the Spreading Grounds basin. An accompanying topographic map (1:24,000 scale) shows the exact location of the project area.

The California Environmental Quality Act (CEQA) calls for background research and an inventory of properties to evaluate if cultural resources will be impacted by the proposed undertaking. A record search of the NAHC Sacred Lands File prior to this letter failed to indicate the presence of any cultural resources. At this time, we request your assistance in identifying any cultural sites or areas of cultural significance that could be affected by the proposed project. If there are sensitive resources in or near the proposed project location that could be impacted by construction activities, or if you have any questions or concerns regarding the proposed project, please feel free to contact me directly.

For correspondence, please use our project number 20600. If you have any questions regarding this request, please contact me at (949) 261-5414 ext. 7507.

Sincerely,

Wayne Bischoff

CHAMBERS GROUP, INC.

Wayne Bischoff, PhD.
Director of Cultural Resources

Enclosures: Project Location Map

October 31, 2013

San Fernando Band of Mission Indians
John Valenzuela, Chairperson
P.O. Box 221838
Newhall, CA 91322

SUBJECT: **CHAMBERS GROUP INC. PROJECT NUMBER #20600: PACOIMA SPREADING GROUNDS IMPROVEMENT PROJECT, CITY OF LOS ANGELES, LOS ANGELES COUNTY, CALIFORNIA**

Dear Chairperson Valenzuela,

Chambers Group, Inc. has been retained by the County of Los Angeles Department of Public Works (LADPW) to provide a cultural resources study for the Pacoima Spreading Grounds Project located near the intersection of Paxton and Arleta Streets, on the west side of the Pacoima Diversion Channel, in the City of Los Angeles. The facility is one of the major water conservation facilities that recharge the San Fernando Basin, consisting of 12 large shallow basins with a storage capacity of 530 acre-feet (AF). The proposed project will increase the storage capacity and simplify operations by combining basins and constructing new interbasin structures. The project will also optimize the recharge capacity of the spreading grounds by modernizing and automating the existing intake structures while improving the spreading basins to increase retention capacity.

The project area lies within an un-sectioned portion of the Rancho Ex-Mission San Fernando Mexican land grant on the San Fernando USGS 7.5' quadrangle. The project area falls within the existing boundaries of the Spreading Grounds basin. An accompanying topographic map (1:24,000 scale) shows the exact location of the project area.

The California Environmental Quality Act (CEQA) calls for background research and an inventory of properties to evaluate if cultural resources will be impacted by the proposed undertaking. A record search of the NAHC Sacred Lands File prior to this letter failed to indicate the presence of any cultural resources. At this time, we request your assistance in identifying any cultural sites or areas of cultural significance that could be affected by the proposed project. If there are sensitive resources in or near the proposed project location that could be impacted by construction activities, or if you have any questions or concerns regarding the proposed project, please feel free to contact me directly.

For correspondence, please use our project number 20600. If you have any questions regarding this request, please contact me at (949) 261-5414 ext. 7507.

Sincerely,

CHAMBERS GROUP, INC.

Wayne Bischoff, PhD.
Director of Cultural Resources

Enclosures: Project Location Map

October 31, 2013

LA City/County Native American Indian Commission
Ron Andrade, Director
3175 West 6th Street, Rm. 403
Los Angeles, CA 90020

SUBJECT: **CHAMBERS GROUP INC. PROJECT NUMBER #20600: PACOIMA SPREADING GROUNDS IMPROVEMENT PROJECT, CITY OF LOS ANGELES, LOS ANGELES COUNTY, CALIFORNIA**

Dear Director Andrade,

Chambers Group, Inc. has been retained by the County of Los Angeles Department of Public Works (LADPW) to provide a cultural resources study for the Pacoima Spreading Grounds Project located near the intersection of Paxton and Arleta Streets, on the west side of the Pacoima Diversion Channel, in the City of Los Angeles. The facility is one of the major water conservation facilities that recharge the San Fernando Basin, consisting of 12 large shallow basins with a storage capacity of 530 acre-feet (AF). The proposed project will increase the storage capacity and simplify operations by combining basins and constructing new interbasin structures. The project will also optimize the recharge capacity of the spreading grounds by modernizing and automating the existing intake structures while improving the spreading basins to increase retention capacity.

The project area lies within an un-sectioned portion of the Rancho Ex-Mission San Fernando Mexican land grant on the San Fernando USGS 7.5' quadrangle. The project area falls within the existing boundaries of the Spreading Grounds basin. An accompanying topographic map (1:24,000 scale) shows the exact location of the project area.

The California Environmental Quality Act (CEQA) calls for background research and an inventory of properties to evaluate if cultural resources will be impacted by the proposed undertaking. A record search of the NAHC Sacred Lands File prior to this letter failed to indicate the presence of any cultural resources. At this time, we request your assistance in identifying any cultural sites or areas of cultural significance that could be affected by the proposed project. If there are sensitive resources in or near the proposed project location that could be impacted by construction activities, or if you have any questions or concerns regarding the proposed project, please feel free to contact me directly.

For correspondence, please use our project number 20600. If you have any questions regarding this request, please contact me at (949) 261-5414 ext. 7507.

Sincerely,

Wayne Bischoff

CHAMBERS GROUP, INC.

Wayne Bischoff, PhD.
Director of Cultural Resources

Enclosures: Project Location Map

October 31, 2013

Fernandeno Tataviam Band of Mission Indians
Ronnie Salas, Cultural Preservation Department
1019 2nd Street, Suite #1
San Fernando, CA 91340

SUBJECT: **CHAMBERS GROUP INC. PROJECT NUMBER #20600: PACOIMA SPREADING GROUNDS IMPROVEMENT PROJECT, CITY OF LOS ANGELES, LOS ANGELES COUNTY, CALIFORNIA**

Dear Mr. Salas,

Chambers Group, Inc. has been retained by the County of Los Angeles Department of Public Works (LADPW) to provide a cultural resources study for the Pacoima Spreading Grounds Project located near the intersection of Paxton and Arleta Streets, on the west side of the Pacoima Diversion Channel, in the City of Los Angeles. The facility is one of the major water conservation facilities that recharge the San Fernando Basin, consisting of 12 large shallow basins with a storage capacity of 530 acre-feet (AF). The proposed project will increase the storage capacity and simplify operations by combining basins and constructing new interbasin structures. The project will also optimize the recharge capacity of the spreading grounds by modernizing and automating the existing intake structures while improving the spreading basins to increase retention capacity.

The project area lies within an un-sectioned portion of the Rancho Ex-Mission San Fernando Mexican land grant on the San Fernando USGS 7.5' quadrangle. The project area falls within the existing boundaries of the Spreading Grounds basin. An accompanying topographic map (1:24,000 scale) shows the exact location of the project area.

The California Environmental Quality Act (CEQA) calls for background research and an inventory of properties to evaluate if cultural resources will be impacted by the proposed undertaking. A record search of the NAHC Sacred Lands File prior to this letter failed to indicate the presence of any cultural resources. At this time, we request your assistance in identifying any cultural sites or areas of cultural significance that could be affected by the proposed project. If there are sensitive resources in or near the proposed project location that could be impacted by construction activities, or if you have any questions or concerns regarding the proposed project, please feel free to contact me directly.

For correspondence, please use our project number 20600. If you have any questions regarding this request, please contact me at (949) 261-5414 ext. 7507.

Sincerely,

Wayne Bischoff

CHAMBERS GROUP, INC.

Wayne Bischoff, PhD.
Director of Cultural Resources

Enclosures: Project Location Map

October 31, 2013

Tongva Ancestral Territorial Tribal Nation
John Tommy Rosas, Tribal Administrator
tattnlaw@gmail.com

SUBJECT: **CHAMBERS GROUP INC. PROJECT NUMBER #20600: PACOIMA SPREADING GROUNDS IMPROVEMENT PROJECT, CITY OF LOS ANGELES, LOS ANGELES COUNTY, CALIFORNIA**

Dear Administrator Rosas,

Chambers Group, Inc. has been retained by the County of Los Angeles Department of Public Works (LADPW) to provide a cultural resources study for the Pacoima Spreading Grounds Project located near the intersection of Paxton and Arleta Streets, on the west side of the Pacoima Diversion Channel, in the City of Los Angeles. The facility is one of the major water conservation facilities that recharge the San Fernando Basin, consisting of 12 large shallow basins with a storage capacity of 530 acre-feet (AF). The proposed project will increase the storage capacity and simplify operations by combining basins and constructing new interbasin structures. The project will also optimize the recharge capacity of the spreading grounds by modernizing and automating the existing intake structures while improving the spreading basins to increase retention capacity.

The project area lies within an un-sectioned portion of the Rancho Ex-Mission San Fernando Mexican land grant on the San Fernando USGS 7.5' quadrangle. The project area falls within the existing boundaries of the Spreading Grounds basin. An accompanying topographic map (1:24,000 scale) shows the exact location of the project area.

The California Environmental Quality Act (CEQA) calls for background research and an inventory of properties to evaluate if cultural resources will be impacted by the proposed undertaking. A record search of the NAHC Sacred Lands File prior to this letter failed to indicate the presence of any cultural resources. At this time, we request your assistance in identifying any cultural sites or areas of cultural significance that could be affected by the proposed project. If there are sensitive resources in or near the proposed project location that could be impacted by construction activities, or if you have any questions or concerns regarding the proposed project, please feel free to contact me directly.

For correspondence, please use our project number 20600. If you have any questions regarding this request, please contact me at (949) 261-5414 ext. 7507.

Sincerely,

Wayne Bischoff

CHAMBERS GROUP, INC.

Wayne Bischoff, PhD.
Director of Cultural Resources

Enclosures: Project Location Map

APPENDIX C – BACKGROUND AND RESEARCH MATERIALS

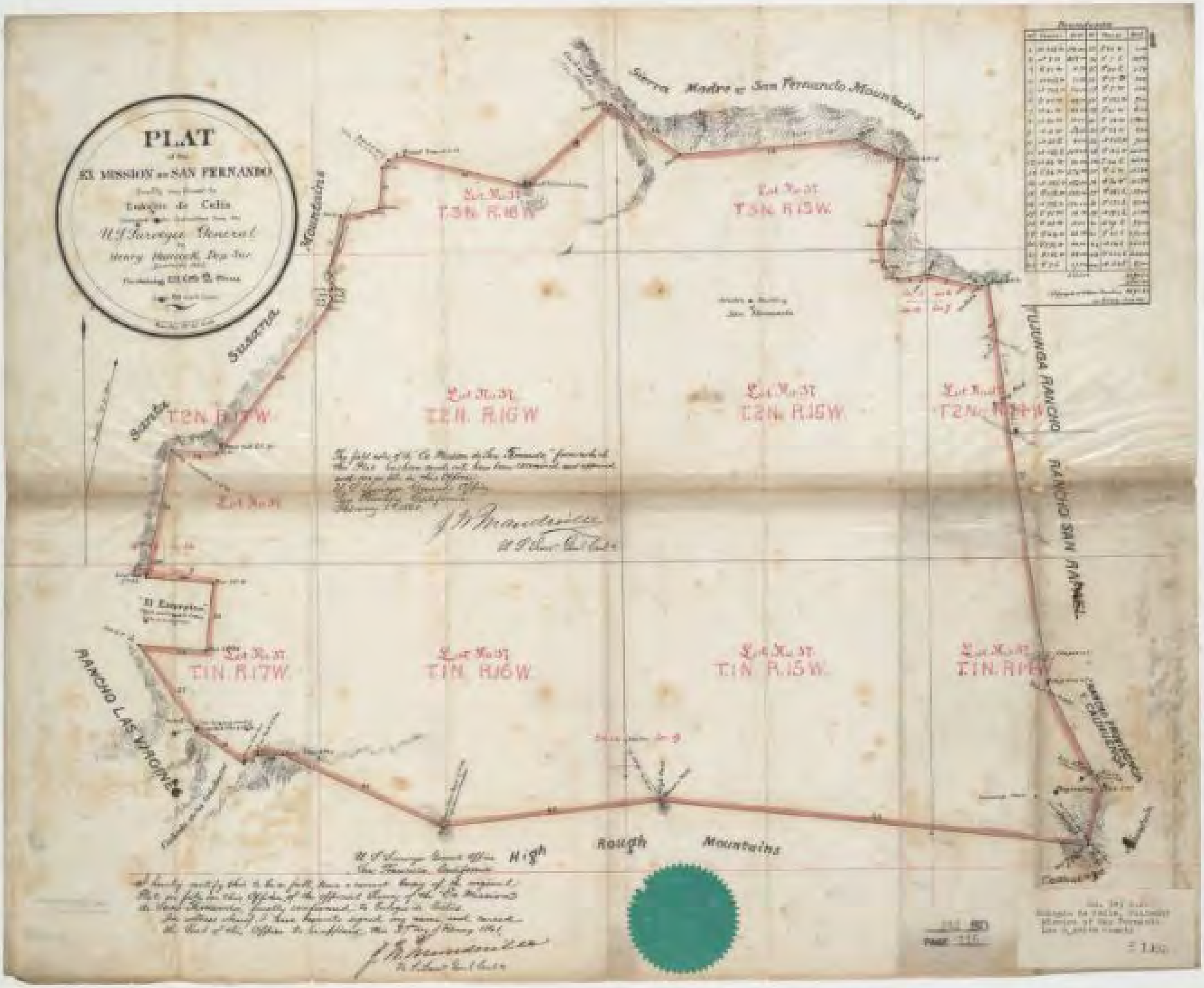
PLAT
of the
RL. MISSION de SAN FERNANDO
Sierra Madre or San Fernando Mountains
Sierra
Mountains
T.3N. R.16W.
T.3N. R.15W.
T.2N. R.17W.
T.2N. R.16W.
T.2N. R.15W.
T.2N. R.14W.
T.1N. R.17W.
T.1N. R.16W.
T.1N. R.15W.
T.1N. R.14W.
RANCHO LAS VIRGENES
RANCHO SAN RAFAEL
High
Rough
Mountains

S-3.. THE MONTE VISTA VALLEY AND BIG TUJUNGA WASH.
SUNLAND, CAL.
LAMSON, PHOTO

SPENCE

A N G E L E S
Canyon
Soledad
RIVER
CLARA
Pacoima
LOPEZ FLOOD-
CONTROL-BASIN
PACOIMA
DAM
Little Tujunga Can.
Big Tujun
San Fernando
Res.
Wash
Wash
HANSEN FLOOD-
CONTROL BASIN
TUJUNGA
Pacoima
Tujunga
Burbank
La Tuna Can.
SUNSET DAM
Chatsworth
Res.
Brown
Creek
Limekiln Cr.
West Br.
Alise Cr.
Bull Creek
SEPULVEDA
FLOOD-CONTROL
BASIN
LOS
ANGELES
RIVER
Western
Burbank Blvd.
N. Fork
Bell Cr.
S. Fork
Calabasas
Arroyo
Hollywood
Lake
Franklin
Canyon
Laurel Cr.
Benedict
Sepulveda
Mandeville
Rustic

U.S. GEOLOGICAL SURVEY
CHARLES D. WALCOTT,
DIRECTOR

TOPOGRAPHY

CALIFORNIA
(LOS ANGELES CO.)
FERNANDO QUADRANGLE

ENGRAVED JAN. 1900 BY U.S.G.S.

R.U. Goode Geographer in charge.
Triangulation by S.S. Gannett.
Topography by T.G. Gerdine and L.C. Fletcher.
Surveyed in 1897.

Gerdine
Fletcher

Scale $\frac{1}{62500}$

1 ½ 0 1 2 3 4 Miles

1 ½ 0 1 2 3 4 5 Kilometers

Contour interval 50 feet.

Datum is mean sea level.

Edition of Sept. 1900 reprinted June 1905.

USGS Historical Topographic Division File

FILE COPY
Ed. Div. Topographic Maps.

U.S. Geological Survey,
JUL 20 1905 2185
Ed. Div. Topographic Maps.

Fernando, CALIF.

UNITED STATES
DEPARTMENT OF THE INTERIOR
GEOLOGICAL SURVEY

LOS ANGELES COUNTY
REPRESENTED BY THE
BOARD OF SUPERVISORS

SAN FERNANDO QUADRANGLE

CALIFORNIA-LOS ANGELES CO.
7.5 MINUTE SERIES (TOPOGRAPHIC)
SW/4 SAN FERNANDO 15' QUADRANGLE

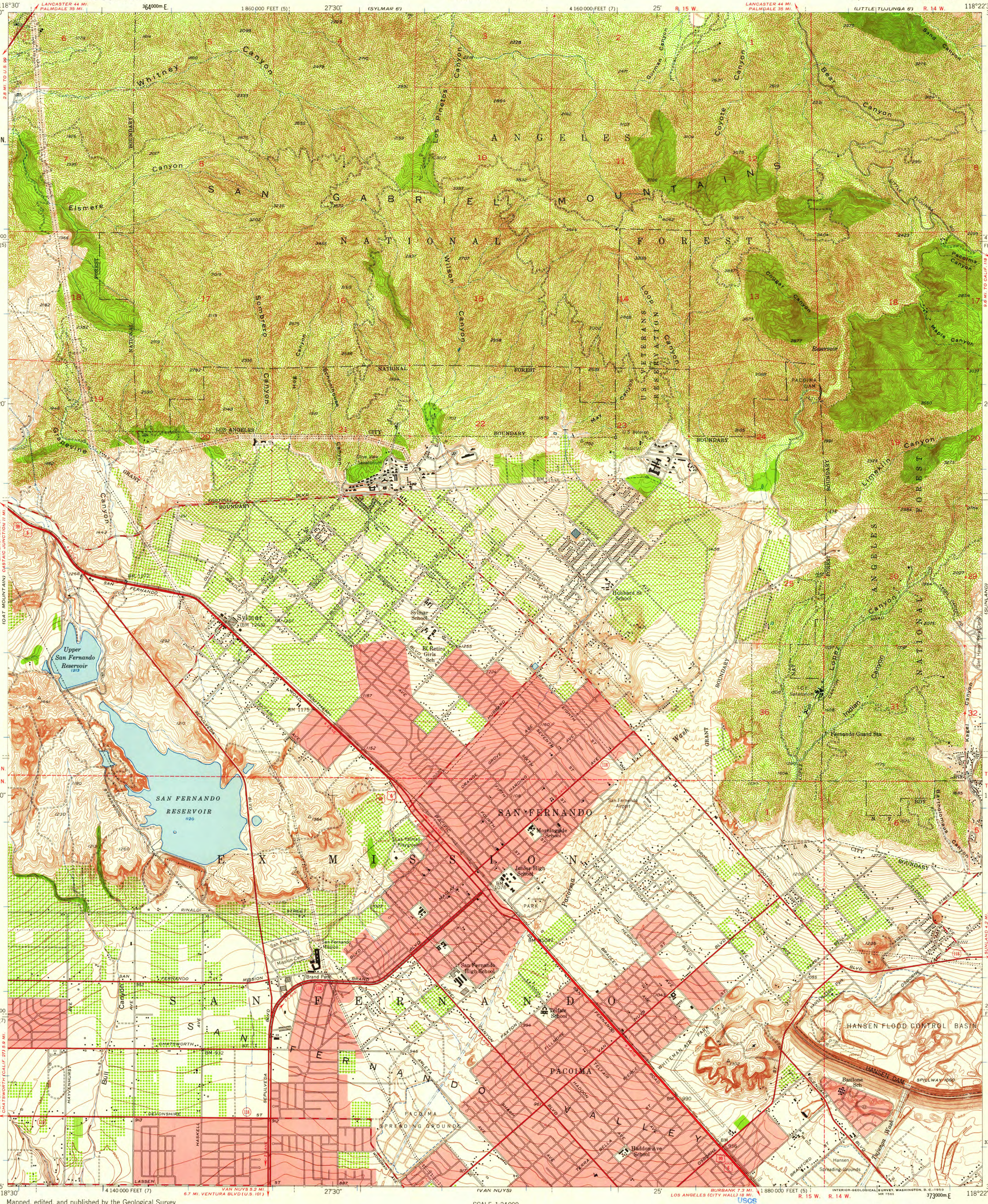

Mapped, edited, and published by the Geological Survey

Control by USGS, USC&GS, and Los Angeles Co.

Topography by plane-table surveys 1924–34
Culture revised from aerial photographs taken 1952
Field check 1952–53

Polyconic projection. 1927 North American datum
10,000-foot grids based on California coordinate system, zones 5 and 7

Red tint indicates area in which only landmark buildings are shown

Dashed land lines indicate approximate locations

1000-meter Universal Transverse Mercator grid ticks, zone 11, shown in blue

TRUE NORTH
MAGNETIC NORTH
15½°
APPROXIMATE MEAN DECLINATION, 1953

SCALE 1:24 000

1 ½ 0 1 MILE

1000 0 1000 2000 3000 4000 5000 6000 7000 FEET

1 .5 0 1 KILOMETER

CONTOUR INTERVAL 5 AND 25 FEET
DATUM IS MEAN SEA LEVEL

25 foot Contours
5

CALIF
QUADRANGLE LOCATION

ROAD CLASSIFICATION

Heavy-duty — 4 LANE | 6 LANE — Light-duty
Medium-duty — 4 LANE | 6 LANE — Unimproved dirt
U. S. Route — State Route

SAN FERNANDO, CALIF.
SW/4 SAN FERNANDO 15' QUADRANGLE
N3415—W11822.5/7.5

1953

USGS
Historical File
Topographic Division

U.S.G.S.
FILE COPY
TOPOGRAPHIC DIVISION

AUG - 7 1959

6120

FOR SALE BY U. S. GEOLOGICAL SURVEY, DENVER 25, COLORADO OR WASHINGTON 25, D. C.
A FOLDER DESCRIBING TOPOGRAPHIC MAPS AND SYMBOLS IS AVAILABLE ON REQUEST

UNITED STATES
DEPARTMENT OF THE INTERIOR
GEOLOGICAL SURVEY

STATE OF CALIFORNIA
DEPARTMENT OF WATER RESOURCES

SAN FERNANDO QUADRANGLE
CALIFORNIA–LOS ANGELES CO.
7.5 MINUTE SERIES (TOPOGRAPHIC)
SW/4 SAN FERNANDO 15' QUADRANGLE

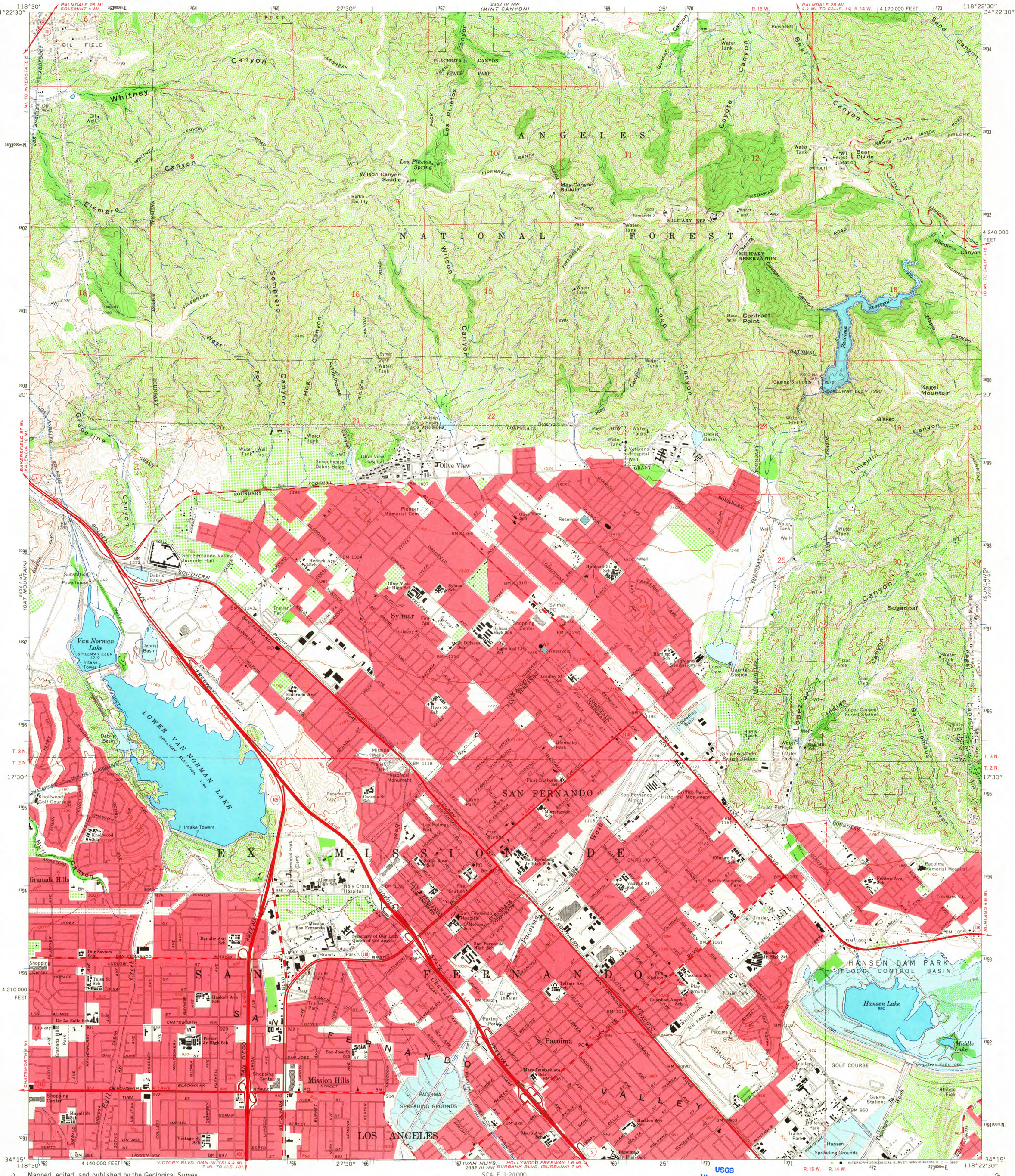

Mapped, edited, and published by the Geological Survey

Control by USGS, USC&GS, and Los Angeles Co.

Topography by photogrammetric methods from aerial photographs dated 1964. Field checked 1966
Supersedes map surveyed 1934, revised 1953

Polyconic projection. 1927 North American datum
10,000-foot grid based on California coordinate system, zone 7
1000-meter Universal Transverse Mercator grid ticks, zone 11, shown in blue

Red tint indicates areas in which only landmark buildings are shown

Where omitted, land lines have not been established

Areas covered by dashed light-blue pattern are subject to controlled inundation

UTM GRID AND 1966 MAGNETIC NORTH DECLINATION AT CENTER OF SHEET

SCALE 1:24 000

CONTOUR INTERVAL 40 FEET
DOTTED LINES REPRESENT 10-FOOT CONTOURS
DATUM IS MEAN SEA LEVEL

THIS MAP COMPLIES WITH NATIONAL MAP ACCURACY STANDARDS
FOR SALE BY U. S. GEOLOGICAL SURVEY, DENVER, COLORADO 80225, OR WASHINGTON, D. C. 20242
A FOLDER DESCRIBING TOPOGRAPHIC MAPS AND SYMBOLS IS AVAILABLE ON REQUEST

USGS
Historical File
Topographic Division

U.S.G.S.
FILE COPY
TOPOGRAPHIC DIVISION

QUADRANGLE LOCATION

ROAD CLASSIFICATION
Heavy-duty — Light-duty
Medium-duty — Unimproved dirt
Interstate Route — State Route

8040

SAN FERNANDO, CALIF.
SW/4 SAN FERNANDO 15' QUADRANGLE
N3415—W11822.5/7.5

1966

AMS 2352 IV SW—SERIES V895

FEB 20 1968

UNITED STATES
DEPARTMENT OF THE INTERIOR
GEOLOGICAL SURVEY

UNITED STATES
DEPARTMENT OF THE ARMY
CORPS OF ENGINEERS

SAN FERNANDO QUADRANGLE

CALIFORNIA—LOS ANGELES CO.
15 MINUTE SERIES (TOPOGRAPHIC)

Mapped by the Geological Survey
Revised by the Army Map Service
Published for civil use by the Geological Survey

Control by USGS

Topography by plane-table methods 1897

Planimetric detail revised from aerial photographs taken 1938–1940

Polyconic projection. 1927 North American datum
10,000-foot grid based on California coordinate system, zone 5

Dashed land lines indicate approximate location

No distinction is made between dwellings, barns, commercial and industrial buildings

TRUE NORTH
MAGNETIC NORTH
16°
APPROXIMATE MEAN DECLINATION, 1940

SCALE 1:62 500

1 ½ 0 1 2 3 4 MILES

3000 0 3000 6000 9000 12000 15000 18000 21000 FEET

1 .5 0 1 2 3 4 5 KILOMETERS

CONTOUR INTERVAL 50 FEET
DATUM IS MEAN SEA LEVEL

FOR SALE BY U. S. GEOLOGICAL SURVEY, FEDERAL CENTER, DENVER, COLORADO OR WASHINGTON 25, D. C.
A FOLDER DESCRIBING TOPOGRAPHIC MAPS AND SYMBOLS IS AVAILABLE ON REQUEST

USGS
Historical File
Topographic Division

QUADRANGLE LOCATION

INTERIOR—GEOLOGICAL SURVEY, WASHINGTON, D.C.—1955

ROAD CLASSIFICATION 1944

Heavy-duty — 4 LANE | 6 LANE
Medium-duty — 4 LANE | 6 LANE
Light-duty
Unimproved dirt
U. S. Route
State Route

This area is also covered by 1:24,000 scale maps of the Humphreys 1942, Lang 1929, Ravenna 1948, Sylmar 1942, Little Tujunga 1934, Trail Canyon 1948, Pacoima 1925, Sunland 1948, and La Crescenta 1933 6-minute quadrangles, and the San Fernando 1953 and Sunland 1953 7.5-minute quadrangles.

SAN FERNANDO, CALIF.
N3415—W11815/15
1940

U.S.G.S.
FILE COPY
TOPOGRAPHIC DIVISION
1675
T/V
AUG 1 1967

APPENDIX C-2

PHASE I PALEONTOLOGICAL RESOURCES ASSESSMENT

Phase I Paleontological Resources Assessment

Pacoima Spreading Grounds Improvement Project, Los Angeles, Los Angeles County, California

Prepared for

Los Angeles County Flood Control District
900 South Fremont Avenue
Alhambra, CA 91803-9974
Attn: John Bodenchak

USGS San Fernando, CA 7.5-Minute Quadrangle in Township 2 North; Range 15 West, unsurveyed section (S.B.B.M).

Prepared by

Mark A. Roeder, Paleontologist
BonTerra Psomas
3 Hutton Centre Drive, Suite 200
Santa Ana, California 92707
T: (714) 751-7373

September 2015

TABLE OF CONTENTS

Section **Page**

Management Summary MS-2
Purpose and Scope MS-2
Dates of Investigation MS-2
Findings of the Investigation MS-2
Investigation Constraints MS-2
Mitigation MS-2
Disposition of Data MS-2
1.0 Undertaking Information/Introduction 1
1.1 Contracting Data 1
1.2 Undertaking 1
1.3 Exhibits 1
1.4 Project Personnel 1
2.0 Regulatory Setting 1
2.1 State 2
2.1.1 California Environmental Quality Act and Guidelines 2
2.1.2 Native American Historic Resource Protection Act 2
2.1.3 California Penal Code 2
2.2 Regional and Local 2
2.2.1 County of Los Angeles General Plan Conservation and Open Space Element (1980) 2
2.2.2 County of Los Angeles General Plan Conservation and Natural Resources Element (2014 Draft) 3
3.0 Natural Setting 3
4.0 Methods 3
4.1 Literature Review 3
4.2 Paleontological Resources Records Search 3
4.3 Paleontological Resources Survey 4
5.0 Results 4
5.1 Literature Review, Record Searches, Field Survey 4
5.1.1 Literature Review 4
6.0 CEQA Impact Analysis 6
6.1 Significance Criteria 6
6.2 Project Impact Analysis 6
7.0 Mitigation measure 7
8.0 Certification 7
9.0 References 8

TABLES

Table **Page**

1 Paleontological Sensitivity 6

EXHIBITS

Exhibits **Follows Page**

1 Project Site 1
2 USGS 7.5-Minute Digital Quadrangle 1
3 Geologic Map 1

APPENDICES

A Personnel Qualifications
B Paleontological Resources Records Search (LACM)

PHASE I PALEONTOLOGICAL RESOURCES ASSESSMENT FOR THE PACOIMA SPREADING GROUNDS IMPROVEMENT PROJECT, LOS ANGELES, LOS ANGELES COUNTY, CALIFORNIA

by

Mark A. Roeder

September 2015

Submitted by:

Mark A. Roeder, Paleontologist
BonTerra Psomas
3 Hutton Centre Drive, Suite 200
Santa Ana, California 92707
T: (714) 751-7373

Submitted to:

Los Angeles County Flood Control District
900 South Fremont Avenue
Alhambra, CA 91803-9974

Attn: John Bodenchak

USGS **San Fernando, CA** 7.5-Minute Quadrangle in Township 2 North, Range 15 West, unsurveyed section (S.B.B.M).

BonTerra Psomas
Project Number: 3DPW027200

Key Words: Pacoima Spread Grounds, Quaternary Gravel, Quaternary Alluvium

MANAGEMENT SUMMARY

PURPOSE AND SCOPE

BonTerra Psomas undertook this project as part of California Environmental Quality Act (CEQA) requirements for the Pacoima Spreading Grounds Improvement Project. This Phase I Paleontological Resources Study was designed to identify, evaluate, and develop appropriate mitigation measures for any significant paleontological resources present on the project site.

DATES OF INVESTIGATION

On April 27, 2015, a paleontological resources survey was conducted by Paleontologist Mark Roeder with the assistance of John Bodenchak of the Los Angeles County Department of Public Works. This report was completed in May 2015.

FINDINGS OF THE INVESTIGATION

No paleontological resources were observed; however deeper excavations during the removal of clay beds may expose paleontological resources.

INVESTIGATION CONSTRAINTS

The study area was heavily disturbed by previous construction activities. These activities included construction of dikes, basins, and diversion structures. Also, the sediments in the basins have been previously excavated and/or disturbed by maintenance activities. Access to this area was primarily via the road on the dikes. The basins were dry and covered with vegetation.

MITIGATION

Paleontological monitoring of grading. Implementation will reduce project impacts to a less than significant level.

DISPOSITION OF DATA

This report will be filed with the client and with BonTerra Psomas. All field notes and other documentation related to the study are on file at the BonTerra Psomas Santa Ana office.

1.0 UNDERTAKING INFORMATION/INTRODUCTION

1.1 CONTRACTING DATA

The Los Angeles County Flood Control District (LACFCD) retained BonTerra Psomas to conduct a Phase I Paleontological Resources Study for the proposed Pacoima Spreading Grounds Improvement Project ("project"). This report details the findings of the investigation and offers management recommendations and mitigation measures to reduce the impact of the project to a less than significant level.

1.2 UNDERTAKING

At various times since the 1930's, the spreading basins have been excavated into native alluvial material. The levees that separate the individual basins consists of artificial fill and are typically about 15 feet high. Recent drilling operations indicate the presence of subsurface clay-rich horizons between 3 to 10 feet in thickness that underlie most of the spreading basins (LACDPW 2007, 2009) down to a maximum depth of 19 feet. These clay layers disrupt the downward infiltration of waters. Removal of these clays and replacement with coarser material will greatly improve the percolation rate. Also, these excavations will increase basin capacity and water conservation. To remove the clay horizons, 1.6 million cubic yards of sediment will be excavated with 1.37 million yards being exported.

1.3 EXHIBITS

Exhibit 1 depicts the general location of the project site. Exhibit 2 depicts the specific location of the project site on a portion of the U.S. Geological Survey's (USGS') San Fernando 7.5-minute quadrangles, in Township 2 North, Range 115 West, unsurveyed section. Exhibit 3 is the geologic map that provides details the geologic units present within the project site.

1.4 PROJECT PERSONNEL

BonTerra Psomas Paleontologist Mark A. Roeder reviewed the paleontological literature and records searches, completed a field survey, and prepared the technical report. Refer to Attachment A for qualifications.

2.0 REGULATORY SETTING

This section contains a discussion of the applicable laws, ordinances, regulations, and standards that govern cultural resources and must be adhered to both prior to and during project implementation. The report is intended to satisfy the requirements of the California Environmental Quality Act (CEQA) regulations (*California Public Resources Code* [PRC] §21083.2) and the State CEQA Guidelines (14 *California Code of Regulations* [CCR] §15064.5).

CEQA requires a lead agency to determine whether a project would have a significant effect on paleontological resources.

The proposed project will comply with all applicable governmental regulations, as discussed below. The analysis in this report takes into account that compliance with the applicable regulations will be required, and thus, is essentially a part of the proposed project. Standard compliance with existing regulations pertinent to the proposed project cannot be considered mitigation for significant impacts under CEQA, but may be identified in the impact analysis below as regulatory requirements.

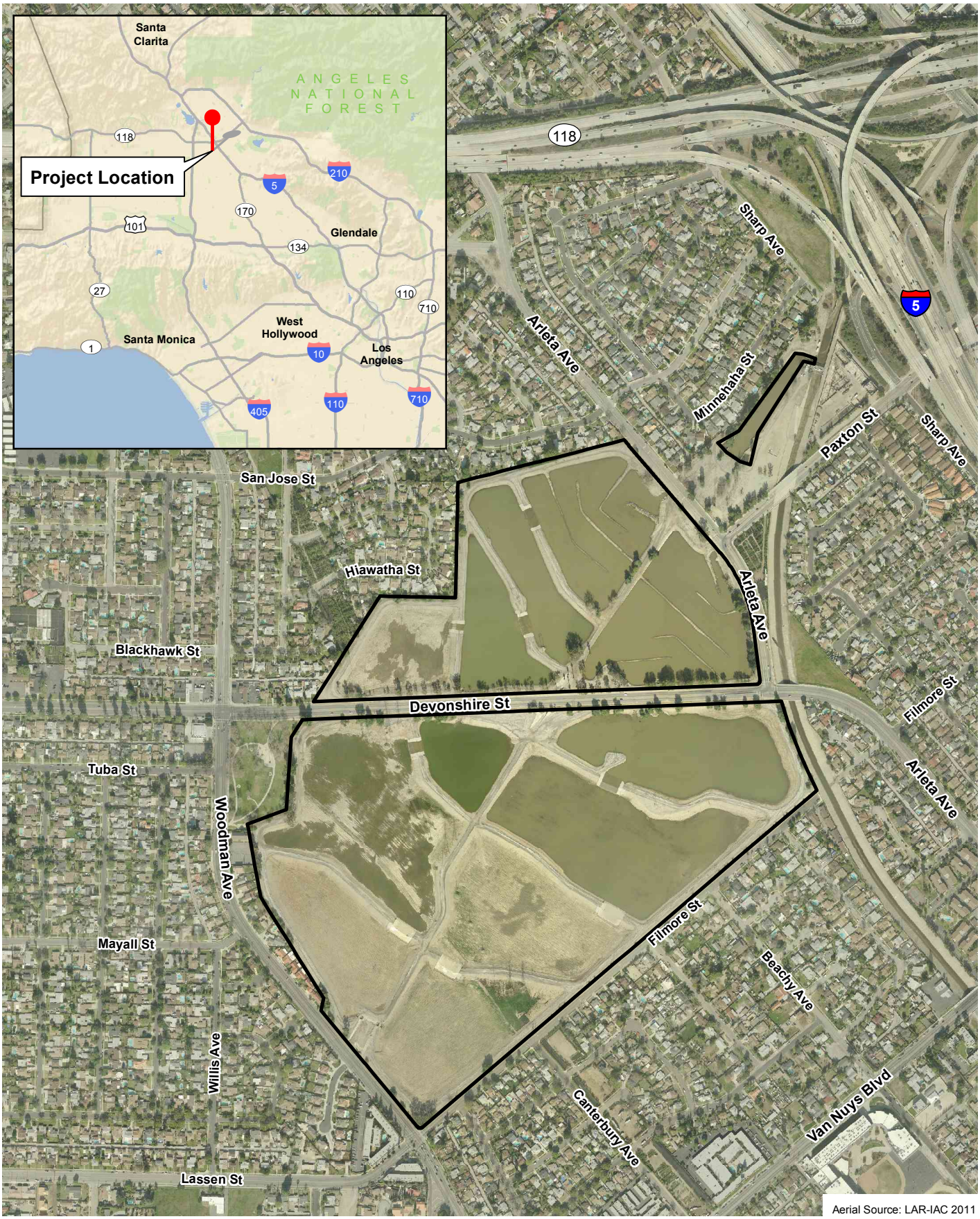

Aerial Source: LAR-IAC 2011

D:\Projects\COLADPW\J272\MXDs\Cultural\Paleo\Ex_ProjectSite_20150908.mxd

Project Site

Exhibit 1

Pacoima Spreading Grounds Improvement Project

N W E S

750 375 0 750 Feet

BonTerra PSOMAS

(Rev: 09-08-2015 LEW) R:\Projects\CoLADPW (DPW)\J272\Graphics\Cultural\Paleo\Ex1_ProjectSite_20150908.pdf

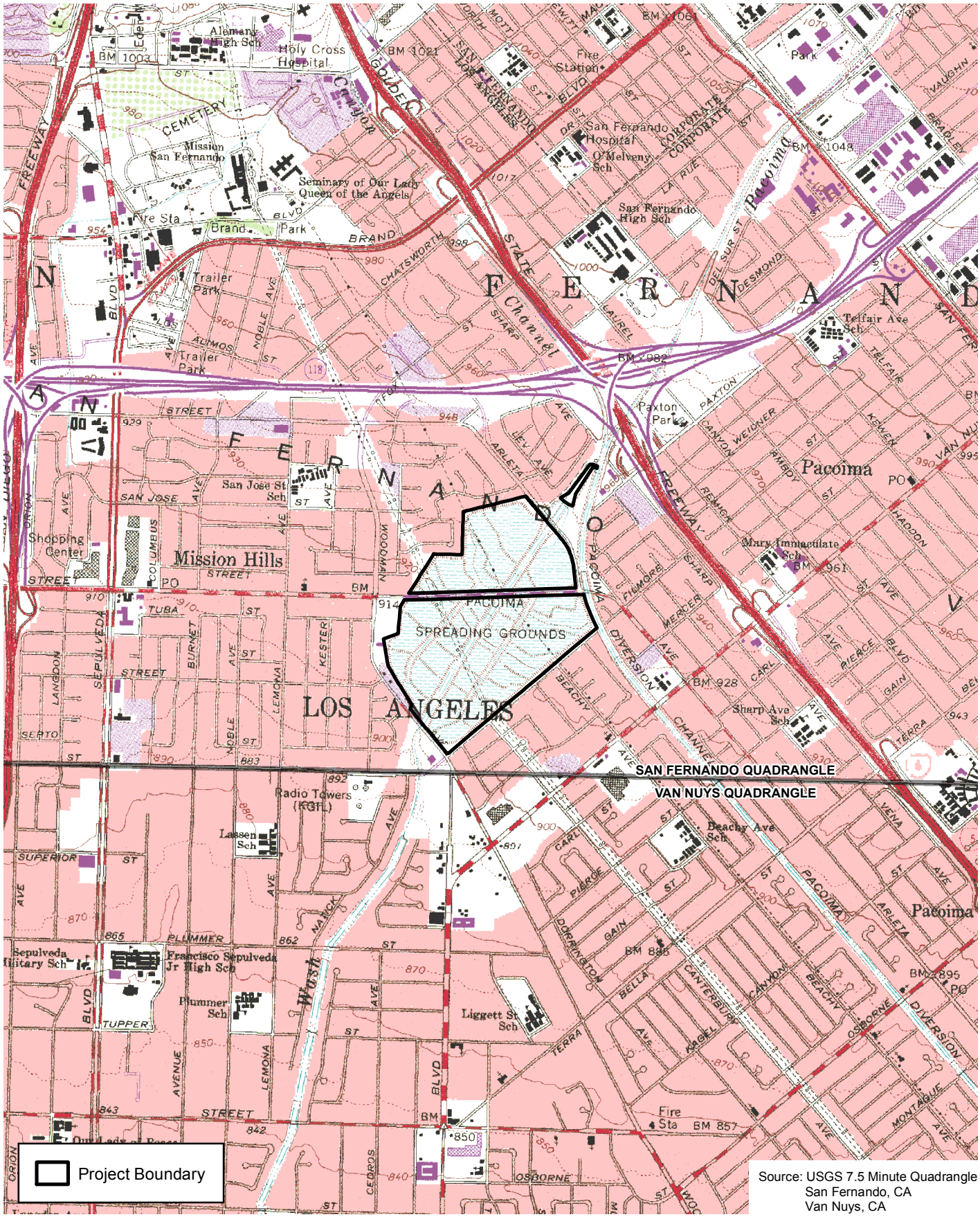

Source: USGS 7.5 Minute Quadrangle
San Fernando, CA
Van Nuys, CA

D:\Projects\COLADPW\J272\MXDs\Cultural\Paleo\Ex_USGS_20150908.mxd

USGS 7.5-Minute Digital Quadrangle

Exhibit 2

Pacoima Spreading Grounds Improvement Project

N W E S

2,000 1,000 0 2,000 Feet

BonTerra PSOMAS

(Rev: 09-08-2015 LEW) R:\Projects\CoLADPW (DPW)\J272\Graphics\Cultural\Paleo\Ex2_USGS_20150908.pdf

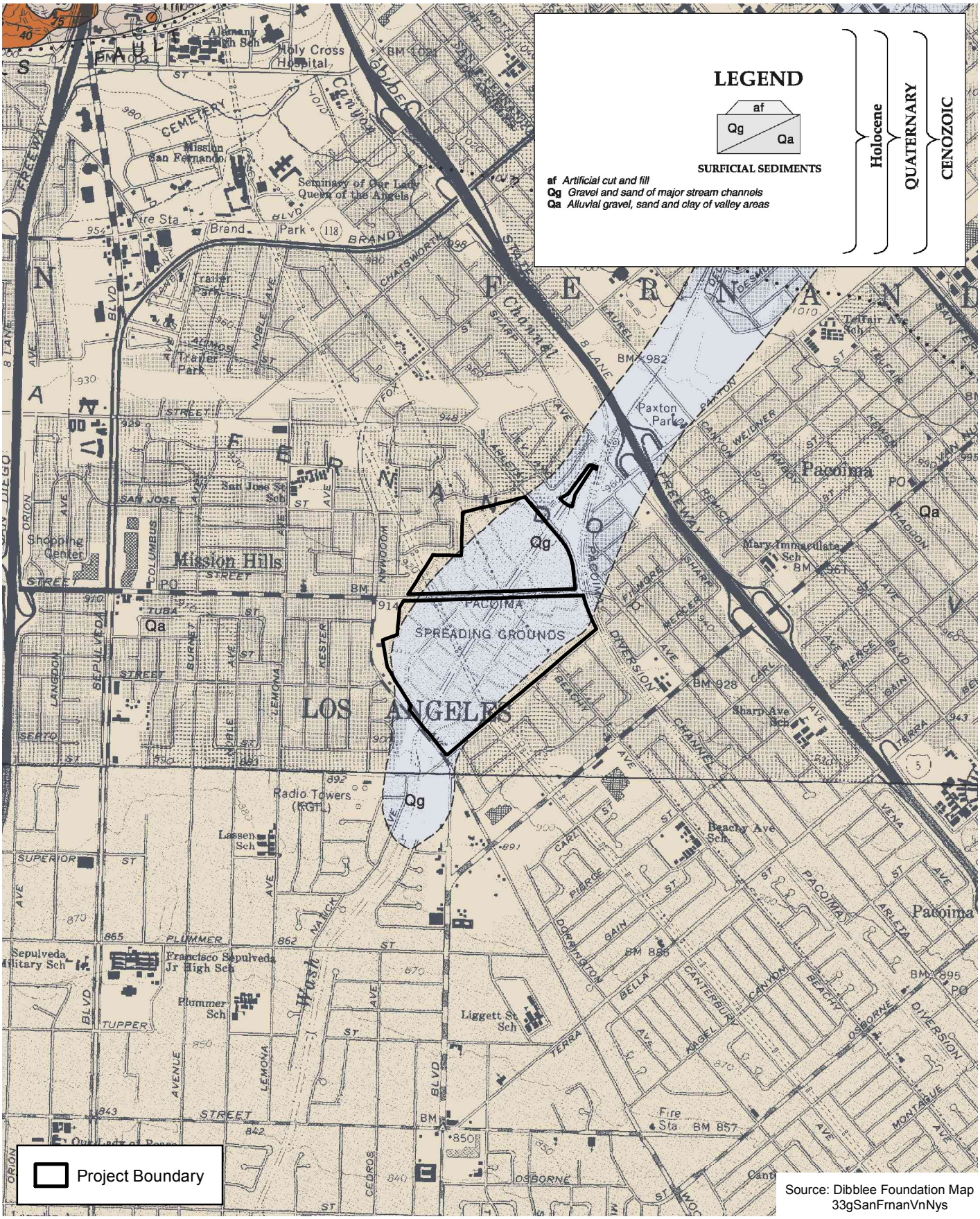

Source: Dibblee Foundation Map 33gSanFrnanVnNys

D:\Projects\COLADPW\J272\MXDs\Cultural\Paleo\Ex_Geology_20150908.mxd

Geologic Map

Exhibit 3

Pacoima Spreading Grounds Improvement Project

N W E S

2,000 1,000 0 2,000 Feet

BonTerra PSOMAS

(Rev: 09-08-2015 LEW) R:\Projects\CoLADPW (DPW)\J272\Graphics\Cultural\Paleo\Ex3_Geology_20150908.pdf

2.1 STATE

This section discusses State regulations applicable to paleontological resources on the project site.

2.1.1 California Environmental Quality Act and Guidelines

CEQA (as codified in §§21000 et seq. of the PRC) and the State CEQA Guidelines (as codified in 14 CCR §§15000 et seq.) establish a process by which various resources, including cultural and paleontological resources, may be assessed and considered for the purposes of proposed projects under State oversight. The nature of the resources themselves and the potential impacts to those resources are evaluated as part of the CEQA compliance review process.

The *California Code of Regulations* states that No person shall destroy, disturb, mutilate, or remove earth, sand, gravel, oil, minerals, rocks, paleontological features or features of caves" (14 CCR 4307). The code also states that "No person shall remove, injure, disfigure, deface, or destroy any object of archaeological or historical interest or value" (14 CCR 4308).

2.1.2 Native American Historic Resource Protection Act

The Native American Historic Resource Protection Act (*California Public Resources Code* §§5097–5097.9993) protects cultural resources on California Public lands and was amended by Senate Bill 1034 in 2010. It states that a person shall not knowingly and willfully excavate upon, or remove, destroy, injure, or deface, a vertebrate paleontological site or any paleontological feature, situated on public lands, except with the express permission of the public agency having jurisdiction over the lands.

2.1.3 California Penal Code

Section 6221.2 of the *California Penal Code* states that "every person, not the owner thereof, who willfully injures, disfigures, defaces, or destroys any object or thing of archeological or historical interest or value, whether situated on private lands or within any public park or place, is guilty of a misdemeanor".

2.2 REGIONAL AND LOCAL

2.2.1 County of Los Angeles General Plan Conservation and Open Space Element (1980)

The County of Los Angeles General Plan's Conservation and Open Space Element, Cultural Heritage Resources (County of Los Angeles 1980:II-5–II-6) states t the following:

> The County also has paleontological sites and important geological formations from periods many million years before the appearance of man. Our cultural heritage is nonrenewable and irreplaceable.
>
> > Problem: Resources continue to be haphazardly protected, and often there are insufficient funds for saving a threatened site or structure. . .
> >
> > Objective: Programs and procedures to identify and protect our cultural resources are needed. Public awareness of their value should be encouraged, and their public enjoyment should be fostered whenever possible.

2.2.2 County of Los Angeles General Plan Conservation and Natural Resources Element (2014 Draft)

This element guides the long-term conservation of cultural and paleontological resources and states the following:

- Paleontological resources are non-renewable and irreplaceable
- The primary threats to paleontological resources are incompatible land uses and development on or adjacent to resources, a lack of local registry, and the limitations of State and federal programs to protect resources.

The following policies relate to the protection of paleontological resources.

- Policy C/NR 14.1: Mitigate all impacts from new development on or adjacent to paleontological resources to the greatest extent feasible.
- Policy C/NR 14.2: Support an inter-jurisdictional collaborative system that protects and enhances paleontological resources.
- Policy C/NR 14.5: Promote public awareness of paleontological resources.
- Policy C/NR 14.6: Ensure proper notification and recovery processes are carried out for development on or near paleontological resources.

3.0 NATURAL SETTING

The project is located in the northeastern portion of the San Fernando Valley (Exhibit 1) within the Pacoima Wash Drainage. The project area is depicted on the USGS San Fernando 7.5-minute quadrangle map (1966; photorevised 1988) within Township 2 North, Range 17 West, unsurveyed section (Exhibit 2).

4.0 METHODS

4.1 LITERATURE REVIEW

The literature review for this study included an examination of the geologic maps for the Project area. The literature review encompasses the entire project footprint and included a one-mile buffer around it (hereinafter referred to as the “Study Area”). The review included previous geologic mapping of the area. In addition to the reviewed published geologic maps, technical reports provided the basis from which the regional and project-specific geology was derived for this project.

Pertinent published literature and unpublished manuscripts with regards to the geology and paleontology of northern Los Angeles City and the San Fernando Valley were also reviewed for this project. In the process of conducting the background literature review, existing paleontological resource data (including such published resources as books, journals, and geologic maps, as well as information available via the internet on government websites) were consulted. Furthermore, an online database search was conducted to identify previous paleontological resource assessments conducted within the boundaries of the project site and in the surrounding areas.

4.2 PALEONTOLOGICAL RESOURCES RECORDS SEARCH

A paleontological records search from the Vertebrate Paleontology Section of the Natural History Museum of Los Angeles was requested and received and can be found in Attachment B (McLeod

2015). Also the Catalog of Late Pleistocene vertebrates from California (Jefferson 2008) was reviewed for the project area.

4.3 PALEONTOLOGICAL RESOURCES SURVEY

BonTerra Psomas Paleontologist Mark A. Roeder conducted a paleontological resource survey to identify any unrecorded paleontological resources and to physically evaluate the mapped geologic data as presented in the record searches and literature review. Moreover, the survey was intended to physically examine the surficial rock units within the project site and to determine their paleontological sensitivity ratings. Mr. Roeder conducted a paleontological resources field survey on April 27, 2015. The survey involved a windshield survey and some physical inspections of surface geologic exposures for the presence of paleontological resources and/or the potential to yield paleontological resources.

5.0 RESULTS

5.1 LITERATURE REVIEW, RECORD SEARCHES, FIELD SURVEY

5.1.1 Literature Review

Regional Geology

The San Fernando Valley and adjacent mountains are part of the Transverse Ranges physiographic province that is composed of parallel, east-west trending mountain ranges and sediment-filled valleys.

The Pacoima Spreading Grounds are located at the northeastern end of the San Fernando Valley, which is an elongated valley, roughly 22 miles long (in an east/west direction) and generally 9 miles wide (in a north/south direction), although stretching to 12 miles wide at its widest point. Situated within the Transverse Ranges geomorphic province of California, the San Fernando Valley is bound by the San Gabriel and Santa Susana Mountains to the north, the Santa Monica Mountains to the south, the Verdugo Mountains to the east, and the Simi Hills to the west. The San Fernando Valley contains thick deposits of alluvium from the surrounding mountains.

Project Geology

The geology of the Project area can be seen in Exhibit 3. The area is underlain by three surficial sedimentary rock units: artificial fill (af), Quaternary gravel, and Quaternary alluvium (Oakeshott 1958; Jennings and Strand 1969; Dibblee 1991; LACDPW 2007, 2009).

Artificial Fill (af)

Most of the artificial fill is in the levees between and adjacent to the basins and the surface and subsurface of the basins. Sand, silt, gravel, and clay were excavated from the basins to construct the levees that vary in height from 8 to 16 feet from the basin bottoms (LACDPW 2007). Because this material is highly disturbed and of recent age, the likelihood of paleontological resources is extremely low.

Quaternary Gravel (Qg)

Most of the Study Area is underlain by Quaternary gravel (Qg) (Dibblee 1991; Exhibit 3), which consists of sand, silt, clay, and gravel deposited in the Pacoima Wash Drainage as either stream channel and/or floodplain (overbank) deposits. In various areas, the upper horizons of these sediments are disturbed from surface to possibly a depth of 10 feet from past excavations to

construct the spreading grounds and berms. Although very young in surface and at shallow depths, these sediments increase in age at deeper levels. In similar Late Pleistocene-aged sediments, remains of large extinct mammals such as Columbian mammoth, mastodon, ground sloth, tapir, horse, camel, dire wolf, saber-tooth cat, and American lion were recovered (Jefferson 2008; Miller 1971) as well as remains of extant smaller fish, amphibians, reptiles, birds, and mammals. .

McLeod (2015) stated "these deposits typically do not contain significant vertebrate fossil remains, at least in the uppermost layers. At depth, however, older Quaternary sediments that contain significant fossil vertebrate materials are likely to be encountered.

Quaternary Alluvium (Qa)

Along the Study Area's northern and southern boundaries, a narrow outcrop belt is present that is underlain by Quaternary alluvium (Qa), which consists of sand, silt, and clay deposited in the Pacoima Wash Drainage as either stream channel and/or floodplain (overbank) deposits and may be equivalent or older than the Quaternary gravel (Qg) (Dibblee 1991; Exhibit 3). Although very young in surface and at shallow depth, these sediments increase in age at deeper levels. In similar Late Pleistocene-aged sediments, remains of large extinct mammals such as Columbian mammoth, mastodon, ground sloth, tapir, horse, camel, dire wolf, saber-tooth cat, and American lion were recovered (Jefferson 2008; Miller 1971). Also, the remains of extant smaller fish, amphibians, reptiles, birds, and mammals have been recovered (Jefferson 2008; Miller 1971).

McLeod (2015) stated "these deposits typically do not contain significant vertebrate fossil remains, at least in the uppermost layers. At depth, however, older Quaternary sediments that contain significant fossil vertebrate materials are likely to be encountered.

Paleontological Record Searches

Although the records search from the Vertebrate Paleontology Section of the Natural History Museum showed no vertebrate (animals with backbones, fish, amphibians, reptiles, birds and mammals) sites in the Study Area (McLeod 2015), he mentions a number of significant fossil finds in the vicinity (less than 10 miles away).

Paleontological Field Survey

On April 27, 2015, Mr. Roeder conducted the paleontological resources field survey. In the company of John Bodenchak (LACDPW), he conducted a windshield survey and minor physical inspections. No underlying bedrock formations were exposed for visual inspection. No paleontological resources were observed.

6.0 CEQA IMPACT ANALYSIS

This impact analysis is provided to assist in the preparation of an environmental document for the proposed project and provides discussion regarding the significance criterion for paleontological resources.

6.1 SIGNIFICANCE CRITERIA

Appendix G of the State CEQA Guidelines contains the Initial Study Environmental Checklist Form, which includes one question relating to paleontological resources. The issue presented in the Initial Study Checklist has been used as a significance criterion. Accordingly, a project may result in a significant environmental impact if it:

- Would directly or indirectly destroy a unique paleontological resource or site or unique geologic feature.

6.2 PROJECT IMPACT ANALYSIS

Would the project directly or indirectly destroy a unique paleontological resource or site or unique geologic feature?

Within the Survey Area are exposures of surficial sediments that are very young and, because of their youthfulness, typically do not contain fossil resources. However, these sediments become older with increasing depth and may yield paleontological resources.

Geological and paleontological information on rock formations based on paleontological resources within and adjacent to the project site were used to rate the paleontological sensitivity of the units and their potential for containing and yielding fossils; this information is presented in Table 1.

TABLE 1
PALEONTOLOGICAL SENSITIVITY

Rock Unit	Description	Sensitivity
Artificial Fill (af)	Artificial fill consists of sand, silt, gravel, and clay that apparently was excavated from the basin areas to construct the dikes.	No
Quaternary Gravel (Qg)	Quaternary gravel consists of gravel and sand deposited in the channel of Pacoima Wash and its floodplain environments.	*Low
Quaternary Alluvium (Qa)	Quaternary alluvium consists of gravel, sand, silt, and clay deposited in steam cannels and/or floodplain environments.	*Low
*Moderate sensitivity in excavations more than 10 feet below the current ground surface Sources: Oakeshott 1958;Jennings and Strand 1969; Dibblee 1991; County of Los Angeles Dept. of Public Works 2007,2009		

On the project site, large areas are slated for excavation within the Quaternary gravel and Quaternary alluvium. The surface area and alluvial sediments beneath the current spreading grounds have been impacted by past construction/maintenance activities associated with berm and spreading ground excavations. Because of its moderate paleontological sensitivity of possibly undisturbed native sediments at depths greater than ten feet, direct impacts to paleontological resources may result from excavation for removal of clay horizons and a diversion channel and from basin reconfiguration. Such excavations in sensitive sediments at a depth of

ten feet or more must be monitored by County on-site staff and construction personnel, trained by a qualified Paleontologist, as described in the mitigation measure below.

7.0 MITIGATION MEASURE

Prior to the start of sediment removal, a qualified Paleontologist shall be present at the pre-grading conference to establish procedures for temporarily halting or redirecting work to permit the sampling, identification, and evaluation of newly discovered paleontological resources found during excavation activities. The paleontologist shall conduct a training for construction personnel and County on-site staff on the identification of possible paleontological resources that may be present in the area. A monitoring protocol shall be established to identify and salvage any paleontological resources that may be unearthed through excavation activities. Monitoring would only be required for soil disturbance into native soils that have the potential for resources, which occur approximately 10 feet or deeper below the surface soils. The County Monitors must be adequately trained by a qualified Paleontologist in the recognition of paleontological resources. Any discovered resources shall be reported to a qualified Paleontologist for evaluation. If the resource is found to be significant, the Paleontologist shall determine appropriate actions, in cooperation with the County, for further exploration and/or salvage. A Disposition of the Recovered Paleontological Resources and Mitigation Report shall be prepared by the qualified Paleontologist and submitted to the County. Any recovered fossils shall be deposited in an accredited institution or museum, such as the Natural History Museum of Los Angeles County.

8.0 CERTIFICATION

I hereby certify that the statements furnished above and in the attached exhibits present the data and information required for this paleontological resources report, and that the facts, statements, and information presented are true and correct to the best of my knowledge and belief.

DATE: September 2015 SIGNED:

Mark A. Roeder
Senior Paleontologist

9.0 REFERENCES

Chambers Group

2014 *Initial Study Checklist, Pacoima Spreading Grounds Improvement Project, Pacoima, CA (City of Los Angeles)* (prepared for Los Angeles County Flood Control District). Chambers Group, Santa Ana, California.

Dibblee, T.H., Jr.

1991 Geologic map of the San Fernando quadrangle (Map DF-33, scale 1:48000). Dibblee Geological Foundation, Los Angeles County.

Jefferson, G.T.

2008 Catalogue of Late Quaternary Vertebrates from California. Unpublished manuscript on file at the Stout Research Center, Anza-Borrego Desert State Park.

Jennings, C.W. and R.G. Strand

1969 Geologic Map of California, Los Angeles Sheet (scale 1:250,000). California Division of Mines and Geology, San Francisco.Los Angeles County Department of Public Works (LACDPW)

2007 Subsurface Investigation: Pacoima Spreading Grounds, Arleta and Mission Hills, City of Los Angeles, California.

2009 Geologic Investigation: Pacoima Spreading Grounds, Arleta and Mission Hills, City of Los Angeles, California.

Los Angeles, County of

1980 County of Los Angeles General Plan (Conservation and Open Space Element, Cultural Heritage Resources). Los Angeles, California.

2015 *Los Angeles County General Plan, Revised Draft* (Chapter 9, Conservation and Natural Resources Element; VIII. Historic, Cultural, and Paleontological Resources. pp.119, 155, 157, 159). Los Angeles, California.

McLeod, S.

2015 Paleontological Resources for the proposed Pacoima Spreading Ground Improvement Project. Vertebrate Paleontology Section, Natural History Museum of Los Angeles County. On file, BonTerra Psomas, Santa Ana.

Miller, W.E.

1971 Pleistocene vertebrates of the Los Angeles Basin and vicinity (exclusive of Rancho La Brea). *Bulletin of the Los Angeles County Museum of Natural History, Science* 10:1–124.

Oakeshott, G.B.

1958 Geology and Mineral Deposits, San Fernando Quadrangle, Los Angeles County, California. *California Division of Mines, Bulletin 172.*

ATTACHMENT A

PALEONTOLOGICAL RESOURCES RECORDS SEARCH (LACM)

Natural History Museum
of Los Angeles County
900 Exposition Boulevard
Los Angeles, CA 90007

tel 213.763.DINO
www.nhm.org

Vertebrate Paleontology Section
Telephone: (213) 763-3325
Fax: (213) 746-7431
e-mail: smcleod@nhm.org

6 May 2015

Mark A. Roeder
1731 New Hampshire Drive
Costa Mesa, CA 92626

Attn: Mark A. Roeder

re: Paleontological resources for the proposed Pacoima Spreading Grounds Improvement Project, Psomas Job # 3DPW027200, in the City of Los Angeles, Los Angeles County, project area

Dear Mark:

I have conducted a thorough search of our paleontology collection records for the locality and specimen data for paleontological resources for the proposed Pacoima Spreading Grounds Improvement Project, Psomas Job # 3DPW027200, in the City of Los Angeles, Los Angeles County, project area as outlined on the portion of the San Fernando USGS topographic quadrangle map that you sent to me via e-mail on 1 May 2015. We do not have any vertebrate fossil localities that lie directly within the proposed project boundaries, but we do have localities nearby from the same sedimentary deposits that occur at depth in the proposed project area.

In the entire proposed project area the surface deposits consist of gravelly younger Quaternary Alluvium, derived as fluvial deposits from the Pacoima Wash. These deposits typically do not contain significant vertebrate fossil remains, at least in the uppermost layers. At depth, however, older Quaternary sediments that contain significant fossil vertebrate materials are likely to be encountered. Our closest fossil vertebrate localities from similar deposits are just west of north of the proposed project area at or near the Van Norman Reservoir. These localities include LACM 3397 that produced fossil bison, *Bison*, at a seventy-five foot depth, LACM 5745 that contained fossil mastodon, *Mammut*, and horse, *Equus*, in fill dirt and LACM 7152 that produced fossil mammoth, *Mammuthus*, and bison, *Bison*, in terrace deposits.

Our next closest fossil vertebrate locality from similar deposits is LACM 1146, east-southeast of the proposed project area northeast of the Golden State Freeway (I-5) and east of San Fernando Road, that produced fossil specimens of mastodon, *Mammut*, horse, *Equus*, and camel, Camelidae, from a gravel pit at depths of 160-170 feet below the surface.

Shallow excavations in the younger Quaternary Alluvium exposed throughout the proposed project area are unlikely to produce significant fossil vertebrate remains. Deeper excavations in the proposed project area that extend down into older Quaternary deposits, however, may well encounter significant vertebrate fossils. Any substantial excavations in the proposed project area, therefore, should be monitored closely to quickly and professionally recover any fossil remains discovered while not impeding development. Sediment samples should also be collected and processed to determine the small fossil potential in the proposed project area. Any fossils recovered during mitigation should be deposited in an accredited and permanent scientific institution for the benefit of current and future generations.

This records search covers only the vertebrate paleontology records of the Natural History Museum of Los Angeles County. It is not intended to be a thorough paleontological survey of the proposed project area covering other institutional records, a literature survey, or any potential on-site survey.

Sincerely,

Samuel A. McLeod

Samuel A. McLeod, Ph.D.
Vertebrate Paleontology

enclosure: invoice

ATTACHMENT B

PERSONNEL QUALIFICATIONS

Mark A. Roeder

Senior Paleontologist

EDUCATION

1977 / Bachelor of Arts, Anthropology / San Diego State University, CA

PROFESSIONAL REGISTRATION

Registered Paleontologic Consultant, County of Orange

Mark A. Roeder has 34 years of experience as a Paleontologist. He has extensive experience with California Environmental Quality Act (CEQA) and National Environmental Policy Act (NEPA) compliance and with conducting and managing paleontological resource impact assessments and impact mitigation programs for large construction projects in California. Project experience includes municipal solid waste landfills; aggregate quarries; flood-control facilities; oil refineries; natural gas pipelines; freeways and other roadways; subways; waste water treatment facilities; housing developments; planned communities; office buildings/complexes; shopping centers; hospitals and medical centers; industrial complexes; parking lots/structures; land exchanges; and conditional use permit and specific plan revisions. He has worked for a diverse set of clients including private-industry clients; public utilities; conservancies; and federal, State, County, City, and regional agencies. Mr. Roeder has conducted paleontological resource assessments—which involve data searches such as literature reviews, archival searches, field surveys, and consultation with other paleontologists—in order to develop baseline inventories to evaluate the scientific importance of resources and potential for disturbance by adverse, project-related impacts; and to formulate mitigation measures to reduce these impacts to less than significant levels. Mr. Roeder has worked on paleontological resources impact mitigation programs that have required monitoring of earth-moving activities, recovery of fossil remains, field personnel supervision, and progress and final report preparation. His previous project participation has involved extensive coordination and consultation with project proponents, other consulting firms, and permitting agencies; adherence to strict delivery schedules; and completion of tasks within specified budget limits. Mr. Roeder also has an extensive paleontological research background in the fish faunas of the Cenozoic marine and lacustrine formations of Southern California.

Representative Project Experience

Simi Valley Landfill Paleontological Monitoring, Simi Valley: Mr. Roeder was the Field Paleontologist for the Simi Valley Landfill and conducted paleontological resource monitoring during excavations for cover stockpiles and cell development. He supervised the collections of fossils during these excavations. Mr. Roeder worked closely with the paleontologists of the Natural History Museum of Los Angeles County during the treatment, identification, and curations of these fossils into the Museum collections.

Desert Harvest Solar Project, Desert Center: Mr. Roeder was the Field Paleontologist for the Simi Valley Landfill and supervised paleontological resource monitoring during excavations for cover stockpiles and cell development. He was responsible for supervising and participating in fossil salvages, recordation of pertinent paleontological and geological data, preparation and stabilization of fossil finds, and the final paleontological resource mitigation report.

Silverleaf Solar Project, El Centro: Mr. Roeder was the Paleontologist for this project and was responsible for a paleontological resource management document for proposed solar energy generation area and transmission line. He conducted paleontological resource survey of approximately 1,500 acres for the proposed solar farm facility and associated transmission line and power line tie-ins. The

report included e results of record and literature searches, methods, results and mitigation.

Prima Deshecha Landfill Paleontological Monitoring, San Clemente: Mr. Roeder was the Field Paleontologist was responsible for coordination of paleontological resource monitoring, supervising and participating in fossil salvages, recordation of pertinent paleontological and geological data, preparation and stabilization of fossil finds, and the final paleontological resource mitigation report.

Sunset Ridge Park Paleontological Assessment, Newport Beach: Mr. Roeder is the Paleontologist for the Sunset Ridge Park project. Located on the northwestern corner of Superior Avenue and West Coast Highway, the approximate 18.9-acre site, located within the Coastal Zone, would be developed with active and passive recreational uses. Mr. Roeder wrote the paleontological assessment in order to determine the project site's potential for the presence of sensitive rock formations and fossil resources. The paleontological significance of the project site was deemed "high". In January 2014, Mr. Roeder supervised paleontological work which included an intensive site survey, sampling of fossil outcrops, preservation of some outcrops (if possible), and monitoring of construction activities for the park. The treatment of the fossils and documentation report are pending.

Newport Banning Ranch Paleontological Assessment, Newport Beach: Mr. Roeder was a Paleontologist for this project. The Newport Banning Ranch project would allow for the development of up to 1,375 residential dwelling units; 75,000 square feet of commercial uses; a 75-room resort inn; and approximately 52 acres of public parks on a 401-acre site. Mr. Roeder wrote the paleontological assessment in order to determine the project site's potential for the presence of sensitive rock formations and fossil resources. The paleontological significance of the project site was deemed "high. Mr. Roeder will be involved with future paleontological work including an intensive site survey, sampling of fossil outcrops, preservation of some outcrops (if possible), and monitoring of construction activities.

Eastern Transportation Corridor (State Route 241) Project, Orange County: Mr. Roeder was the Senior Paleontologist for the Eastern Transportation Corridor Project. He supervised the paleontologist resource monitoring and collection of fossil samples during construction activities. Also, he was involved in the treatment and documentation of the fossils.

Sandalwood Drive Extension Paleontological Monitoring and Mitigation, Calimesa: Mr. Roeder was a Paleontologist for the Sandalwood Drive Extension project, which involved the grading of a one-mile-long access road. He directed paleontological monitoring of the project site. Twenty-four paleontological sites were discovered that yielded over 500 fossil specimens. Mr. Roeder provided paleontological resources mitigation services during earth-moving activities, and treated fossils found on the project site. Treatment included cleaning, identifying and stabilizing fossils for curation, and documentation.

San Diego 6 Pipeline Project Paleontological Monitoring, Temecula: Mr. Roeder was a Paleontologist for the San Diego 6 Pipeline Project for the Metropolitan Water District of Southern California and he directed paleontological monitoring of trenching activities. Three paleontological sites were discovered that yielded over 100 fossil specimens. Mr. Roeder provided paleontological resources mitigation services during earth-moving activities and treated fossils uncovered on the project site. Treatment included cleaning, identifying and stabilizing the fossils for curation and documentation.

APPENDIX D-1

PHASE I ENVIRONMENTAL SITE ASSESSMENT

Prepared for:

BonTerra Psomas
225 South Lake Avenue, Suite 1000
Pasadena, CA 91101

Phase I Environmental Site Assessment

Pacoima Spreading Grounds
Los Angeles, California

Prepared by:

Geosyntec consultants

engineers | scientists | innovators

2100 Main Street, Suite 150
Huntington Beach, California 92648

Project Number HR1507

26 June 2015

EXECUTIVE SUMMARY

This Executive Summary presents the results of the Phase I Environmental Site Assessment (ESA) performed by Geosyntec Consultants (Geosyntec) for the Pacoima Spreading Grounds (the Site) located in the northern San Fernando Valley in the Los Angeles Basin, California. The Site is located near the intersection of Devonshire Street and Arleta Avenue on the west side of the Pacoima Diversion Channel (Figure 1) in Los Angeles, California. The Site encompasses approximately 169 acres including a radial gate to an intake canal (from the Pacoima Diversion Channel), equipment control/ storage structures, and 12 spreading basins (Figure 2). The area surrounding the Site includes residences, parks, drainage channels and freeways. This Phase I ESA was prepared in accordance with the scope of work, terms and conditions described in Geosyntec's proposal dated 16 December 2014. This Phase I ESA was prepared to support the California Environmental Quality Act (CEQA) process for a basin enhancement project at the Site consisting of removal of clay layers of soil beneath the basins to enhance the infiltration capacity of the system and replacement of the intake canal.

The objective of performing this Phase I ESA in accordance with ASTM Standard E 1527-13 was to identify, to the extent feasible, "Recognized Environmental Conditions" (RECs) at the Site as the "REC" term is defined by ASTM E 1527-13[1].

FINDINGS AND CONCLUSIONS

The Site receives drainage from the Pacoima Wash subwatershed. The Site facilitates the groundwater basin recharge by receiving the Pacoima Wash surface water, removing sediment and debris, and spreading the water through the basins allowing for percolation into the underlying groundwater. The Site has been serving as a drainage/flood control feature, and later a spreading grounds, since the early 1900s.

Land use surrounding the Site has evolved from rural and undeveloped into densely developed urban uses. The Site vicinity is currently mostly developed as residential and there are two parks adjoining the Site to the east and west, a plant nursery to the east and some commercial use to the south.

The Phase I ESA revealed evidence of recognized environmental conditions (RECs) in connection with the Site. The Site comprises spreading grounds; a drainage and flood control feature that receives surface water and debris from a large subwatershed area

[1] ASTM E1527-13 Standard Practice for Environmental Site Assessments: Phase I Environmental Site Assessment Process.

within the San Gabriel Mountains and the San Fernando Valley urban areas. The results of this assessment indicate that potential sources of environmental impact at the Site include:

- The closed San Fernando City Landfill and the oil and gas wells located adjacent to the Site (northeast of the Site) are potential sources of gas migration to the Site;
- underground storage tanks that were located on-Site at 10450 Arleta Avenue (northeast portion of the Site); and
- petroleum hydrocarbons and lead that were detected in soil samples during previous subsurface investigations on the northeast portion of the Site.

TABLE OF CONTENTS

Page

1. INTRODUCTION 1
   - 1.1 Terms of Reference 1
   - 1.1 Purpose 1
   - 1.2 Scope of Services 2
   - 1.3 Limitations and Exceptions 3
2. SITE AND VICINITY DESCRIPTION 5
   - 2.1 Site Location and Description 5
   - 2.2 Geoenvironmental Characteristics 5
     - 2.2.1 Topography 5
     - 2.2.2 Geology 5
     - 2.2.3 Hydrogeology 6
     - 2.2.4 Surface Water Hydrology 7
   - 2.3 Current Site Uses and Descriptions of Structures 7
   - 2.4 Current Adjoining Property Uses and Descriptions of Structures 8
3. USER PROVIDED INFORMATION 9
   - 3.1 Title Records 9
   - 3.2 Environmental Liens or Activity and Use Limitations 9
   - 3.3 Specialized Knowledge 9
   - 3.4 Commonly Known or Reasonably Ascertainable Information 9
   - 3.5 Owner, Property Manager, and Occupant Information 9
   - 3.6 Reason for Performing This Phase I ESA 10
   - 3.7 Valuation Reduction for Environmental Issues 10
   - 3.8 Other User Provided Information 10
4. RECORDS REVIEW 11
   - 4.1 Standard Environmental Records Database Search 11
     - 4.1.1 Site and Adjoining Property Record Results 11
     - 4.1.2 Other Offsite Record Results 13
     - 4.1.3 Orphan Sites 13
   - 4.2 Local Regulatory Agencies 13
   - 4.3 Historical Documentation Review 13
     - 4.3.1 Historical Aerial Photographs and Topographic Maps 13
     - 4.3.2 Sanborn Fire Insurance Map Review 14
     - 4.3.3 City Directories 14
   - 4.4 Additional Environmental Record Sources 15
5. SITE RECONNAISSANCE AND INTERVIEWS 17

TABLE OF CONTENTS (Cont.)

Page

5.1 Methodology and Limiting Conditions 17
5.2 General Site Setting 17
5.2.1 Current Use of the Site 17
5.2.2 Current Use of Adjoining Properties and the Surrounding Area .. 17
5.3 Observations 18
5.3.1 Hazardous Substances and Petroleum Products 18
5.3.2 Storage Tanks 18
5.3.3 Odors 18
5.3.4 Pools of Liquid 18
5.3.5 Drums or Containers and Unidentified Substances/Containers 18
5.3.6 Indications of Polychlorinated Biphenyls (PCBs) 19
5.3.7 Heating and Cooling System 19
5.3.8 Stains or Corrosion 19
5.3.9 Drains and Sumps 19
5.3.10 Pits, Ponds, and Lagoons 19
5.3.11 Stained Soil or Pavement 19
5.3.12 Stressed Vegetation 19
5.3.13 Solid Waste 19
5.3.14 Wastewater or Stormwater Discharge 20
5.3.15 Wells 20
5.3.16 Septic Systems 20

6. INTERVIEWS 21

6.1 Interview of Property Owner 21
6.2 Interview with Others 21

7. EVALUATION 22

7.1 Findings and Opinions 22
7.2 Conclusions 23
7.3 Data Gaps 23
7.4 Exceptions and Deviations 23
7.5 Qualifications of Environmental Professionals 24
7.6 Signature by Environmental Professionals 25

8. REFERENCES 26

LIST OF TABLES

Table 1: Summary of Records Review
Table 2: Detailed Scope Elements per ASTM E 1527-13

LIST OF FIGURES

Figure 1: Site Location
Figure 2: Site Plan
Figure 3: San Fernando Valley Basin-TCE Contamination
Figure 4: San Fernando Valley Basin-PCE Contamination
Figure 5: Subwatershed
Figure 6: Surface Drainage – General Layout
Figure 7: Site Adjoining Land Use
Figure 8: GeoTracker Records Map
Figure 9: Historical Fire Boundaries

LIST OF APPENDICES

Appendix A: Historical Topographic Maps
Appendix B: EDR Database Records Review Report
Appendix C: Selected Agency Records
Appendix D: Historical Aerial Photographs
Appendix E: Historical Sanborn Maps
Appendix F: City Directory Abstracts
Appendix G: Site Reconnaissance Photographic Documentation
Appendix H: Environmental Professionals' Qualifications

1. INTRODUCTION

1.1 Terms of Reference

This report documents the results of the Phase I Environmental Site Assessment (ESA) performed by Geosyntec Consultants, Inc. (Geosyntec) for the Pacoima Spreading Grounds (the Site) located in the northern portion of the San Fernando Valley near the intersection of Devonshire Street and Arleta Avenue on the west side of the Pacoima Diversion Channel (Figure 1). The boundaries of the Site encompassing approximately 169 acres are included in Figure 2. This Phase I ESA was prepared in accordance with the scope of work, terms and conditions described in Geosyntec's proposal dated 16 December 2014. This report incorporates, by reference, the American Society of Testing and Materials (ASTM) Standard E 1527-13, "*Standard Practice for Environmental Assessments: Phase I Environmental Site Assessment Process*." Limitations and exceptions are provided in Section 1.4 of this report.

1.1 Purpose

The Los Angeles County Flood Control District (LACFCD) is planning a basin enhancement project (Project) at the Site and is subject to the California Environmental Quality Act (CEQA) process. This Phase I ESA was performed to primarily support the CEQA process.

The overall objective of the Project is to expand and reconfigure the spreading basins to increase the spreading grounds' storage capacity, percolation rate, and annual water conservation. The following have been proposed by the LACFCD:

- reconfiguring the spreading basins: combining and deepening the existing basins;
- removing the low permeability clay layers underlying the spreading basins and replacing them with higher permeability soils;
- exporting excavated materials; and
- replacing the intake canal with buried pipes.

Considering the scope of the Project, additional Site-specific considerations were incorporated into the scope of this Phase I ESA, including:

- hydrogeologic conditions (such as groundwater flow regime and groundwater quality);

- hydrologic conditions (such as surface water flow regime and surface water quality from the upgradient tributary drainage, including industrial discharges, beyond the Site limits); and

- the known occurrence and potential for natural or industrial fires that may result in additional concentrations of fire or fire-related cleanup debris and constituents (such as metals) at the Site.

The purpose of the Phase I ESA was to identify Recognized Environmental Conditions (RECs), Historical Recognized Environmental Conditions (HRECs), and/or Controlled Recognized Environmental Conditions (CRECs) at the Site. For the purpose of this report, and as defined by ASTM Standard E1527-13, a REC is, "… *the presence or likely presence of any hazardous substance or petroleum products in, on, or at a property: (1) due to any release to the environment; (2) under conditions indicative of a release to the environment; or (3) under conditions that pose a material threat of a future release to the environment.*"

A HREC is "… *a past release of any hazardous substances or petroleum products that has occurred in connection with the property and has been addressed to the satisfaction of the applicable regulatory authority or meeting unrestricted use criteria established by a regulatory authority, without subjecting the property to any required controls (for example, property use restrictions, activity and use limitations, institutional controls, or engineering controls).*"

A CREC is a REC "… *resulting from a past release of hazardous substances or petroleum products that has been addressed to the satisfaction of the applicable regulatory authority (for example, as evidenced by the issuance of a no further action letter or equivalent, or meeting risk-based criteria established by regulatory authority), with hazardous substances or petroleum products allowed to remain in place subject to the implementation of required controls (for example, property use restrictions, activity and use limitations, institutional controls, or engineering controls).*"

This Phase I ESA report is intended to satisfy certain requirements for the conduct of "all appropriate inquiries" (AAI) as established by the United States Environmental Protection Agency (USEPA) in 2006.

1.2 Scope of Services

Geosyntec was authorized on 6 January 2015 by BonTerra Psomas (on behalf of LACFCD), to complete a Phase I ESA of the Site. The scope of services included:

- searching standard local, state, and federal environmental record sources within recommended ASTM search distances;
- reviewing available physiographic information including topographic, geologic, hydrologic, and hydrogeologic information;
- reviewing available records on known natural or industrial fires potentially posing a REC/CREC/HREC;
- reviewing historical aerial photographs;
- reviewing historical fire insurance maps;
- performing a Site reconnaissance;
- conducting an interview with the Site owner; and
- documenting the procedures, findings, opinions, and conclusions of the Phase I ESA in this report.

This work was completed in general accordance with ASTM Practice E 1527-13 with the limitations and exceptions described in Section 1.4 of this report. For the purposes of this Phase I ESA report, BonTerra Psomas and LACFCD are the "users," defined as "the party seeking to use Practice E 1527-13 to complete an *environmental site assessment* of the *property*…"

1.3 Limitations and Exceptions

This Phase I ESA is intended to reduce, but not eliminate, uncertainty regarding the potential for RECs, HRECs, and/or CRECs in connection with the Site. Not every property warrants the same level of assessment. Consistent with good commercial or customary practice, the appropriate level of assessment was guided by the type of property subject to assessment, the requirements of ASTM E 1527-13 pertaining to the satisfaction of EPA's All Appropriate Inquiry requirements, and the information developed in the course of the inquiry. A balance between the competing goals of limiting cost and time demands and the reduction of uncertainty about unknown conditions resulting from additional information was identified during the Phase I ESA.

Additional services considered optional by ASTM E 1527-13, such as asbestos-containing building materials, radon, lead-based paint, lead in drinking water, wetlands, regulatory compliance, cultural and historic resources, industrial hygiene, health and safety, ecological resources, endangered species, indoor air quality, biological agents, mold, and high voltage power lines, were not included in the scope of work (Table 2).

The findings and conclusions presented in this Phase I ESA report are the result of professional interpretation of the information collected at the time of this study. This Phase I ESA was not an exhaustive search of all available records, nor does it include

detailed assessment of all Phase I ESA findings. Geosyntec cannot "certify" or guarantee that any property is free of environmental impairment; no warranties regarding the environmental quality of the property are expressed or implied.

This Phase I ESA did not include the sampling of rock, soil, groundwater, surface water, soil vapor, air, or on-Site substances or materials. Therefore, it is not possible to confirm the presence or absence of hazardous substances or petroleum products in the environments associated with the Site.

The findings of this report, to the best of our knowledge, are valid as of the date of this work. However, changes in the conditions of a property can occur with the passage of time, whether due to natural processes or the works of man on this or adjacent properties. In addition, changes in applicable or appropriate regulations and standards may occur, whether they result from legislation, from the broadening of knowledge, or for other reasons. Accordingly, the findings of this report may be invalidated wholly or partially by changes outside our control.

Specified information contained in this report has been obtained from publicly available sources and other sources of information. Although care has been taken in compiling this information, Geosyntec disclaims any and all liability for any errors, omissions, or inaccuracies in such information and data.

The work was performed using the degree of care and skill ordinarily exercised under similar circumstances by environmental consultants practicing in this or similar localities. No other warranty or guarantee, expressed or implied, is made as to the findings, opinions, conclusions, and recommendations included in this report.

2. SITE AND VICINITY DESCRIPTION

2.1 Site Location and Description

The Site is located in the northern portion of the San Fernando Valley near the intersection of Devonshire Street and Arleta Avenue on the west side of the Pacoima Diversion Channel (Figure 1). The facility is bordered by Filmore Street to the southeast, Woodman Avenue to the west, San Jose Street to the north, and Arleta Avenue to the northeast and is approximately bisected by Devonshire Street. The Site includes an intake gate and canal that allow the flow of water into the 12 spreading basins where the water percolates into the groundwater (Figure 2). Equipment are stored and controlled in the structures located on northeast portion of the Site referred to as the headworks.

The Pacoima Spreading Grounds facility is one of the major water conservation facilities that recharge the San Fernando Groundwater Basin. The facility conserves water that is supplied by imported water, storm flows, and controlled releases from Pacoima Dam, partially controlled flow from Lopez Basin, and uncontrolled flows from East Canyon and Pacoima Wash [LACFCD, 2014].

2.2 Geoenvironmental Characteristics

2.2.1 Topography

The Site is located within the United States Geological Survey (USGS) San Fernando Quadrangle map.[2] The elevation of the Site varies from approximately 960 feet (ft) on the northeast portion to 910 ft above mean sea level (amsl) on the southwest portion [USGS 1995] where the average elevation of the Site is approximately 935 ft amsl. The general topographic gradient for the area is sloping towards the south-southwest [EDR, 2015].

2.2.2 Geology

The Site is located in northern San Fernando Valley, which is an east-west trending basin within the Transverse Ranges Geomorphic Province of Southern California. The geological structure of the Transverse Ranges is dominated by the effects of compressive deformation resulting in thrust faulting, strike-slip faulting, and bedrock

[2] Available for electronic download from *store.usgs.gov*. Additional information was obtained from an Environmental Data Resources Inc. (EDR) Historical Topographic Maps (Appendix A).

folding. The valley is bounded by the Verdugo, Santa Susana, and San Gabriel Mountains to the north and the Santa Monica Mountains to the south [LACDPW 2009].

The Site is located in the portion of the basin consisting of the sediments deposited by Pacoima Wash and Tujunga Wash. The sediments include sand, silt, gravel and clays that have formed during the weathering process [LACDPW, 2007].

Alluvium predominantly containing sand, silt and gravel was observed during previous subsurface investigations at the Site. The results of these investigations also identified a clay layer that appeared to dip south-southwest. The thickness of this clay layer was reported to vary from 3 to 10 ft. The depth to the top of the clay layer was observed to range from 5 to 15 ft below ground surface (bgs) and the maximum anticipated depth to the bottom of the clay was 19 ft bgs [LACDPW, 2007]. As this clay layer is anticipated to limit the vertical infiltration of recharge water in the basins, removal and replacement of this low permeable layer is within the Project scope.

2.2.3 Hydrogeology

The Site is one of the major water conservation facilities that recharge the San Fernando Groundwater Basin by allowing percolation of the runoff water into the basin. The San Fernando Groundwater Basin covers an area of about 175 square miles. Annual groundwater recharge at the Site is 6,900 acre-feet, which provides enough water for 13,800 families per year [LACDPW, 2014]. Other recharge sources of the San Fernando Groundwater Basin are the Tujunga and Hansen Spreading Grounds.

The San Fernando Groundwater Basin is documented to contain identified areas of groundwater contamination based on water quality analyses [DWR, 2003]. The primary contaminants identified are Volatile Organic Compounds (VOCs) including trichloroethylene (TCE) and tetrachloroethylene (PCE), which have been identified in shallow zones northeast of the Site and in the vicinity of the Site (Figures 3 and 4). These contaminants are documented to have existed in groundwater encountered at depths as shallow as 200 to 280 ft below ground surface (bgs) [EPA, 1998]. A number of investigations have identified other chemicals in groundwater such as petroleum compounds, chloroform, nitrate, sulfate, and heavy metals [Setmire 1985; ULARAW 1999]. TCE, PCE and nitrate contamination occurs in the eastern part of the basin and elevated sulfate concentration occurs in the western part of the basin [ULARAW, 1999].

In the vicinity of the Site the depth to groundwater fluctuated between 300 ft and 350 ft bgs between the years 2004 and 2008 and the historic high groundwater level is approximately 210 ft bgs [LACDPW, 2009]. Groundwater in the area flows in a south-southwest direction [Kleinfelder, 2003].

2.2.4 Surface Water Hydrology

The northeast extents of the Pacoima Wash subwatershed encompass parts of the Angeles National forest and the southwestern portions of the subwatershed include urban areas of the San Fernando Valley. The subwatershed drains mainly into the Pacoima Wash (Figure 5).

The Site is located on the southernmost section of the Pacoima Wash subwatershed on the Pacoima Wash. The Pacoima Wash flows in a northeast-southwest direction through the Pacoima Spreading Ground subwatershed, originating in the upper reaches of the San Gabriel Mountains. The Pacoima Wash passes through the Pacoima reservoir/dam and the Lopez reservoir/dam where sandy debris carried from the mountains and undeveloped hillsides by the wash is captured and contained in a debris basin. At the southern end of the debris basin, the Pacoima Wash is directed into a concrete-lined channel that travels southwest towards the headworks at the Site, through residential neighborhoods and industrial areas. At this point characteristics of the wash are significantly influenced by the surrounding urban land use due to receiving surface water discharges (Figure 6). Figure 6 also shows select surface water drainage features from the Los Angeles County storm drain system. As shown in Figure 6, Pacoima Wash inflows are mostly discharges from the urban areas to the north of the wash including the water that drains into the East Canyon Channel which joins the Pacoima Wash on the northeast of the Site. In this concrete-lined portion of the Pacoima Wash, trash and other miscellaneous debris are commonly observed alongside and within the wash. As the Pacoima Wash continues southwesterly, it is funneled into a square culvert under the I-5 Freeway and SR-118 interchange (Figure 7) where the East Canyon Channel (with a northwest-southeast oriented flow) joins the Pacoima Wash and continues to the Site [Creel et al., 2004]. The East Canyon Channel is a concrete drainage channel that serves as one of the major flood control facilities in the area. The channel follows San Fernando Road to the East of Los Angeles Reservoir and at about Rinaldi Street it flows southeasterly along the I-5 Freeway.

2.3 Current Site Uses and Descriptions of Structures

The Site is currently used as spreading grounds to recharge the San Fernando Groundwater Basin. The Site is approximately 169 acres and has a storage capacity of 530 acre-feet (AF). The Site includes the following facilities:

- radial intake gate;
- intake canal;
- equipment storage / control room structures;

- 12 spreading basins (Figure 7);
- maintenance roads;
- spillways; and
- overflow weir.

The water is diverted from the Pacoima Diversion Channel using the radial gate located on the northeast end of the Site (headworks). The water then flows over a weir, through the intake canal, passing through pipes under Arleta Avenue to the spreading basins. The water percolates to the groundwater basin at the spreading grounds. The radial gate is lifted out of the channel slightly to allow excess flows of water to undershoot the gate and travel down the Pacoima Diversion Channel during high stormwater flows.

2.4 Current Adjoining Property Uses and Descriptions of Structures

The Site is located to the west of the Pacoima Diversion Channel and it is generally bounded to the north, south, east, and west by single-family residential (Figure 7). Adjacent properties included: single-family residential to the north, south, east and west; some commercial uses to the south; Devonshire Arleta Park and a plant nursery to the east and Devonwood Park to the west.

3. USER PROVIDED INFORMATION

In accordance with ASTM Standard E 1527-13, Geosyntec requested that the User of the Phase I ESA provide information that would assist in identifying RECs in connection with the Site. Based on BonTerra Psomas' recommendation, Geosyntec contacted Mr. John Bodenchak, Associate Civil Engineer at the LACDPW. Mr. Bodenchak and his manager Mr. Ken Zimmer, Head of Water Conservation Planning Section, provided the following information:

3.1 Title Records

A title report for the Site was not reviewed for purposes of the Phase I ESA. The Site has been owned by the LACFCD since the 1930s.

3.2 Environmental Liens or Activity and Use Limitations

Mr. Zimmer was not aware of any chemical releases, environmental cleanup activities, environmental liens, or land use limitations associated with the Site.

3.3 Specialized Knowledge

Mr. Zimmer stated that he has specialized knowledge or experience related to the Site. He indicated that he has 18 years of experience in spreading grounds operations and design at the LACFCD.

3.4 Commonly Known or Reasonably Ascertainable Information

Mr. Zimmer stated that he has knowledge of the past uses of the Site and indicated that the Site has been used for water conservation since its construction in the 1930s.

Mr. Zimmer indicated that a gasoline storage tank was located at the headworks area of the Site (location of this tank is shown in Appendix G). He also stated that currently herbicide is used on the Site and that Ferric chloride was used previously to aid in settlement of fines during operation of the spreading grounds.

Mr. Zimmer did not have knowledge of spills, chemical releases, and environmental cleanups that may have taken place at the Site.

3.5 Owner, Property Manager, and Occupant Information

Mr. Zimmer stated that the LACFCD has owned the Site since its construction in the 1930s.

3.6 Reason for Performing This Phase I ESA

Geosyntec understands that BonTerra Psomas and the Los Angeles County Flood Control District have requested this Phase I ESA to support the CEQA process regarding an upcoming basin enhancement Project at the Site.

3.7 Valuation Reduction for Environmental Issues

Mr. Zimmer indicated that this item is not applicable since the LACFCD has owned the Site since its construction in the 1930s and the Site is not being sold.

3.8 Other User Provided Information

Mr. Zimmer stated that based on his knowledge and experience related to the Site there have been indicators that point to the presence or likely presence of contamination at the Site. He referred to the previous environmental reports indicating potential for contamination. These reports are discussed in Section 4.4.

4. RECORDS REVIEW

4.1 Standard Environmental Records Database Search

In accordance with ASTM E 1527-13, Geosyntec reviewed applicable and reasonably accessible federal, state, and local records as part of this Phase I ESA. The environmental records review was performed in the form of an environmental database search by EDR, in an attempt to ascertain whether the Site or neighboring properties were suspected of having environmental conditions with the potential to impact (or have impacted) the soil and/or groundwater at the Site.

The database search revealed 41 facilities (onsite, adjoining and offsite) included in regulatory agency lists of known or potential hazardous waste facilities, landfills, hazardous waste generators, and disposal facilities in addition to properties under investigation. The information provided in the EDR report (Appendix B) was obtained from publicly available sources. The locations of the properties listed in the EDR report are plotted with a geographic information system (GIS). Specific records and search distances for these environmental databases were reported by EDR to be consistent with ASTM E 1527-13 and are included in the EDR report presented as Appendix B.

The database search results were screened and summarized in Table 1 based on the following criteria:

- facilities within less than 1/8 mile from the Site boundary;
- facilities within 1/3 mile of the Site boundary with contaminated soil vapor (this is the "approximate minimum search distance" as defined by ASTM 2600-10 for non-petroleum hydrocarbon chemicals of concern in soil vapor); and
- facilities beyond the Site boundary, projected to be up gradient of the Site, and listed as having groundwater contamination.

Table 1 presents a summary of the records, with a brief description of the each record, associated databases and EDR map IDs. The following describes the records associated with potential impact on the Site due to the nature of the facilities operations and chemical substances involved.

4.1.1 Site and Adjoining Property Record Results

EDR's search of available "reasonably ascertainable" government records found numerous listings within the ASTM-specified search distances. The Site and properties adjoining the Site encompass 17 of the 41 listed facilities in the EDR report. Among

these facilities the following are identified with potential or limited potential impact on the Site:

1) Former underground storage tanks (Pacoima Spreading Grounds), located on-Site at 10450 Arleta Avenue (labeled "C" on the EDR Radius Map presented in Appendix B): Two records of underground storage tanks were found at this location; a historical record (dated 1990) and a recent record (dated 2010). The recent record indicates a 250-gallon tank. The tanks contained gasoline that was used for the backup generator at the Site. The location of these tanks was reported to be on the northeast portion of the Site. No leak was reported. The records were listed in CA FID UST, HIST UST, LOS ANGELES CO. HMS, and HAZNET. These underground tanks have also been identified by previous Phase I ESAs.

2) Closed solid waste landfill facility (San Fernando City Landfill), located at Sharp Avenue and Paxton Street (labeled "34" on the EDR Radius Map presented in Appendix B): The closed landfill is located less than 1/8 mile northeast of the Site. This record was found in WMUDS/SWAT database.

3) Small quantity generator of hazardous waste (Southern California Gas Co.), located less than 1/8 mile northeast of the Site at 14201 Paxton Street (labeled "31" on the EDR Radius Map presented in Appendix B): The facility is listed in RCRA-SQG. No releases or violations were reported.

4) Underground injection wells (Chevron U.S.A. Inc.), located less than 1/8 mile west of the Site (labeled "12" on the EDR Radius Map presented in Appendix B): This facility is listed in the California Oil and Gas Wells database. The records indicate directionally drilled wells at this location.

5) Leaking underground storage tank (Arco #1575, BP west Coast Production LLC), located at 14761 Devonshire Street (labeled "D" on the EDR Radius Map presented in Appendix B): This facility is located less than 1/8 mile west of the Site which reportedly affected the soil only. The case has been closed. The record is listed in LUST, HAZNET, ERNNS, and CA FID UST.

6) A facility located at 14600 San Jose, less than 1/8 mile north of the Site, was listed as a hazardous waste generator (labeled "24" on the EDR Radius Map presented in Appendix B). No releases or violations were reported. The record was found in HAZNET database.

4.1.2 Other Offsite Record Results

Of the 41 facilities reported within a 1-mile radius of the approximate Site boundary 24 were offsite (facilities that are neither within the Site boundary nor adjoining). The locations of these facilities are shown on the Overview Map and Detail Map in the EDR report (Appendix B).

Based on a review of these database listings three (3) of the facilities appear to have the potential to impact the Site soils or groundwater below the Site (see table 1).

4.1.3 Orphan Sites

In addition to the 41 facilities identified and mapped in the EDR report, an additional eight (8) offsite properties were identified by EDR search as orphan sites. However due to the long distance of these facilities to the Site they are unlikely to have adversely affected the Site.

4.2 Local Regulatory Agencies

Geosyntec contacted the following federal, state, and local agencies and requested reasonably ascertainable records for the Site from the following agencies:

- Department of Toxic Substances Control (DTSC);
- City of Los Angeles Public Works – Industrial Waste;
- South Coast Air Quality Management District (SCAQMD);
- Regional Water Quality Control Board (RWQCB);
- Los Angeles County Public Health Investigator;
- City of Los Angeles Fire Department (LAFD); and
- City of Los Angeles Building Department.

Geosyntec provided the aforementioned agencies with Site location information such as maps, street address (10450 Arleta Avenue) and parcel numbers at the time of request. The above agencies did not have records associated with the Site with the exception of the LAFD. A permit record for the removal of a 250-gallon unleaded gasoline dated 1 July 2014 was found in the LAFD records associated with 10450 N Arleta Avenue (the Site).

4.3 Historical Documentation Review

4.3.1 Historical Aerial Photographs and Topographic Maps

As part of this Phase I ESA, an aerial photograph and topographic map review was conducted. Historical USGS topographic maps for years 1896 to 1995 and aerial photographs from 1928 to 2012 were obtained from EDR and are provided in

Appendices A and D, respectively. Based on a review of these maps and photographs, a summary of the Site developments and historical use is as follows:

- The 1900 topographic map does not show structures in the immediate vicinity of the Site.
- In 1928 other than some man-made features to the northeast, the Site appears to be undeveloped for the most part. The Pacoima wash has formed a debris basin which is not bound by roads at this time.
- The 1938 aerial photograph shows that the wash has been channelized and initial construction of the spreading grounds has begun.
- In the 1952 aerial photograph the Site appears to be bound by roads and the Site configuration is visible.
- Devonshire Street appears on the 1976 aerial photograph and minor changes to the Site configuration are visible.
- In the 1989 aerial photograph the Site configuration appears very similar to the current configuration.
- Post 1989 minor modifications to the Site and a change in vegetation are noticeable.

4.3.2 Sanborn Fire Insurance Map Review

The Sanborn Library fire insurance maps were searched by EDR. The search results however indicated that Sanborn fire insurance maps covering the Site were not available.

4.3.3 City Directories

City Directories were searched by EDR for select years from 1920 to 2013 to assess occupancy at the Site and adjoining properties (Appendix F). The address associated with the headworks at the Site (10450 Arleta Avenue, Pacoima, California) was not identified in the city directories. The findings of the City Directories search however includes information corresponding to some of the adjoining properties mostly located on Devonshire Street near the western boundary of the Site.

4.4 Additional Environmental Record Sources

Geosyntec was provided with copies of prior environmental site assessment reports. The following lists the reports provided and a summary of relevant information:

- Prior Phase I ESA titled: "Pacoima Spreading Grounds, Phase I Site Assessment, Pacoima, California" conducted in May 2002 by Geotechnical and Materials Engineering Division of Los Angeles County Department of Public Works.
    - The report identifies a "moderate level of risk in terms of the potential presence of significant contamination problems resulting from hazardous materials, including petroleum hydrocarbons, as defined under applicable Federal and State environmental laws" due to close proximity of the closed San Fernando Landfill and an unnamed landfill to the northeast of the Site.
    - The report recommends that a Phase II Environmental Site Investigation be performed to evaluate the potential presence of environmental contamination at the Site.
- Prior Phase I ESA titled: "Phase I Environmental Site Assessment, Pacoima Spreading Grounds, 10450 Arleta Avenue, Pacoima, California" conducted in March 2003 by Kleinfelder.
    - The following RECs were identified:
        - potential presence of methane and other oil well related gases within subsurface soils at the Site due to the oil and gas wells located in the immediate vicinity of the Site;
        - potential landfill gases at the Site due to the former San Fernando Landfill referenced to be located at the intersection of Sharp Avenue and Paxton Street, northeast of the Site; and
        - observed oil staining northeast of the Site and south of the water diversion equipment with unknown subsurface impact.
    - The report indicates an on-Site 750-gallon septic tank on the northeast portion of the Site, at the headworks, that was installed in 1932. The septic tank is reportedly constructed with concrete and currently exists at the Site.

- The report recommends performing a soil gas survey to assess the potential impact from the closed landfill and the oil wells in addition to sampling soil at the oil stain to assess chemical impact to the subsurface.

- Prior Phase II ESA titled: "Report of Limited Subsurface Environmental Site Assessment, Pacoima Spreading Grounds Headworks, 10450 Arleta Avenue, Pacoima, California" conducted in April 2003 by Kleinfelder.
  - This assessment included the drilling of 30 borings and the collection of 40 soil samples for laboratory testing on the northeast portion of the Site, at the headworks.
  - The soil samples were analyzed for total petroleum hydrocarbons (gasoline, and diesel range), VOCs, total recoverable petroleum hydrocarbons, organochlorine pesticides, PCBs, California Title 22 metals and chlorinated herbicides.
  - VOCs, PCBs, herbicides and pesticides were not detected in soil samples.
  - Hydrocarbons were detected at concentrations ranging from 1.36 to 85.4 milligrams per kilogram (mg/kg). Petroleum hydrocarbons in soil were not vertically delineated.
  - With the exception of lead, concentrations of detected metals were below the U.S. EPA Residential Preliminary Remediation Goals (PRGs). Lead was detected in one sample at 5 ft bgs at a concentration of 155 (mg/kg). Based on this result the Waste Extraction Test (WET) was performed resulting in a concentration of 9.11 milligrams per liter. This concentration is greater than the Soluble Threshold Limit Concentration (STLC) used for hazardous waste classification.
  - A soil gas survey was also recommended depending on the future uses of the Site.

5. SITE RECONNAISSANCE AND INTERVIEWS

5.1 Methodology and Limiting Conditions

Geosyntec conducted a reconnaissance of the Site on 2 February 2015 to assess the environmental conditions on and around the Site. Mr. John Bodenchak, LACDPW's Associate Civil Engineer, provided escort during the Site reconnaissance and provided access to the Site and associated facilities. Mr. Bodenchak has worked for the LACDPW for about seven (7) years and particularly on the Site for about four (4) years. Mr. Octaviano Fernandez, Flood Control Construction Supervisor, was also present during the Site reconnaissance.

As part of the Site reconnaissance, Geosyntec looked for evidence regarding hazardous substances use, storage, or disposal at and in the vicinity of the Site. Moreover, Geosyntec evaluated the Site for areas of disturbed or discolored soil, suspect equipment, which may contain hazardous substances, areas of distressed vegetation, wastewater discharge areas, storage tanks/septic systems, waste management/disposal areas, lagoons, pits, sumps, surface water management areas, and stained surfaces.

Adjoining properties were observed from the perimeter of the Site or via access roads. Select photographs taken during the Site reconnaissance are presented in Appendix G.

5.2 General Site Setting

5.2.1 Current Use of the Site

At the time of Geosyntec's performance of this Phase I ESA, the Site consisted of a northeastern area known as the "headworks" in the vicinity of the intake canal where water diversion equipment, office/supply structures, and a gate operation structure were located. The radial gate at the headworks is used to divert the water from Pacoima Diversion Channel to the spreading grounds. The spreading basins were situated to the southwest of the headworks and comprised the majority of the Site area. This is where the runoff water percolates into the basin soils and recharges the groundwater.

5.2.2 Current Use of Adjoining Properties and the Surrounding Area

The area surrounding the Site is mostly residential. However, two parks, the Devonshire Arleta and Devonwood parks are located on the east and west side of the Site, respectively. A plant nursery and a vacant triangular shaped gravel padded area are located to the northeast of the Site. According to previous ESAs and Mr. Bodenchak this vacant area is where the oil and gas wells were previously located.

The closed San Fernando City Landfill is located on Sharp Avenue and Paxton Street, across from the headworks at the Site.

5.3 Observations

5.3.1 Hazardous Substances and Petroleum Products

Geosyntec observed a hazardous materials storage container kept at the northeast corner of the Site. The LACDPW personnel described the stored materials as paint. The container was closed and no significant evidence of staining or spills was observed.

Two 250-gallon underground storage tanks used for the backup generator were formerly located in the headworks area near the generator. According to Mr. Octaviano these tanks have been removed from the Site. The previous location of the underground tanks is shown in Appendix G.

The area where the oil and gas wells previously located off-Site to the northeast of the headworks was visited and it appeared to be mostly covered with gravel.

No other hazardous substances or petroleum products were observed during the Site reconnaissance.

5.3.2 Storage Tanks

No evidence of existing underground or aboveground storage tanks was observed during the Site reconnaissance. The location of a previously existing underground storage tank however was noted.

5.3.3 Odors

No strong, pungent, or noxious odors were observed at the Site during the Site reconnaissance.

5.3.4 Pools of Liquid

Pools of liquid were not observed at the Site (other than the residual water in the designated intake canal) during the Site reconnaissance.

5.3.5 Drums or Containers and Unidentified Substances/Containers

Drums were not observed at the Site at the time of Geosyntec's Site reconnaissance. However, Mr. Bodenchak indicated that chemical coagulants (ferric chloride) were previously used at the spreading grounds to aid in settlement of fines.

5.3.6 Indications of Polychlorinated Biphenyls (PCBs)

During the Site visit, Geosyntec did not observe transformers on-Site, however, lighting ballast was observed in lighting fixtures. Lighting ballast installed prior to 1979 may contain small amounts of PCBs and should be disposed of properly when eventually discarded.

5.3.7 Heating and Cooling System

A Heating Ventilation and Cooling (HVAC) system was observed in a small control room structure at the headworks.

5.3.8 Stains or Corrosion

Geosyntec did not observe significant areas of ground staining at the time of the Site reconnaissance. However some degree of corrosion was observed in the intake canal.

5.3.9 Drains and Sumps

Geosyntec did not observe drains or sumps at the time of the Site reconnaissance.

5.3.10 Pits, Ponds, and Lagoons

Only pits, ponds and lagoons associated with the spreading ground activities were observed. No evidence of hazardous materials was observed during the Site reconnaissance.

5.3.11 Stained Soil or Pavement

Geosyntec did not observe significantly stained soil or pavement at the subject Site.

5.3.12 Stressed Vegetation

No stressed vegetation was observed at the Site during the Site reconnaissance.

5.3.13 Solid Waste

No evidence of filled areas was observed. However some solid waste (mostly trash, tires, etc.) was observed near the perimeter fences and within the spreading grounds. No evidence of illicit dumping of potentially hazardous substances was noted during the Site reconnaissance.

The location of the closed San Fernando City Landfill located off-Site was visited and the area appeared to be covered by vegetation.

5.3.14 Wastewater or Stormwater Discharge

No evidence of onsite storm drains or other wastewater discharge was observed during the Site reconnaissance. The Pacoima Wash that drains to the Site however carries stormwater discharges from the surrounding area.

5.3.15 Wells

Piezometers were observed around the spreading grounds that are used to measure the depth to water.

5.3.16 Septic Systems

While no evidence of septic systems was observed during the reconnaissance, Mr. Bodenchak described a 750-gallon septic tank that was installed in the northeastern portion of the Site in 1932.

6. INTERVIEWS

6.1 Interview of Property Owner

On 2 February 2015 Geosyntec interviewed Mr. John Bodenchak, Associate Civil Engineer and Mr. Octaviano Fernandez, Flood Control Construction Supervisor. During the interview, questions were asked regarding Site use and conditions, typical of a Phase I ESA interview in accordance with ASTM E 1527-13.

Mr. Bodenchak indicated that currently a hazardous materials storage container is kept at the northeast corner of the Site. According to Mr. Bodenchak the container only holds cans of paint that is used to clean up graffiti. Mr. Bodenchak also stated that pesticides and herbicides are applied to the grounds. Mr. Fernandez indicated that an underground storage tank that contained gasoline and was used to fuel the backup generator was removed from the Site more than a year ago.

Mr. Bodenchak and Mr. Fernandez did not have knowledge of any other hazardous materials/waste.

On 5 February 2015 Mr. Ken Zimmer, Head of Water Conservation Planning Section also provided information regarding current use of herbicides and previous use of ferric chloride (to aid settlements of fines at the spreading grounds) at the Site. Mr. Zimmer indicated that an underground storage tank containing gasoline was previously located at the Site (on the northeast portion at the headworks).

6.2 Interview with Others

No other interviews were conducted as part of this Phase I ESA.

7. EVALUATION

7.1 Findings and Opinions

Based on the information identified and reviewed, other key findings of the Phase I ESA include:

- The Site includes the southernmost portions of the Pacoima Spreading Grounds subwatershed and is located in the northern portion of the San Fernando Valley near the intersection of Devonshire Street and Arleta Avenue, Los Angeles, California.

- The Site facilitates the groundwater basin recharge by receiving the Pacoima Wash water and spreading in through the basins allowing for water percolation through the spreading grounds.

- Two (250-gallon) underground storage tanks containing gasoline were located on-Site at 10450 Arleta Avenue (northeast portion of the Site). These tanks have reportedly been removed from the Site.

- The closed San Fernando City Landfill is located adjacent to the northeast portion of the Site and the intake canal. Landfill gas migration from the closed landfill to the Site is a potential concern.

- Oil and gas wells were previously in operation adjoining the Site.

- A septic tank is reportedly located on the northeast portion of the Site (near the east-central portion of the headworks). This 750-gallon tank was installed in 1932 and was constructed with concrete.

- Kleinfelder conducted soil sampling and testing on the northeast portion of the Site (at the headworks). The testing resulted in detection of hydrocarbons at concentrations ranging from 1.36 to 85.4 (mg/kg). These concentrations are well below the general accepted action level; however petroleum hydrocarbons in soil were not vertically delineated. Lead was also detected in one sample at 5 ft bgs at a concentration of 155 (mg/kg). Additional soil analytical (i.e., WET test) results indicated a lead concentration of greater than the STLC used for hazardous waste classification.

- Underground injection wells have been recorded to be located west of the Site. These wells are listed in California Oil and Gas Wells database and are reported to have been abandoned [DOGGR, 2015].

7.2 Conclusions

Geosyntec has performed a Phase I ESA of the Site, located in the northern portion of the San Fernando Valley near the intersection of Devonshire Street and Arleta Avenue, Los Angeles, California, in conformance with the scope and limitations of ASTM Practice E1527-13. Any exceptions to, or deletions from this practice, are described in Sections 1, and 7.3 of this report. This assessment has revealed evidence of recognized environmental conditions RECs in connection with the Site as follows:

- Potential migration of gases: The closed San Fernando City Landfill, and the abandoned oil and gas wells located adjacent to the Site (northeast of the Site) are potential sources of gas migration to the Site.

- Previous subsurface investigations: Petroleum hydrocarbons and lead were detected during previous subsurface investigations on the northeast portion of the Site. Hydrocarbons concentrations ranged from 1.36 to 85.4 (mg/kg). Petroleum hydrocarbons in soil were not vertically delineated. WET test results indicated a lead concentration of greater than the STLC used for hazardous waste classification.

- Underground storage tanks: Two (250-gallon) underground storage tanks containing gasoline that were located on-Site at 10450 Arleta Avenue (northeast portion of the Site) may be associated with potential impact to the Site. Soil sampling and testing at this location following removal of the tank in 2014 has not been performed / reported.

7.3 Data Gaps

In accordance with ASTM E1527-13, this section documents data gaps in the information obtained and reviewed as part of this Phase I ESA and discusses the associated significance. A data gap is defined in ASTM E1527-13 as being "… *a lack of or inability to obtain information required by this practice despite good faith efforts by the environmental professional to gather such information*". The only data gap in this environmental site assessment is the records requested from the City of Los Angeles Fire Department Plan Check and Underground Storage Tank Division. At the time of this report Geosyntec had not received any records from this agency.

7.4 Exceptions and Deviations

In performance of this Phase I ESA, Geosyntec has not identified potential exceptions or deviations from the ASTM E 1527-13 standard of practice except where noted.

7.5 Qualifications of Environmental Professionals

This Phase I Environmental Site Assessment was performed by Dr. Zahra Amini and Mr. Brian Cozzens of Geosyntec. The Phase I ESA was performed under the oversight of Mr. Eric Smalstig P.E., and Mr. Mike Reardon, P.E. Mr. Reardon and Mr. Smalstig are Environmental Professionals as defined by the ASTM E1527-13 standard. As lead reviewer, Mr. Reardon's professional qualifications are provided in Appendix H.

7.6 Signature by Environmental Professionals

We declare, that to the best of our professional knowledge and belief, we meet the definition of Environmental Professional as defined in §312.10 of 40 CFR §312.

We have the specific qualifications based on education, training, and experience to assess a property of the nature, history, and setting of the Site. We have developed and performed the all appropriate inquiries in conformance with the standards and practices set forth in 40 CFR Part 312.

Signed by: Mike Reardon, P.E. – Associate

Signed by: Eric Smalstig, P.E. – Principal

8. REFERENCES

American Society for Testing and Materials, 2013. ASTM E 1527-13 Standard Practice for Environmental Site Assessments: Phase I Environmental Site Assessment Process. Philadelphia, PA.

American Society for Testing and Materials, 2013. ASTM E 2600-10 Standard Guide for Vapor Encroachment Screening on Property Involved in Real Estate Transactions. Philadelphia, PA.

Creel, J., Fitzsimmons, I., Gollong, L., and Neyman, L., 2004. Pacoima Wash Greenway Master Plan, Department of Landscape Architecture, California State Polytechnic University, Pomona.

Department of Water Resources (DWR) State of California, 2003. California's Groundwater, Bulletin 118.

Division of Oil, Gas and Geothermal Resources (DOGGR), 2015. http://maps.conservation.ca.gov/doggr, [Accessed February 2015]

Environmental Data Resources, Inc. (EDR), 2015. Pacoima Spreading Grounds, Intersection of Devonshire Street and Arleta Ave., Mission Hills, Los Angeles, CA, Inquiry Number: 4185299.2s, 19 January.

Environmental Protection Agency (EPA), 1998. San Fernando Valley Basin TCE Contamination in Shallow Zone in 1998 (map). http://yosemite.epa.gov/, [Accessed January 2015]

Kleinfelder, Inc., 2003. Phase I Environmental Site Assessment, Pacoima Spreading Grounds, 10450 Arleta Avenue, Pacoima, California.

Kleinfelder, Inc., 2003. Report of limited Subsurface Environmental Site Assessment, Pacoima Spreading Grounds Headworks, 10450 Arleta Avenue, Pacoima, California.

Los Angeles County Department of Public Works (LACDPW), Geotechnical and Materials Engineering Division, 2002. Pacoima Spreading Grounds, Phase I Site Assessment, Pacoima, California, dated May 2, 2002.

Los Angeles County Department of Public Works (LACDPW) Subsurface Investigations, 2007. Pacoima Spreading Grounds, Arleta and Mission Hills, City of Los Angeles, California

Los Angeles County Department of Public Works (LACDPW), 2009. Geologic Investigation, Pacoima Spreading Grounds, Arleta and Mission Hills, City of Los Angeles, California.

Los Angeles County Department of Public Works (LACDPW), 2014. Pacoima Spreading Grounds, Basin Enhancement Project. http://dpw.lacounty.gov/wrd/Projects/PacoimaSG/PacoimaSG-Fact-Sheet.pdf [Accessed January 2015]

Los Angeles County Flood Control District (LACFCD), 2014. Draft Initial Study Checklist, Pacoima Spreading Grounds, Improvement Project, Pacoima, CA

Setmire J.G., 1985. A Conceptual Groundwater-Quality Monitoring Network for San Fernando Valley, California. U.S. Geological Survey Water Resources Investigations Report 84-4128.

State of California, Water Control Board, GeoTracker Database: http://geotracker.waterboards.ca.gov/ [Accessed January 2015]

Upper Los Angeles River Area Watermaster (ULARAW), 1999. Watermaster Service in the Upper Los Angeles River Area, Los Angeles County; 1997-98 Water Year; October 1, 1997 – September 30, 1998. Los Angeles California.

TABLES

TABLE 1

SUMMARY OF RECORDS REVIEW
PHASE I ENVIRONMENTAL SITE ASSESSMENT
PACOIMA SPREADING GROUNDS, LOS ANGELES, CALIFORNIA

Site Name and Address	EDR Map ID	Direction (relative to Site center)	Databases	Summary/Opinion
within or less than 1/8 mile from the Site boundary				
Pacoima Wash – Pacoima Spreading Grounds 10450 Arleta Ave	C	Northeast	CA FID UST HIST UST LOS ANGELES CO. HMS HAZNET	No leak detected. Identified as a potential REC.
San Fernando City Landfill Sharp Ave and Paxton	34	Northeast	WMUDS/SWAT	Facility is a waste management unit located upgradient from the Site center. Identified as a potential REC.
Southern California Gas Co. 14201 PAXTON ST	31	Northeast	RCRA-SQG	Facility listed as small quantity generator. No violations found. Facility is upgradient from Site center.
14661 San Jose	B	North	ERNS	Facility is upgradient from Site center.
Arco #1575 BP West Coast Products LLC 015 786 Venture Inc. Fazelrahman Tajar/ Ata. U Rahma H Haghighi/M Jahangir 14761 Devonshire st	A/D	West	ERNS LUST UST HAZNET RGA LUST CA FID UST HIST UST EDR US Hist Auto Stat	Leak reported. Case closed in 2004. Facility is downgradient from Site Center.
Broker Hazmat Disposal Inc. 14839 SAN JOSE ST	33	Northwest	RCRA NonGen / NLR	No violations found. Facility is crossgradient from the Site center.
Chevron U.S.A. Inc.	12/A14	Northwest	UIC	Listed in California Oil and Gas Wells database. Facility is downgradient from the Site center.
Clarita Capellini 14670 San Jose St.	B4	North	HAZNET	Facility is upgradient from the Site center. No violations found.

Site Name and Address	EDR Map ID	Direction (relative to Site center)	Databases	Summary/Opinion
Nellie Loya 14626 Hiawatha St.	13	North	HAZNET	No violations found. Facility is upgradient from the Site center.
Motchell Marciales 10541 Lev Ave	20	Northeast	HAZNET	Asbestos containing waste reported. Facility is upgradient from the Site center.
Mike Marr 14600 San Jose	24	North	HAZNET	Unspecified organic liquid mixture reported. Facility is upgradient from the Site center.
10540 Arleta Ave	25	Northeast	EDR US Hist Auto Stat	No violations found. Facility is upgradient from the Site center.
10529 Cedros Ave	32	North	EDR US Hist Auto Stat	Facility is upgradient from the Site center.
Chevron Service 14800 Devonshire	17	West	EDR US Hist Auto Stat	Facility is downgradient from the Site center.
14805 Devonshire	A19	West	EDR US Hist Auto Stat	Facility is downgradient from the Site center.
14512 San Jose St.	26	North	EDR US Hist Cleaners	Facility is upgradient from the Site center.
10729 Sharp Ave.	35	Northeast	EDR US Hist Cleaners	Facility is upgradient from the Site center.
10100 Woodman Ave.	16	Southwest	EDR US Hist Cleaners	Facility is downgradient from the Site center.
less than 1/3 mile of the Site boundary with contaminated soil vapor				
None was found.				
beyond the Site boundary with groundwater contamination				
San Fernando Valley (Area 1) North Hollywood	0	Northeast	NPL	This is a Federal Superfund site and is listed on the National Priorities List (NPL). Facility is upgradient from the Site Center.

Site Name and Address	EDR Map ID	Direction (relative to Site center)	Databases	Summary/Opinion
American Etching and Manufacturing 13730 Desmond St.	H62	Northeast	RCRA –LQG LUST CORRACTS SLIC (open-Inactive) WIP HAZNET HWP WDS	Leak reported. Facility Has Received Notices of Violations. Violation lead agency is EPA. Facility listed as LUST cleanup site. Facility status is open-inactive in 2014. Facility is upgradient from the Site Center.
Price Pfister Inc. 13500 Paxton St. Pacoima, CA 91331	66	Northeast	LUST SLIC WIP EMI ENVIROSTOR CA WDS	Facility SLIC status in 2010: Open-Remediation. Facility WIP status: Active. Heavily contaminates soils. VOC's reported. Facility is upgradient from the Site Center.

TABLE 2

DETAILED SCOPE ELEMENTS PER ASTM E1527-13
PHASE I ENVIRONMENTAL SITE ASSESSMENT
PACOIMA SPREADING GROUNDS, LOS ANGELES, CALIFORNIA

SCOPE ELEMENT	ASTM E-1527-13 Reference	INCLUDED ?
RECORDS REVIEW	**8.0**	- -
Standard Environmental Record Sources (radii of search 0.5/1.0 miles)	**8.2.1**	- -
Federal NPL site list	8.2.1	Yes
Federal Delisted NPL site list	8.2.1	Yes
Federal CERCLIS list	8.2.1	Yes
Federal CERCLIS NFRAP site list	8.2.1	Yes
Federal RCRA CORRACTS facilities list	8.2.1	Yes
Federal RCRA non-CORRACTS TSD facilities list	8.2.1	Yes
Federal RCRA generators list	8.2.1	Yes
Federal institutional control/engineering control registries	8.2.1	Yes
Federal ERNS list	8.2.1	Yes
State and tribal lists of hazardous waste sites identified for investigation or remediation: State- and tribal-equivalent NPL	8.2.1	Yes
State and tribal lists of hazardous waste sites identified for investigation or remediation: State- and tribal-equivalent CERCLIS	8.2.1	Yes
State and tribal landfill and/or solid waste disposal site lists	8.2.1	Yes
State and tribal leaking storage tank lists	8.2.1	Yes
State and tribal registered storage tank lists	8.2.1	Yes
State and tribal institutional control/engineering control registries	8.2.1	Yes
State and tribal voluntary cleanup sites	8.2.1	Yes
State and tribal Brownfield sites	8.2.1	Yes
Additional Environmental Record Sources	**8.2.3**	- -
Types of Records	8.2.3	- -
Local Brownfield Lists	8.2.3	Yes
Local Lists of Landfill/Solid Waste Disposal Sites	8.2.3	Yes
Local Lists of Hazardous Waste/Contaminated Sites	8.2.3	Yes
Local Lists of Registered Storage Tanks	8.2.3	Yes
Local Land Records (for activity and use limitations)	8.2.3	No
Records of Emergency Release Reports (42 U.S.C. 11004)	8.2.3	No
Records of Contaminated Public Wells	8.2.3	No
Sources	8.2.3	- -
Department of Health/Environmental Division	8.2.3	Yes
City Fire Department	8.2.3	Yes
Planning Department	8.2.3	Yes
Building Permit/Inspection Department	8.2.3	Yes
Local/Regional Pollution Control Agency	8.2.3	Yes
Local/Regional Water Quality Agency	8.2.3	No
Local Electric Utility Companies (for records relating to PCBs)	8.2.3	No
Physical Setting Sources	**8.2.4**	- -

SCOPE ELEMENT	ASTM E-1527-13 Reference	INCLUDED ?
Mandatory Standard Physical Setting Source	8.2.4	- -
USGS – Current 7.5 Minute Topographic Map (or equivalent)	8.2.4	Yes
Discretionary and Non-Standard Physical Setting Sources	8.2.4	- -
USGS and/or State Geological Survey – Groundwater Maps	8.2.4	No
USGS and/or State Geological Survey – Bedrock Geology Maps	8.2.4	No
USGS and/or State Geological Survey – Surficial Geology Maps	8.2.4	No
Soil Conservation Service – Soil Maps	8.2.4	No
Other Physical Setting Sources that are reasonably credible	8.2.4	No
Standard Historical Sources	**8.3.4**	- -
Aerial Photographs (review of one source of air photo)	8.3.4.1	Yes
Fire Insurance Maps (such as Sanborn maps)	8.3.4.2	Yes
Property Tax Files	8.3.4.3	No
Recorded Land Title Records	8.3.4.4	No
USGS Topographic Maps (other than requirement of 8.2.3)	8.3.4.5	No
Local Street Directories	8.3.4.6	Yes
Building Department Records	8.3.4.7	No
Zoning/Land Use Records	8.3.4.8	No
Other Historical Sources	8.3.4.9	No
SITE RECONNAISSANCE	**9.0**	- -
General Site Setting	**9.4.1**	- -
Current Use(s) of the Property	9.4.1.1	Yes
Past Use(s) of the Property	9.4.1.2	Yes
Current Uses of Adjoining Properties	9.4.1.3	Yes
Past Uses of Adjoining Properties	9.4.1.4	Yes
Current or Past Uses in the Surrounding Area	9.4.1.5	Yes
Geologic, Hydrogeologic, Hydrologic, and Topographic Conditions	9.4.1.6	Yes
General Description of Structures	9.4.1.7	Yes
Roads	9.4.1.8	Yes
Potable Water Supply	9.4.1.9	Yes
Sewage Disposal System	9.4.1.10	Yes
Interior and Exterior Observations	**9.4.2**	- -
Current Use(s) of the Property	9.4.2.1	Yes
Past Use(s) of the Property	9.4.2.2	Yes
Hazardous Substances and Petroleum Products in Connection with Identified Uses	9.4.2.3	Yes
Storage Tanks	9.4.2.4	Yes
Odors	9.4.2.5	Yes
Pools of Liquid	9.4.2.6	Yes
Drums	9.4.2.7	Yes
Hazardous Substance and Petroleum Products Containers (not necessarily in connection with identified uses)	9.4.2.8	Yes
Unidentified Substance Containers	9.4.2.9	Yes
PCBs	9.4.2.10	Yes
Interior Observations	**9.4.3**	- -

SCOPE ELEMENT	ASTM E-1527-13 Reference	INCLUDED ?
Heating/Cooling	9.4.3.1	Yes
Stains or Corrosion	9.4.3.2	Yes
Drains and Sumps	9.4.3.3	Yes
Exterior Observations	**9.4.4**	**- -**
Pits, Ponds or Lagoons	9.4.4.1	Yes
Stained Soil or Pavement	9.4.4.2	Yes
Stressed Vegetation	9.4.4.3	Yes
Solid Waste	9.4.4.4	Yes
Waste Water	9.4.4.5	Yes
Wells	9.4.4.6	Yes
Septic Systems	9.4.4.7	Yes
INTERVIEWS WITH (PAST AND) PRESENT OWNERS AND OCCUPANTS(1)	**10.0**	**YES**
INTERVIEWS WITH STATE AND/OR LOCAL GOVERNMENT OFFICIALS	**11.0**	**- -**
State and/or Local Agency Officials	**11.5.1**	**- -**
Local Fire Department that Serves the Property	11.5.1.1	No
State and/or Local Health Agency or Local/Regional Office of State Health Agency Serving the Area in Which the Property is Located	11.5.1.2	No
State and/or Local Agency or Local/Regional Office of State Agency having Jurisdiction over Hazardous Waste Disposal or Other Environmental Matters in the Area in which the Property is Located	11.5.1.3	No
Local Agencies Responsible for the Issuance of Building Permits or Groundwater Use Permits that Document the Presence of AULs which may Identify a Recognized Environmental Condition in the Area in which the Property is Located.	11.5.1.4	No
EVALUATION AND REPORT PREPARATION	**12.0**	**YES**
NON-SCOPE CONSIDERATIONS(2)	**13.0**	**- -**
Asbestos-Containing Building Materials	13.1.5.1	No
Radon	13.1.5.2	No
Lead-Based Paint	13.1.5.3	No
Lead in Drinking Water	13.1.5.4	No
Wetlands	13.1.5.5	No
Regulatory Compliance	13.1.5.6	No
Cultural and Historical Resources	13.1.5.7	No
Industrial Hygiene	13.1.5.8	No
Health and Safety	13.1.5.9	No
Ecological Resources	13.1.5.10	No
Endangered Species	13.1.5.11	No
Indoor Air Quality	13.1.5.12	No
Biological Agents	13.1.5.13	No
Mold	13.1.5.14	No

Notes: (1) Contact information for previous and current owner(s) to be provided to Geosyntec.
(2) Will be performed at an additional cost if other research indicates a potential issue may exist.

FIGURES

Site Location
Pacoima Spreading Grounds
Los Angeles, CA

3,000 1,500 0 3,000 6,000 Feet

Geosyntec consultants

Figure 1

Project No: HR1507 | February 2015

S:\GIS\HR1507\Project\PSG_SiteLoc.mxd cc 2/9/2015

Site Plan
Pacoima Spreading Grounds
Los Angeles, CA

600 300 0 600 1,200 Feet

Geosyntec consultants

Figure 2

Project No:

February 2015

S:\GIS\HR1507\Project\PSG_SiteMap.mxd cc 2/9/2015

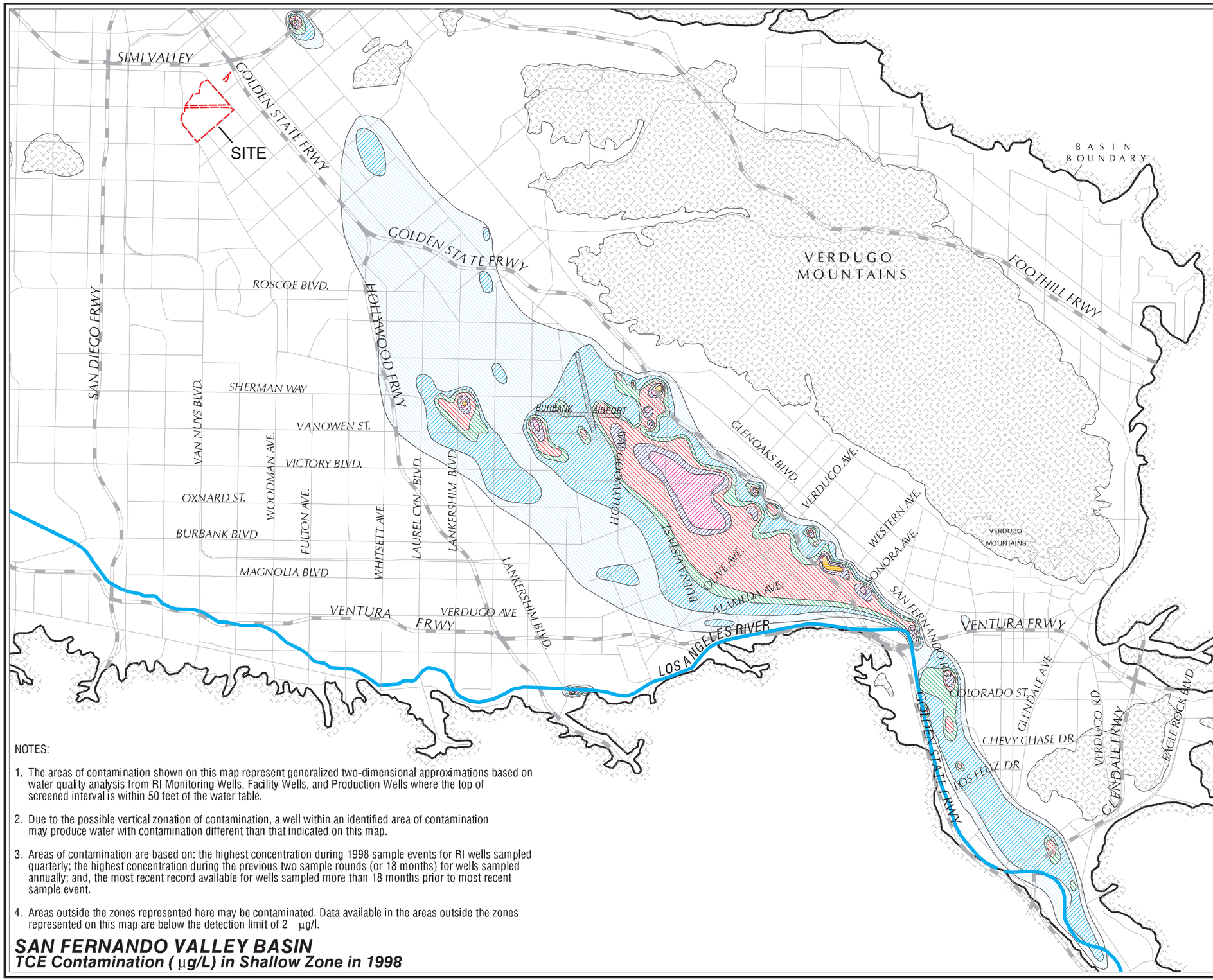

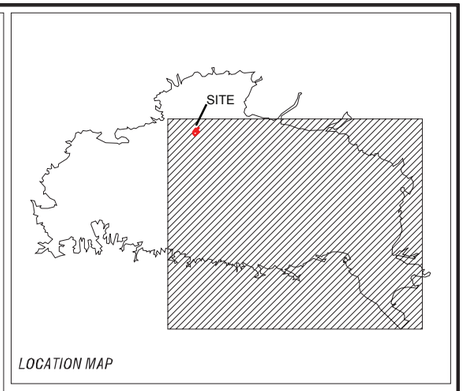

LEGEND

- > ND - 5 µg/L (MCL)
- 5.01 - 50 µg/L
- 50.01 - 100 µg/L
- 100.01 - 500 µg/L
- 500.01 - 1000 µg/L
- 1000.01 - 5000 µg/L
- Above 5000 µg/L

N W E S

NOTES:

1. The areas of contamination shown on this map represent generalized two-dimensional approximations based on water quality analysis from RI Monitoring Wells, Facility Wells, and Production Wells where the top of screened interval is within 50 feet of the water table.
2. Due to the possible vertical zonation of contamination, a well within an identified area of contamination may produce water with contamination different than that indicated on this map.
3. Areas of contamination are based on: the highest concentration during 1998 sample events for RI wells sampled quarterly; the highest concentration during the previous two sample rounds (or 18 months) for wells sampled annually; and, the most recent record available for wells sampled more than 18 months prior to most recent sample event.
4. Areas outside the zones represented here may be contaminated. Data available in the areas outside the zones represented on this map are below the detection limit of 2 µg/l.

SAN FERNANDO VALLEY BASIN
TCE Contamination (µg/L) in Shallow Zone in 1998

San Fernando Valley Basin
TCE Contamination
Los Angeles, CA

0 3500 7000 14000
FEET

Geosyntec consultants

FIGURE
3

Project No: HR1507 | February 2015

d:/projects/sfplume/maps/small/plotplm.aml
20 Feb 99 13:33:03 Saturday

S:\GIS\HR1507\AI\SanFernandoValleyBasin-PCEContamination_AI.ai

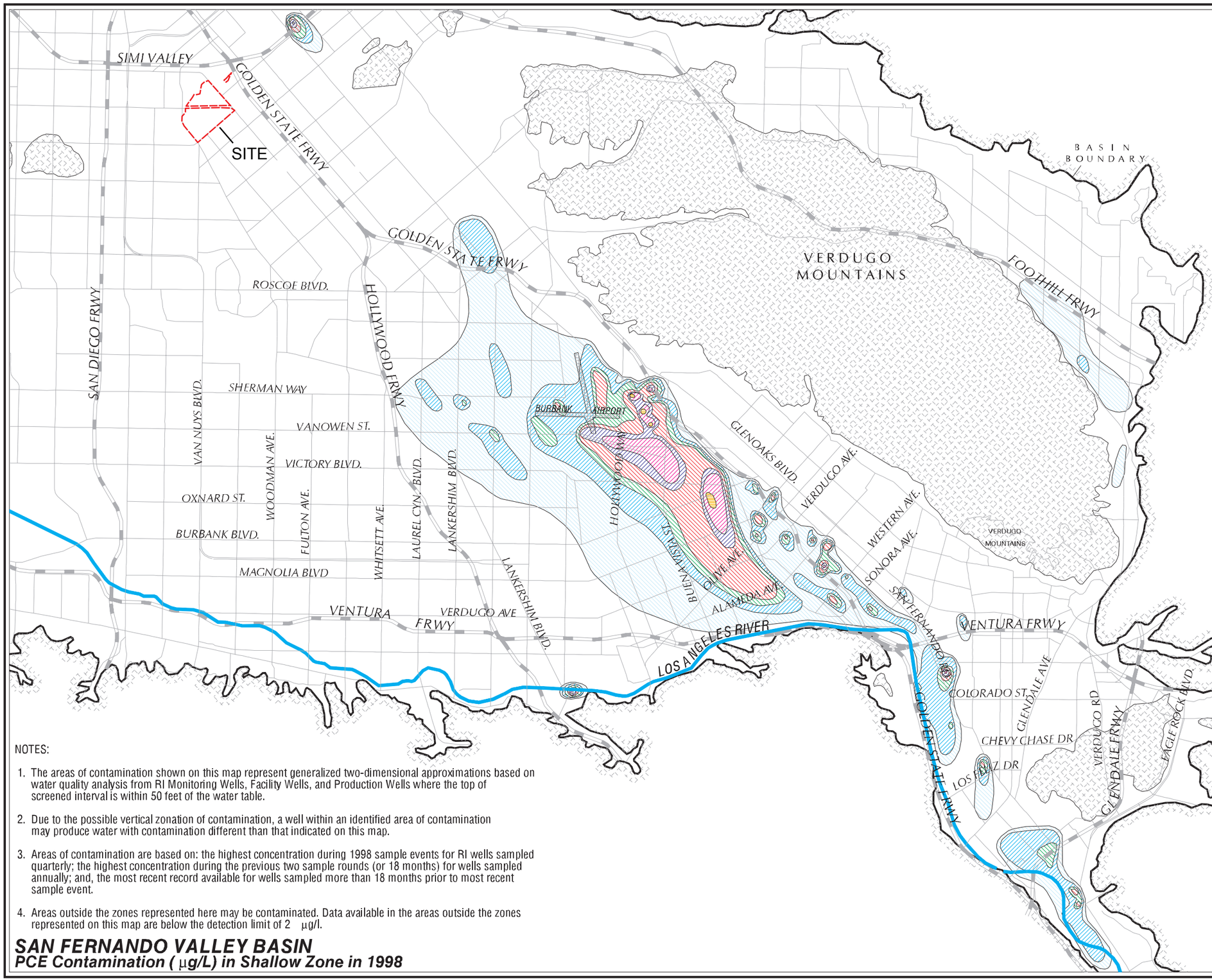

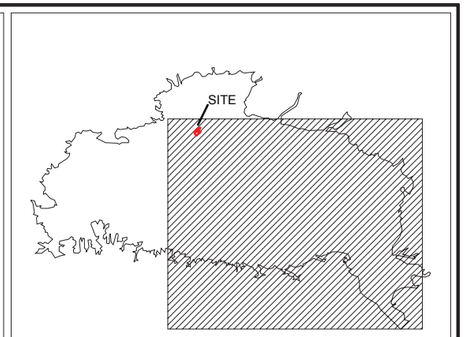

LOCATION MAP

LEGEND

- > ND - 5 µg/l (MCL)
- 5.01 - 50 µg/l
- 50.01 - 100 µg/l
- 100.01 - 500 µg/l
- 500.01 - 1000 µg/l
- 1000.01 - 5000 µg/l
- Above 5000 µg/l

N W E S

NOTES:

1. The areas of contamination shown on this map represent generalized two-dimensional approximations based on water quality analysis from RI Monitoring Wells, Facility Wells, and Production Wells where the top of screened interval is within 50 feet of the water table.
2. Due to the possible vertical zonation of contamination, a well within an identified area of contamination may produce water with contamination different than that indicated on this map.
3. Areas of contamination are based on: the highest concentration during 1998 sample events for RI wells sampled quarterly; the highest concentration during the previous two sample rounds (or 18 months) for wells sampled annually; and, the most recent record available for wells sampled more than 18 months prior to most recent sample event.
4. Areas outside the zones represented here may be contaminated. Data available in the areas outside the zones represented on this map are below the detection limit of 2 µg/l.

SAN FERNANDO VALLEY BASIN
PCE Contamination (µg/L) in Shallow Zone in 1998

San Fernando Valley Basin
PCE Contamination
Los Angeles, CA

0 3500 7000 14000
FEET

Geosyntec consultants

FIGURE 4

Project No: HR1507 | February 2015

d:/projects/sfplume/maps/small/plotplm.aml
20 Feb 99 13:34:57 Saturday

S:\GIS\HR1507\AI\SanFernandoValleyBasin-TCEContamination_AI.ai

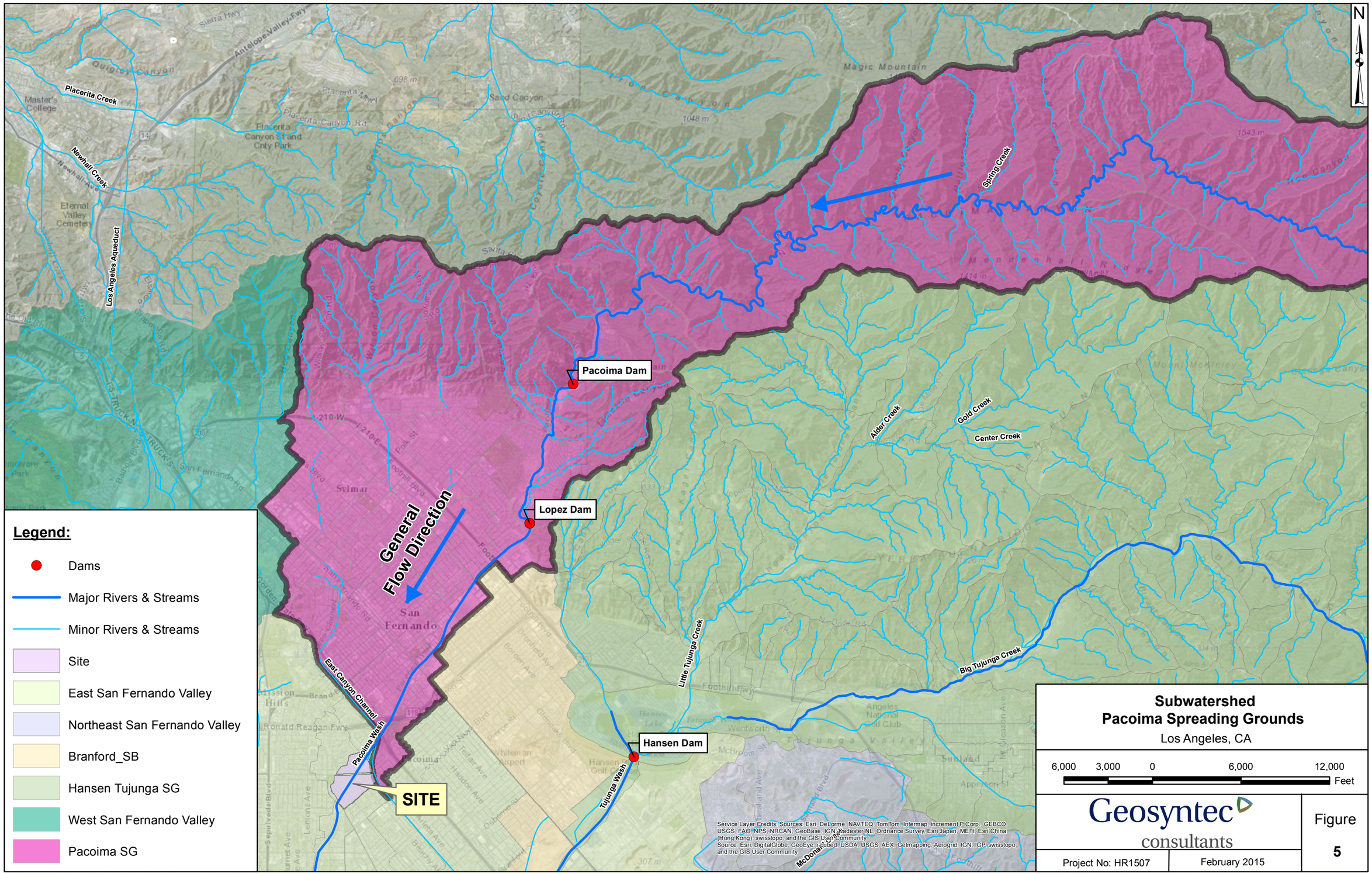

S:\GIS\HR1507\Project\PSG_SubWatershed.mxd cc 2/9/2015

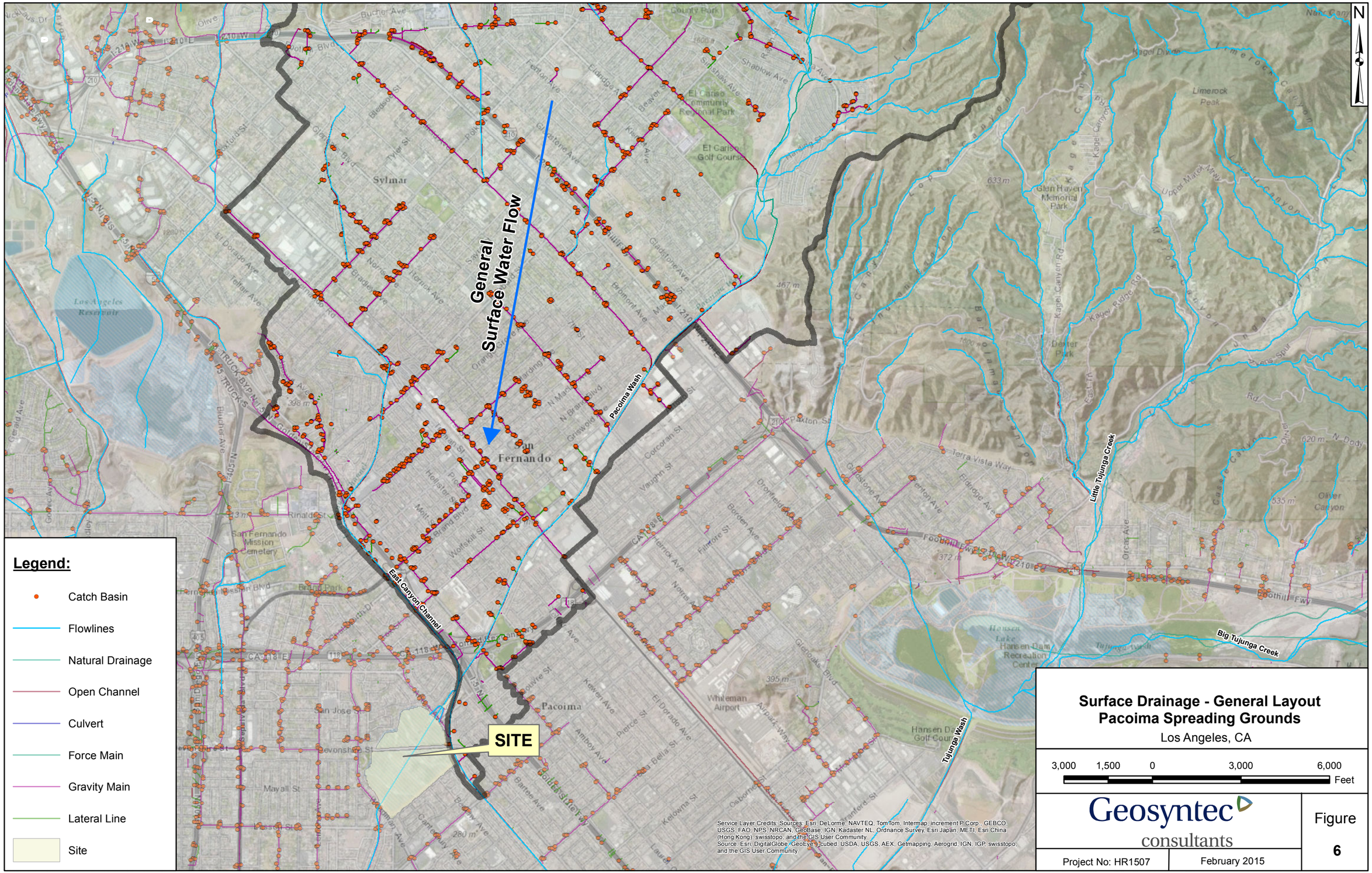

Surface Drainage - General Layout
Pacoima Spreading Grounds
Los Angeles, CA

3,000 1,500 0 3,000 6,000 Feet

Geosyntec consultants

Figure 6

Project No: HR1507 | February 2015

S:\GIS\HR1507\Project\PSG_SurfaceWater.mxd cc 2/9/2015

Site Adjoining Land Use
Pacoima Spreading Grounds
Los Angeles, CA

0 300 1/3 1/2 Miles

Geosyntec consultants

FIGURE
7

Prouject No: HR1507 | February 2015

S:\GIS\HR1507\AI\SiteAdjoiningLandUse_AI.ai

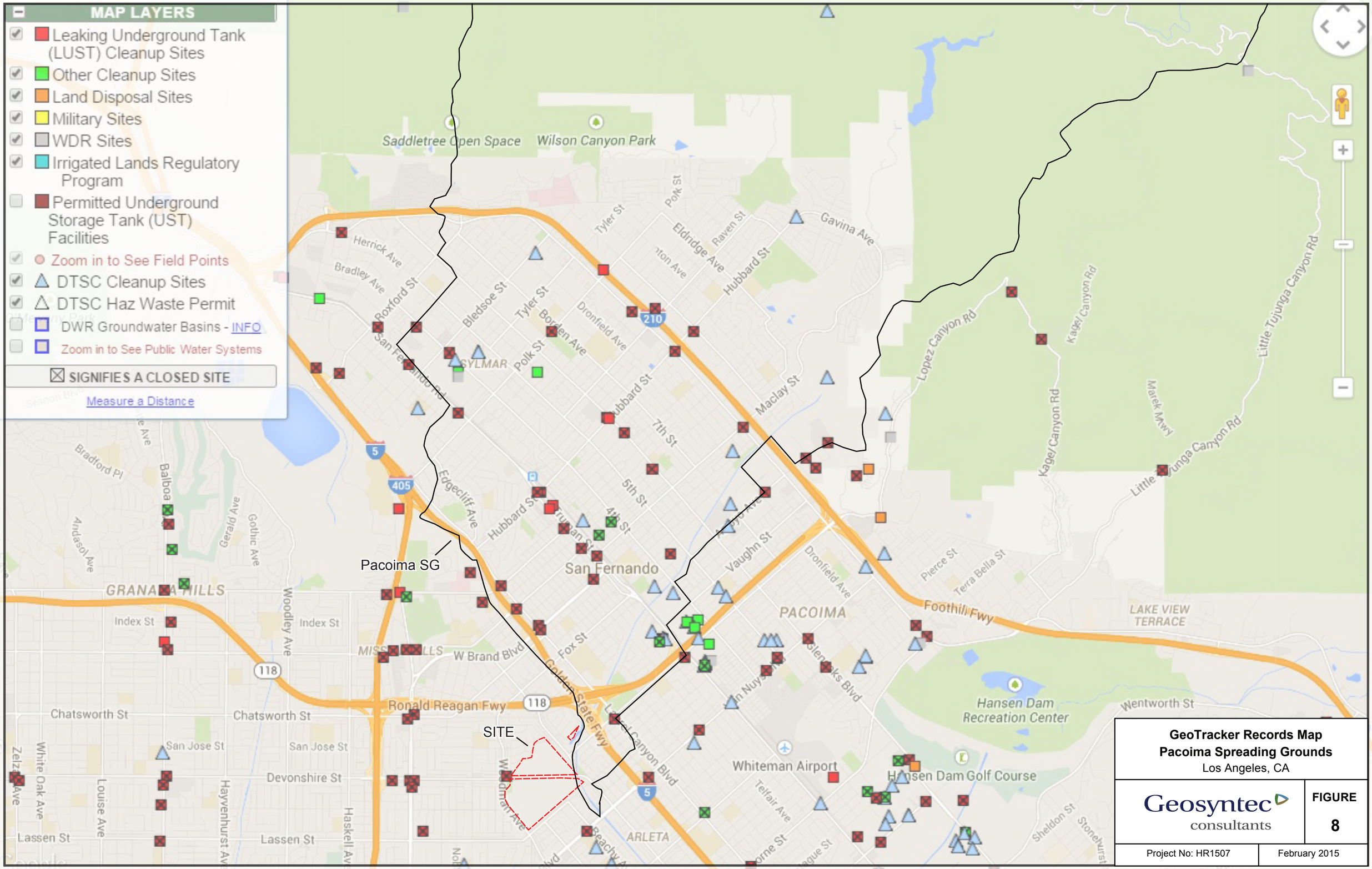

GeoTracker Records Map
Pacoima Spreading Grounds
Los Angeles, CA

Geosyntec consultants

FIGURE 8

Project No: HR1507 | February 2015

S:\GIS\HR1507\All\Geotracker.ai

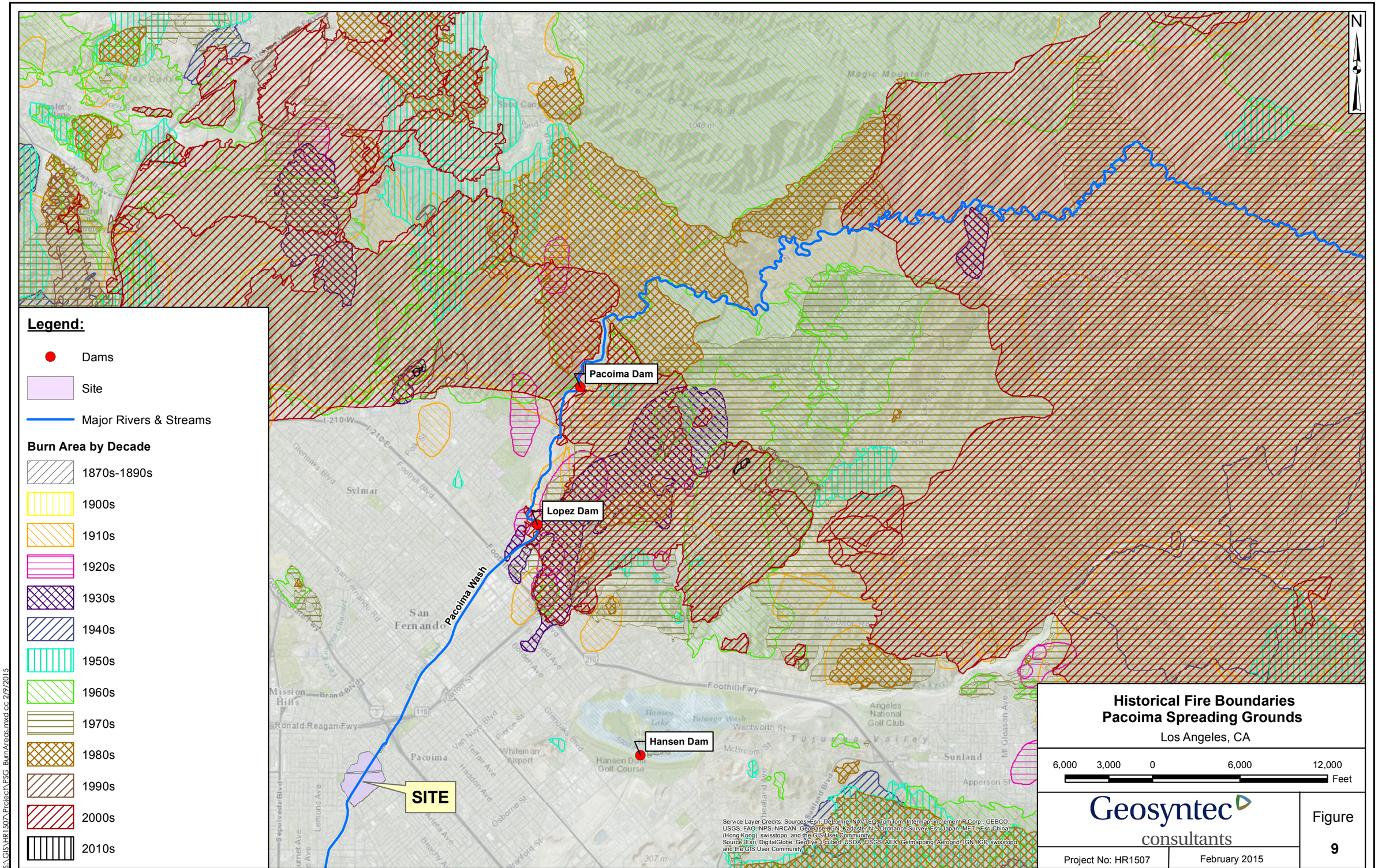

Historical Fire Boundaries
Pacoima Spreading Grounds
Los Angeles, CA

6,000 3,000 0 6,000 12,000 Feet

Geosyntec consultants

Figure 9

Project No: HR1507 | February 2015

S:\GIS\HR1507\Project\PSG_BurnAreas.mxd cc 2/9/2015

APPENDIX A
HISTORICAL TOPOGRAPHIC MAPS

Historical Topographic Map

N	ADJOINING QUAD NAME: SANTA MONICA MAP YEAR: 1896 SERIES: 15 SCALE: 1:62500	SITE NAME: Pacoima Spreading Grounds Lacfcd Site ADDRESS: Intersection of Devonshire Street & Arleta Ave Mission Hills, Los A, CA LAT/LONG: 34.2563 / -118.449	CLIENT: GeoSyntec Consultants CONTACT: Zahra Amini INQUIRY#: 4185299.4 RESEARCH DATE: 01/19/2015

Historical Topographic Map

N	TARGET QUAD NAME: FERNANDO MAP YEAR: 1900 SERIES: 15 SCALE: 1:62500	SITE NAME: Pacoima Spreading Grounds Lacfcd Site ADDRESS: Intersection of Devonshire Street & Arleta Ave Mission Hills, Los A, CA LAT/LONG: 34.2563 / -118.449	CLIENT: GeoSyntec Consultants CONTACT: Zahra Amini INQUIRY#: 4185299.4 RESEARCH DATE: 01/19/2015

Historical Topographic Map

N	TARGET QUAD	SITE NAME:	Pacoima Spreading Grounds Lacfcd Site	CLIENT:	GeoSyntec Consultants
	NAME: SOUTHERN CA SHEET 1	ADDRESS:	Intersection of Devonshire Street & Arleta Ave	CONTACT:	Zahra Amini
	MAP YEAR: 1901		Mission Hills, Los A, CA	INQUIRY#:	4185299.4
	SERIES: 60	LAT/LONG:	34.2563 / -118.449	RESEARCH DATE:	01/19/2015
	SCALE: 1:250000				

Historical Topographic Map

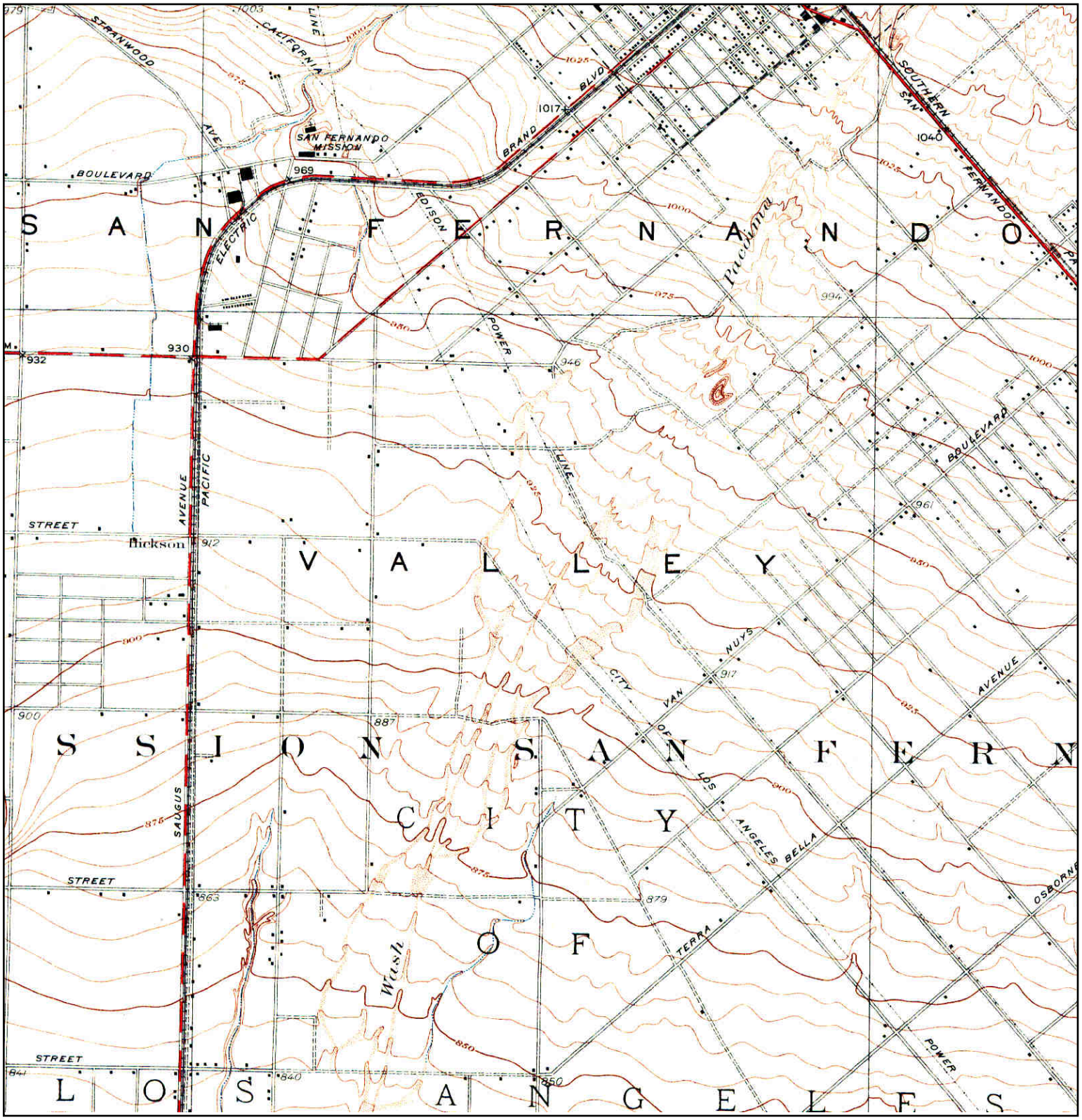

N	TARGET QUAD NAME: PACOIMA MAP YEAR: 1927 SERIES: 6 SCALE: 1:24000	SITE NAME: Pacoima Spreading Grounds Lacfcd Site ADDRESS: Intersection of Devonshire Street & Arleta Ave Mission Hills, Los A, CA LAT/LONG: 34.2563 / -118.449	CLIENT: GeoSyntec Consultants CONTACT: Zahra Amini INQUIRY#: 4185299.4 RESEARCH DATE: 01/19/2015

Historical Topographic Map

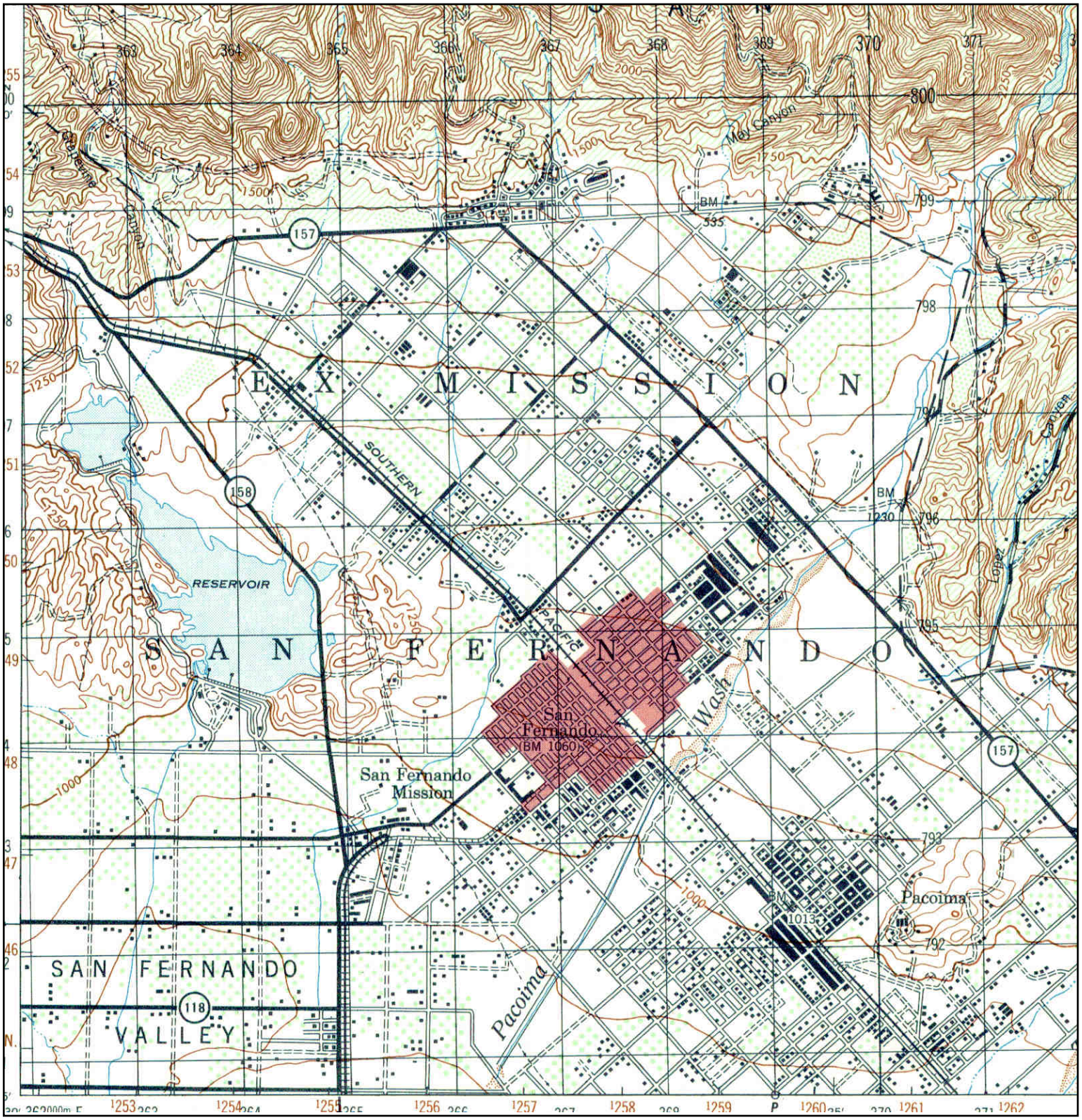

N	TARGET QUAD NAME: SAN FERNANDO MAP YEAR: 1947 SERIES: 15 SCALE: 1:50000	SITE NAME: Pacoima Spreading Grounds Lacfcd Site ADDRESS: Intersection of Devonshire Street & Arleta Ave Mission Hills, Los A, CA LAT/LONG: 34.2563 / -118.449	CLIENT: GeoSyntec Consultants CONTACT: Zahra Amini INQUIRY#: 4185299.4 RESEARCH DATE: 01/19/2015

Historical Topographic Map

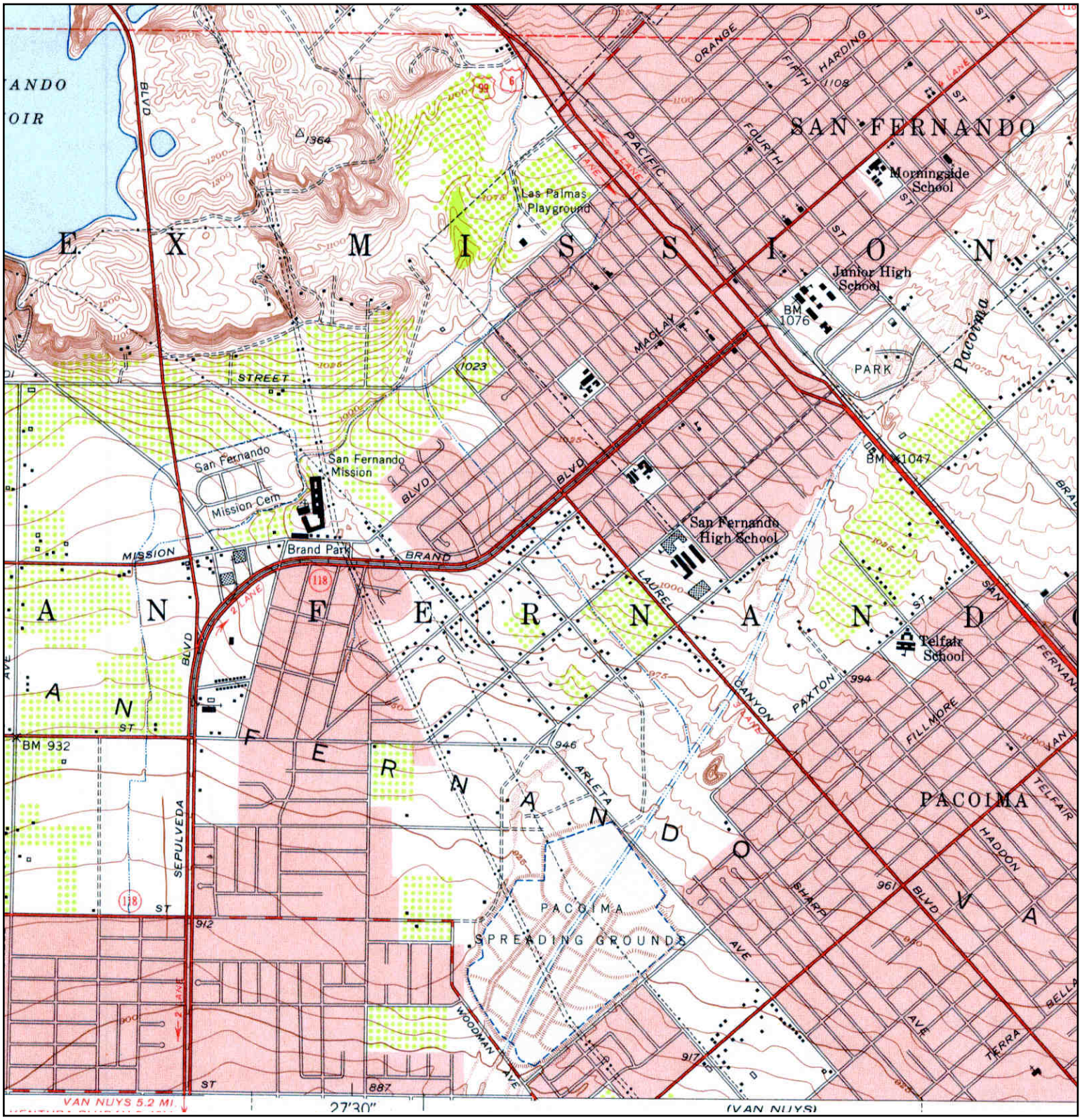

N	**TARGET QUAD** NAME: SAN FERNANDO MAP YEAR: 1953 SERIES: 7.5 SCALE: 1:24000	SITE NAME: Pacoima Spreading Grounds Lacfcd Site ADDRESS: Intersection of Devonshire Street & Arleta Ave Mission Hills, Los A, CA LAT/LONG: 34.2563 / -118.449	CLIENT: GeoSyntec Consultants CONTACT: Zahra Amini INQUIRY#: 4185299.4 RESEARCH DATE: 01/19/2015

Historical Topographic Map

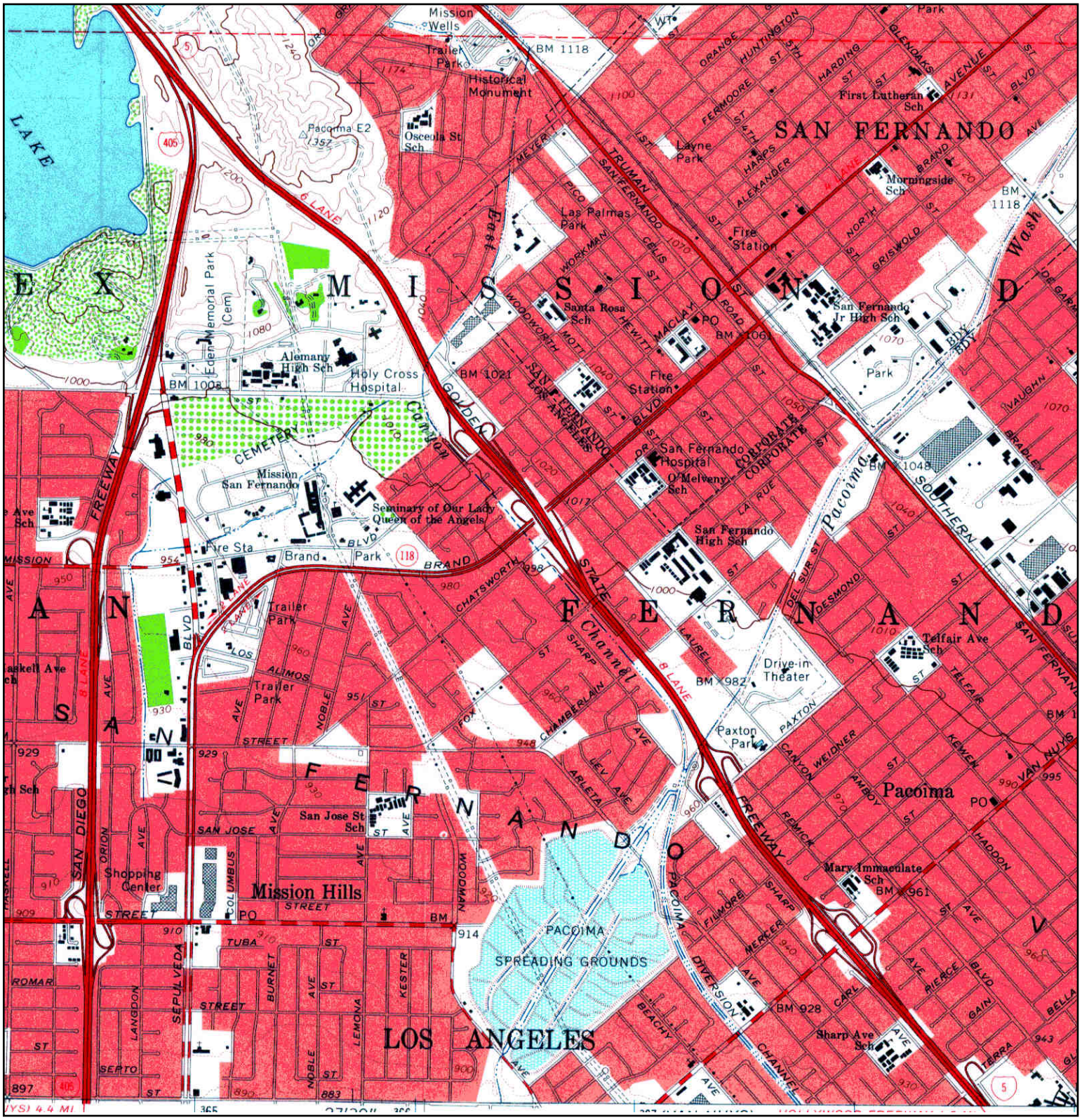

N	**TARGET QUAD** NAME: SAN FERNANDO MAP YEAR: 1966 SERIES: 7.5 SCALE: 1:24000	SITE NAME: Pacoima Spreading Grounds Lacfcd Site ADDRESS: Intersection of Devonshire Street & Arleta Ave Mission Hills, Los A, CA LAT/LONG: 34.2563 / -118.449	CLIENT: GeoSyntec Consultants CONTACT: Zahra Amini INQUIRY#: 4185299.4 RESEARCH DATE: 01/19/2015

Historical Topographic Map

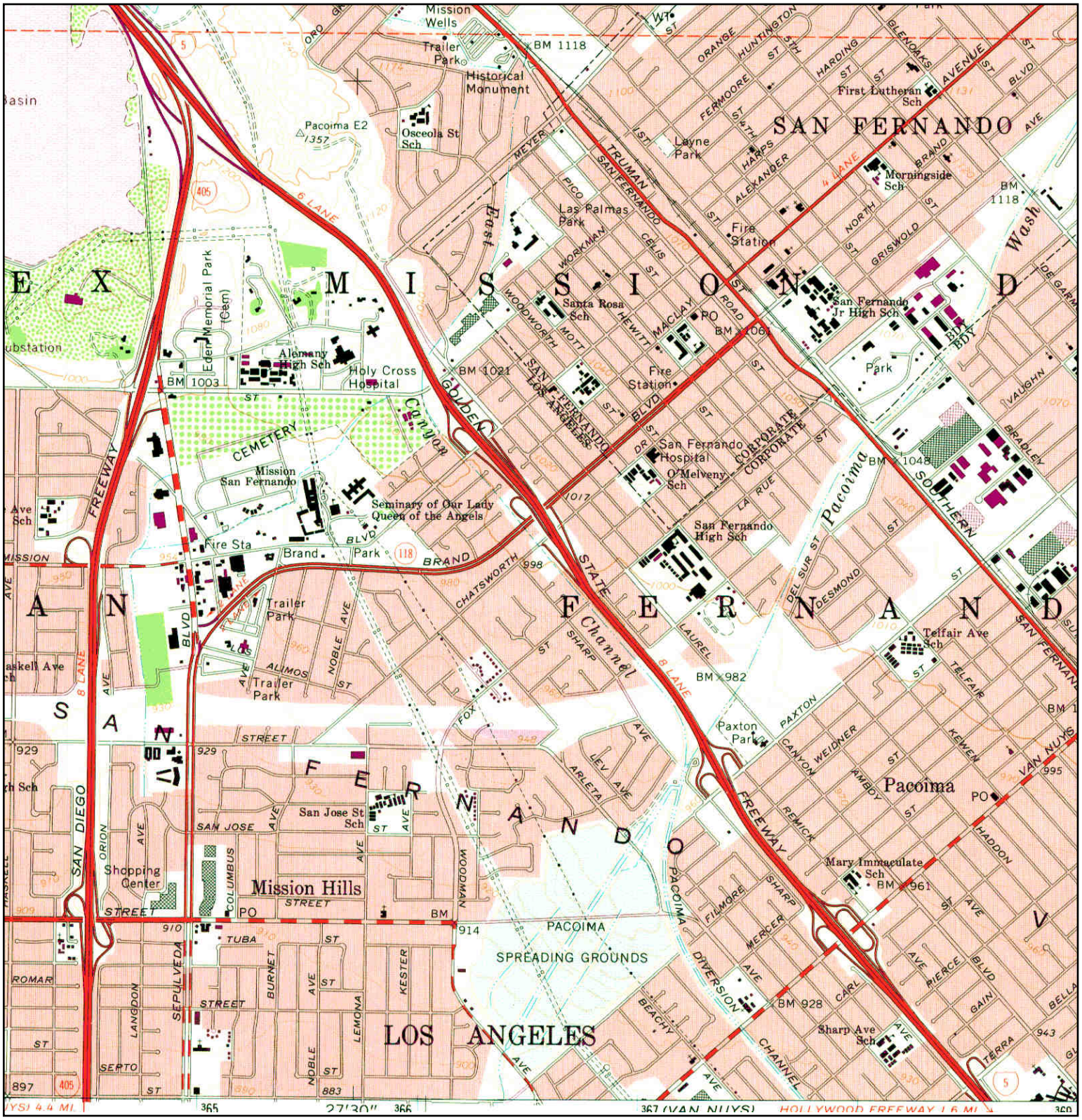

N	**TARGET QUAD** NAME: SAN FERNANDO MAP YEAR: 1972 PHOTOREVISED FROM :1966 SERIES: 7.5 SCALE: 1:24000	SITE NAME: Pacoima Spreading Grounds Lacfcd Site ADDRESS: Intersection of Devonshire Street & Arleta Ave Mission Hills, Los A, CA LAT/LONG: 34.2563 / -118.449	CLIENT: GeoSyntec Consultants CONTACT: Zahra Amini INQUIRY#: 4185299.4 RESEARCH DATE: 01/19/2015

Historical Topographic Map

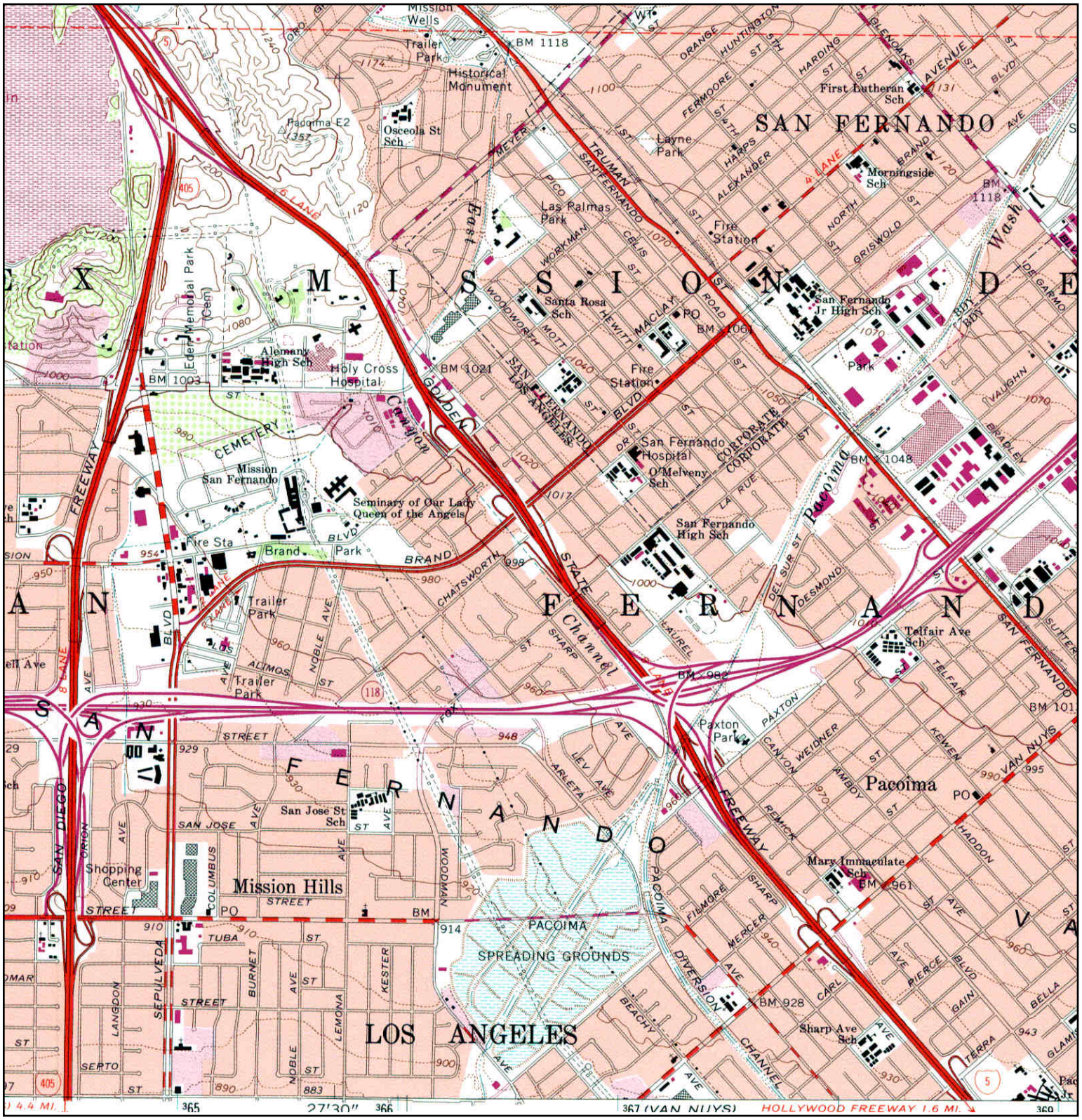

N	**TARGET QUAD** NAME: SAN FERNANDO MAP YEAR: 1988 PHOTOREVISED FROM :1966 SERIES: 7.5 SCALE: 1:24000	SITE NAME: Pacoima Spreading Grounds Lacfcd Site ADDRESS: Intersection of Devonshire Street & Arleta Ave Mission Hills, Los A, CA LAT/LONG: 34.2563 / -118.449	CLIENT: GeoSyntec Consultants CONTACT: Zahra Amini INQUIRY#: 4185299.4 RESEARCH DATE: 01/19/2015

Historical Topographic Map

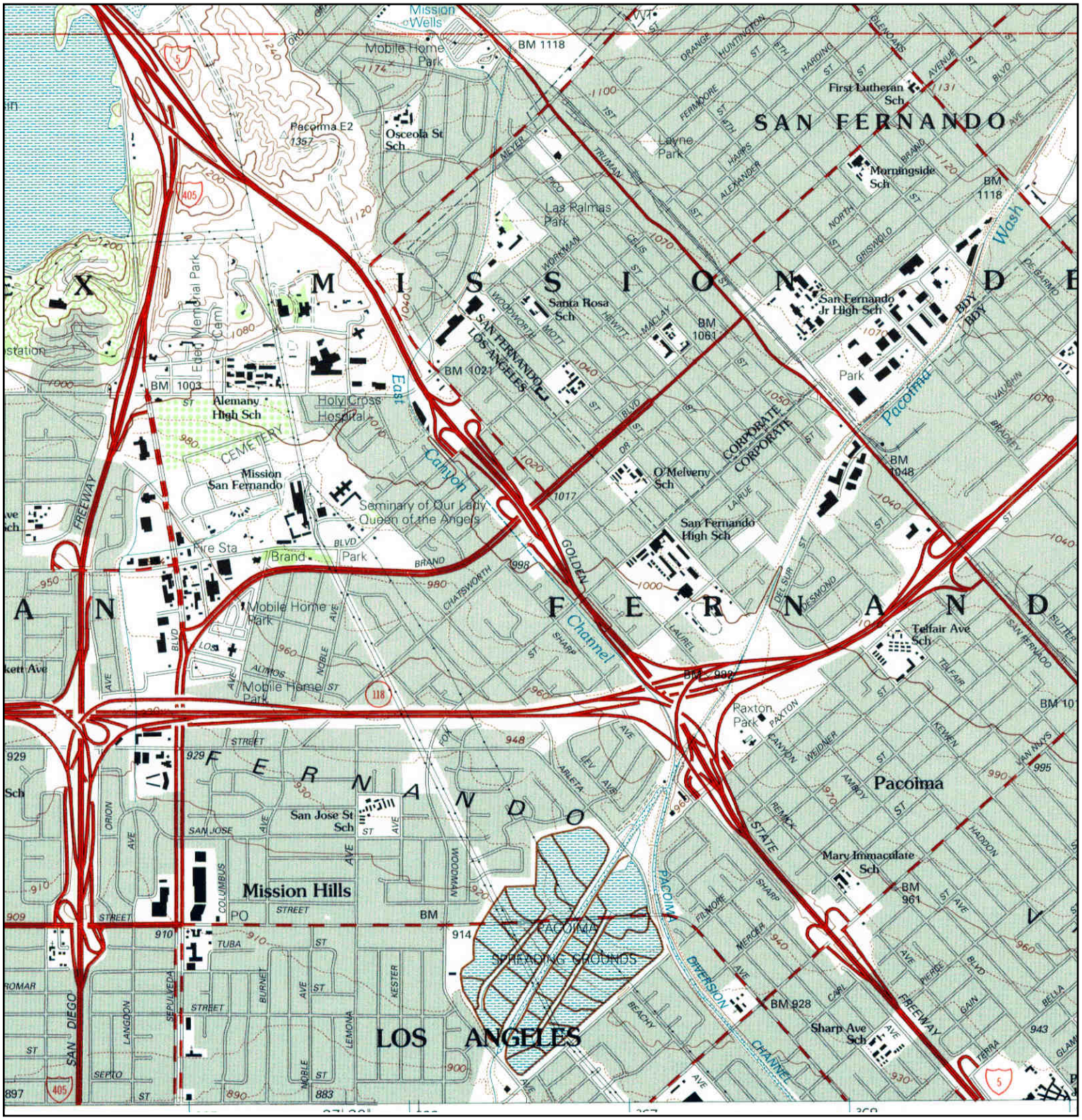

N	TARGET QUAD NAME: SAN FERNANDO MAP YEAR: 1995 SERIES: 7.5 SCALE: 1:24000	SITE NAME: Pacoima Spreading Grounds Lacfcd Site ADDRESS: Intersection of Devonshire Street & Arleta Ave Mission Hills, Los A, CA LAT/LONG: 34.2563 / -118.449	CLIENT: GeoSyntec Consultants CONTACT: Zahra Amini INQUIRY#: 4185299.4 RESEARCH DATE: 01/19/2015

APPENDIX B
EDR DATABASE
RECORDS REVIEW REPORT

Pacoima Spreading Grounds Lacfcd Site
Intersection of Devonshire Street & Arleta Ave
Mission Hills, Los A, CA 91345

Inquiry Number: 4185299.2s
January 19, 2015

The EDR Radius Map™ Report with GeoCheck®

EDR® Environmental Data Resources Inc

6 Armstrong Road, 4th floor
Shelton, CT 06484
Toll Free: 800.352.0050
www.edrnet.com

TABLE OF CONTENTS

SECTION	PAGE
Executive Summary	ES1
Overview Map	2
Detail Map	3
Map Findings Summary	4
Map Findings	8
Orphan Summary	236
Government Records Searched/Data Currency Tracking	GR-1

GEOCHECK ADDENDUM

Physical Setting Source Addendum	A-1
Physical Setting Source Summary	A-2
Physical Setting SSURGO Soil Map	A-5
Physical Setting Source Map	A-8
Physical Setting Source Map Findings	A-10
Physical Setting Source Records Searched	PSGR-1

Thank you for your business.
Please contact EDR at 1-800-352-0050
with any questions or comments.

Disclaimer - Copyright and Trademark Notice

This Report contains certain information obtained from a variety of public and other sources reasonably available to Environmental Data Resources, Inc. It cannot be concluded from this Report that coverage information for the target and surrounding properties does not exist from other sources. **NO WARRANTY EXPRESSED OR IMPLIED, IS MADE WHATSOEVER IN CONNECTION WITH THIS REPORT. ENVIRONMENTAL DATA RESOURCES, INC. SPECIFICALLY DISCLAIMS THE MAKING OF ANY SUCH WARRANTIES, INCLUDING WITHOUT LIMITATION, MERCHANTABILITY OR FITNESS FOR A PARTICULAR USE OR PURPOSE. ALL RISK IS ASSUMED BY THE USER. IN NO EVENT SHALL ENVIRONMENTAL DATA RESOURCES, INC. BE LIABLE TO ANYONE, WHETHER ARISING OUT OF ERRORS OR OMISSIONS, NEGLIGENCE, ACCIDENT OR ANY OTHER CAUSE, FOR ANY LOSS OF DAMAGE, INCLUDING, WITHOUT LIMITATION, SPECIAL, INCIDENTAL, CONSEQUENTIAL, OR EXEMPLARY DAMAGES. ANY LIABILITY ON THE PART OF ENVIRONMENTAL DATA RESOURCES, INC. IS STRICTLY LIMITED TO A REFUND OF THE AMOUNT PAID FOR THIS REPORT.** Purchaser accepts this Report "AS IS". Any analyses, estimates, ratings, environmental risk levels or risk codes provided in this Report are provided for illustrative purposes only, and are not intended to provide, nor should they be interpreted as providing any facts regarding, or prediction or forecast of, any environmental risk for any property. Only a Phase I Environmental Site Assessment performed by an environmental professional can provide information regarding the environmental risk for any property. Additionally, the information provided in this Report is not to be construed as legal advice.

Copyright 2015 by Environmental Data Resources, Inc. All rights reserved. Reproduction in any media or format, in whole or in part, of any report or map of Environmental Data Resources, Inc., or its affiliates, is prohibited without prior written permission.

EDR and its logos (including Sanborn and Sanborn Map) are trademarks of Environmental Data Resources, Inc. or its affiliates. All other trademarks used herein are the property of their respective owners.

EXECUTIVE SUMMARY

A search of available environmental records was conducted by Environmental Data Resources, Inc (EDR). The report was designed to assist parties seeking to meet the search requirements of EPA's Standards and Practices for All Appropriate Inquiries (40 CFR Part 312), the ASTM Standard Practice for Environmental Site Assessments (E 1527-13) or custom requirements developed for the evaluation of environmental risk associated with a parcel of real estate.

TARGET PROPERTY INFORMATION

ADDRESS

INTERSECTION OF DEVONSHIRE STREET & ARLETA AVE
LOS ANGELES County, CA 91345

COORDINATES

Latitude (North):	34.2563000 - 34˚ 15' 22.68''
Longitude (West):	118.4490000 - 118˚ 26' 56.40''
Universal Tranverse Mercator:	Zone 11
UTM X (Meters):	366582.9
UTM Y (Meters):	3791329.0
Elevation:	923 ft. above sea level

USGS TOPOGRAPHIC MAP ASSOCIATED WITH TARGET PROPERTY

Target Property Map:	34118-C4 SAN FERNANDO, CA
Most Recent Revision:	1988
South Map:	34118-B4 VAN NUYS, CA
Most Recent Revision:	1991

AERIAL PHOTOGRAPHY IN THIS REPORT

Portions of Photo from:	20120428
Source:	USDA

TARGET PROPERTY SEARCH RESULTS

The target property was not listed in any of the databases searched by EDR.

DATABASES WITH NO MAPPED SITES

No mapped sites were found in EDR's search of available ("reasonably ascertainable ") government records either on the target property or within the search radius around the target property for the following databases:

STANDARD ENVIRONMENTAL RECORDS

Federal NPL site list

Proposed NPL---------- Proposed National Priority List Sites

EXECUTIVE SUMMARY

NPL LIENS ..... Federal Superfund Liens

Federal Delisted NPL site list

Delisted NPL ..... National Priority List Deletions

Federal CERCLIS list

CERCLIS ..... Comprehensive Environmental Response, Compensation, and Liability Information System
FEDERAL FACILITY ..... Federal Facility Site Information listing

Federal CERCLIS NFRAP site List

CERC-NFRAP ..... CERCLIS No Further Remedial Action Planned

Federal RCRA non-CORRACTS TSD facilities list

RCRA-TSDF ..... RCRA - Treatment, Storage and Disposal

Federal RCRA generators list

RCRA-CESQG ..... RCRA - Conditionally Exempt Small Quantity Generator

Federal institutional controls / engineering controls registries

US ENG CONTROLS ..... Engineering Controls Sites List
US INST CONTROL ..... Sites with Institutional Controls
LUCIS ..... Land Use Control Information System

State and tribal landfill and/or solid waste disposal site lists

SWF/LF ..... Solid Waste Information System

State and tribal leaking storage tank lists

SLIC ..... Statewide SLIC Cases
INDIAN LUST ..... Leaking Underground Storage Tanks on Indian Land

State and tribal registered storage tank lists

AST ..... Aboveground Petroleum Storage Tank Facilities
INDIAN UST ..... Underground Storage Tanks on Indian Land
FEMA UST ..... Underground Storage Tank Listing

State and tribal voluntary cleanup sites

INDIAN VCP ..... Voluntary Cleanup Priority Listing
VCP ..... Voluntary Cleanup Program Properties

ADDITIONAL ENVIRONMENTAL RECORDS

Local Lists of Landfill / Solid Waste Disposal Sites

ODI ..... Open Dump Inventory

EXECUTIVE SUMMARY

DEBRIS REGION 9	Torres Martinez Reservation Illegal Dump Site Locations
HAULERS	Registered Waste Tire Haulers Listing
INDIAN ODI	Report on the Status of Open Dumps on Indian Lands

Local Lists of Hazardous waste / Contaminated Sites

US CDL	Clandestine Drug Labs
SCH	School Property Evaluation Program
Toxic Pits	Toxic Pits Cleanup Act Sites
AOCONCERN	San Gabriel Valley Areas of Concern
CDL	Clandestine Drug Labs
US HIST CDL	National Clandestine Laboratory Register

Local Land Records

LIENS 2	CERCLA Lien Information
LIENS	Environmental Liens Listing
DEED	Deed Restriction Listing

Records of Emergency Release Reports

HMIRS	Hazardous Materials Information Reporting System
CHMIRS	California Hazardous Material Incident Report System
LDS	Land Disposal Sites Listing
MCS	Military Cleanup Sites Listing
SPILLS 90	SPILLS 90 data from FirstSearch

Other Ascertainable Records

DOT OPS	Incident and Accident Data
DOD	Department of Defense Sites
FUDS	Formerly Used Defense Sites
UMTRA	Uranium Mill Tailings Sites
US MINES	Mines Master Index File
TRIS	Toxic Chemical Release Inventory System
TSCA	Toxic Substances Control Act
FTTS	FIFRA/ TSCA Tracking System - FIFRA (Federal Insecticide, Fungicide, & Rodenticide Act)/TSCA (Toxic Substances Control Act)
HIST FTTS	FIFRA/TSCA Tracking System Administrative Case Listing
SSTS	Section 7 Tracking Systems
ICIS	Integrated Compliance Information System
PADS	PCB Activity Database System
MLTS	Material Licensing Tracking System
RADINFO	Radiation Information Database
FINDS	Facility Index System/Facility Registry System
RAATS	RCRA Administrative Action Tracking System
RMP	Risk Management Plans
CA BOND EXP. PLAN	Bond Expenditure Plan
NPDES	NPDES Permits Listing
Cortese	"Cortese" Hazardous Waste & Substances Sites List
CUPA Listings	CUPA Resources List
LA Co. Site Mitigation	Site Mitigation List
DRYCLEANERS	Cleaner Facilities
WIP	Well Investigation Program Case List
ENF	Enforcement Action Listing

EXECUTIVE SUMMARY

EMI	Emissions Inventory Data
INDIAN RESERV	Indian Reservations
SCRD DRYCLEANERS	State Coalition for Remediation of Drycleaners Listing
US FIN ASSUR	Financial Assurance Information
EPA WATCH LIST	EPA WATCH LIST
LEAD SMELTERS	Lead Smelter Sites
PRP	Potentially Responsible Parties
2020 COR ACTION	2020 Corrective Action Program List
COAL ASH DOE	Steam-Electric Plant Operation Data
US AIRS	Aerometric Information Retrieval System Facility Subsystem
WDS	Waste Discharge System
HWT	Registered Hazardous Waste Transporter Database
PROC	Certified Processors Database
Financial Assurance	Financial Assurance Information Listing
MWMP	Medical Waste Management Program Listing
PCB TRANSFORMER	PCB Transformer Registration Database
COAL ASH EPA	Coal Combustion Residues Surface Impoundments List

EDR HIGH RISK HISTORICAL RECORDS

EDR Exclusive Records

EDR MGP	EDR Proprietary Manufactured Gas Plants

EDR RECOVERED GOVERNMENT ARCHIVES

Exclusive Recovered Govt. Archives

RGA LF	Recovered Government Archive Solid Waste Facilities List

SURROUNDING SITES: SEARCH RESULTS

Surrounding sites were identified in the following databases.

Elevations have been determined from the USGS Digital Elevation Model and should be evaluated on a relative (not an absolute) basis. Relative elevation information between sites of close proximity should be field verified. Sites with an elevation equal to or higher than the target property have been differentiated below from sites with an elevation lower than the target property.
Page numbers and map identification numbers refer to the EDR Radius Map report where detailed data on individual sites can be reviewed.

Sites listed in ***bold italics*** are in multiple databases.

Unmappable (orphan) sites are not considered in the foregoing analysis.

STANDARD ENVIRONMENTAL RECORDS

Federal NPL site list

NPL: Also known as Superfund, the National Priority List database is a subset of CERCLIS and identifies over 1,200 sites for priority cleanup under the Superfund program. The source of this database is the U.S. EPA.

A review of the NPL list, as provided by EDR, and dated 09/29/2014 has revealed that there is 1 NPL

site within approximately 1 mile of the target property.

Equal/Higher Elevation	Address	Direction / Distance	Map ID	Page
SAN FERNANDO VALLEY (AREA 1)	***NORTH HOLLYWOOD WELLFIE***	***NE 1/2 - 1 (0.770 mi.)***	***0***	***8***

Federal RCRA CORRACTS facilities list

CORRACTS: CORRACTS is a list of handlers with RCRA Corrective Action Activity. This report shows which nationally-defined corrective action core events have occurred for every handler that has had corrective action activity.

A review of the CORRACTS list, as provided by EDR, and dated 06/10/2014 has revealed that there is 1 CORRACTS site within approximately 1 mile of the target property.

Equal/Higher Elevation	Address	Direction / Distance	Map ID	Page
AMERICAN ETCHING AND MFG.	***13730 DESMOND ST***	***NE 1/2 - 1 (0.733 mi.)***	***H62***	***142***

Federal RCRA generators list

RCRA-LQG: RCRAInfo is EPA's comprehensive information system, providing access to data supporting the Resource Conservation and Recovery Act (RCRA) of 1976 and the Hazardous and Solid Waste Amendments (HSWA) of 1984. The database includes selective information on sites which generate, transport, store, treat and/or dispose of hazardous waste as defined by the Resource Conservation and Recovery Act (RCRA). Large quantity generators (LQGs) generate over 1,000 kilograms (kg) of hazardous waste, or over 1 kg of acutely hazardous waste per month.

A review of the RCRA-LQG list, as provided by EDR, and dated 06/10/2014 has revealed that there is 1 RCRA-LQG site within approximately 0.25 miles of the target property.

Equal/Higher Elevation	Address	Direction / Distance	Map ID	Page
SAN JOSE STREET ELEMENTARY SCH	14928 CLYMER ST	NW 1/8 - 1/4 (0.198 mi.)	45	113

RCRA-SQG: RCRAInfo is EPA's comprehensive information system, providing access to data supporting the Resource Conservation and Recovery Act (RCRA) of 1976 and the Hazardous and Solid Waste Amendments (HSWA) of 1984. The database includes selective information on sites which generate, transport, store, treat and/or dispose of hazardous waste as defined by the Resource Conservation and Recovery Act (RCRA). Small quantity generators (SQGs) generate between 100 kg and 1,000 kg of hazardous waste per month.

A review of the RCRA-SQG list, as provided by EDR, and dated 06/10/2014 has revealed that there are 2 RCRA-SQG sites within approximately 0.25 miles of the target property.

Equal/Higher Elevation	Address	Direction / Distance	Map ID	Page
SOUTHERN CALIFORNIA GAS CO	14201 PAXTON ST	NE 0 - 1/8 (0.021 mi.)	31	101
SHELL SERVICE STATION	***10685 LAUREL CANYON BLV***	***NE 1/8 - 1/4 (0.166 mi.)***	***E43***	***108***

EXECUTIVE SUMMARY

Federal ERNS list

ERNS: The Emergency Response Notification System records and stores information on reported releases of oil and hazardous substances. The source of this database is the U.S. EPA.

A review of the ERNS list, as provided by EDR, and dated 09/29/2014 has revealed that there are 3 ERNS sites within approximately 0.001 miles of the target property.

Equal/Higher Elevation	Address	Direction / Distance	Map ID	Page
Not reported	14661 SAN JOSE	0 - 1/8 (0.000 mi.)	B5	80

Lower Elevation	Address	Direction / Distance	Map ID	Page
Not reported	ARCO #1575 14761 DEVONS	0 - 1/8 (0.000 mi.)	A2	79
Not reported	14761 DEVONSHIRE	0 - 1/8 (0.000 mi.)	A9	87

State- and tribal - equivalent NPL

RESPONSE: Identifies confirmed release sites where DTSC is involved in remediation, either in a lead or oversight capacity. These confirmed release sites are generally high-priority and high potential risk.

A review of the RESPONSE list, as provided by EDR, and dated 11/03/2014 has revealed that there are 2 RESPONSE sites within approximately 1 mile of the target property.

Equal/Higher Elevation	Address	Direction / Distance	Map ID	Page
PARAGON / KLEINERT/ D&M	***11035 SUTTER AVE***	***NE 1/2 - 1 (0.926 mi.)***	***I68***	***181***
HOLCHEM INCORPORATED	***13546 DESMOND ST***	***NE 1/2 - 1 (0.996 mi.)***	***J70***	***201***

State- and tribal - equivalent CERCLIS

ENVIROSTOR: The Department of Toxic Substances Control's (DTSC's) Site Mitigation and Brownfields Reuse Program's (SMBRP's) EnviroStor database identifes sites that have known contamination or sites for which there may be reasons to investigate further. The database includes the following site types: Federal Superfund sites (National Priorities List (NPL)); State Response, including Military Facilities and State Superfund; Voluntary Cleanup; and School sites. EnviroStor provides similar information to the information that was available in CalSites, and provides additional site information, including, but not limited to, identification of formerly-contaminated properties that have been released for reuse, properties where environmental deed restrictions have been recorded to prevent inappropriate land uses, and risk characterization information that is used to assess potential impacts to public health and the environment at contaminated sites.

A review of the ENVIROSTOR list, as provided by EDR, and dated 11/03/2014 has revealed that there are 13 ENVIROSTOR sites within approximately 1 mile of the target property.

Equal/Higher Elevation	Address	Direction / Distance	Map ID	Page
SAN FERNANDO VALLEY (AREA 1) Status: Active	***NORTH HOLLYWOOD WELLFIE***	***NE 1/2 - 1 (0.770 mi.)***	***0***	***8***
LOUIES CLEANERS Status: Refer: Local Agency	***10427 LAUREL CANYON***	***ENE 1/2 - 1 (0.514 mi.)***	***59***	***131***
VANCRAFT INC Status: Inactive - Action Required Status: Refer: Other Agency	***11263 ILEX AV***	***NE 1/2 - 1 (0.714 mi.)***	***60***	***134***

EXECUTIVE SUMMARY

Equal/Higher Elevation	Address	Direction / Distance	Map ID	Page
AMERICAN ETCHING AND MFG. Status: Refer: Other Agency Status: Inactive - Action Required Status: * Inactive	***13730 DESMOND ST***	***NE 1/2 - 1 (0.733 mi.)***	***H62***	***142***
CP PLATING Status: Inactive - Needs Evaluation	13717 DESMOND STREET	NE 1/2 - 1 (0.762 mi.)	H63	165
FRED E MARSHALL CONSTRUCTION Status: No Further Action	***11071 SUTTER AVE***	***NE 1/2 - 1 (0.911 mi.)***	***I65***	***166***
PRICE PFISTER INC Status: Refer: Other Agency Status: Refer: RWQCB	***13500 PAXTON ST***	***NE 1/2 - 1 (0.917 mi.)***	***66***	***168***
SUTTER AVENUE PROPERTIES Status: No Further Action	***11101; 11151; AND 11074***	***NE 1/2 - 1 (0.920 mi.)***	***I67***	***179***
PARAGON / KLEINERT/ D&M Status: No Further Action	***11035 SUTTER AVE***	***NE 1/2 - 1 (0.926 mi.)***	***I68***	***181***
BURBANK PLATING SERVICES CORPO Status: Inactive - Action Required Status: Refer: Other Agency	***13561 DESMOND ST.***	***NE 1/2 - 1 (0.970 mi.)***	***J69***	***187***
HOLCHEM INCORPORATED Status: Refer: Other Agency Status: Active	***13546 DESMOND ST***	***NE 1/2 - 1 (0.996 mi.)***	***J70***	***201***

Lower Elevation	Address	Direction / Distance	Map ID	Page
EAST VALLEY HIGH SCHOOL NO. 2 Status: No Further Action	***14184-14210 VAN NUYS BL***	***SE 1/4 - 1/2 (0.264 mi.)***	***G53***	***120***
VALUE CLEANERS Status: Refer: 1248 Local Agency	***10345 SEPULVEDA***	***W 1/2 - 1 (0.724 mi.)***	***61***	***138***

State and tribal leaking storage tank lists

LUST: The Leaking Underground Storage Tank Incident Reports contain an inventory of reported leaking underground storage tank incidents. The data come from the State Water Resources Control Board Leaking Underground Storage Tank Information System.

A review of the LUST list, as provided by EDR, and dated 12/12/2014 has revealed that there are 5 LUST sites within approximately 0.5 miles of the target property.

Equal/Higher Elevation	Address	Direction / Distance	Map ID	Page
SHELL OIL PRODUCTS CO Status: Completed - Case Closed	10685 LAUREL CANYON	NE 1/8 - 1/4 (0.166 mi.)	E44	111
UNOCAL #5704 Status: Completed - Case Closed	***13812 VAN NUYS BLVD***	***E 1/4 - 1/2 (0.428 mi.)***	***57***	***127***

Lower Elevation	Address	Direction / Distance	Map ID	Page
ARCO FACILITY NO. 1575 Status: Completed - Case Closed	***14761 DEVONSHIRE***	***0 - 1/8 (0.000 mi.)***	***A6***	***80***

Lower Elevation	Address	Direction / Distance	Map ID	Page
ARCO FACILITY #1575	***14761 DEVONSHIRE ST***	***0 - 1/8 (0.000 mi.)***	***A8***	***84***
UNOCAL #6987	***14200 VAN NUYS BLVD N***	***SE 1/4 - 1/2 (0.264 mi.)***	***G54***	***123***
Status: Completed - Case Closed				

State and tribal registered storage tank lists

UST: The Underground Storage Tank database contains registered USTs. USTs are regulated under Subtitle I of the Resource Conservation and Recovery Act (RCRA). The data come from the State Water Resources Control Board's Hazardous Substance Storage Container Database.

A review of the UST list, as provided by EDR, and dated 09/17/2014 has revealed that there are 2 UST sites within approximately 0.25 miles of the target property.

Equal/Higher Elevation	Address	Direction / Distance	Map ID	Page
PACOIMA SHELL	10685 LAUREL CANYON BLV	NE 1/8 - 1/4 (0.166 mi.)	E41	108

Lower Elevation	Address	Direction / Distance	Map ID	Page
ARCO SERVICE STATION 1575	14761 DEVONSHIRE ST	0 - 1/8 (0.000 mi.)	A7	83

ADDITIONAL ENVIRONMENTAL RECORDS

Local Brownfield lists

US BROWNFIELDS: The EPA's listing of Brownfields properties from the Cleanups in My Community program, which provides information on Brownfields properties for which information is reported back to EPA, as well as areas served by Brownfields grant programs.

A review of the US BROWNFIELDS list, as provided by EDR, and dated 09/22/2014 has revealed that there is 1 US BROWNFIELDS site within approximately 0.5 miles of the target property.

Lower Elevation	Address	Direction / Distance	Map ID	Page
VAN NUYS	14094 VAN NUYS BLVD	ESE 1/4 - 1/2 (0.262 mi.)	52	118

Local Lists of Landfill / Solid Waste Disposal Sites

SWRCY: A listing of recycling facilities in California.

A review of the SWRCY list, as provided by EDR, and dated 09/16/2014 has revealed that there are 4 SWRCY sites within approximately 0.5 miles of the target property.

Equal/Higher Elevation	Address	Direction / Distance	Map ID	Page
RAMIREZ RECYCLING CENTER	14035 1/2 VAN NUYS BLVD	ESE 1/4 - 1/2 (0.260 mi.)	F51	117
SAN FERNANDO RECYCLING	13950 W VAN NUYS BLVD	E 1/4 - 1/2 (0.284 mi.)	55	126
L A RECYCLING	10455 LAUREL CANYON BLV	ENE 1/4 - 1/2 (0.493 mi.)	58	130

Lower Elevation	Address	Direction / Distance	Map ID	Page
NEXCYCLE	***9710 WOODMAN AVE***	***S 1/4 - 1/2 (0.331 mi.)***	***56***	***126***

EXECUTIVE SUMMARY

WMUDS/SWAT: The Waste Management Unit Database System is used for program tracking and inventory of waste management units. The source is the State Water Resources Control Board.

A review of the WMUDS/SWAT list, as provided by EDR, and dated 04/01/2000 has revealed that there is 1 WMUDS/SWAT site within approximately 0.5 miles of the target property.

Equal/Higher Elevation	Address	Direction / Distance	Map ID	Page
SAN FERNANDO CITY LANDFILL	SHARP AVE & PAXTON	NE 0 - 1/8 (0.053 mi.)	34	104

Local Lists of Hazardous waste / Contaminated Sites

HIST Cal-Sites: Formerly known as ASPIS, this database contains both known and potential hazardous substance sites. The source is the California Department of Toxic Substance Control. No longer updated by the state agency. It has been replaced by ENVIROSTOR.

A review of the HIST Cal-Sites list, as provided by EDR, and dated 08/08/2005 has revealed that there are 2 HIST Cal-Sites sites within approximately 1 mile of the target property.

Equal/Higher Elevation	Address	Direction / Distance	Map ID	Page
SAN FERNANDO VALLEY (AREA 1)	***NORTH HOLLYWOOD WELLFIE***	***NE 1/2 - 1 (0.770 mi.)***	***0***	***8***
HOLCHEM INCORPORATED	***13546 DESMOND ST***	***NE 1/2 - 1 (0.996 mi.)***	***J70***	***201***

Local Lists of Registered Storage Tanks

CA FID UST: The Facility Inventory Database contains active and inactive underground storage tank locations. The source is the State Water Resource Control Board.

A review of the CA FID UST list, as provided by EDR, and dated 10/31/1994 has revealed that there are 4 CA FID UST sites within approximately 0.25 miles of the target property.

Equal/Higher Elevation	Address	Direction / Distance	Map ID	Page
PACOIMA WASH - PACOIMA SPREADI	***10450 ARLETA AVE***	***0 - 1/8 (0.000 mi.)***	***C18***	***90***
ALONA ENTERPRISERS	***14615 CHATSWORTH ST***	***N 1/8 - 1/4 (0.163 mi.)***	***38***	***106***
PYUNG SHELL SERVICE STATION	***10685 LAUREL CANYON BLV***	***NE 1/8 - 1/4 (0.166 mi.)***	***E39***	***107***

Lower Elevation	Address	Direction / Distance	Map ID	Page
FAZELRAHMAN TAJAR/ATA. U RAHMA	14761 DEVONSHIRE ST	0 - 1/8 (0.000 mi.)	A3	79

HIST UST: Historical UST Registered Database.

A review of the HIST UST list, as provided by EDR, and dated 10/15/1990 has revealed that there are 2 HIST UST sites within approximately 0.25 miles of the target property.

Equal/Higher Elevation	Address	Direction / Distance	Map ID	Page
PACOIMA WASH - PACOIMA SPREADI	10450 ARLETA	0 - 1/8 (0.000 mi.)	C11	88

Lower Elevation	Address	Direction / Distance	Map ID	Page
H HAGHIGHI/M JAHANGIR	14761 DEVONSHIRE ST	0 - 1/8 (0.000 mi.)	A1	78

SWEEPS UST: Statewide Environmental Evaluation and Planning System. This underground storage tank listing was updated and maintained by a company contacted by the SWRCB in the early 1990's. The listing is no longer updated or maintained. The local agency is the contact for more information on a site on the SWEEPS list.

A review of the SWEEPS UST list, as provided by EDR, and dated 06/01/1994 has revealed that there are 4 SWEEPS UST sites within approximately 0.25 miles of the target property.

Equal/Higher Elevation	Address	Direction / Distance	Map ID	Page
PACOIMA WASH - PACOIMA SPREADI	*10450 ARLETA AVE*	*0 - 1/8 (0.000 mi.)*	*C18*	*90*
ALONA ENTERPRISERS	*14615 CHATSWORTH ST*	*N 1/8 - 1/4 (0.163 mi.)*	*38*	*106*
PYUNG SHELL SERVICE STATION	*10685 LAUREL CANYON BLV*	*NE 1/8 - 1/4 (0.166 mi.)*	*E39*	*107*

Lower Elevation	Address	Direction / Distance	Map ID	Page
ARCO FACILITY #1575	*14761 DEVONSHIRE ST*	*0 - 1/8 (0.000 mi.)*	*A8*	*84*

Other Ascertainable Records

RCRA NonGen / NLR: RCRAInfo is EPA's comprehensive information system, providing access to data supporting the Resource Conservation and Recovery Act (RCRA) of 1976 and the Hazardous and Solid Waste Amendments (HSWA) of 1984. The database includes selective information on sites which generate, transport, store, treat and/or dispose of hazardous waste as defined by the Resource Conservation and Recovery Act (RCRA). Non-Generators do not presently generate hazardous waste.

A review of the RCRA NonGen / NLR list, as provided by EDR, and dated 06/10/2014 has revealed that there are 2 RCRA NonGen / NLR sites within approximately 0.25 miles of the target property.

Equal/Higher Elevation	Address	Direction / Distance	Map ID	Page
BROKER HAZMAT DISPOSAL INC	*14839 SAN JOSE ST*	*NW 0 - 1/8 (0.043 mi.)*	*33*	*103*

Lower Elevation	Address	Direction / Distance	Map ID	Page
C&S TRUCKING CO	*9747 CEDROS AVE*	*SSW 1/8 - 1/4 (0.229 mi.)*	*48*	*115*

CONSENT: Major Legal settlements that establish responsibility and standards for cleanup at NPL (superfund) sites. Released periodically by U.S. District Courts after settlement by parties to litigation matters.

A review of the CONSENT list, as provided by EDR, and dated 12/31/2013 has revealed that there is 1 CONSENT site within approximately 1 mile of the target property.

Equal/Higher Elevation	Address	Direction / Distance	Map ID	Page
SAN FERNANDO VALLEY (AREA 1)	*NORTH HOLLYWOOD WELLFIE*	*NE 1/2 - 1 (0.770 mi.)*	*0*	*8*

EXECUTIVE SUMMARY

ROD: Record of Decision. ROD documents mandate a permanent remedy at an NPL (Superfund) site containing technical and health information to aid the cleanup.

A review of the ROD list, as provided by EDR, and dated 11/25/2013 has revealed that there is 1 ROD site within approximately 1 mile of the target property.

Equal/Higher Elevation	Address	Direction / Distance	Map ID	Page
SAN FERNANDO VALLEY (AREA 1)	***NORTH HOLLYWOOD WELLFIE***	***NE 1/2 - 1 (0.770 mi.)***	***0***	***8***

UIC: A listing of wells identified as underground injection wells, in the California Oil and Gas Wells database.

A review of the UIC list, as provided by EDR, and dated 07/14/2014 has revealed that there are 2 UIC sites within approximately 0.001 miles of the target property.

Equal/Higher Elevation	Address	Direction / Distance	Map ID	Page
CHEVRON U.S.A. INC.		0 - 1/8 (0.000 mi.)	12	88

Lower Elevation	Address	Direction / Distance	Map ID	Page
CHEVRON U.S.A. INC.		0 - 1/8 (0.000 mi.)	A14	89

HIST CORTESE: The sites for the list are designated by the State Water Resource Control Board [LUST], the Integrated Waste Board [SWF/LS], and the Department of Toxic Substances Control [CALSITES]. This listing is no longer updated by the state agency.

A review of the HIST CORTESE list, as provided by EDR, and dated 04/01/2001 has revealed that there are 4 HIST CORTESE sites within approximately 0.5 miles of the target property.

Equal/Higher Elevation	Address	Direction / Distance	Map ID	Page
SHELL OIL PRODUCTS CO	10685 LAUREL CNYN	NE 1/8 - 1/4 (0.166 mi.)	E42	108
UNOCAL #5704	***13812 VAN NUYS BLVD***	***E 1/4 - 1/2 (0.428 mi.)***	***57***	***127***

Lower Elevation	Address	Direction / Distance	Map ID	Page
ARCO FACILITY NO. 1575	***14761 DEVONSHIRE***	***0 - 1/8 (0.000 mi.)***	***A6***	***80***
UNOCAL #6987	***14200 VAN NUYS BLVD N***	***SE 1/4 - 1/2 (0.264 mi.)***	***G54***	***123***

Notify 65: Listings of all Proposition 65 incidents reported to counties by the State Water Resources Control Board and the Regional Water Quality Control Board. This database is no longer updated by the reporting agency.

A review of the Notify 65 list, as provided by EDR, and dated 10/21/1993 has revealed that there is 1 Notify 65 site within approximately 1 mile of the target property.

Equal/Higher Elevation	Address	Direction / Distance	Map ID	Page
CHEVRON USA INC.	***11113 SAN FERNANDO RD***	***NE 1/2 - 1 (0.822 mi.)***	***64***	***166***

EXECUTIVE SUMMARY

Los Angeles County Industrial Waste and Underground Storage Tank Sites.

A review of the LOS ANGELES CO. HMS list, as provided by EDR, and dated 03/31/2014 has revealed that there are 2 LOS ANGELES CO. HMS sites within approximately 0.001 miles of the target property.

Equal/Higher Elevation	Address	Direction / Distance	Map ID	Page
LA CO DPW FMD PACOIMA SG	10450 ARLETA AVE	0 - 1/8 (0.000 mi.)	C15	90
LA CO DPW FMD PACOIMA SG	10450 ARLETA AVE	0 - 1/8 (0.000 mi.)	C22	94

HAZNET: The data is extracted from the copies of hazardous waste manifests received each year by the DTSC. The annual volume of manifests is typically 700,000-1,000,000 annually, representing approximately 350,000-500,000 shipments. Data from non-California manifests & continuation sheets are not included at the present time. Data are from the manifests submitted without correction, and therefore many contain some invalid values for data elements such as generator ID, TSD ID, waste category, & disposal method. The source is the Department of Toxic Substance Control is the agency

A review of the HAZNET list, as provided by EDR, and dated 12/31/2013 has revealed that there are 9 HAZNET sites within approximately 0.001 miles of the target property.

Equal/Higher Elevation	Address	Direction / Distance	Map ID	Page
CLARITA CAPELLINI	14670 SAN JOSE ST	0 - 1/8 (0.000 mi.)	B4	79
LOS ANGELES COUNTY/PUBL WORKS	10450 ARLETA AVE	0 - 1/8 (0.000 mi.)	C10	87
NELLIE LOYA	14626 HIAWATHA ST.	0 - 1/8 (0.000 mi.)	13	89
MITCHELL MARCIALES	10541 LEV AVE	0 - 1/8 (0.000 mi.)	20	92
MIKE MARR	14600 SAN JOSE	0 - 1/8 (0.000 mi.)	24	95

Lower Elevation	Address	Direction / Distance	Map ID	Page
ARCO PRODUCTS FACILITY 1575	14761 DEVONSHIRE	0 - 1/8 (0.000 mi.)	D21	93
ARCO PRODUCTS COMPANY	14761 DEVONSHIRE	0 - 1/8 (0.000 mi.)	D27	97
BP WEST COAST PRODUCTS LLC 015	14761 DEVONSHIRE	0 - 1/8 (0.000 mi.)	D28	98
786 VENTURE INC	14761 DEVONSHIRE ST	0 - 1/8 (0.000 mi.)	D29	99

HWP: Detailed information on permitted hazardous waste facilities and corrective action ("cleanups") tracked in EnviroStor.

A review of the HWP list, as provided by EDR, and dated 11/24/2014 has revealed that there is 1 HWP site within approximately 1 mile of the target property.

Equal/Higher Elevation	Address	Direction / Distance	Map ID	Page
AMERICAN ETCHING AND MFG.	***13730 DESMOND ST***	***NE 1/2 - 1 (0.733 mi.)***	***H62***	***142***

EDR HIGH RISK HISTORICAL RECORDS

EDR Exclusive Records

EDR US Hist Auto Stat: EDR has searched selected national collections of business directories and has collected listings of potential gas station/filling station/service station sites that were available to EDR

researchers. EDR's review was limited to those categories of sources that might, in EDR's opinion, include gas station/filling station/service station establishments. The categories reviewed included, but were not limited to gas, gas station, gasoline station, filling station, auto, automobile repair, auto service station, service station, etc. This database falls within a category of information EDR classifies as "High Risk Historical Records", or HRHR. EDR's HRHR effort presents unique and sometimes proprietary data about past sites and operations that typically create environmental concerns, but may not show up in current government records searches.

A review of the EDR US Hist Auto Stat list, as provided by EDR, has revealed that there are 10 EDR US Hist Auto Stat sites within approximately 0.25 miles of the target property.

Equal/Higher Elevation	Address	Direction / Distance	Map ID	Page
Not reported	10540 ARLETA AVE	0 - 1/8 (0.000 mi.)	25	96
Not reported	10529 CEDROS AVE	NNW 0 - 1/8 (0.027 mi.)	32	102
Not reported	10870 LAUREL CANYON BL	NNE 1/8 - 1/4 (0.127 mi.)	37	105
Not reported	10685 LAUREL CANYON BL	NE 1/8 - 1/4 (0.166 mi.)	E40	107
Not reported	10375 SHARP AVE	ENE 1/8 - 1/4 (0.219 mi.)	47	115
Not reported	10108 ARLETA AVE	ESE 1/8 - 1/4 (0.248 mi.)	F50	117

Lower Elevation	Address	Direction / Distance	Map ID	Page
CHEVRON SERVICE	14800 DEVONSHIRE	0 - 1/8 (0.000 mi.)	17	90
Not reported	14805 DEVONSHIRE ST	0 - 1/8 (0.000 mi.)	A19	91
Not reported	14761 DEVONSHIRE ST	0 - 1/8 (0.000 mi.)	D30	100
Not reported	9930 OBECK AVE	SSE 1/8 - 1/4 (0.126 mi.)	36	105

EDR US Hist Cleaners: EDR has searched selected national collections of business directories and has collected listings of potential dry cleaner sites that were available to EDR researchers. EDR's review was limited to those categories of sources that might, in EDR's opinion, include dry cleaning establishments. The categories reviewed included, but were not limited to dry cleaners, cleaners, laundry, laundromat, cleaning/laundry, wash & dry etc. This database falls within a category of information EDR classifies as "High Risk Historical Records", or HRHR. EDR's HRHR effort presents unique and sometimes proprietary data about past sites and operations that typically create environmental concerns, but may not show up in current government records searches.

A review of the EDR US Hist Cleaners list, as provided by EDR, has revealed that there are 5 EDR US Hist Cleaners sites within approximately 0.25 miles of the target property.

Equal/Higher Elevation	Address	Direction / Distance	Map ID	Page
Not reported	14512 SAN JOSE ST	0 - 1/8 (0.000 mi.)	26	97
Not reported	10729 SHARP AVE	NNE 0 - 1/8 (0.103 mi.)	35	105
Not reported	13985 WEIDNER ST	NE 1/8 - 1/4 (0.244 mi.)	49	117

Lower Elevation	Address	Direction / Distance	Map ID	Page
Not reported	10100 WOODMAN AVE	0 - 1/8 (0.000 mi.)	16	90
Not reported	14829 LASSEN ST	SW 1/8 - 1/4 (0.209 mi.)	46	115

EXECUTIVE SUMMARY

EDR RECOVERED GOVERNMENT ARCHIVES

Exclusive Recovered Govt. Archives

RGA LUST: The EDR Recovered Government Archive Leaking Underground Storage Tank database provides a list of LUST incidents derived from historical databases and includes many records that no longer appear in current government lists. Compiled from Records formerly available from the State Water Resources Control Board in California.

A review of the RGA LUST list, as provided by EDR, has revealed that there is 1 RGA LUST site within approximately 0.001 miles of the target property.

Lower Elevation	Address	Direction / Distance	Map ID	Page
ARCO #1575	14761 DEVONSHIRE ST	0 - 1/8 (0.000 mi.)	D23	94

EXECUTIVE SUMMARY

Due to poor or inadequate address information, the following sites were not mapped. Count: 8 records.

Site Name	Database(s)
	CDL
	CDL
	CDL
	CDL
TUJUNGA WELLFIELD SITE DISCOVERY	CERCLIS
VALLEY BRICK LANDFILL	SWF/LF
THRIFTY #230	LUST
TUJUNGA WELLFIELD DISCOVERY PROJEC	ENVIROSTOR

OVERVIEW MAP - 4185299.2S

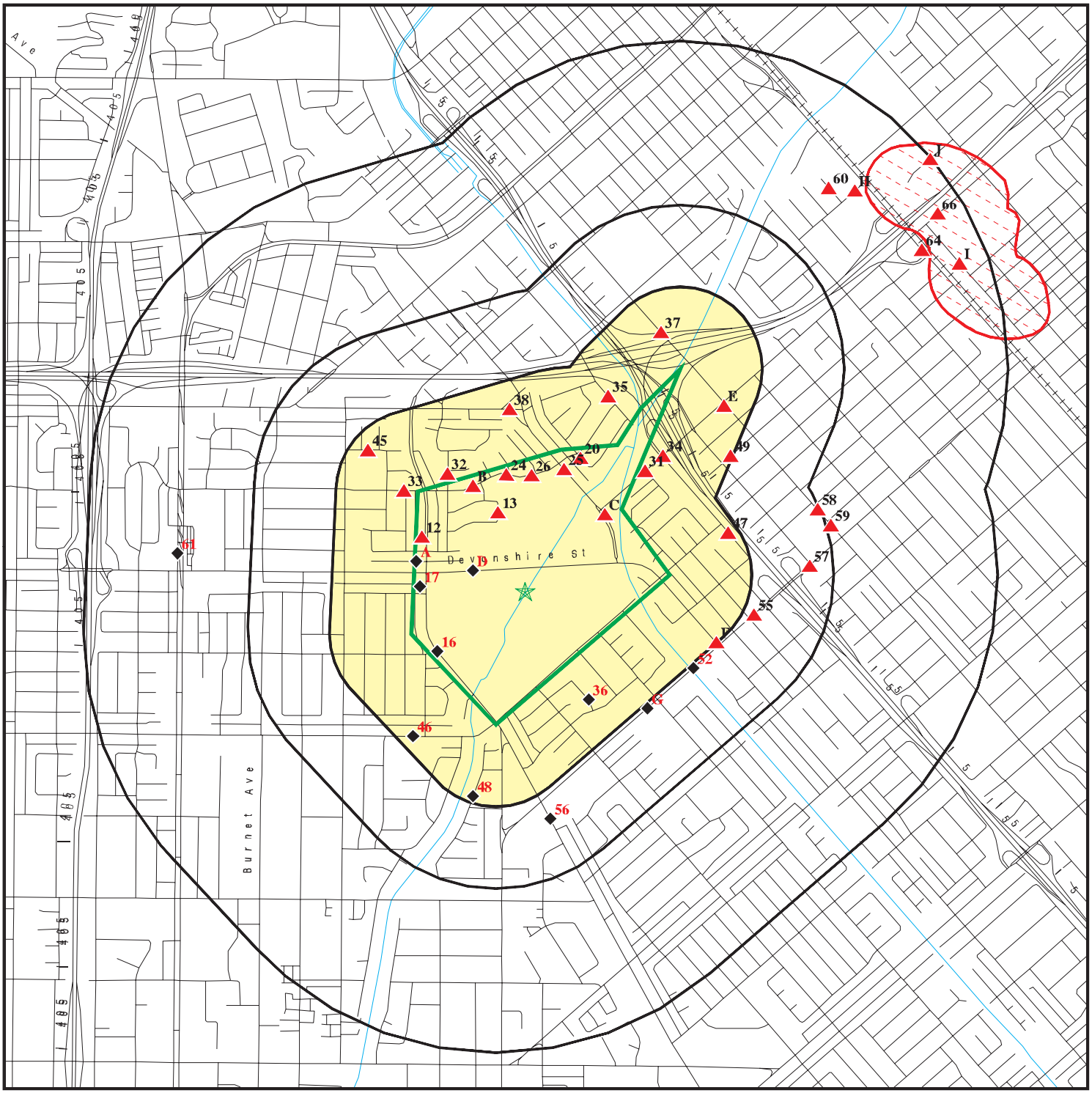

Target Property

Sites at elevations higher than or equal to the target property

Sites at elevations lower than the target property

Manufactured Gas Plants

National Priority List Sites

Dept. Defense Sites

0 1/4 1/2 1 Miles

Indian Reservations BIA

Oil & Gas pipelines from USGS

100-year flood zone

500-year flood zone

Areas of Concern

This report includes Interactive Map Layers to display and/or hide map information. The legend includes only those icons for the default map view.

SITE NAME:	Pacoima Spreading Grounds Lacfcd Site	CLIENT:	GeoSyntec Consultants
ADDRESS:	Intersection of Devonshire Street & Arleta Ave Mission Hills, Los A CA 91345	CONTACT:	Zahra Amini
		INQUIRY #:	4185299.2s
LAT/LONG:	34.2563 / 118.449	DATE:	January 19, 2015 2:10 pm

Copyright © 2015 EDR, Inc. © 2010 Tele Atlas Rel. 07/2009.

DETAIL MAP - 4185299.2S

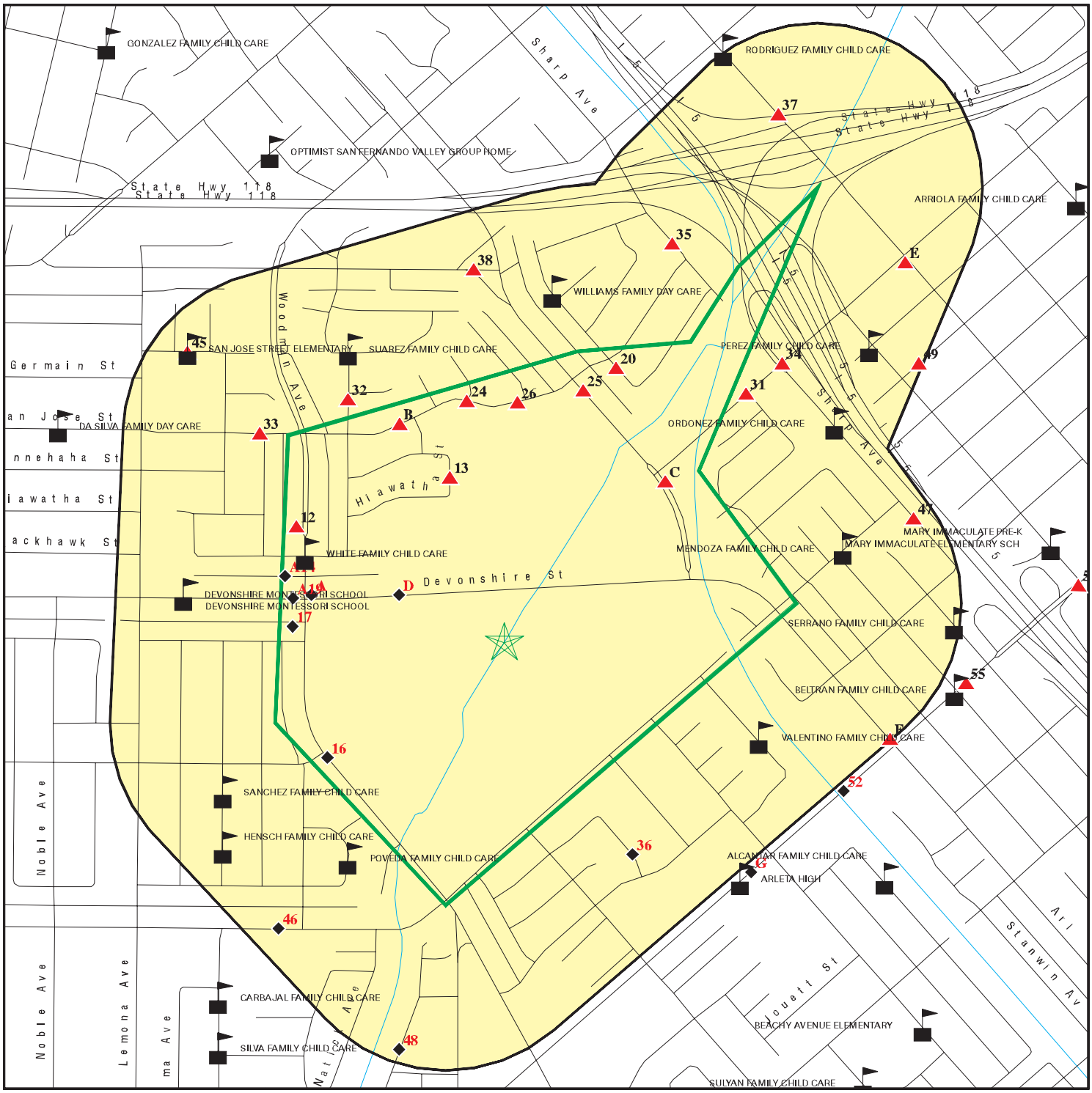

Target Property

Sites at elevations higher than or equal to the target property

Sites at elevations lower than the target property

Manufactured Gas Plants

Sensitive Receptors

National Priority List Sites

Dept. Defense Sites

Indian Reservations BIA

Oil & Gas pipelines from USGS

100-year flood zone

500-year flood zone

Areas of Concern

This report includes Interactive Map Layers to display and/or hide map information. The legend includes only those icons for the default map view.

SITE NAME:	Pacoima Spreading Grounds Lacfcd Site	CLIENT:	GeoSyntec Consultants
ADDRESS:	Intersection of Devonshire Street & Arleta Ave Mission Hills, Los A CA 91345	CONTACT:	Zahra Amini
		INQUIRY #:	4185299.2s
LAT/LONG:	34.2563 / 118.449	DATE:	January 19, 2015 2:11 pm

Copyright © 2015 EDR, Inc. © 2010 Tele Atlas Rel. 07/2009.

MAP FINDINGS SUMMARY

Database	Search Distance (Miles)	Target Property	< 1/8	1/8 - 1/4	1/4 - 1/2	1/2 - 1	> 1	Total Plotted
STANDARD ENVIRONMENTAL RECORDS								
Federal NPL site list								
NPL	1.000		0	0	0	1	NR	1
Proposed NPL	1.000		0	0	0	0	NR	0
NPL LIENS	0.001		0	NR	NR	NR	NR	0
Federal Delisted NPL site list								
Delisted NPL	1.000		0	0	0	0	NR	0
Federal CERCLIS list								
CERCLIS	0.500		0	0	0	NR	NR	0
FEDERAL FACILITY	0.500		0	0	0	NR	NR	0
Federal CERCLIS NFRAP site List								
CERC-NFRAP	0.500		0	0	0	NR	NR	0
Federal RCRA CORRACTS facilities list								
CORRACTS	1.000		0	0	0	1	NR	1
Federal RCRA non-CORRACTS TSD facilities list								
RCRA-TSDF	0.500		0	0	0	NR	NR	0
Federal RCRA generators list								
RCRA-LQG	0.250		0	1	NR	NR	NR	1
RCRA-SQG	0.250		1	1	NR	NR	NR	2
RCRA-CESQG	0.250		0	0	NR	NR	NR	0
Federal institutional controls / engineering controls registries								
US ENG CONTROLS	0.500		0	0	0	NR	NR	0
US INST CONTROL	0.500		0	0	0	NR	NR	0
LUCIS	0.500		0	0	0	NR	NR	0
Federal ERNS list								
ERNS	0.001		3	NR	NR	NR	NR	3
State- and tribal - equivalent NPL								
RESPONSE	1.000		0	0	0	2	NR	2
State- and tribal - equivalent CERCLIS								
ENVIROSTOR	1.000		0	0	1	12	NR	13
State and tribal landfill and/or solid waste disposal site lists								
SWF/LF	0.500		0	0	0	NR	NR	0
State and tribal leaking storage tank lists								
LUST	0.500		2	1	2	NR	NR	5

MAP FINDINGS SUMMARY

Database	Search Distance (Miles)	Target Property	< 1/8	1/8 - 1/4	1/4 - 1/2	1/2 - 1	> 1	Total Plotted
SLIC	0.500		0	0	0	NR	NR	0
INDIAN LUST	0.500		0	0	0	NR	NR	0
State and tribal registered storage tank lists								
UST	0.250		1	1	NR	NR	NR	2
AST	0.250		0	0	NR	NR	NR	0
INDIAN UST	0.250		0	0	NR	NR	NR	0
FEMA UST	0.250		0	0	NR	NR	NR	0
State and tribal voluntary cleanup sites								
INDIAN VCP	0.500		0	0	0	NR	NR	0
VCP	0.500		0	0	0	NR	NR	0
ADDITIONAL ENVIRONMENTAL RECORDS								
Local Brownfield lists								
US BROWNFIELDS	0.500		0	0	1	NR	NR	1
Local Lists of Landfill / Solid Waste Disposal Sites								
ODI	0.500		0	0	0	NR	NR	0
DEBRIS REGION 9	0.500		0	0	0	NR	NR	0
SWRCY	0.500		0	0	4	NR	NR	4
HAULERS	0.001		0	NR	NR	NR	NR	0
INDIAN ODI	0.500		0	0	0	NR	NR	0
WMUDS/SWAT	0.500		1	0	0	NR	NR	1
Local Lists of Hazardous waste / Contaminated Sites								
US CDL	0.001		0	NR	NR	NR	NR	0
HIST Cal-Sites	1.000		0	0	0	2	NR	2
SCH	0.250		0	0	NR	NR	NR	0
Toxic Pits	1.000		0	0	0	0	NR	0
AOCONCERN	1.000		0	0	0	0	NR	0
CDL	0.001		0	NR	NR	NR	NR	0
US HIST CDL	0.001		0	NR	NR	NR	NR	0
Local Lists of Registered Storage Tanks								
CA FID UST	0.250		2	2	NR	NR	NR	4
HIST UST	0.250		2	0	NR	NR	NR	2
SWEEPS UST	0.250		2	2	NR	NR	NR	4
Local Land Records								
LIENS 2	0.001		0	NR	NR	NR	NR	0
LIENS	0.001		0	NR	NR	NR	NR	0
DEED	0.500		0	0	0	NR	NR	0
Records of Emergency Release Reports								
HMIRS	0.001		0	NR	NR	NR	NR	0
CHMIRS	0.001		0	NR	NR	NR	NR	0

MAP FINDINGS SUMMARY

Database	Search Distance (Miles)	Target Property	< 1/8	1/8 - 1/4	1/4 - 1/2	1/2 - 1	> 1	Total Plotted
LDS	0.001		0	NR	NR	NR	NR	0
MCS	0.001		0	NR	NR	NR	NR	0
SPILLS 90	0.001		0	NR	NR	NR	NR	0
Other Ascertainable Records								
RCRA NonGen / NLR	0.250		1	1	NR	NR	NR	2
DOT OPS	0.001		0	NR	NR	NR	NR	0
DOD	1.000		0	0	0	0	NR	0
FUDS	1.000		0	0	0	0	NR	0
CONSENT	1.000		0	0	0	1	NR	1
ROD	1.000		0	0	0	1	NR	1
UMTRA	0.500		0	0	0	NR	NR	0
US MINES	0.250		0	0	NR	NR	NR	0
TRIS	0.001		0	NR	NR	NR	NR	0
TSCA	0.001		0	NR	NR	NR	NR	0
FTTS	0.001		0	NR	NR	NR	NR	0
HIST FTTS	0.001		0	NR	NR	NR	NR	0
SSTS	0.001		0	NR	NR	NR	NR	0
ICIS	0.001		0	NR	NR	NR	NR	0
PADS	0.001		0	NR	NR	NR	NR	0
MLTS	0.001		0	NR	NR	NR	NR	0
RADINFO	0.001		0	NR	NR	NR	NR	0
FINDS	0.001		0	NR	NR	NR	NR	0
RAATS	0.001		0	NR	NR	NR	NR	0
RMP	0.001		0	NR	NR	NR	NR	0
CA BOND EXP. PLAN	1.000		0	0	0	0	NR	0
UIC	0.001		2	NR	NR	NR	NR	2
NPDES	0.001		0	NR	NR	NR	NR	0
Cortese	0.500		0	0	0	NR	NR	0
HIST CORTESE	0.500		1	1	2	NR	NR	4
CUPA Listings	0.250		0	0	NR	NR	NR	0
Notify 65	1.000		0	0	0	1	NR	1
LA Co. Site Mitigation	0.001		0	NR	NR	NR	NR	0
DRYCLEANERS	0.250		0	0	NR	NR	NR	0
WIP	0.250		0	0	NR	NR	NR	0
LOS ANGELES CO. HMS	0.001		2	NR	NR	NR	NR	2
ENF	0.001		0	NR	NR	NR	NR	0
HAZNET	0.001		9	NR	NR	NR	NR	9
EMI	0.001		0	NR	NR	NR	NR	0
INDIAN RESERV	1.000		0	0	0	0	NR	0
SCRD DRYCLEANERS	0.500		0	0	0	NR	NR	0
US FIN ASSUR	0.001		0	NR	NR	NR	NR	0
EPA WATCH LIST	0.001		0	NR	NR	NR	NR	0
LEAD SMELTERS	0.001		0	NR	NR	NR	NR	0
PRP	0.001		0	NR	NR	NR	NR	0
2020 COR ACTION	0.250		0	0	NR	NR	NR	0
COAL ASH DOE	0.001		0	NR	NR	NR	NR	0
US AIRS	0.001		0	NR	NR	NR	NR	0
WDS	0.001		0	NR	NR	NR	NR	0
HWP	1.000		0	0	0	1	NR	1
HWT	0.250		0	0	NR	NR	NR	0

MAP FINDINGS SUMMARY

Database	Search Distance (Miles)	Target Property	< 1/8	1/8 - 1/4	1/4 - 1/2	1/2 - 1	> 1	Total Plotted
PROC	0.500		0	0	0	NR	NR	0
Financial Assurance	0.001		0	NR	NR	NR	NR	0
MWMP	0.250		0	0	NR	NR	NR	0
PCB TRANSFORMER	0.001		0	NR	NR	NR	NR	0
COAL ASH EPA	0.500		0	0	0	NR	NR	0
EDR HIGH RISK HISTORICAL RECORDS								
EDR Exclusive Records								
EDR MGP	1.000		0	0	0	0	NR	0
EDR US Hist Auto Stat	0.250		5	5	NR	NR	NR	10
EDR US Hist Cleaners	0.250		3	2	NR	NR	NR	5
EDR RECOVERED GOVERNMENT ARCHIVES								
Exclusive Recovered Govt. Archives								
RGA LF	0.001		0	NR	NR	NR	NR	0
RGA LUST	0.001		1	NR	NR	NR	NR	1

NOTES:

TP = Target Property

NR = Not Requested at this Search Distance

Sites may be listed in more than one database

NPL **Region** **NE** **1/2-1** **4068 ft.**	**SAN FERNANDO VALLEY (AREA 1)** **NORTH HOLLYWOOD WELLFIELD AREA** **NORTH HOLLYWOOD, CA 91601**	**NPL** **CERCLIS** **US ENG CONTROLS** **US INST CONTROL** **CONSENT** **ROD** **ICIS** **FINDS** **HIST Cal-Sites** **Cortese** **ENVIROSTOR** **PRP**	**1000709322** **CAD980894893**

NPL:

EPA ID:	CAD980894893
EPA Region:	09
Federal:	N
Final Date:	1986-06-10 00:00:00

Category Details:

NPL Status:	Currently on the Final NPL
Category Description:	Depth To Aquifer-<= 10 Feet
Category Value:	1
NPL Status:	Currently on the Final NPL
Category Description:	Distance To Nearest Population-> 0 And <= 1/4 Mile
Category Value:	10

Site Details:

Site Name:	SAN FERNANDO VALLEY (AREA 1)
Site Status:	Final
Site Zip:	91601
Site City:	NORTH HOLLYWOOD
Site State:	CA
Federal Site:	No
Site County:	LOS ANGELES
EPA Region:	09
Date Proposed:	10/15/84
Date Deleted:	Not reported
Date Finalized:	06/10/86

Substance Details:

NPL Status:	Currently on the Final NPL
Substance ID:	Not reported
Substance:	Not reported
CAS #:	Not reported
Pathway:	Not reported
Scoring:	Not reported
NPL Status:	Currently on the Final NPL
Substance ID:	U044
Substance:	CHLOROFORM
CAS #:	67-66-3
Pathway:	GROUND WATER PATHWAY
Scoring:	4
NPL Status:	Currently on the Final NPL
Substance ID:	U210

SAN FERNANDO VALLEY (AREA 1) (Continued) **1000709322**

Substance: TETRACHLOROETHENE
CAS #: 127-18-4
Pathway: GROUND WATER PATHWAY
Scoring: 2

NPL Status: Currently on the Final NPL
Substance ID: U211
Substance: CARBON TETRACHLORIDE
CAS #: 56-23-5
Pathway: GROUND WATER PATHWAY
Scoring: 4

NPL Status: Currently on the Final NPL
Substance ID: U228
Substance: TRICHLOROETHYLENE (TCE)
CAS #: 79-01-6
Pathway: GROUND WATER PATHWAY
Scoring: 2

Summary Details:

Conditions at proposal October 15, 1984): San Fernando Valley Area l) is an area of contaminated ground water in the vicinity of the North Hollywood section of the City of Los Angeles, Los Angeles County, California. This area is part of the San Fernando Valley Basin, a natural underground reservoir that represents an important source of drinking water for at least 3 million people in the Los Angeles metropolitan area. The contaminated ground water, which underlies an area of approximately 5,l56 acres, contains trichloroethylene TCE) and perchloroethylene PCE), and to a lesser extent, carbon tetrachloride and chloroform, according to analyses conducted by the California Department of Health Services, as well as numerous local government agencies. The State s recommended drinking water guideline for TCE and PCE 5 and 4 parts per billion respectively) are exceeded in a number of public wells in this area. To alleviate this contamination, wells are eithertaken out of service or blended with water from clean sources to ensure that the public receives water with TCE/PCE concentrations below the State s guidelines. Status June 10, 1986): EPA and the Los Angeles Department of Water and Power are entering into a cooperative agreement for a remedial investigation of the San Fernando Valley Basin and a feasibility study targeted at Area 1, the most contaminated area. The RI is scheduled to begin in early 1986.

Site Status Details:
NPL Status: Final
Proposed Date: 10/15/1984
Final Date: 06/10/1986
Deleted Date: Not reported

Narratives Details:
NPL Name: SAN FERNANDO VALLEY (AREA 1)
City: NORTH HOLLYWOOD
State: CA

CERCLIS:
Site ID: 0902251
EPA ID: CAD980894893

SAN FERNANDO VALLEY (AREA 1) (Continued) **1000709322**

Facility County:	LOS ANGELES
Short Name:	SAN FERNANDO VALLEY (AREA
Congressional District:	28
IFMS ID:	0959
SMSA Number:	4480
USGC Hydro Unit:	18070105
Federal Facility:	Not a Federal Facility
DMNSN Number:	9336.00000
Site Orphan Flag:	N
RCRA ID:	Not reported
USGS Quadrangle:	Not reported
Site Init By Prog:	Not reported
NFRAP Flag:	Not reported
Parent ID:	Not reported
RST Code:	I
EPA Region:	09
Classification:	Wells
Site Settings Code:	UR
NPL Status:	Currently on the Final NPL
DMNSN Unit Code:	ACRE
RBRAC Code:	Not reported
RResp Fed Agency Code:	Not reported
Non NPL Status:	Not reported
Non NPL Status Date:	/ /
Site Fips Code:	06037
CC Concurrence Date:	/ /
CC Concurrence FY:	Not reported
Alias EPA ID:	Not reported
Site FUDS Flag:	Not reported

CERCLIS Site Contact Name(s):

Contact ID:	13002702.00000
Contact Name:	Zizi Searles
Contact Tel:	(415) 972-3178
Contact Title:	Remedial Project Manager (RPM)
Contact Email:	Not reported
Contact ID:	13003854.00000
Contact Name:	Leslie Ramirez
Contact Tel:	(415) 972-3978
Contact Title:	Site Assessment Manager (SAM)
Contact Email:	Not reported
Contact ID:	13003858.00000
Contact Name:	Sharon Murray
Contact Tel:	(415) 972-4250
Contact Title:	Site Assessment Manager (SAM)
Contact Email:	Not reported
Contact ID:	13004003.00000
Contact Name:	Carl Brickner
Contact Tel:	Not reported
Contact Title:	Site Assessment Manager (SAM)
Contact Email:	Not reported
Contact ID:	13002904.00000
Contact Name:	Lisa Hanusiak

SAN FERNANDO VALLEY (AREA 1) (Continued) **1000709322**

Contact Tel: (415) 972-3152
Contact Title: Remedial Project Manager (RPM)
Contact Email: Not reported

Contact ID: 13002785.00000
Contact Name: Kelly Manheimer
Contact Tel: (415) 972-3290
Contact Title: Remedial Project Manager (RPM)
Contact Email: Not reported

Contact ID: 13004928.00000
Contact Name: Jamey Watt
Contact Tel: (415) 972-3175
Contact Title: Remedial Project Manager (RPM)
Contact Email: Not reported

CERCLIS Site Alias Name(s):
Alias ID: 101
Alias Name: SAN FERNANDO VALLEY- N HOLLYWOOD WELLFLD
Alias Address: Not reported
NORTH HOLLYWOOD & BURBANK, CA 91600
Alias ID: 201
Alias Name: NORTH HOLLYWOOD OPERABLE UNIT
Alias Address: Not reported
CA
Alias ID: 301
Alias Name: BURBANK OPERABLE UNIT
Alias Address: Not reported
CA
Alias ID: 302
Alias Name: SAN FERNANDO VALLEY (AREA 1)
Alias Address: NORTH HOLLYWOOD WELLFIELD AREA
NORTH HOLLYWOOD, CA 91601
Alias ID: 303
Alias Name: SAN FERNANDO VALLEY (AREA 1)
Alias Address: NORTH HOLLYWOOD WELLFIELD AREA
LOS ANGELES, CA 91601
Alias ID: 201
Alias ID: 301
Alias Comments: OPERABLE UNIT 1* BURBANK WELL FIELD IN VICINITY OF BURBANK AIRPORT & FACILITY. *
OPERABLE UNIT 2. *
BURBANK/LOCKHEED OPERABLE UNIT.

Site Description: The North Hollywood-Burbank Well Field is located within the North Hollywood National Priorities List (NPL) Site, which is one of four NPL sites in the San Fernando Valley. It is also located in the San Fernando Valley Groundwater Basin. The sites were proposed for inclusion on the NPL because of the discovery of trichloroethylene and other volatile organic contaminants (VOCs) in the groundwater. The San Fernando Valley Groundwater Basin comprises 112,000 acres of valley fill situated among the Coastal Ranges within the Los Angeles metropolitan area. The area is used for residential, commercial, and industrial purposes. Groundwater from the basin is distributed by various municipalities and water districts to the residents of the metropolitan area. The Los Angeles Department of Water and Power (DWP) operates the North Hollywood-Burbank Well Field to provide drinking water to the residents of the City of Los Angeles, located to the south of the San Fernando Valley. The San Fernando Groundwater Basin can provide drinking water for approximately 500,000 people

SAN FERNANDO VALLEY (AREA 1) (Continued) **1000709322**

residing in the San Fernando Valley and Los Angeles. In times of water shortages, the groundwater shortage can be drawn upon to supply about one million people. It is also an important source of water for the Cities of Burbank, Glendale, and San Fernando. The North Hollywood Operable Unit (NHOU) is one of two geographically-defined operable units within the San Fernando Valley (SFV) (Area 1) Superfund Site. The NHOU comprises approximately 4 square miles of contaminated groundwater underlying an area of mixed industrial, commercial, and residential land use in the community of North Hollywood (a district of the City of Los Angeles). The NHOU is approximately 15 miles north of downtown Los Angeles and immediately west of the City of Burbank, and has approximate Site boundaries of Sun Valley and Interstate 5 to the north, State Highway 170 and Lankershim Boulevard to the west, the Burbank Airport to the east, and Burbank Boulevard to the south. The EPA is the lead agency for the current and planned future groundwater remedial activities at the NHOU. The EPA's response activities at the NHOU are and have been conducted under the authority established in the federal Superfund law, the Comprehensive Environmental Response, Compensation, and Liability Act (CERCLA), as amended, 42 U.S.C. Section 9601 et seq. The lead state agency is the California Department of Toxic Substances Control (DTSC). The Los Angeles Regional Water Quality Control Board (RWQCB) has provided and continues to provide substantial support, particularly with the investigation and cleanup of sources of contamination in the SFV. The expected source of cleanup monies for the NHOU is an enforcement settlement with the Potentially Responsible Parties (PRPs). Prior to World War II, most land in the SFV was occupied by farms, orchards, and ranchland. By 1949, after the war, nearly all the land in Burbank and North Hollywood was occupied by housing developments, industrial facilities, retail establishments, and the Burbank Airport. Accompanying these land use changes in the 1940s was a substantial increase in population and groundwater withdrawals from the SFV. In the 1950s, the North Hollywood, Erwin, Whitnall, and Verdugo Well Fields were constructed by the Los Angeles Department of Water and Power (LADWP) in the North Hollywood area to meet the increasing demand for water. In 1968, groundwater withdrawals from the SFV were reduced to achieve "safe yield" from the basin, and more surface water was imported to the basin from external sources. In 1979, industrial contamination was found in groundwater in the San Gabriel Valley (to the east of the SFV), prompting the California Department of Public Health (CDPH; formerly the California Department of Health Services) to request that all major water providers in the region, including those in the SFV, sample and analyze groundwater for potential industrial contaminants. Trichloroethylene (TCE) and tetrachloroethylene (PCE) were consistently detected in a large number of production wells in the SFV at concentrations greater than Federal and State Maximum Contaminant Levels (MCLs) for drinking water. TCE and PCE were widely used in the San Fernando Valley starting in the 1940s for dry cleaning and for degreasing machinery. Disposal was not well regulated at that time, and releases volatile organic compound (VOC)-contaminated groundwater that extends from the NHOU to the southeast. To replace wells within the NHOU area contaminated by TCE and PCE, and to provide more operational flexibility for groundwater recharge and pumping in the SFV, LADWP constructed the Rinaldi-Toluca Well Field in 1988 and 1989, and the Tujunga Well Field in 1993. Based on the significant levels of groundwater contamination present in the SFV and the impact of that contamination on numerous municipal water supply wells, EPA added four SFV Sites to the National Priorities List (NPL) in 1986 and defined them as areas of regional groundwater contamination. Three of the four Sites (Areas 1, 2 and 4) are contiguous areas within whose boundaries are well fields that serve the water supply systems for the cities of Los Angeles, Burbank and Glendale. There is a large, continuous plume of groundwater contamination that runs through these three Sites. The fourth Site, Area 3,

SAN FERNANDO VALLEY (AREA 1) (Continued) **1000709322**

lies in the Verdugo basin, a geographically separate area of the eastern San Fernando Valley. In the SFV Area 1 Site, located at the upgradient end of the contaminated groundwater plume, the selection and implementation of the initial interim remedy - the Existing NHOU Extraction and Treatment System - for the LADWP's North Hollywood well field was given fast-track status because of the potential for contamination to spread to other well fields and areas of uncontaminated groundwater. In 1986, LADWP completed the Operable Unit Feasibility Study for the North Hollywood Well Field Area of the North Hollywood-Burbank NPL Site, which was the basis for selection and implementation of the Existing NHOU Extraction and Treatment System. The 1987 Record of Decision (ROD) for the Site selected the Existing NHOU Extraction and Treatment System as an interim groundwater containment remedy. In 1989, LADWP constructed the Existing NHOU Extraction and Treatment System with financial support from EPA. The Existing NHOU Extraction and Treatment System consists of eight groundwater extraction wells (NHE-1 through NHE-8), an air-stripping treatment system to remove VOCs from the extracted groundwater, activated carbon filters to remove VOCs from the air stream, and ancillary equipment. The treated groundwater is discharged into an LADWP blending facility where it is combined with water from other sources before entering the LADWP water supply system. The Existing NHOU Extraction and Treatment System commenced operation in December 1989 and remains in operation today. In 1989, EPA issued a ROD for the Burbank OU (BOU) of the SFV Area 1 Site. That ROD also selected an interim remedy (containment) for the VOC-contaminated groundwater within the Burbank area, where ten of the city's water supply wells had been shut down due to contamination. The BOU remedy, which provides treated water for the City of Burbank's water supply system, began operation in 1996 and remains in operation to this day. OU01 1991 ESD: In June 1986, the United States Environmental Protection Agency (EPA) evaluated the threat posed by a number of well fields within the San Fernando and Verdugo Groundwater Basins, and designated them as National Priorities List (NPL) hazardous substance sites. Industrial chemicals had been detected in groundwater from these areas. Although four sites in the basin were listed on the NPL, EPA and DWP are managing the investigation of the four sites and the adjacent area as a single project consistent with the Comprehensive Environmental Response, Compensation and Liability Act (CERCLA) Section 104(d)(4). The San Fernando Valley Groundwater Basin (SFVGB) has historically been, and continues to be, an important source of drinking water for the Los Angeles metropolitan area, including the unincorporated area of La Cresenta, and the cities of Burbank, Glendale, and San Fernando. The groundwater basin provides these communities with enough water to serve approximately 600,000 residents. Groundwater from the SFVGB is used for residential, commercial, and industrial purposes, and is especially important during years of drought. The groundwater that has become contaminated is difficult to replace. The current water supply from surface water may not always be available in the future because of periodic drought conditions and state and federal water rights issues. The Burbank Operable Unit (OU) was developed to address the areal extent of groundwater contamination that is presently generally located in the area of the Burbank Well Field and including any areas to which the groundwater contamination migrates. The Site is part of the SFV Area 1 (North Hollywood) NPL site and includes an area beyond that originally designated as SFV Area 1. The City of Burbank's production wells have been shut down because the water they produce contained trichloroethylene (TCE) and perchloroethylene (PCE) in concentrations exceeding state and federal maximum contaminant levels (MCLs). Consequently, the City of Burbank now purchases 100 percent of its water, which is imported supply, from the Metropolitan Water District of Southern California (MWD). On June 30, 1989, the U.S. Environmental Protection Agency (EPA) signed a Record of Decision (ROD) for the San Fernando

SAN FERNANDO VALLEY (AREA 1) (Continued) **1000709322**

Valley (SFV) Area 1 - Burbank Operable Unit (Burbank OU). The Burbank OU is the second OU, but is named OU03 at the SFV Area 1 NPL site. The purpose of this Explanation of Significant Differences (ESD) is to explain the significant differences between the interim remedial action originally selected in the 1989 ROD and the interim remedy which will be implemented at the Site. EPA is issuing this ESD in order to take into account technical data received after the ROD was signed in June of 1989 and to clarify any ambiguities regarding the selected remedy. An Explanation of Significant Differences addressing OU01 the San Fernando Site was completed in November, 1990. Operable Unit 3: The following gives a brief background of the Burbank Operable unit (OU) and a short summary of the remedy selected in the Record of Decision (ROD) and modified by Explanation of Significant Differences (ESD) 1. Further background information can be found in the ROD (dated June 30, 1989), and in ESD1 (dated November 20, 1990), as well as in other documents in the Burbank OU Administrative Record. In June 1986, the U.S. Environmental Protection Agency (EPA) evaluated the threat posed by groundwater contamination at a number of water supply wellfields within the San Fernando Valley and Verdugo groundwater basins. The chief contaminants of concern are trichloroethylene (TCE) and perchloroethylene (PCE). As a result of its investigation, EPA designated four wellfield areas as National Priorities List (NPL) sites. EPA is managing the four sites as a single project consistent with the Comprehensive Environmental Response, Compensation, and Liability Act (CERCLA) Section 104(d)(4). The San Fernando Valley Groundwater Basin has historically been an important source of drinking water for the Los Angeles metropolitan area, including the City of Burbank. The groundwater basin provides enough water to serve approximately 600,000 residents. Groundwater extracted from the basin is especially important during years of drought. Due to contamination by volatile organic chemicals (VOC), including TCE and PCE, beneficial use of the groundwater resource has been partially lost. Surface water supplies have replaced the lost resource, but are costly, and may not be available in the future due to periodic drought conditions and the potential for changing water rights policy. The Burbank OU is located within the San Fernando Valley groundwater basin and encompasses wellfields which were operated by the City of Burbank prior to being shut down as a result of contamination. The Burbank OU was specifically developed to address this areal extent of groundwater contamination. The City of Burbank's production wells have been shut down since the early 1980s because of the presence of TCE and PCE in concentrations exceeding federal and state Maximum Contaminant Levels (MCL). Consequently, the city purchases close to one hundred percent of its water from the Metropolitan Water District of Southern California, which supplies surface water imported from outside the San Fernando basin. (The city does operate a granular activated carbon groundwater extraction and treatment plant during parts of the year, but the contribution of this plant toward meeting the overall water demand is small). On June 30, 1989, EPA signed a Record of Decision (ROD) for the San Fernando Valley Area 1 Superfund Site, Burbank Operable Unit OU. On November 21, 1990, EPA signed an Explanation of Significant Differences (ESD1) modifying the interim remedial action selected in the ROD. A second ESD addressing the Burbank Operable Unit (Operable Unit 3) at the San Fernando Valley (Area 1) site was completed in February 1997. In December 1992, a remedial investigation (RI) for the SFV groundwater basin, including installation and subsequent regular monitoring of 84 groundwater wells, was completed under a cooperative agreement between EPA and the LADWP. The RI was conducted to evaluate the groundwater quality throughout the SFV basin and assist in identifying the best treatment method(s) and optimal locations to install groundwater treatment systems to address the SFV groundwater contamination EPA listed the SFV Sites as groundwater only, with the intent to focus on addressing the regional groundwater contamination, with an

SAN FERNANDO VALLEY (AREA 1) (Continued) **1000709322**

agreement with the state agencies to address the sources. From the late 1980s to late 1990s, EPA provided funds to RWQCB to conduct assessments of facilities in the SFV to determine the extent of solvent usage and to assess past and current chemical handling, storage, and disposal practices. These investigations were conducted pursuant to RWQCB's Well Investigation Program and resulted in source remediation activities under RWQCB oversight at several facilities within the SFV, including two within the NHOU. Source investigations and remediation activities are currently in progress under the lead of RWQCB and DTSC. In 1993, 1998, 2003, and 2008, EPA conducted five-year reviews (as required by CERCLA) to evaluate the protectiveness of the NHOU interim remedy. The Third NHOU Five-Year Review reported that the TCE and PCE groundwater plume that the remedy was designed to capture was migrating vertically and laterally beyond the remedy's zone of hydraulic control. This conclusion was based largely on EPA's evaluation of the current NHOU groundwater conditions and LADWP findings in the Draft Evaluation of the North Hollywood Operable Unit and Options to Enhance Its Effectiveness. The Final Evaluation of the North Hollywood Operable Unit and Options to Enhance Its Effectiveness also raised concerns regarding detections of total chromium and hexavalent chromium in extraction well NHE-2 of the NHOU interim remedy. Well NHE-2 is located just a short distance from the former Bendix facility, one of the major VOC sources in the NHOU. In July 2006, after a year of unusually high rainfall and rising groundwater levels in the SFV, the total chromium concentration detected at NHOU extraction well NHE-2 began to increase. Chromium was used in the metal plating and aerospace industry (metal fabrication), as well as for corrosion inhibition in industrial cooling towers, from the 1940s through the 1980s. It was also used extensively at the former Bendix facility. In 2007, the elevated concentrations of chromium at well NHE-2 caused total chromium concentrations in the combined NHOU treatment system effluent to exceed 30 micrograms per liter (ug/L) (60 percent of the state MCL). As a result, CDPH advised LADWP to shut down well NHE-2 or divert the water produced by the well to a nonpotable use. Chromium concentrations at this well have subsequently ranged from approximately 280 to 440 ug/L. In addition, 1, 4-dioxane was detected at well NHE-2 during 2007 and 2008 at concentrations ranging from 4 to 7 ug/L. There is no MCL for 1, 4-dioxane, but the CDPH notification level for 1, 4-dioxane is 3 ug/L. Extraction well NHE-2 remained shut down until September 2008, when the installation of a wellhead VOC treatment unit and modification of the discharge piping were completed, which allowed this well to return to service. The NHE-2 effluent, which still contains elevated levels of chromium, is currently discharged to the Los Angeles Bureau of Sanitation sewer system. This work was conducted by Honeywell International (a corporate successor to Bendix) as an interim measure, pursuant to a Cleanup and Abatement Order (CAO) from RWQCB that requires Honeywell to clean up the chromium contamination and to restore lost water caused by the shut down of well NHE-2. A long-term wellhead treatment system for well NHE-2, including treatment for chromium and, if necessary, 1,4-dioxane, to meet drinking water standards is expected to be implemented pursuant to the RWQCB CAO prior to the implementation of the NHOU Second Interim Remedy. Following construction and start up of the Existing NHOU Extraction and Treatment System, EPA issued general and special notice letters to PRPs. In 1996 and 1997, EPA reached two separate settlements with PRPs in which the settling parties agreed to pay EPA's past costs and fund operation of the Existing NHOU Extraction and Treatment System for the remainder of its fifteen-year term. In 2008, when the funds collected pursuant to the 1996 and 1997 settlements were close to being exhausted, EPA entered into an administrative order on consent with a number of parties from 1996 and 1997 settlements and issued a unilateral administrative order to the remaining viable parties in order to secure funding to continue operating the Existing NHOU Extraction and Treatment System until the Second

SAN FERNANDO VALLEY (AREA 1) (Continued) **1000709322**

Interim Remedy is constructed and operational. In preparation for the selection and implementation of the Second Interim Remedy, EPA has conducted additional PRP search activity. The RWQCB has issued CAOs to two parties in the NHOU. In December 1987, Lockheed was issued a CAO directing it to remediate contaminated soil and groundwater at Plant B-1 (in the BOU) and to complete a comprehensive Site assessment at all of Lockheed's other Burbank Airport facilities, including Plants B5 and C1 (in the NHOU), to determine the sources and extent of soil and groundwater contamination. The RWQCB issued a CAO in February 2003 to Honeywell International, Inc., for VOC and chromium contamination in groundwater at the former Bendix facility in North Hollywood. This CAO was amended in April 2007 to include investigation and mitigation of emerging contaminants at the former Bendix facility and to address elevated chromium concentrations at NHOU extraction well NHE-2. The land use in the SFV Area 1 Site, including the NHOU, consists of mixed residential, industrial, and commercial use. The SFV is fully developed and land uses in the NHOU are not expected to change significantly in the next 20 years or longer. The SFV groundwater basin is an important source of drinking water for the Los Angeles metropolitan area, including the cities of Los Angeles, Glendale, Burbank, and San Fernando. The SFV is located in the Upper Los Angeles River Area (ULARA), which is under adjudicated water rights regulated by the ULARA Watermaster. Through court action in 1975, the City of Los Angeles was granted rights to all groundwater in the San Fernando Basin that is derived from precipitation within ULARA. There are a number of production well fields in the eastern SFV, including six LADWP well fields located in or near the NHOU. The output from the existing NHOU remedy accounts for approximately 1 to 2 percent of LADWP's total extraction from the SFV groundwater basin. The need for drinking water development in the eastern SFV, including the NHOU, is expected to increase over the next 20 years as restrictions on importing water to Southern California increase and imported water becomes more expensive. An Interim ROD addressing Operable Unit 4 was completed in September 2009.

CERCLIS Assessment History:

Action Code:	001
Action:	DISCOVERY
Date Started:	/ /
Date Completed:	12/01/83
Priority Level:	Not reported
Operable Unit:	SITEWIDE
Primary Responsibility:	State, Fund Financed
Planning Status:	Not reported
Urgency Indicator:	Not reported
Action Anomaly:	Not reported

For detailed financial records, contact EDR for a Site Report.:

Action Code:	001
Action:	HAZARD RANKING SYSTEM PACKAGE
Date Started:	/ /
Date Completed:	04/01/84
Priority Level:	Not reported
Operable Unit:	SITEWIDE
Primary Responsibility:	State, Fund Financed
Planning Status:	Not reported
Urgency Indicator:	Not reported
Action Anomaly:	Not reported

SAN FERNANDO VALLEY (AREA 1) (Continued) **1000709322**

For detailed financial records, contact EDR for a Site Report.:

Action Code:	001
Action:	SITE INSPECTION
Date Started:	/ /
Date Completed:	04/01/84
Priority Level:	Higher priority for further assessment
Operable Unit:	SITEWIDE
Primary Responsibility:	State, Fund Financed
Planning Status:	Not reported
Urgency Indicator:	Not reported
Action Anomaly:	Not reported

For detailed financial records, contact EDR for a Site Report.:

Action Code:	001
Action:	PRELIMINARY ASSESSMENT
Date Started:	/ /
Date Completed:	04/01/84
Priority Level:	Higher priority for further assessment
Operable Unit:	SITEWIDE
Primary Responsibility:	State, Fund Financed
Planning Status:	Not reported
Urgency Indicator:	Not reported
Action Anomaly:	Not reported

For detailed financial records, contact EDR for a Site Report.:

Action Code:	001
Action:	PROPOSAL TO NATIONAL PRIORITIES LIST
Date Started:	/ /
Date Completed:	10/15/84
Priority Level:	Not reported
Operable Unit:	SITEWIDE
Primary Responsibility:	EPA Fund-Financed
Planning Status:	Not reported
Urgency Indicator:	Not reported
Action Anomaly:	Not reported

For detailed financial records, contact EDR for a Site Report.:

Action Code:	001
Action:	NATIONAL PRIORITIES LIST RESPONSIBLE PARTY SEARCH
Date Started:	09/30/84
Date Completed:	08/15/85
Priority Level:	Not reported
Operable Unit:	SITEWIDE
Primary Responsibility:	Federal Enforcement
Planning Status:	Not reported
Urgency Indicator:	Not reported
Action Anomaly:	Not reported

For detailed financial records, contact EDR for a Site Report.:

Action Code:	001

SAN FERNANDO VALLEY (AREA 1) (Continued) **1000709322**

Action:	FINAL LISTING ON NATIONAL PRIORITIES LIST
Date Started:	/ /
Date Completed:	06/10/86
Priority Level:	Not reported
Operable Unit:	SITEWIDE
Primary Responsibility:	EPA Fund-Financed
Planning Status:	Not reported
Urgency Indicator:	Not reported
Action Anomaly:	Not reported

For detailed financial records, contact EDR for a Site Report.:

Action Code:	001
Action:	COMBINED REMEDIAL INVESTIGATION/FEASIBILITY STUDY
Date Started:	08/16/85
Date Completed:	09/24/87
Priority Level:	Not reported
Operable Unit:	NORTH HOLLYWOOD
Primary Responsibility:	State, Fund Financed
Planning Status:	Primary
Urgency Indicator:	Not reported
Action Anomaly:	Not reported

For detailed financial records, contact EDR for a Site Report.:

Action Code:	001
Action:	REMEDIAL DESIGN
Date Started:	04/01/87
Date Completed:	09/24/87
Priority Level:	Not reported
Operable Unit:	NORTH HOLLYWOOD
Primary Responsibility:	State, Fund Financed
Planning Status:	Primary
Urgency Indicator:	Not reported
Action Anomaly:	Not reported

For detailed financial records, contact EDR for a Site Report.:

Action Code:	003
Action:	RECORD OF DECISION
Date Started:	/ /
Date Completed:	09/24/87
Priority Level:	Not reported
Operable Unit:	NORTH HOLLYWOOD
Primary Responsibility:	EPA Fund-Financed
Planning Status:	Primary
Urgency Indicator:	Not reported
Action Anomaly:	Not reported

For detailed financial records, contact EDR for a Site Report.:

Action Code:	003
Action:	Notice Letters Issued
Date Started:	/ /
Date Completed:	08/24/88
Priority Level:	Not reported
Operable Unit:	SITEWIDE

SAN FERNANDO VALLEY (AREA 1) (Continued) **1000709322**

Primary Responsibility: EPA Fund-Financed
Planning Status: Not reported
Urgency Indicator: Not reported
Action Anomaly: Not reported

For detailed financial records, contact EDR for a Site Report.:

Action Code: 002
Action: Notice Letters Issued
Date Started: / /
Date Completed: 04/13/89
Priority Level: Not reported
Operable Unit: SITEWIDE
Primary Responsibility: EPA Fund-Financed
Planning Status: Not reported
Urgency Indicator: Not reported
Action Anomaly: Not reported

For detailed financial records, contact EDR for a Site Report.:

Action Code: 003
Action: COMBINED REMEDIAL INVESTIGATION/FEASIBILITY STUDY
Date Started: 01/15/88
Date Completed: 06/30/89
Priority Level: Not reported
Operable Unit: BURBANK
Primary Responsibility: State, Fund Financed
Planning Status: Primary
Urgency Indicator: Not reported
Action Anomaly: Not reported

For detailed financial records, contact EDR for a Site Report.:

Action Code: 001
Action: Special Notice Issued
Date Started: / /
Date Completed: 06/30/89
Priority Level: Not reported
Operable Unit: SITEWIDE
Primary Responsibility: Federal Enforcement
Planning Status: Not reported
Urgency Indicator: Not reported
Action Anomaly: Not reported

For detailed financial records, contact EDR for a Site Report.:

Action Code: 002
Action: RECORD OF DECISION
Date Started: / /
Date Completed: 06/30/89
Priority Level: Not reported
Operable Unit: BURBANK
Primary Responsibility: EPA Fund-Financed
Planning Status: Primary
Urgency Indicator: Not reported
Action Anomaly: Not reported

SAN FERNANDO VALLEY (AREA 1) (Continued) **1000709322**

For detailed financial records, contact EDR for a Site Report.:

Action Code:	002
Action:	Special Notice Issued
Date Started:	/ /
Date Completed:	05/04/90
Priority Level:	Not reported
Operable Unit:	SITEWIDE
Primary Responsibility:	Federal Enforcement
Planning Status:	Not reported
Urgency Indicator:	Not reported
Action Anomaly:	Not reported

For detailed financial records, contact EDR for a Site Report.:

Action Code:	001
Action:	REMOVAL ASSESSMENT
Date Started:	08/29/90
Date Completed:	08/29/90
Priority Level:	Not reported
Operable Unit:	BURBANK
Primary Responsibility:	EPA Fund-Financed
Planning Status:	Primary
Urgency Indicator:	Not reported
Action Anomaly:	Not reported

For detailed financial records, contact EDR for a Site Report.:

Action Code:	001
Action:	UNILATERAL ADMIN ORDER
Date Started:	/ /
Date Completed:	08/30/90
Priority Level:	Not reported
Operable Unit:	SITEWIDE
Primary Responsibility:	Federal Enforcement
Planning Status:	Primary
Urgency Indicator:	Not reported
Action Anomaly:	Not reported

For detailed financial records, contact EDR for a Site Report.:

Action Code:	001
Action:	Notice Letters Issued
Date Started:	/ /
Date Completed:	08/30/90
Priority Level:	Not reported
Operable Unit:	SITEWIDE
Primary Responsibility:	Federal Enforcement
Planning Status:	Not reported
Urgency Indicator:	Not reported
Action Anomaly:	Not reported

For detailed financial records, contact EDR for a Site Report.:

Action Code:	001

SAN FERNANDO VALLEY (AREA 1) (Continued) **1000709322**

Action:	Explanation Of Significant Differences
Date Started:	/ /
Date Completed:	11/12/90
Priority Level:	Not reported
Operable Unit:	BURBANK
Primary Responsibility:	Not reported
Planning Status:	Not reported
Urgency Indicator:	Not reported
Action Anomaly:	Not reported

For detailed financial records, contact EDR for a Site Report.:

Action Code:	003
Action:	Special Notice Issued
Date Started:	/ /
Date Completed:	11/20/90
Priority Level:	Not reported
Operable Unit:	SITEWIDE
Primary Responsibility:	Federal Enforcement
Planning Status:	Not reported
Urgency Indicator:	Not reported
Action Anomaly:	Not reported

For detailed financial records, contact EDR for a Site Report.:

Action Code:	001
Action:	REMEDIAL DESIGN/REMEDIAL ACTION NEGOTIATIONS
Date Started:	05/04/89
Date Completed:	03/28/91
Priority Level:	Not reported
Operable Unit:	SITEWIDE
Primary Responsibility:	Federal Enforcement
Planning Status:	Primary
Urgency Indicator:	Not reported
Action Anomaly:	Not reported

For detailed financial records, contact EDR for a Site Report.:

Action Code:	001
Action:	REMOVAL
Date Started:	08/27/90
Date Completed:	05/23/91
Priority Level:	Cleaned up
Operable Unit:	BURBANK
Primary Responsibility:	EPA Fund-Financed
Planning Status:	Primary
Urgency Indicator:	Time Critical
Action Anomaly:	Not reported

For detailed financial records, contact EDR for a Site Report.:

Action Code:	001
Action:	REMOVAL COMMUNITY RELATIONS
Date Started:	09/11/90
Date Completed:	05/23/91
Priority Level:	Not reported

SAN FERNANDO VALLEY (AREA 1) (Continued) **1000709322**

Operable Unit:	BURBANK
Primary Responsibility:	EPA Fund-Financed
Planning Status:	Not reported
Urgency Indicator:	Not reported
Action Anomaly:	Not reported

For detailed financial records, contact EDR for a Site Report.:

Action Code:	002
Action:	REMOVAL ASSESSMENT
Date Started:	06/17/91
Date Completed:	06/17/91
Priority Level:	Not reported
Operable Unit:	BURBANK
Primary Responsibility:	EPA Fund-Financed
Planning Status:	Primary
Urgency Indicator:	Not reported
Action Anomaly:	Not reported

For detailed financial records, contact EDR for a Site Report.:

Action Code:	001
Action:	REMEDIAL ACTION
Date Started:	08/06/87
Date Completed:	09/04/91
Priority Level:	Not reported
Operable Unit:	NORTH HOLLYWOOD
Primary Responsibility:	State, Fund Financed
Planning Status:	Primary
Urgency Indicator:	Not reported
Action Anomaly:	Not reported

For detailed financial records, contact EDR for a Site Report.:

Action Code:	003
Action:	NATIONAL PRIORITIES LIST RESPONSIBLE PARTY SEARCH
Date Started:	08/16/90
Date Completed:	09/30/91
Priority Level:	Not reported
Operable Unit:	SITEWIDE
Primary Responsibility:	Federal Enforcement
Planning Status:	Primary
Urgency Indicator:	Not reported
Action Anomaly:	Not reported

For detailed financial records, contact EDR for a Site Report.:

Action Code:	001
Action:	CONSENT DECREE
Date Started:	03/28/91
Date Completed:	03/25/92
Priority Level:	Not reported
Operable Unit:	SITEWIDE
Primary Responsibility:	Federal Enforcement
Planning Status:	Primary
Urgency Indicator:	Not reported

SAN FERNANDO VALLEY (AREA 1) (Continued) **1000709322**

Action Anomaly: Not reported

For detailed financial records, contact EDR for a Site Report.:

Action Code: 002
Action: UNILATERAL ADMIN ORDER
Date Started: / /
Date Completed: 03/26/92
Priority Level: Not reported
Operable Unit: SITEWIDE
Primary Responsibility: Federal Enforcement
Planning Status: Primary
Urgency Indicator: Not reported
Action Anomaly: Not reported

For detailed financial records, contact EDR for a Site Report.:

Action Code: 001
Action: RISK/HEALTH ASSESSMENT
Date Started: / /
Date Completed: 12/15/92
Priority Level: Not reported
Operable Unit: BASINWIDE
Primary Responsibility: State, Fund Financed
Planning Status: Not reported
Urgency Indicator: Not reported
Action Anomaly: Not reported

For detailed financial records, contact EDR for a Site Report.:

Action Code: 001
Action: ECOLOGICAL RISK ASSESSMENT
Date Started: / /
Date Completed: 12/15/92
Priority Level: Not reported
Operable Unit: BASINWIDE
Primary Responsibility: State, Fund Financed
Planning Status: Not reported
Urgency Indicator: Not reported
Action Anomaly: Not reported

For detailed financial records, contact EDR for a Site Report.:

Action Code: 001
Action: PREPARATION OF COST DOCUMENT PACKAGE
Date Started: / /
Date Completed: 06/17/93
Priority Level: Not reported
Operable Unit: SITEWIDE
Primary Responsibility: Federal Enforcement
Planning Status: Primary
Urgency Indicator: Not reported
Action Anomaly: Not reported

For detailed financial records, contact EDR for a Site Report.:

SAN FERNANDO VALLEY (AREA 1) (Continued) **1000709322**

Action Code:	004
Action:	NATIONAL PRIORITIES LIST RESPONSIBLE PARTY SEARCH
Date Started:	09/25/89
Date Completed:	06/30/93
Priority Level:	Not reported
Operable Unit:	SITEWIDE
Primary Responsibility:	Federal Enforcement
Planning Status:	Primary
Urgency Indicator:	Not reported
Action Anomaly:	Not reported

For detailed financial records, contact EDR for a Site Report.:

Action Code:	001
Action:	FIVE-YEAR REVIEW
Date Started:	07/08/93
Date Completed:	07/08/93
Priority Level:	Not reported
Operable Unit:	NORTH HOLLYWOOD
Primary Responsibility:	EPA Fund-Financed
Planning Status:	Primary
Urgency Indicator:	Not reported
Action Anomaly:	Not reported

For detailed financial records, contact EDR for a Site Report.:

Action Code:	001
Action:	POTENTIALLY RESPONSIBLE PARTY REMEDIAL DESIGN
Date Started:	03/25/92
Date Completed:	11/22/93
Priority Level:	Not reported
Operable Unit:	BURBANK
Primary Responsibility:	Responsible Party
Planning Status:	Primary
Urgency Indicator:	Not reported
Action Anomaly:	Phased Completion

For detailed financial records, contact EDR for a Site Report.:

Action Code:	003
Action:	POTENTIALLY RESPONSIBLE PARTY REMEDIAL DESIGN
Date Started:	07/27/92
Date Completed:	11/22/93
Priority Level:	Not reported
Operable Unit:	BURBANK
Primary Responsibility:	Responsible Party
Planning Status:	Primary
Urgency Indicator:	Not reported
Action Anomaly:	Not reported

For detailed financial records, contact EDR for a Site Report.:

Action Code:	003
Action:	UNILATERAL ADMIN ORDER
Date Started:	/ /
Date Completed:	02/18/94
Priority Level:	Not reported

SAN FERNANDO VALLEY (AREA 1) (Continued) **1000709322**

Operable Unit: SITEWIDE
Primary Responsibility: Federal Enforcement
Planning Status: Primary
Urgency Indicator: Not reported
Action Anomaly: Not reported

For detailed financial records, contact EDR for a Site Report.:

Action Code: 002
Action: PREPARATION OF COST DOCUMENT PACKAGE
Date Started: 03/24/94
Date Completed: 06/24/94
Priority Level: Not reported
Operable Unit: SITEWIDE
Primary Responsibility: Federal Enforcement
Planning Status: Not reported
Urgency Indicator: Not reported
Action Anomaly: Not reported

For detailed financial records, contact EDR for a Site Report.:

Action Code: 001
Action: POTENTIALLY RESPONSIBLE PARTY REMEDIAL INVESTIGATION
Date Started: 02/18/94
Date Completed: 09/09/94
Priority Level: Not reported
Operable Unit: BASINWIDE
Primary Responsibility: Responsible Party
Planning Status: Not reported
Urgency Indicator: Not reported
Action Anomaly: Not reported

For detailed financial records, contact EDR for a Site Report.:

Action Code: 001
Action: POTENTIALLY RESPONSIBLE PARTY REMEDIAL INVESTIGATION/FEASIBILITY STUDY
Date Started: 02/18/94
Date Completed: 09/09/94
Priority Level: Not reported
Operable Unit: BASINWIDE
Primary Responsibility: Responsible Party
Planning Status: Primary
Urgency Indicator: Not reported
Action Anomaly: Not reported

For detailed financial records, contact EDR for a Site Report.:

Action Code: 003
Action: PREPARATION OF COST DOCUMENT PACKAGE
Date Started: 09/04/94
Date Completed: 02/13/95
Priority Level: Not reported
Operable Unit: SITEWIDE
Primary Responsibility: Federal Enforcement
Planning Status: Not reported

SAN FERNANDO VALLEY (AREA 1) (Continued) **1000709322**

Urgency Indicator: Not reported
Action Anomaly: Not reported

For detailed financial records, contact EDR for a Site Report.:

Action Code: 004
Action: PREPARATION OF COST DOCUMENT PACKAGE
Date Started: 10/17/95
Date Completed: 01/26/96
Priority Level: Not reported
Operable Unit: SITEWIDE
Primary Responsibility: Federal Enforcement
Planning Status: Primary
Urgency Indicator: Not reported
Action Anomaly: Not reported

For detailed financial records, contact EDR for a Site Report.:

Action Code: 003
Action: Lodged By DOJ
Date Started: / /
Date Completed: 02/21/96
Priority Level: Not reported
Operable Unit: SITEWIDE
Primary Responsibility: Federal Enforcement
Planning Status: Not reported
Urgency Indicator: Not reported
Action Anomaly: Not reported

For detailed financial records, contact EDR for a Site Report.:

Action Code: 001
Action: Lodged By DOJ
Date Started: / /
Date Completed: 03/14/96
Priority Level: Not reported
Operable Unit: SITEWIDE
Primary Responsibility: Federal Enforcement
Planning Status: Not reported
Urgency Indicator: Not reported
Action Anomaly: Not reported

For detailed financial records, contact EDR for a Site Report.:

Action Code: 005
Action: CONSENT DECREE
Date Started: 01/02/96
Date Completed: 07/01/96
Priority Level: Not reported
Operable Unit: SITEWIDE
Primary Responsibility: Federal Enforcement
Planning Status: Primary
Urgency Indicator: Not reported
Action Anomaly: Not reported

For detailed financial records, contact EDR for a Site Report.:

SAN FERNANDO VALLEY (AREA 1) (Continued) **1000709322**

Action Code:	004
Action:	CONSENT DECREE
Date Started:	02/12/96
Date Completed:	08/01/96
Priority Level:	Not reported
Operable Unit:	SITEWIDE
Primary Responsibility:	Federal Enforcement
Planning Status:	Primary
Urgency Indicator:	Not reported
Action Anomaly:	Not reported

For detailed financial records, contact EDR for a Site Report.:

Action Code:	001
Action:	SECTION 107 LITIGATION
Date Started:	03/19/93
Date Completed:	01/14/97
Priority Level:	Not reported
Operable Unit:	SITEWIDE
Primary Responsibility:	Federal Enforcement
Planning Status:	Primary
Urgency Indicator:	Not reported
Action Anomaly:	Not reported

For detailed financial records, contact EDR for a Site Report.:

Action Code:	001
Action:	COST RECOVERY NEGOTIATIONS
Date Started:	07/16/93
Date Completed:	01/14/97
Priority Level:	Not reported
Operable Unit:	SITEWIDE
Primary Responsibility:	Federal Enforcement
Planning Status:	Primary
Urgency Indicator:	Not reported
Action Anomaly:	Not reported

For detailed financial records, contact EDR for a Site Report.:

Action Code:	002
Action:	Explanation Of Significant Differences
Date Started:	/ /
Date Completed:	02/12/97
Priority Level:	Not reported
Operable Unit:	BURBANK
Primary Responsibility:	Not reported
Planning Status:	Not reported
Urgency Indicator:	Not reported
Action Anomaly:	Not reported

For detailed financial records, contact EDR for a Site Report.:

Action Code:	002
Action:	Lodged By DOJ
Date Started:	/ /
Date Completed:	02/18/97

SAN FERNANDO VALLEY (AREA 1) (Continued) **1000709322**

Priority Level:	Not reported
Operable Unit:	SITEWIDE
Primary Responsibility:	Federal Enforcement
Planning Status:	Not reported
Urgency Indicator:	Not reported
Action Anomaly:	Not reported

For detailed financial records, contact EDR for a Site Report.:

Action Code:	004
Action:	Lodged By DOJ
Date Started:	/ /
Date Completed:	02/18/97
Priority Level:	Not reported
Operable Unit:	SITEWIDE
Primary Responsibility:	Federal Enforcement
Planning Status:	Not reported
Urgency Indicator:	Not reported
Action Anomaly:	Not reported

For detailed financial records, contact EDR for a Site Report.:

Action Code:	006
Action:	CONSENT DECREE
Date Started:	01/14/97
Date Completed:	05/14/97
Priority Level:	Not reported
Operable Unit:	SITEWIDE
Primary Responsibility:	Federal Enforcement
Planning Status:	Primary
Urgency Indicator:	Not reported
Action Anomaly:	Not reported

For detailed financial records, contact EDR for a Site Report.:

Action Code:	007
Action:	CONSENT DECREE
Date Started:	/ /
Date Completed:	05/14/97
Priority Level:	Not reported
Operable Unit:	SITEWIDE
Primary Responsibility:	Federal Enforcement
Planning Status:	Not reported
Urgency Indicator:	Not reported
Action Anomaly:	Not reported

For detailed financial records, contact EDR for a Site Report.:

Action Code:	002
Action:	REMEDIAL DESIGN/REMEDIAL ACTION NEGOTIATIONS
Date Started:	05/04/94
Date Completed:	08/07/97
Priority Level:	Not reported
Operable Unit:	SITEWIDE
Primary Responsibility:	Federal Enforcement

SAN FERNANDO VALLEY (AREA 1) (Continued) **1000709322**

Planning Status: Primary
Urgency Indicator: Not reported
Action Anomaly: Not reported

For detailed financial records, contact EDR for a Site Report.:

Action Code: 002
Action: POTENTIALLY RESPONSIBLE PARTY REMEDIAL DESIGN
Date Started: 03/25/92
Date Completed: 09/30/97
Priority Level: Not reported
Operable Unit: BURBANK
Primary Responsibility: Responsible Party
Planning Status: Primary
Urgency Indicator: Not reported
Action Anomaly: Phased Start

For detailed financial records, contact EDR for a Site Report.:

Action Code: 005
Action: Lodged By DOJ
Date Started: / /
Date Completed: 03/17/98
Priority Level: Not reported
Operable Unit: SITEWIDE
Primary Responsibility: Federal Enforcement
Planning Status: Not reported
Urgency Indicator: Not reported
Action Anomaly: Not reported

For detailed financial records, contact EDR for a Site Report.:

Action Code: 002
Action: CONSENT DECREE
Date Started: 08/07/97
Date Completed: 06/22/98
Priority Level: Not reported
Operable Unit: SITEWIDE
Primary Responsibility: Federal Enforcement
Planning Status: Primary
Urgency Indicator: Not reported
Action Anomaly: Not reported

For detailed financial records, contact EDR for a Site Report.:

Action Code: 001
Action: ADMINISTRATIVE ORDER ON CONSENT
Date Started: / /
Date Completed: 06/30/98
Priority Level: Not reported
Operable Unit: SITEWIDE
Primary Responsibility: Federal Enforcement
Planning Status: Not reported
Urgency Indicator: Not reported
Action Anomaly: Not reported

For detailed financial records, contact EDR for a Site Report.:

SAN FERNANDO VALLEY (AREA 1) (Continued) **1000709322**

Action Code:	002
Action:	FIVE-YEAR REVIEW
Date Started:	/ /
Date Completed:	08/17/98
Priority Level:	Not reported
Operable Unit:	NORTH HOLLYWOOD
Primary Responsibility:	EPA Fund-Financed
Planning Status:	Primary
Urgency Indicator:	Not reported
Action Anomaly:	Not reported

For detailed financial records, contact EDR for a Site Report.:

Action Code:	002
Action:	ADMINISTRATIVE ORDER ON CONSENT
Date Started:	/ /
Date Completed:	12/30/98
Priority Level:	Not reported
Operable Unit:	SITEWIDE
Primary Responsibility:	Federal Enforcement
Planning Status:	Not reported
Urgency Indicator:	Not reported
Action Anomaly:	Not reported

For detailed financial records, contact EDR for a Site Report.:

Action Code:	001
Action:	LONG TERM RESPONSE ACTION
Date Started:	12/01/89
Date Completed:	12/01/99
Priority Level:	Not reported
Operable Unit:	NORTH HOLLYWOOD
Primary Responsibility:	State, Fund Financed
Planning Status:	Primary
Urgency Indicator:	Not reported
Action Anomaly:	Not reported

For detailed financial records, contact EDR for a Site Report.:

Action Code:	003
Action:	FIVE-YEAR REVIEW
Date Started:	06/20/03
Date Completed:	09/30/03
Priority Level:	Not reported
Operable Unit:	NORTH HOLLYWOOD
Primary Responsibility:	EPA Fund-Financed
Planning Status:	Primary
Urgency Indicator:	Not reported
Action Anomaly:	Not reported

For detailed financial records, contact EDR for a Site Report.:

Action Code:	005
Action:	FIVE-YEAR REVIEW
Date Started:	04/15/04
Date Completed:	09/30/04
Priority Level:	Not reported

SAN FERNANDO VALLEY (AREA 1) (Continued) **1000709322**

Operable Unit: BURBANK
Primary Responsibility: EPA Fund-Financed
Planning Status: Not reported
Urgency Indicator: Not reported
Action Anomaly: Not reported

For detailed financial records, contact EDR for a Site Report.:

Action Code: 004
Action: UNILATERAL ADMIN ORDER
Date Started: / /
Date Completed: 03/29/07
Priority Level: Not reported
Operable Unit: NORTH HOLLYWOOD
Primary Responsibility: Federal Enforcement
Planning Status: Not reported
Urgency Indicator: Not reported
Action Anomaly: Not reported

For detailed financial records, contact EDR for a Site Report.:

Action Code: 001
Action: Notice of Intent by All Parties
Date Started: / /
Date Completed: 03/29/07
Priority Level: Not reported
Operable Unit: NORTH HOLLYWOOD
Primary Responsibility: Not reported
Planning Status: Not reported
Urgency Indicator: Not reported
Action Anomaly: Not reported

For detailed financial records, contact EDR for a Site Report.:

Action Code: 003
Action: ADMINISTRATIVE ORDER ON CONSENT
Date Started: / /
Date Completed: 09/16/08
Priority Level: Not reported
Operable Unit: NORTH HOLLYWOOD
Primary Responsibility: Federal Enforcement
Planning Status: Not reported
Urgency Indicator: Not reported
Action Anomaly: Not reported

For detailed financial records, contact EDR for a Site Report.:

Action Code: 001
Action: NEGOTIATION (GENERIC)
Date Started: / /
Date Completed: 09/16/08
Priority Level: Not reported
Operable Unit: NORTH HOLLYWOOD
Primary Responsibility: Federal Enforcement
Planning Status: Not reported
Urgency Indicator: Not reported

SAN FERNANDO VALLEY (AREA 1) (Continued) **1000709322**

Action Anomaly: Not reported

For detailed financial records, contact EDR for a Site Report.:

Action Code: 005
Action: UNILATERAL ADMIN ORDER
Date Started: / /
Date Completed: 09/18/08
Priority Level: Not reported
Operable Unit: NORTH HOLLYWOOD
Primary Responsibility: Federal Enforcement
Planning Status: Not reported
Urgency Indicator: Not reported
Action Anomaly: Not reported

For detailed financial records, contact EDR for a Site Report.:

Action Code: 004
Action: FIVE-YEAR REVIEW
Date Started: 04/24/08
Date Completed: 09/30/08
Priority Level: Not reported
Operable Unit: SITEWIDE
Primary Responsibility: EPA Fund-Financed
Planning Status: Not reported
Urgency Indicator: Not reported
Action Anomaly: Not reported

For detailed financial records, contact EDR for a Site Report.:

Action Code: 001
Action: FEASIBILITY STUDY
Date Started: 01/23/06
Date Completed: 09/30/09
Priority Level: Not reported
Operable Unit: NORTH HOLLYWOOD 2ND REMEDY
Primary Responsibility: EPA Fund-Financed
Planning Status: Primary
Urgency Indicator: Not reported
Action Anomaly: Not reported

For detailed financial records, contact EDR for a Site Report.:

Action Code: 004
Action: RECORD OF DECISION
Date Started: / /
Date Completed: 09/30/09
Priority Level: Not reported
Operable Unit: NORTH HOLLYWOOD 2ND REMEDY
Primary Responsibility: EPA Fund-Financed
Planning Status: Not reported
Urgency Indicator: Not reported
Action Anomaly: Not reported

For detailed financial records, contact EDR for a Site Report.:

Action Code: 004
Action: ADMINISTRATIVE ORDER ON CONSENT

SAN FERNANDO VALLEY (AREA 1) (Continued) **1000709322**

Date Started:	/ /
Date Completed:	12/29/09
Priority Level:	Not reported
Operable Unit:	NORTH HOLLYWOOD 2ND REMEDY
Primary Responsibility:	Federal Enforcement
Planning Status:	Not reported
Urgency Indicator:	Not reported
Action Anomaly:	Not reported

For detailed financial records, contact EDR for a Site Report.:

Action Code:	001
Action:	CLAIM IN BANKRUPTCY PROCEEDING
Date Started:	07/02/09
Date Completed:	04/23/10
Priority Level:	Not reported
Operable Unit:	BURBANK
Primary Responsibility:	Federal Enforcement
Planning Status:	Not reported
Urgency Indicator:	Not reported
Action Anomaly:	Not reported

For detailed financial records, contact EDR for a Site Report.:

Action Code:	004
Action:	Special Notice Issued
Date Started:	/ /
Date Completed:	07/01/10
Priority Level:	Not reported
Operable Unit:	NORTH HOLLYWOOD 2ND REMEDY
Primary Responsibility:	Federal Enforcement
Planning Status:	Not reported
Urgency Indicator:	Not reported
Action Anomaly:	Not reported

For detailed financial records, contact EDR for a Site Report.:

Action Code:	004
Action:	REMEDIAL DESIGN/REMEDIAL ACTION NEGOTIATIONS
Date Started:	07/01/10
Date Completed:	02/14/11
Priority Level:	Not reported
Operable Unit:	NORTH HOLLYWOOD 2ND REMEDY
Primary Responsibility:	Federal Enforcement
Planning Status:	Not reported
Urgency Indicator:	Not reported
Action Anomaly:	Not reported

For detailed financial records, contact EDR for a Site Report.:

Action Code:	005
Action:	ADMINISTRATIVE ORDER ON CONSENT
Date Started:	/ /
Date Completed:	02/14/11
Priority Level:	Not reported
Operable Unit:	NORTH HOLLYWOOD 2ND REMEDY

SAN FERNANDO VALLEY (AREA 1) (Continued) **1000709322**

Primary Responsibility: Federal Enforcement
Planning Status: Not reported
Urgency Indicator: Not reported
Action Anomaly: Not reported

For detailed financial records, contact EDR for a Site Report.:

Action Code: 006
Action: ADMINISTRATIVE ORDER ON CONSENT
Date Started: / /
Date Completed: 11/16/11
Priority Level: Not reported
Operable Unit: NORTH HOLLYWOOD
Primary Responsibility: Federal Enforcement
Planning Status: Not reported
Urgency Indicator: Not reported
Action Anomaly: Not reported

For detailed financial records, contact EDR for a Site Report.:

Action Code: 002
Action: NEGOTIATION (GENERIC)
Date Started: / /
Date Completed: 11/16/11
Priority Level: Not reported
Operable Unit: NORTH HOLLYWOOD
Primary Responsibility: Federal Enforcement
Planning Status: Not reported
Urgency Indicator: Not reported
Action Anomaly: Not reported

For detailed financial records, contact EDR for a Site Report.:

Action Code: 007
Action: ADMINISTRATIVE ORDER ON CONSENT
Date Started: / /
Date Completed: 12/06/11
Priority Level: Not reported
Operable Unit: NORTH HOLLYWOOD
Primary Responsibility: Federal Enforcement
Planning Status: Not reported
Urgency Indicator: Not reported
Action Anomaly: Not reported

For detailed financial records, contact EDR for a Site Report.:

Action Code: 003
Action: NEGOTIATION (GENERIC)
Date Started: / /
Date Completed: 12/06/11
Priority Level: Not reported
Operable Unit: NORTH HOLLYWOOD
Primary Responsibility: Federal Enforcement
Planning Status: Not reported
Urgency Indicator: Not reported

SAN FERNANDO VALLEY (AREA 1) (Continued) **1000709322**

Action Anomaly: Not reported

For detailed financial records, contact EDR for a Site Report.:

Action Code: 005
Action: NATIONAL PRIORITIES LIST RESPONSIBLE PARTY SEARCH
Date Started: 09/08/04
Date Completed: 04/26/12
Priority Level: Not reported
Operable Unit: NORTH HOLLYWOOD
Primary Responsibility: Federal Enforcement
Planning Status: Not reported
Urgency Indicator: Not reported
Action Anomaly: Other Completion Anomaly

For detailed financial records, contact EDR for a Site Report.:

Action Code: 008
Action: ADMINISTRATIVE ORDER ON CONSENT
Date Started: / /
Date Completed: 03/01/13
Priority Level: Not reported
Operable Unit: NORTH HOLLYWOOD 2ND REMEDY
Primary Responsibility: Federal Enforcement
Planning Status: Not reported
Urgency Indicator: Not reported
Action Anomaly: Not reported

For detailed financial records, contact EDR for a Site Report.:

Action Code: 009
Action: ADMINISTRATIVE ORDER ON CONSENT
Date Started: / /
Date Completed: 08/06/13
Priority Level: Not reported
Operable Unit: NORTH HOLLYWOOD 2ND REMEDY
Primary Responsibility: Federal Enforcement
Planning Status: Not reported
Urgency Indicator: Not reported
Action Anomaly: Not reported

For detailed financial records, contact EDR for a Site Report.:

Action Code: 002
Action: COMBINED REMEDIAL INVESTIGATION/FEASIBILITY STUDY
Date Started: 08/16/85
Date Completed: / /
Priority Level: Not reported
Operable Unit: BASINWIDE
Primary Responsibility: EPA Fund-Financed
Planning Status: Primary
Urgency Indicator: Not reported
Action Anomaly: Not reported

For detailed financial records, contact EDR for a Site Report.:

Action Code: 001
Action: TECHNICAL ASSISTANCE

SAN FERNANDO VALLEY (AREA 1) (Continued) **1000709322**

Date Started:	09/30/85
Date Completed:	/ /
Priority Level:	Not reported
Operable Unit:	BASINWIDE
Primary Responsibility:	EPA Fund-Financed
Planning Status:	Primary
Urgency Indicator:	Not reported
Action Anomaly:	Not reported

For detailed financial records, contact EDR for a Site Report.:

Action Code:	002
Action:	POTENTIALLY RESPONSIBLE PARTY REMEDIAL ACTION
Date Started:	11/22/93
Date Completed:	/ /
Priority Level:	Not reported
Operable Unit:	BURBANK
Primary Responsibility:	Responsible Party
Planning Status:	Primary
Urgency Indicator:	Not reported
Action Anomaly:	Phased Completion

For detailed financial records, contact EDR for a Site Report.:

Action Code:	001
Action:	POTENTIALLY RESPONSIBLE PARTY REMEDIAL ACTION
Date Started:	11/22/93
Date Completed:	/ /
Priority Level:	Not reported
Operable Unit:	BURBANK
Primary Responsibility:	Responsible Party
Planning Status:	Primary
Urgency Indicator:	Not reported
Action Anomaly:	Phased Completion

For detailed financial records, contact EDR for a Site Report.:

Action Code:	003
Action:	POTENTIALLY RESPONSIBLE PARTY REMEDIAL ACTION
Date Started:	09/30/97
Date Completed:	/ /
Priority Level:	Not reported
Operable Unit:	BURBANK
Primary Responsibility:	Responsible Party
Planning Status:	Primary
Urgency Indicator:	Long Term Action
Action Anomaly:	Phased Start

For detailed financial records, contact EDR for a Site Report.:

Action Code:	001
Action:	OPERATIONS AND MAINTENANCE
Date Started:	12/01/99
Date Completed:	/ /
Priority Level:	Not reported
Operable Unit:	NORTH HOLLYWOOD
Primary Responsibility:	Responsible Party

SAN FERNANDO VALLEY (AREA 1) (Continued) **1000709322**

Planning Status: Not reported
Urgency Indicator: Not reported
Action Anomaly: Not reported

For detailed financial records, contact EDR for a Site Report.:

Action Code: 006
Action: POTENTIALLY RESPONSIBLE PARTY REMEDIAL DESIGN
Date Started: 02/14/11
Date Completed: / /
Priority Level: Not reported
Operable Unit: NORTH HOLLYWOOD 2ND REMEDY
Primary Responsibility: Responsible Party
Planning Status: Primary
Urgency Indicator: Not reported
Action Anomaly: Not reported

For detailed financial records, contact EDR for a Site Report.:

Action Code: 002
Action: REMEDIAL DESIGN
Date Started: 03/01/13
Date Completed: / /
Priority Level: Not reported
Operable Unit: NORTH HOLLYWOOD 2ND REMEDY
Primary Responsibility: EPA Fund-Financed
Planning Status: Not reported
Urgency Indicator: Not reported
Action Anomaly: Not reported

For detailed financial records, contact EDR for a Site Report.:

Federal Register Details:
Fed Register Date: 06/10/86
Fed Register Volume: 51
Page Number: 21054

Fed Register Date: 10/15/84
Fed Register Volume: 49
Page Number: 40320

Click this hyperlink while viewing on your computer to access
3257 additional US CERCLIS Financial: record(s) in the EDR Site Report.

US ENG CONTROLS:
EPA ID: CAD980894893
Site ID: 0902251
Name: SAN FERNANDO VALLEY (AREA 1)
Address: NORTH HOLLYWOOD WELLFIELD AREA
NORTH HOLLYWOOD, CA 91601
EPA Region: 09
County: LOS ANGELES
Event Code: Not reported
Actual Date: 09/30/2009

Action ID: 001
Action Name: Explanation Of Significant Differences

SAN FERNANDO VALLEY (AREA 1) (Continued) **1000709322**

Action Completion date: 11/12/1990
Operable Unit: 03
Contaminated Media : Groundwater
Engineering Control: Reinjection

Action ID: 001
Action Name: Explanation Of Significant Differences
Action Completion date: 11/12/1990
Operable Unit: 03
Contaminated Media : Groundwater
Engineering Control: Treatment, (N.O.S.)

Action ID: 002
Action Name: Explanation Of Significant Differences
Action Completion date: 02/12/1997
Operable Unit: 03
Contaminated Media : Groundwater
Engineering Control: Non-fundamental change (ESD)

Action ID: 002
Action Name: RECORD OF DECISION
Action Completion date: 06/30/1989
Operable Unit: 03
Contaminated Media : Groundwater
Engineering Control: Air Stripping

Action ID: 002
Action Name: RECORD OF DECISION
Action Completion date: 06/30/1989
Operable Unit: 03
Contaminated Media : Groundwater
Engineering Control: Extraction

Action ID: 002
Action Name: RECORD OF DECISION
Action Completion date: 06/30/1989
Operable Unit: 03
Contaminated Media : Groundwater
Engineering Control: Reuse as Drinking Water

Action ID: 002
Action Name: RECORD OF DECISION
Action Completion date: 06/30/1989
Operable Unit: 03
Contaminated Media : Groundwater
Engineering Control: Treatment, (N.O.S.)

Action ID: 003
Action Name: RECORD OF DECISION
Action Completion date: 09/24/1987
Operable Unit: 02
Contaminated Media : Groundwater
Engineering Control: Aeration

Action ID: 003
Action Name: RECORD OF DECISION
Action Completion date: 09/24/1987

SAN FERNANDO VALLEY (AREA 1) (Continued) **1000709322**

Operable Unit: 02
Contaminated Media : Groundwater
Engineering Control: Carbon Adsorption

Action ID: 003
Action Name: RECORD OF DECISION
Action Completion date: 09/24/1987
Operable Unit: 02
Contaminated Media : Groundwater
Engineering Control: Containment, (N.O.S.)

Action ID: 003
Action Name: RECORD OF DECISION
Action Completion date: 09/24/1987
Operable Unit: 02
Contaminated Media : Groundwater
Engineering Control: Discharge

Action ID: 003
Action Name: RECORD OF DECISION
Action Completion date: 09/24/1987
Operable Unit: 02
Contaminated Media : Groundwater
Engineering Control: Extraction

Action ID: 004
Action Name: RECORD OF DECISION
Action Completion date: 09/30/2009
Operable Unit: 04
Contaminated Media : Groundwater
Engineering Control: Air Stripping

Action ID: 004
Action Name: RECORD OF DECISION
Action Completion date: 09/30/2009
Operable Unit: 04
Contaminated Media : Groundwater
Engineering Control: Extraction

Action ID: 004
Action Name: RECORD OF DECISION
Action Completion date: 09/30/2009
Operable Unit: 04
Contaminated Media : Groundwater
Engineering Control: Filtration

Action ID: 004
Action Name: RECORD OF DECISION
Action Completion date: 09/30/2009
Operable Unit: 04
Contaminated Media : Groundwater
Engineering Control: Ion Exchange

Action ID: 004
Action Name: RECORD OF DECISION
Action Completion date: 09/30/2009
Operable Unit: 04

SAN FERNANDO VALLEY (AREA 1) (Continued) **1000709322**

Contaminated Media : Groundwater
Engineering Control: Liquid Phase Carbon Adsorption

Action ID: 004
Action Name: RECORD OF DECISION
Action Completion date: 09/30/2009
Operable Unit: 04
Contaminated Media : Groundwater
Engineering Control: Monitoring

Action ID: 004
Action Name: RECORD OF DECISION
Action Completion date: 09/30/2009
Operable Unit: 04
Contaminated Media : Groundwater
Engineering Control: Well Head Treatment

US INST CONTROL:
EPA ID: CAD980894893
Site ID: 0902251
Name: SAN FERNANDO VALLEY (AREA 1)
Action Name: RECORD OF DECISION
Address: NORTH HOLLYWOOD WELLFIELD AREA
NORTH HOLLYWOOD, CA 91601
EPA Region: 09
County: LOS ANGELES
Event Code: Not reported
Inst. Control: Groundwater use/well drilling regulation
Actual Date: 09/30/2009
Complet. Date: 09/30/2009
Operable Unit: 04
Contaminated Media : Groundwater

CONSENT:
EPA ID: CAD980894893
Site ID: Not reported
Case Title: U.S. V. ALLIED-SIGNAL, ET AL.
Court Num: 93-6490
District: California, Cent
Entered Date: 19970514
Full-text of the consent decree for this site issued by the United States District Court is available from EDR. Contact your EDR Account Executive.

ROD:
Full-text of USEPA Record of Decision(s) is available from EDR.

ICIS:
Enforcement Action ID: 09-2013-2511
FRS ID: 110009267961
Program ID: CERCLIS CAD980894893
Action Name: NHOU AOC FOR RECOVERY OF RESPONSE COSTS
Full Address: NORTH HOLLYWOOD WELLFIELD AREA NORTH HOLLYWOOD WELLFIELD AREA NORTH HOLLYWOOD CA 91601

SAN FERNANDO VALLEY (AREA 1) (Continued) **1000709322**

State: California
Facility Name: SAN FERNANDO VALLEY (AREA 1)
Facility Address: NORTH HOLLYWOOD WELLFIELD AREA
NORTH HOLLYWOOD, CA 91601
Enforcement Action Type: CERCLA 107L Filing Of Lien
Facility County: LOS ANGELES
EPA Region #: 9

Enforcement Action ID: 09-2013-2511
FRS ID: 110009267961
Program ID: DTSC-ENVIROSTOR 19990011
Action Name: NHOU AOC FOR RECOVERY OF RESPONSE COSTS
Full Address: NORTH HOLLYWOOD WELLFIELD AREA NORTH HOLLYWOOD WELLFIELD AREA NORTH HOLLYWOOD CA 91601
State: California
Facility Name: SAN FERNANDO VALLEY (AREA 1)
Facility Address: NORTH HOLLYWOOD WELLFIELD AREA
NORTH HOLLYWOOD, CA 91601
Enforcement Action Type: CERCLA 107L Filing Of Lien
Facility County: LOS ANGELES
EPA Region #: 9

Enforcement Action ID: 09-2013-2511
FRS ID: 110009267961
Program ID: FRS 110009267961
Action Name: NHOU AOC FOR RECOVERY OF RESPONSE COSTS
Full Address: NORTH HOLLYWOOD WELLFIELD AREA NORTH HOLLYWOOD WELLFIELD AREA NORTH HOLLYWOOD CA 91601
State: California
Facility Name: SAN FERNANDO VALLEY (AREA 1)
Facility Address: NORTH HOLLYWOOD WELLFIELD AREA
NORTH HOLLYWOOD, CA 91601
Enforcement Action Type: CERCLA 107L Filing Of Lien
Facility County: LOS ANGELES
EPA Region #: 9

Enforcement Action ID: 09-2013-2511
FRS ID: 110009267961
Program ID: FRS 110009267961
Action Name: NHOU AOC FOR RECOVERY OF RESPONSE COSTS
Full Address: NORTH HOLLYWOOD WELLFIELD AREA NORTH HOLLYWOOD WELLFIELD AREA NORTH HOLLYWOOD CA 91601
State: California
Facility Name: SAN FERNANDO VALLEY (AREA 1)
Facility Address: NORTH HOLLYWOOD WELLFIELD AREA
NORTH HOLLYWOOD, CA 91601
Enforcement Action Type: CERCLA 122h Agrmt For Cost Recovery
Facility County: LOS ANGELES
EPA Region #: 9

Enforcement Action ID: 09-2013-2511
FRS ID: 110009267961
Program ID: DTSC-ENVIROSTOR 19990011
Action Name: NHOU AOC FOR RECOVERY OF RESPONSE COSTS
Full Address: NORTH HOLLYWOOD WELLFIELD AREA NORTH HOLLYWOOD WELLFIELD AREA NORTH HOLLYWOOD CA 91601
State: California

SAN FERNANDO VALLEY (AREA 1) (Continued) **1000709322**

Facility Name: SAN FERNANDO VALLEY (AREA 1)
Facility Address: NORTH HOLLYWOOD WELLFIELD AREA
NORTH HOLLYWOOD, CA 91601
Enforcement Action Type: CERCLA 122h Agrmt For Cost Recovery
Facility County: LOS ANGELES
EPA Region #: 9

Enforcement Action ID: 09-2013-2511
FRS ID: 110009267961
Program ID: CERCLIS CAD980894893
Action Name: NHOU AOC FOR RECOVERY OF RESPONSE COSTS
Full Address: NORTH HOLLYWOOD WELLFIELD AREA NORTH HOLLYWOOD WELLFIELD AREA NORTH HOLLYWOOD CA 91601
State: California
Facility Name: SAN FERNANDO VALLEY (AREA 1)
Facility Address: NORTH HOLLYWOOD WELLFIELD AREA
NORTH HOLLYWOOD, CA 91601
Enforcement Action Type: CERCLA 122h Agrmt For Cost Recovery
Facility County: LOS ANGELES
EPA Region #: 9

Enforcement Action ID: 09-2013-2508
FRS ID: 110009267961
Program ID: DTSC-ENVIROSTOR 19990011
Action Name: NHOU AOC FOR HONEYWELL NHE-2 RD
Full Address: NORTH HOLLYWOOD WELLFIELD AREA NORTH HOLLYWOOD WELLFIELD AREA NORTH HOLLYWOOD CA 91601
State: California
Facility Name: SAN FERNANDO VALLEY (AREA 1)
Facility Address: NORTH HOLLYWOOD WELLFIELD AREA
NORTH HOLLYWOOD, CA 91601
Enforcement Action Type: CERCLA 122h Agrmt For Cost Recovery
Facility County: LOS ANGELES
EPA Region #: 9

Enforcement Action ID: 09-2013-2508
FRS ID: 110009267961
Program ID: DTSC-ENVIROSTOR 19990011
Action Name: NHOU AOC FOR HONEYWELL NHE-2 RD
Full Address: NORTH HOLLYWOOD WELLFIELD AREA NORTH HOLLYWOOD WELLFIELD AREA NORTH HOLLYWOOD CA 91601
State: California
Facility Name: SAN FERNANDO VALLEY (AREA 1)
Facility Address: NORTH HOLLYWOOD WELLFIELD AREA
NORTH HOLLYWOOD, CA 91601
Enforcement Action Type: CERCLA 107L Filing Of Lien
Facility County: LOS ANGELES
EPA Region #: 9

Enforcement Action ID: 09-2013-2508
FRS ID: 110009267961
Program ID: CERCLIS CAD980894893
Action Name: NHOU AOC FOR HONEYWELL NHE-2 RD
Full Address: NORTH HOLLYWOOD WELLFIELD AREA NORTH HOLLYWOOD WELLFIELD AREA NORTH HOLLYWOOD CA 91601
State: California
Facility Name: SAN FERNANDO VALLEY (AREA 1)

SAN FERNANDO VALLEY (AREA 1) (Continued) **1000709322**

Facility Address: NORTH HOLLYWOOD WELLFIELD AREA
NORTH HOLLYWOOD, CA 91601
Enforcement Action Type: CERCLA 107L Filing Of Lien
Facility County: LOS ANGELES
EPA Region #: 9

Enforcement Action ID: 09-2013-2508
FRS ID: 110009267961
Program ID: FRS 110009267961
Action Name: NHOU AOC FOR HONEYWELL NHE-2 RD
Full Address: NORTH HOLLYWOOD WELLFIELD AREA NORTH HOLLYWOOD WELLFIELD AREA NORTH HOLLYWOOD CA 91601
State: California
Facility Name: SAN FERNANDO VALLEY (AREA 1)
Facility Address: NORTH HOLLYWOOD WELLFIELD AREA
NORTH HOLLYWOOD, CA 91601
Enforcement Action Type: CERCLA 122h Agrmt For Cost Recovery
Facility County: LOS ANGELES
EPA Region #: 9

Enforcement Action ID: 09-2013-2508
FRS ID: 110009267961
Program ID: FRS 110009267961
Action Name: NHOU AOC FOR HONEYWELL NHE-2 RD
Full Address: NORTH HOLLYWOOD WELLFIELD AREA NORTH HOLLYWOOD WELLFIELD AREA NORTH HOLLYWOOD CA 91601
State: California
Facility Name: SAN FERNANDO VALLEY (AREA 1)
Facility Address: NORTH HOLLYWOOD WELLFIELD AREA
NORTH HOLLYWOOD, CA 91601
Enforcement Action Type: CERCLA 107L Filing Of Lien
Facility County: LOS ANGELES
EPA Region #: 9

Enforcement Action ID: 09-2013-2508
FRS ID: 110009267961
Program ID: CERCLIS CAD980894893
Action Name: NHOU AOC FOR HONEYWELL NHE-2 RD
Full Address: NORTH HOLLYWOOD WELLFIELD AREA NORTH HOLLYWOOD WELLFIELD AREA NORTH HOLLYWOOD CA 91601
State: California
Facility Name: SAN FERNANDO VALLEY (AREA 1)
Facility Address: NORTH HOLLYWOOD WELLFIELD AREA
NORTH HOLLYWOOD, CA 91601
Enforcement Action Type: CERCLA 122h Agrmt For Cost Recovery
Facility County: LOS ANGELES
EPA Region #: 9

Enforcement Action ID: 09-2013-2508
FRS ID: 110009267961
Program ID: CERCLIS CAD980894893
Action Name: NHOU AOC FOR HONEYWELL NHE-2 RD
Full Address: NORTH HOLLYWOOD WELLFIELD AREA NORTH HOLLYWOOD WELLFIELD AREA NORTH HOLLYWOOD CA 91601
State: California
Facility Name: SAN FERNANDO VALLEY (AREA 1)
Facility Address: NORTH HOLLYWOOD WELLFIELD AREA

SAN FERNANDO VALLEY (AREA 1) (Continued) **1000709322**

NORTH HOLLYWOOD, CA 91601
Enforcement Action Type: CERCLA 104E5A AO For Access And/Or Info
Facility County: LOS ANGELES
EPA Region #: 9

Enforcement Action ID: 09-2013-2508
FRS ID: 110009267961
Program ID: DTSC-ENVIROSTOR 19990011
Action Name: NHOU AOC FOR HONEYWELL NHE-2 RD
Full Address: NORTH HOLLYWOOD WELLFIELD AREA NORTH HOLLYWOOD WELLFIELD AREA NORTH HOLLYWOOD CA 91601
State: California
Facility Name: SAN FERNANDO VALLEY (AREA 1)
Facility Address: NORTH HOLLYWOOD WELLFIELD AREA
NORTH HOLLYWOOD, CA 91601
Enforcement Action Type: CERCLA 104E5A AO For Access And/Or Info
Facility County: LOS ANGELES
EPA Region #: 9

Enforcement Action ID: 09-2013-2508
FRS ID: 110009267961
Program ID: FRS 110009267961
Action Name: NHOU AOC FOR HONEYWELL NHE-2 RD
Full Address: NORTH HOLLYWOOD WELLFIELD AREA NORTH HOLLYWOOD WELLFIELD AREA NORTH HOLLYWOOD CA 91601
State: California
Facility Name: SAN FERNANDO VALLEY (AREA 1)
Facility Address: NORTH HOLLYWOOD WELLFIELD AREA
NORTH HOLLYWOOD, CA 91601
Enforcement Action Type: CERCLA 104E5A AO For Access And/Or Info
Facility County: LOS ANGELES
EPA Region #: 9

Enforcement Action ID: 09-2013-2508
FRS ID: 110009267961
Program ID: CERCLIS CAD980894893
Action Name: NHOU AOC FOR HONEYWELL NHE-2 RD
Full Address: NORTH HOLLYWOOD WELLFIELD AREA NORTH HOLLYWOOD WELLFIELD AREA NORTH HOLLYWOOD CA 91601
State: California
Facility Name: SAN FERNANDO VALLEY (AREA 1)
Facility Address: NORTH HOLLYWOOD WELLFIELD AREA
NORTH HOLLYWOOD, CA 91601
Enforcement Action Type: CERCLA 106 AO For Resp Action/Imm Haz
Facility County: LOS ANGELES
EPA Region #: 9

Enforcement Action ID: 09-2013-2508
FRS ID: 110009267961
Program ID: DTSC-ENVIROSTOR 19990011
Action Name: NHOU AOC FOR HONEYWELL NHE-2 RD
Full Address: NORTH HOLLYWOOD WELLFIELD AREA NORTH HOLLYWOOD WELLFIELD AREA NORTH HOLLYWOOD CA 91601
State: California
Facility Name: SAN FERNANDO VALLEY (AREA 1)
Facility Address: NORTH HOLLYWOOD WELLFIELD AREA
NORTH HOLLYWOOD, CA 91601

SAN FERNANDO VALLEY (AREA 1) (Continued) **1000709322**

Enforcement Action Type: CERCLA 106 AO For Resp Action/Imm Haz
Facility County: LOS ANGELES
EPA Region #: 9

Enforcement Action ID: 09-2013-2508
FRS ID: 110009267961
Program ID: FRS 110009267961
Action Name: NHOU AOC FOR HONEYWELL NHE-2 RD
Full Address: NORTH HOLLYWOOD WELLFIELD AREA NORTH HOLLYWOOD WELLFIELD AREA NORTH HOLLYWOOD CA 91601
State: California
Facility Name: SAN FERNANDO VALLEY (AREA 1)
Facility Address: NORTH HOLLYWOOD WELLFIELD AREA
NORTH HOLLYWOOD, CA 91601
Enforcement Action Type: CERCLA 106 AO For Resp Action/Imm Haz
Facility County: LOS ANGELES
EPA Region #: 9

Enforcement Action ID: 09-2012-2501
FRS ID: 110009267961
Program ID: CERCLIS CAD980894893
Action Name: NHOU AOC WITH WASTE MGMT FOR COST RECOVERY AND CIVIL PENALTY
Full Address: NORTH HOLLYWOOD WELLFIELD AREA NORTH HOLLYWOOD WELLFIELD AREA NORTH HOLLYWOOD CA 91601
State: California
Facility Name: SAN FERNANDO VALLEY (AREA 1)
Facility Address: NORTH HOLLYWOOD WELLFIELD AREA
NORTH HOLLYWOOD, CA 91601
Enforcement Action Type: CERCLA 122h Agrmt For Cost Recovery
Facility County: LOS ANGELES
EPA Region #: 9

Enforcement Action ID: 09-2012-2501
FRS ID: 110009267961
Program ID: DTSC-ENVIROSTOR 19990011
Action Name: NHOU AOC WITH WASTE MGMT FOR COST RECOVERY AND CIVIL PENALTY
Full Address: NORTH HOLLYWOOD WELLFIELD AREA NORTH HOLLYWOOD WELLFIELD AREA NORTH HOLLYWOOD CA 91601
State: California
Facility Name: SAN FERNANDO VALLEY (AREA 1)
Facility Address: NORTH HOLLYWOOD WELLFIELD AREA
NORTH HOLLYWOOD, CA 91601
Enforcement Action Type: CERCLA 122h Agrmt For Cost Recovery
Facility County: LOS ANGELES
EPA Region #: 9

Enforcement Action ID: 09-2012-2501
FRS ID: 110009267961
Program ID: FRS 110009267961
Action Name: NHOU AOC WITH WASTE MGMT FOR COST RECOVERY AND CIVIL PENALTY
Full Address: NORTH HOLLYWOOD WELLFIELD AREA NORTH HOLLYWOOD WELLFIELD AREA NORTH HOLLYWOOD CA 91601
State: California
Facility Name: SAN FERNANDO VALLEY (AREA 1)
Facility Address: NORTH HOLLYWOOD WELLFIELD AREA
NORTH HOLLYWOOD, CA 91601
Enforcement Action Type: CERCLA 122h Agrmt For Cost Recovery

SAN FERNANDO VALLEY (AREA 1) (Continued) **1000709322**

Facility County: LOS ANGELES
EPA Region #: 9

Enforcement Action ID: 09-2012-2500
FRS ID: 110009267961
Program ID: DTSC-ENVIROSTOR 19990011
Action Name: NHOU AOC WITH PICK-YOUR-PART FOR RECOVERY OF RESPONSE COSTS AND PAYMENT OF CIVIL PENALTY
Full Address: NORTH HOLLYWOOD WELLFIELD AREA NORTH HOLLYWOOD WELLFIELD AREA NORTH HOLLYWOOD CA 91601
State: California
Facility Name: SAN FERNANDO VALLEY (AREA 1)
Facility Address: NORTH HOLLYWOOD WELLFIELD AREA
NORTH HOLLYWOOD, CA 91601
Enforcement Action Type: CERCLA 106 AO For Resp Action/Imm Haz
Facility County: LOS ANGELES
EPA Region #: 9

Enforcement Action ID: 09-2012-2500
FRS ID: 110009267961
Program ID: FRS 110009267961
Action Name: NHOU AOC WITH PICK-YOUR-PART FOR RECOVERY OF RESPONSE COSTS AND PAYMENT OF CIVIL PENALTY
Full Address: NORTH HOLLYWOOD WELLFIELD AREA NORTH HOLLYWOOD WELLFIELD AREA NORTH HOLLYWOOD CA 91601
State: California
Facility Name: SAN FERNANDO VALLEY (AREA 1)
Facility Address: NORTH HOLLYWOOD WELLFIELD AREA
NORTH HOLLYWOOD, CA 91601
Enforcement Action Type: CERCLA 106 AO For Resp Action/Imm Haz
Facility County: LOS ANGELES
EPA Region #: 9

Enforcement Action ID: 09-2012-2500
FRS ID: 110009267961
Program ID: CERCLIS CAD980894893
Action Name: NHOU AOC WITH PICK-YOUR-PART FOR RECOVERY OF RESPONSE COSTS AND PAYMENT OF CIVIL PENALTY
Full Address: NORTH HOLLYWOOD WELLFIELD AREA NORTH HOLLYWOOD WELLFIELD AREA NORTH HOLLYWOOD CA 91601
State: California
Facility Name: SAN FERNANDO VALLEY (AREA 1)
Facility Address: NORTH HOLLYWOOD WELLFIELD AREA
NORTH HOLLYWOOD, CA 91601
Enforcement Action Type: CERCLA 106 AO For Resp Action/Imm Haz
Facility County: LOS ANGELES
EPA Region #: 9

Enforcement Action ID: 09-2012-2500
FRS ID: 110009267961
Program ID: CERCLIS CAD980894893
Action Name: NHOU AOC WITH PICK-YOUR-PART FOR RECOVERY OF RESPONSE COSTS AND PAYMENT OF CIVIL PENALTY
Full Address: NORTH HOLLYWOOD WELLFIELD AREA NORTH HOLLYWOOD WELLFIELD AREA NORTH HOLLYWOOD CA 91601
State: California
Facility Name: SAN FERNANDO VALLEY (AREA 1)

SAN FERNANDO VALLEY (AREA 1) (Continued) **1000709322**

Facility Address: NORTH HOLLYWOOD WELLFIELD AREA
NORTH HOLLYWOOD, CA 91601
Enforcement Action Type: CERCLA 122h Agrmt For Cost Recovery
Facility County: LOS ANGELES
EPA Region #: 9

Enforcement Action ID: 09-2012-2500
FRS ID: 110009267961
Program ID: DTSC-ENVIROSTOR 19990011
Action Name: NHOU AOC WITH PICK-YOUR-PART FOR RECOVERY OF RESPONSE COSTS AND PAYMENT OF CIVIL PENALTY
Full Address: NORTH HOLLYWOOD WELLFIELD AREA NORTH HOLLYWOOD WELLFIELD AREA NORTH HOLLYWOOD CA 91601
State: California
Facility Name: SAN FERNANDO VALLEY (AREA 1)
Facility Address: NORTH HOLLYWOOD WELLFIELD AREA
NORTH HOLLYWOOD, CA 91601
Enforcement Action Type: CERCLA 122h Agrmt For Cost Recovery
Facility County: LOS ANGELES
EPA Region #: 9

Enforcement Action ID: 09-2012-2500
FRS ID: 110009267961
Program ID: FRS 110009267961
Action Name: NHOU AOC WITH PICK-YOUR-PART FOR RECOVERY OF RESPONSE COSTS AND PAYMENT OF CIVIL PENALTY
Full Address: NORTH HOLLYWOOD WELLFIELD AREA NORTH HOLLYWOOD WELLFIELD AREA NORTH HOLLYWOOD CA 91601
State: California
Facility Name: SAN FERNANDO VALLEY (AREA 1)
Facility Address: NORTH HOLLYWOOD WELLFIELD AREA
NORTH HOLLYWOOD, CA 91601
Enforcement Action Type: CERCLA 122h Agrmt For Cost Recovery
Facility County: LOS ANGELES
EPA Region #: 9

Enforcement Action ID: 09-2011-2509
FRS ID: 110009267961
Program ID: DTSC-ENVIROSTOR 19990011
Action Name: NORTH HOLLYWOOD OPERABLE UNIT AOC FOR RD
Full Address: NORTH HOLLYWOOD WELLFIELD AREA NORTH HOLLYWOOD WELLFIELD AREA NORTH HOLLYWOOD CA 91601
State: California
Facility Name: SAN FERNANDO VALLEY (AREA 1)
Facility Address: NORTH HOLLYWOOD WELLFIELD AREA
NORTH HOLLYWOOD, CA 91601
Enforcement Action Type: CERCLA 122A/104A Agrmt For RI/FS
Facility County: LOS ANGELES
EPA Region #: 9

Enforcement Action ID: 09-2011-2509
FRS ID: 110009267961
Program ID: FRS 110009267961
Action Name: NORTH HOLLYWOOD OPERABLE UNIT AOC FOR RD
Full Address: NORTH HOLLYWOOD WELLFIELD AREA NORTH HOLLYWOOD WELLFIELD AREA NORTH HOLLYWOOD CA 91601
State: California

SAN FERNANDO VALLEY (AREA 1) (Continued) **1000709322**

Facility Name: SAN FERNANDO VALLEY (AREA 1)
Facility Address: NORTH HOLLYWOOD WELLFIELD AREA
NORTH HOLLYWOOD, CA 91601
Enforcement Action Type: CERCLA 122A/104A Agrmt For RI/FS
Facility County: LOS ANGELES
EPA Region #: 9

Enforcement Action ID: 09-2011-2509
FRS ID: 110009267961
Program ID: CERCLIS CAD980894893
Action Name: NORTH HOLLYWOOD OPERABLE UNIT AOC FOR RD
Full Address: NORTH HOLLYWOOD WELLFIELD AREA NORTH HOLLYWOOD WELLFIELD AREA NORTH HOLLYWOOD CA 91601
State: California
Facility Name: SAN FERNANDO VALLEY (AREA 1)
Facility Address: NORTH HOLLYWOOD WELLFIELD AREA
NORTH HOLLYWOOD, CA 91601
Enforcement Action Type: CERCLA 122A/104A Agrmt For RI/FS
Facility County: LOS ANGELES
EPA Region #: 9

Enforcement Action ID: 09-2011-2500
FRS ID: 110009267961
Program ID: DTSC-ENVIROSTOR 19990011
Action Name: ACCESS ORDER TO LOS ANGELES BYPRODUCTS CO.
Full Address: NORTH HOLLYWOOD WELLFIELD AREA NORTH HOLLYWOOD WELLFIELD AREA NORTH HOLLYWOOD CA 91601
State: California
Facility Name: SAN FERNANDO VALLEY (AREA 1)
Facility Address: NORTH HOLLYWOOD WELLFIELD AREA
NORTH HOLLYWOOD, CA 91601
Enforcement Action Type: CERCLA 104E5A AO For Access And/Or Info
Facility County: LOS ANGELES
EPA Region #: 9

Enforcement Action ID: 09-2011-2500
FRS ID: 110009267961
Program ID: FRS 110009267961
Action Name: ACCESS ORDER TO LOS ANGELES BYPRODUCTS CO.
Full Address: NORTH HOLLYWOOD WELLFIELD AREA NORTH HOLLYWOOD WELLFIELD AREA NORTH HOLLYWOOD CA 91601
State: California
Facility Name: SAN FERNANDO VALLEY (AREA 1)
Facility Address: NORTH HOLLYWOOD WELLFIELD AREA
NORTH HOLLYWOOD, CA 91601
Enforcement Action Type: CERCLA 104E5A AO For Access And/Or Info
Facility County: LOS ANGELES
EPA Region #: 9

Enforcement Action ID: 09-2011-2500
FRS ID: 110009267961
Program ID: CERCLIS CAD980894893
Action Name: ACCESS ORDER TO LOS ANGELES BYPRODUCTS CO.
Full Address: NORTH HOLLYWOOD WELLFIELD AREA NORTH HOLLYWOOD WELLFIELD AREA NORTH HOLLYWOOD CA 91601
State: California
Facility Name: SAN FERNANDO VALLEY (AREA 1)

SAN FERNANDO VALLEY (AREA 1) (Continued) **1000709322**

Facility Address: NORTH HOLLYWOOD WELLFIELD AREA
NORTH HOLLYWOOD, CA 91601
Enforcement Action Type: CERCLA 104E5A AO For Access And/Or Info
Facility County: LOS ANGELES
EPA Region #: 9

Enforcement Action ID: 09-2010-2519
FRS ID: 110009267961
Program ID: FRS 110009267961
Action Name: LYONDELL BANKRUPTCY (NC)
Full Address: NORTH HOLLYWOOD WELLFIELD AREA NORTH HOLLYWOOD WELLFIELD AREA NORTH HOLLYWOOD CA 91601
State: California
Facility Name: SAN FERNANDO VALLEY (AREA 1)
Facility Address: NORTH HOLLYWOOD WELLFIELD AREA
NORTH HOLLYWOOD, CA 91601
Enforcement Action Type: Bankruptcy
Facility County: LOS ANGELES
EPA Region #: 9

Enforcement Action ID: 09-2010-2519
FRS ID: 110009267961
Program ID: DTSC-ENVIROSTOR 19990011
Action Name: LYONDELL BANKRUPTCY (NC)
Full Address: NORTH HOLLYWOOD WELLFIELD AREA NORTH HOLLYWOOD WELLFIELD AREA NORTH HOLLYWOOD CA 91601
State: California
Facility Name: SAN FERNANDO VALLEY (AREA 1)
Facility Address: NORTH HOLLYWOOD WELLFIELD AREA
NORTH HOLLYWOOD, CA 91601
Enforcement Action Type: Bankruptcy
Facility County: LOS ANGELES
EPA Region #: 9

Enforcement Action ID: 09-2010-2519
FRS ID: 110009267961
Program ID: CERCLIS CAD980894893
Action Name: LYONDELL BANKRUPTCY (NC)
Full Address: NORTH HOLLYWOOD WELLFIELD AREA NORTH HOLLYWOOD WELLFIELD AREA NORTH HOLLYWOOD CA 91601
State: California
Facility Name: SAN FERNANDO VALLEY (AREA 1)
Facility Address: NORTH HOLLYWOOD WELLFIELD AREA
NORTH HOLLYWOOD, CA 91601
Enforcement Action Type: Bankruptcy
Facility County: LOS ANGELES
EPA Region #: 9

Enforcement Action ID: 09-2010-2505
FRS ID: 110009267961
Program ID: CERCLIS CAD980894893
Action Name: NORTH HOLLYWOOD AO FOR RI WITH HONEYWELL INTL INC
Full Address: NORTH HOLLYWOOD WELLFIELD AREA NORTH HOLLYWOOD WELLFIELD AREA NORTH HOLLYWOOD CA 91601
State: California
Facility Name: SAN FERNANDO VALLEY (AREA 1)
Facility Address: NORTH HOLLYWOOD WELLFIELD AREA

SAN FERNANDO VALLEY (AREA 1) (Continued) **1000709322**

NORTH HOLLYWOOD, CA 91601
Enforcement Action Type: CERCLA 122A/104A Agrmt For RI/FS
Facility County: LOS ANGELES
EPA Region #: 9

Enforcement Action ID: 09-2010-2505
FRS ID: 110009267961
Program ID: FRS 110009267961
Action Name: NORTH HOLLYWOOD AO FOR RI WITH HONEYWELL INTL INC
Full Address: NORTH HOLLYWOOD WELLFIELD AREA NORTH HOLLYWOOD WELLFIELD AREA NORTH HOLLYWOOD CA 91601
State: California
Facility Name: SAN FERNANDO VALLEY (AREA 1)
Facility Address: NORTH HOLLYWOOD WELLFIELD AREA
NORTH HOLLYWOOD, CA 91601
Enforcement Action Type: CERCLA 122A/104A Agrmt For RI/FS
Facility County: LOS ANGELES
EPA Region #: 9

Enforcement Action ID: 09-2010-2505
FRS ID: 110009267961
Program ID: DTSC-ENVIROSTOR 19990011
Action Name: NORTH HOLLYWOOD AO FOR RI WITH HONEYWELL INTL INC
Full Address: NORTH HOLLYWOOD WELLFIELD AREA NORTH HOLLYWOOD WELLFIELD AREA NORTH HOLLYWOOD CA 91601
State: California
Facility Name: SAN FERNANDO VALLEY (AREA 1)
Facility Address: NORTH HOLLYWOOD WELLFIELD AREA
NORTH HOLLYWOOD, CA 91601
Enforcement Action Type: CERCLA 122A/104A Agrmt For RI/FS
Facility County: LOS ANGELES
EPA Region #: 9

Enforcement Action ID: 09-2008-2527
FRS ID: 110009267961
Program ID: DTSC-ENVIROSTOR 19990011
Action Name: NORTH HOLLYWOOD 106A ORDER FOR GROUNDWATER
Full Address: NORTH HOLLYWOOD WELLFIELD AREA NORTH HOLLYWOOD WELLFIELD AREA NORTH HOLLYWOOD CA 91601
State: California
Facility Name: SAN FERNANDO VALLEY (AREA 1)
Facility Address: NORTH HOLLYWOOD WELLFIELD AREA
NORTH HOLLYWOOD, CA 91601
Enforcement Action Type: CERCLA 106 AO For Resp Action/Imm Haz
Facility County: LOS ANGELES
EPA Region #: 9

Enforcement Action ID: 09-2008-2527
FRS ID: 110009267961
Program ID: CERCLIS CAD980894893
Action Name: NORTH HOLLYWOOD 106A ORDER FOR GROUNDWATER
Full Address: NORTH HOLLYWOOD WELLFIELD AREA NORTH HOLLYWOOD WELLFIELD AREA NORTH HOLLYWOOD CA 91601
State: California
Facility Name: SAN FERNANDO VALLEY (AREA 1)
Facility Address: NORTH HOLLYWOOD WELLFIELD AREA
NORTH HOLLYWOOD, CA 91601

SAN FERNANDO VALLEY (AREA 1) (Continued) **1000709322**

Enforcement Action Type: CERCLA 106 AO For Resp Action/Imm Haz
Facility County: LOS ANGELES
EPA Region #: 9

Enforcement Action ID: 09-2008-2527
FRS ID: 110009267961
Program ID: FRS 110009267961
Action Name: NORTH HOLLYWOOD 106A ORDER FOR GROUNDWATER
Full Address: NORTH HOLLYWOOD WELLFIELD AREA NORTH HOLLYWOOD WELLFIELD AREA NORTH HOLLYWOOD CA 91601
State: California
Facility Name: SAN FERNANDO VALLEY (AREA 1)
Facility Address: NORTH HOLLYWOOD WELLFIELD AREA
NORTH HOLLYWOOD, CA 91601
Enforcement Action Type: CERCLA 106 AO For Resp Action/Imm Haz
Facility County: LOS ANGELES
EPA Region #: 9

Enforcement Action ID: 09-2008-2521
FRS ID: 110009267961
Program ID: FRS 110009267961
Action Name: SAN FERNANDO AREA 1 122H AOC W/ HONEYWELL, LOCKHEED
Full Address: NORTH HOLLYWOOD WELLFIELD AREA NORTH HOLLYWOOD WELLFIELD AREA NORTH HOLLYWOOD CA 91601
State: California
Facility Name: SAN FERNANDO VALLEY (AREA 1)
Facility Address: NORTH HOLLYWOOD WELLFIELD AREA
NORTH HOLLYWOOD, CA 91601
Enforcement Action Type: CERCLA 122h Agrmt For Cost Recovery
Facility County: LOS ANGELES
EPA Region #: 9

Enforcement Action ID: 09-2008-2521
FRS ID: 110009267961
Program ID: DTSC-ENVIROSTOR 19990011
Action Name: SAN FERNANDO AREA 1 122H AOC W/ HONEYWELL, LOCKHEED
Full Address: NORTH HOLLYWOOD WELLFIELD AREA NORTH HOLLYWOOD WELLFIELD AREA NORTH HOLLYWOOD CA 91601
State: California
Facility Name: SAN FERNANDO VALLEY (AREA 1)
Facility Address: NORTH HOLLYWOOD WELLFIELD AREA
NORTH HOLLYWOOD, CA 91601
Enforcement Action Type: CERCLA 122h Agrmt For Cost Recovery
Facility County: LOS ANGELES
EPA Region #: 9

Enforcement Action ID: 09-2008-2521
FRS ID: 110009267961
Program ID: CERCLIS CAD980894893
Action Name: SAN FERNANDO AREA 1 122H AOC W/ HONEYWELL, LOCKHEED
Full Address: NORTH HOLLYWOOD WELLFIELD AREA NORTH HOLLYWOOD WELLFIELD AREA NORTH HOLLYWOOD CA 91601
State: California
Facility Name: SAN FERNANDO VALLEY (AREA 1)
Facility Address: NORTH HOLLYWOOD WELLFIELD AREA
NORTH HOLLYWOOD, CA 91601
Enforcement Action Type: CERCLA 122h Agrmt For Cost Recovery

SAN FERNANDO VALLEY (AREA 1) (Continued) **1000709322**

Facility County: LOS ANGELES
EPA Region #: 9

Enforcement Action ID: 09-1997-0172
FRS ID: 110009267961
Program ID: DTSC-ENVIROSTOR 19990011
Action Name: LOCKHEED MARTIN
Full Address: NORTH HOLLYWOOD WELLFIELD AREA NORTH HOLLYWOOD WELLFIELD AREA NORTH HOLLYWOOD CA 91601
State: California
Facility Name: SAN FERNANDO VALLEY (AREA 1)
Facility Address: NORTH HOLLYWOOD WELLFIELD AREA
NORTH HOLLYWOOD, CA 91601
Enforcement Action Type: Civil Judicial Action
Facility County: LOS ANGELES
EPA Region #: 9

Enforcement Action ID: 09-1997-0172
FRS ID: 110009267961
Program ID: FRS 110009267961
Action Name: LOCKHEED MARTIN
Full Address: NORTH HOLLYWOOD WELLFIELD AREA NORTH HOLLYWOOD WELLFIELD AREA NORTH HOLLYWOOD CA 91601
State: California
Facility Name: SAN FERNANDO VALLEY (AREA 1)
Facility Address: NORTH HOLLYWOOD WELLFIELD AREA
NORTH HOLLYWOOD, CA 91601
Enforcement Action Type: Civil Judicial Action
Facility County: LOS ANGELES
EPA Region #: 9

Enforcement Action ID: 09-1997-0172
FRS ID: 110009267961
Program ID: CERCLIS CAD980894893
Action Name: LOCKHEED MARTIN
Full Address: NORTH HOLLYWOOD WELLFIELD AREA NORTH HOLLYWOOD WELLFIELD AREA NORTH HOLLYWOOD CA 91601
State: California
Facility Name: SAN FERNANDO VALLEY (AREA 1)
Facility Address: NORTH HOLLYWOOD WELLFIELD AREA
NORTH HOLLYWOOD, CA 91601
Enforcement Action Type: Civil Judicial Action
Facility County: LOS ANGELES
EPA Region #: 9

Enforcement Action ID: 09-1997-0015
FRS ID: 110009267961
Program ID: CERCLIS CAD980894893
Action Name: SAN FERNANDO GLENDALE (NORTH AND SOUTH)
Full Address: NORTH HOLLYWOOD WELLFIELD AREA NORTH HOLLYWOOD WELLFIELD AREA NORTH HOLLYWOOD CA 91601
State: California
Facility Name: SAN FERNANDO VALLEY (AREA 1)
Facility Address: NORTH HOLLYWOOD WELLFIELD AREA
NORTH HOLLYWOOD, CA 91601
Enforcement Action Type: Civil Judicial Action
Facility County: LOS ANGELES

SAN FERNANDO VALLEY (AREA 1) (Continued) **1000709322**

EPA Region #: 9

Enforcement Action ID: 09-1997-0015
FRS ID: 110009267961
Program ID: DTSC-ENVIROSTOR 19990011
Action Name: SAN FERNANDO GLENDALE (NORTH AND SOUTH)
Full Address: NORTH HOLLYWOOD WELLFIELD AREA NORTH HOLLYWOOD WELLFIELD AREA NORTH HOLLYWOOD CA 91601
State: California
Facility Name: SAN FERNANDO VALLEY (AREA 1)
Facility Address: NORTH HOLLYWOOD WELLFIELD AREA
NORTH HOLLYWOOD, CA 91601
Enforcement Action Type: Civil Judicial Action
Facility County: LOS ANGELES
EPA Region #: 9

Enforcement Action ID: 09-1997-0015
FRS ID: 110009267961
Program ID: FRS 110009267961
Action Name: SAN FERNANDO GLENDALE (NORTH AND SOUTH)
Full Address: NORTH HOLLYWOOD WELLFIELD AREA NORTH HOLLYWOOD WELLFIELD AREA NORTH HOLLYWOOD CA 91601
State: California
Facility Name: SAN FERNANDO VALLEY (AREA 1)
Facility Address: NORTH HOLLYWOOD WELLFIELD AREA
NORTH HOLLYWOOD, CA 91601
Enforcement Action Type: Civil Judicial Action
Facility County: LOS ANGELES
EPA Region #: 9

Enforcement Action ID: 09-1997-0014
FRS ID: 110009267961
Program ID: DTSC-ENVIROSTOR 19990011
Action Name: SAN FERNANDO, GLENDALE
Full Address: NORTH HOLLYWOOD WELLFIELD AREA NORTH HOLLYWOOD WELLFIELD AREA NORTH HOLLYWOOD CA 91601
State: California
Facility Name: SAN FERNANDO VALLEY (AREA 1)
Facility Address: NORTH HOLLYWOOD WELLFIELD AREA
NORTH HOLLYWOOD, CA 91601
Enforcement Action Type: CERCLA 106 AO For Resp Action/Imm Haz
Facility County: LOS ANGELES
EPA Region #: 9

Enforcement Action ID: 09-1997-0014
FRS ID: 110009267961
Program ID: CERCLIS CAD980894893
Action Name: SAN FERNANDO, GLENDALE
Full Address: NORTH HOLLYWOOD WELLFIELD AREA NORTH HOLLYWOOD WELLFIELD AREA NORTH HOLLYWOOD CA 91601
State: California
Facility Name: SAN FERNANDO VALLEY (AREA 1)
Facility Address: NORTH HOLLYWOOD WELLFIELD AREA
NORTH HOLLYWOOD, CA 91601
Enforcement Action Type: CERCLA 106 AO For Resp Action/Imm Haz
Facility County: LOS ANGELES
EPA Region #: 9

SAN FERNANDO VALLEY (AREA 1) (Continued) **1000709322**

Enforcement Action ID: 09-1997-0014
FRS ID: 110009267961
Program ID: FRS 110009267961
Action Name: SAN FERNANDO, GLENDALE
Full Address: NORTH HOLLYWOOD WELLFIELD AREA NORTH HOLLYWOOD WELLFIELD AREA NORTH HOLLYWOOD CA 91601
State: California
Facility Name: SAN FERNANDO VALLEY (AREA 1)
Facility Address: NORTH HOLLYWOOD WELLFIELD AREA
NORTH HOLLYWOOD, CA 91601
Enforcement Action Type: CERCLA 106 AO For Resp Action/Imm Haz
Facility County: LOS ANGELES
EPA Region #: 9

Enforcement Action ID: 09-1993-0010
FRS ID: 110009267961
Program ID: FRS 110009267961
Action Name: ALLIED-SIGNAL INCORPORATED
Full Address: NORTH HOLLYWOOD WELLFIELD AREA NORTH HOLLYWOOD WELLFIELD AREA NORTH HOLLYWOOD CA 91601
State: California
Facility Name: SAN FERNANDO VALLEY (AREA 1)
Facility Address: NORTH HOLLYWOOD WELLFIELD AREA
NORTH HOLLYWOOD, CA 91601
Enforcement Action Type: Civil Judicial Action
Facility County: LOS ANGELES
EPA Region #: 9

Enforcement Action ID: 09-1993-0010
FRS ID: 110009267961
Program ID: CERCLIS CAD980894893
Action Name: ALLIED-SIGNAL INCORPORATED
Full Address: NORTH HOLLYWOOD WELLFIELD AREA NORTH HOLLYWOOD WELLFIELD AREA NORTH HOLLYWOOD CA 91601
State: California
Facility Name: SAN FERNANDO VALLEY (AREA 1)
Facility Address: NORTH HOLLYWOOD WELLFIELD AREA
NORTH HOLLYWOOD, CA 91601
Enforcement Action Type: Civil Judicial Action
Facility County: LOS ANGELES
EPA Region #: 9

Enforcement Action ID: 09-1993-0010
FRS ID: 110009267961
Program ID: DTSC-ENVIROSTOR 19990011
Action Name: ALLIED-SIGNAL INCORPORATED
Full Address: NORTH HOLLYWOOD WELLFIELD AREA NORTH HOLLYWOOD WELLFIELD AREA NORTH HOLLYWOOD CA 91601
State: California
Facility Name: SAN FERNANDO VALLEY (AREA 1)
Facility Address: NORTH HOLLYWOOD WELLFIELD AREA
NORTH HOLLYWOOD, CA 91601
Enforcement Action Type: Civil Judicial Action
Facility County: LOS ANGELES
EPA Region #: 9

Enforcement Action ID: 09-1991-0016

SAN FERNANDO VALLEY (AREA 1) (Continued) **1000709322**

FRS ID:	110009267961
Program ID:	CERCLIS CAD980894893
Action Name:	CITY OF BURBANK
Full Address:	NORTH HOLLYWOOD WELLFIELD AREA NORTH HOLLYWOOD WELLFIELD AREA NORTH HOLLYWOOD CA 91601
State:	California
Facility Name:	SAN FERNANDO VALLEY (AREA 1)
Facility Address:	NORTH HOLLYWOOD WELLFIELD AREA NORTH HOLLYWOOD, CA 91601
Enforcement Action Type:	Civil Judicial Action
Facility County:	LOS ANGELES
EPA Region #:	9

Enforcement Action ID:	09-1991-0016
FRS ID:	110009267961
Program ID:	FRS 110009267961
Action Name:	CITY OF BURBANK
Full Address:	NORTH HOLLYWOOD WELLFIELD AREA NORTH HOLLYWOOD WELLFIELD AREA NORTH HOLLYWOOD CA 91601
State:	California
Facility Name:	SAN FERNANDO VALLEY (AREA 1)
Facility Address:	NORTH HOLLYWOOD WELLFIELD AREA NORTH HOLLYWOOD, CA 91601
Enforcement Action Type:	Civil Judicial Action
Facility County:	LOS ANGELES
EPA Region #:	9

Enforcement Action ID:	09-1991-0016
FRS ID:	110009267961
Program ID:	DTSC-ENVIROSTOR 19990011
Action Name:	CITY OF BURBANK
Full Address:	NORTH HOLLYWOOD WELLFIELD AREA NORTH HOLLYWOOD WELLFIELD AREA NORTH HOLLYWOOD CA 91601
State:	California
Facility Name:	SAN FERNANDO VALLEY (AREA 1)
Facility Address:	NORTH HOLLYWOOD WELLFIELD AREA NORTH HOLLYWOOD, CA 91601
Enforcement Action Type:	Civil Judicial Action
Facility County:	LOS ANGELES
EPA Region #:	9

Program ID:	CERCLIS CAD980894893
Facility Name:	SAN FERNANDO VALLEY (AREA 1)
Address:	NORTH HOLLYWOOD WELLFIELD AREA
Tribal Indicator:	N
Fed Facility:	No
NAIC Code:	Not reported
SIC Code:	Not reported

Program ID:	DTSC-ENVIROSTOR 19990011
Facility Name:	SAN FERNANDO VALLEY (AREA 1)
Address:	NORTH HOLLYWOOD WELLFIELD AREA
Tribal Indicator:	N
Fed Facility:	No
NAIC Code:	Not reported
SIC Code:	Not reported

SAN FERNANDO VALLEY (AREA 1) (Continued) **1000709322**

Program ID: FRS 110009267961
Facility Name: SAN FERNANDO VALLEY (AREA 1)
Address: NORTH HOLLYWOOD WELLFIELD AREA
Tribal Indicator: N
Fed Facility: No
NAIC Code: Not reported
SIC Code: Not reported

Program ID: CERCLIS CAD980894893
Facility Name: SAN FERNANDO VALLEY (AREA 1)
Address: NORTH HOLLYWOOD WELLFIELD AREA
Tribal Indicator: N
Fed Facility: No
NAIC Code: Not reported
SIC Code: Not reported

Program ID: DTSC-ENVIROSTOR 19990011
Facility Name: SAN FERNANDO VALLEY (AREA 1)
Address: NORTH HOLLYWOOD WELLFIELD AREA
Tribal Indicator: N
Fed Facility: No
NAIC Code: Not reported
SIC Code: Not reported

Program ID: FRS 110009267961
Facility Name: SAN FERNANDO VALLEY (AREA 1)
Address: NORTH HOLLYWOOD WELLFIELD AREA
Tribal Indicator: N
Fed Facility: No
NAIC Code: Not reported
SIC Code: Not reported

Program ID: CERCLIS CAD980894893
Facility Name: SAN FERNANDO VALLEY (AREA 1)
Address: NORTH HOLLYWOOD WELLFIELD AREA
Tribal Indicator: N
Fed Facility: No
NAIC Code: Not reported
SIC Code: Not reported

Program ID: DTSC-ENVIROSTOR 19990011
Facility Name: SAN FERNANDO VALLEY (AREA 1)
Address: NORTH HOLLYWOOD WELLFIELD AREA
Tribal Indicator: N
Fed Facility: No
NAIC Code: Not reported
SIC Code: Not reported

Program ID: FRS 110009267961
Facility Name: SAN FERNANDO VALLEY (AREA 1)
Address: NORTH HOLLYWOOD WELLFIELD AREA
Tribal Indicator: N
Fed Facility: No
NAIC Code: Not reported
SIC Code: Not reported

Program ID: CERCLIS CAD980894893

SAN FERNANDO VALLEY (AREA 1) (Continued) **1000709322**

Facility Name: SAN FERNANDO VALLEY (AREA 1)
Address: NORTH HOLLYWOOD WELLFIELD AREA
Tribal Indicator: N
Fed Facility: No
NAIC Code: Not reported
SIC Code: Not reported

Program ID: DTSC-ENVIROSTOR 19990011
Facility Name: SAN FERNANDO VALLEY (AREA 1)
Address: NORTH HOLLYWOOD WELLFIELD AREA
Tribal Indicator: N
Fed Facility: No
NAIC Code: Not reported
SIC Code: Not reported

Program ID: FRS 110009267961
Facility Name: SAN FERNANDO VALLEY (AREA 1)
Address: NORTH HOLLYWOOD WELLFIELD AREA
Tribal Indicator: N
Fed Facility: No
NAIC Code: Not reported
SIC Code: Not reported

Program ID: CERCLIS CAD980894893
Facility Name: SAN FERNANDO VALLEY (AREA 1)
Address: NORTH HOLLYWOOD WELLFIELD AREA
Tribal Indicator: N
Fed Facility: No
NAIC Code: Not reported
SIC Code: Not reported

Program ID: DTSC-ENVIROSTOR 19990011
Facility Name: SAN FERNANDO VALLEY (AREA 1)
Address: NORTH HOLLYWOOD WELLFIELD AREA
Tribal Indicator: N
Fed Facility: No
NAIC Code: Not reported
SIC Code: Not reported

Program ID: FRS 110009267961
Facility Name: SAN FERNANDO VALLEY (AREA 1)
Address: NORTH HOLLYWOOD WELLFIELD AREA
Tribal Indicator: N
Fed Facility: No
NAIC Code: Not reported
SIC Code: Not reported

Program ID: CERCLIS CAD980894893
Facility Name: SAN FERNANDO VALLEY (AREA 1)
Address: NORTH HOLLYWOOD WELLFIELD AREA
Tribal Indicator: N
Fed Facility: No
NAIC Code: Not reported
SIC Code: Not reported

Program ID: DTSC-ENVIROSTOR 19990011
Facility Name: SAN FERNANDO VALLEY (AREA 1)

SAN FERNANDO VALLEY (AREA 1) (Continued) **1000709322**

Address: NORTH HOLLYWOOD WELLFIELD AREA
Tribal Indicator: N
Fed Facility: No
NAIC Code: Not reported
SIC Code: Not reported

Program ID: FRS 110009267961
Facility Name: SAN FERNANDO VALLEY (AREA 1)
Address: NORTH HOLLYWOOD WELLFIELD AREA
Tribal Indicator: N
Fed Facility: No
NAIC Code: Not reported
SIC Code: Not reported

Program ID: CERCLIS CAD980894893
Facility Name: SAN FERNANDO VALLEY (AREA 1)
Address: NORTH HOLLYWOOD WELLFIELD AREA
Tribal Indicator: N
Fed Facility: No
NAIC Code: Not reported
SIC Code: Not reported

Program ID: DTSC-ENVIROSTOR 19990011
Facility Name: SAN FERNANDO VALLEY (AREA 1)
Address: NORTH HOLLYWOOD WELLFIELD AREA
Tribal Indicator: N
Fed Facility: No
NAIC Code: Not reported
SIC Code: Not reported

Program ID: FRS 110009267961
Facility Name: SAN FERNANDO VALLEY (AREA 1)
Address: NORTH HOLLYWOOD WELLFIELD AREA
Tribal Indicator: N
Fed Facility: No
NAIC Code: Not reported
SIC Code: Not reported

Program ID: CERCLIS CAD980894893
Facility Name: SAN FERNANDO VALLEY (AREA 1)
Address: NORTH HOLLYWOOD WELLFIELD AREA
Tribal Indicator: N
Fed Facility: No
NAIC Code: Not reported
SIC Code: Not reported

Program ID: DTSC-ENVIROSTOR 19990011
Facility Name: SAN FERNANDO VALLEY (AREA 1)
Address: NORTH HOLLYWOOD WELLFIELD AREA
Tribal Indicator: N
Fed Facility: No
NAIC Code: Not reported
SIC Code: Not reported

Program ID: FRS 110009267961
Facility Name: SAN FERNANDO VALLEY (AREA 1)
Address: NORTH HOLLYWOOD WELLFIELD AREA

SAN FERNANDO VALLEY (AREA 1) (Continued) **1000709322**

Tribal Indicator: N
Fed Facility: No
NAIC Code: Not reported
SIC Code: Not reported

Program ID: CERCLIS CAD980894893
Facility Name: SAN FERNANDO VALLEY (AREA 1)
Address: NORTH HOLLYWOOD WELLFIELD AREA
Tribal Indicator: N
Fed Facility: No
NAIC Code: Not reported
SIC Code: Not reported

Program ID: DTSC-ENVIROSTOR 19990011
Facility Name: SAN FERNANDO VALLEY (AREA 1)
Address: NORTH HOLLYWOOD WELLFIELD AREA
Tribal Indicator: N
Fed Facility: No
NAIC Code: Not reported
SIC Code: Not reported

Program ID: FRS 110009267961
Facility Name: SAN FERNANDO VALLEY (AREA 1)
Address: NORTH HOLLYWOOD WELLFIELD AREA
Tribal Indicator: N
Fed Facility: No
NAIC Code: Not reported
SIC Code: Not reported

Program ID: CERCLIS CAD980894893
Facility Name: SAN FERNANDO VALLEY (AREA 1)
Address: NORTH HOLLYWOOD WELLFIELD AREA
Tribal Indicator: N
Fed Facility: No
NAIC Code: Not reported
SIC Code: Not reported

Program ID: DTSC-ENVIROSTOR 19990011
Facility Name: SAN FERNANDO VALLEY (AREA 1)
Address: NORTH HOLLYWOOD WELLFIELD AREA
Tribal Indicator: N
Fed Facility: No
NAIC Code: Not reported
SIC Code: Not reported

Program ID: FRS 110009267961
Facility Name: SAN FERNANDO VALLEY (AREA 1)
Address: NORTH HOLLYWOOD WELLFIELD AREA
Tribal Indicator: N
Fed Facility: No
NAIC Code: Not reported
SIC Code: Not reported

Program ID: CERCLIS CAD980894893
Facility Name: SAN FERNANDO VALLEY (AREA 1)
Address: NORTH HOLLYWOOD WELLFIELD AREA
Tribal Indicator: N

SAN FERNANDO VALLEY (AREA 1) (Continued) **1000709322**

Fed Facility: No
NAIC Code: Not reported
SIC Code: Not reported

Program ID: DTSC-ENVIROSTOR 19990011
Facility Name: SAN FERNANDO VALLEY (AREA 1)
Address: NORTH HOLLYWOOD WELLFIELD AREA
Tribal Indicator: N
Fed Facility: No
NAIC Code: Not reported
SIC Code: Not reported

Program ID: FRS 110009267961
Facility Name: SAN FERNANDO VALLEY (AREA 1)
Address: NORTH HOLLYWOOD WELLFIELD AREA
Tribal Indicator: N
Fed Facility: No
NAIC Code: Not reported
SIC Code: Not reported

Program ID: CERCLIS CAD980894893
Facility Name: SAN FERNANDO VALLEY (AREA 1)
Address: NORTH HOLLYWOOD WELLFIELD AREA
Tribal Indicator: N
Fed Facility: No
NAIC Code: Not reported
SIC Code: Not reported

Program ID: DTSC-ENVIROSTOR 19990011
Facility Name: SAN FERNANDO VALLEY (AREA 1)
Address: NORTH HOLLYWOOD WELLFIELD AREA
Tribal Indicator: N
Fed Facility: No
NAIC Code: Not reported
SIC Code: Not reported

Program ID: FRS 110009267961
Facility Name: SAN FERNANDO VALLEY (AREA 1)
Address: NORTH HOLLYWOOD WELLFIELD AREA
Tribal Indicator: N
Fed Facility: No
NAIC Code: Not reported
SIC Code: Not reported

Program ID: CERCLIS CAD980894893
Facility Name: SAN FERNANDO VALLEY (AREA 1)
Address: NORTH HOLLYWOOD WELLFIELD AREA
Tribal Indicator: N
Fed Facility: No
NAIC Code: Not reported
SIC Code: Not reported

Program ID: DTSC-ENVIROSTOR 19990011
Facility Name: SAN FERNANDO VALLEY (AREA 1)
Address: NORTH HOLLYWOOD WELLFIELD AREA
Tribal Indicator: N
Fed Facility: No

SAN FERNANDO VALLEY (AREA 1) (Continued) **1000709322**

NAIC Code: Not reported
SIC Code: Not reported

Program ID: FRS 110009267961
Facility Name: SAN FERNANDO VALLEY (AREA 1)
Address: NORTH HOLLYWOOD WELLFIELD AREA
Tribal Indicator: N
Fed Facility: No
NAIC Code: Not reported
SIC Code: Not reported

Program ID: CERCLIS CAD980894893
Facility Name: SAN FERNANDO VALLEY (AREA 1)
Address: NORTH HOLLYWOOD WELLFIELD AREA
Tribal Indicator: N
Fed Facility: No
NAIC Code: Not reported
SIC Code: Not reported

Program ID: DTSC-ENVIROSTOR 19990011
Facility Name: SAN FERNANDO VALLEY (AREA 1)
Address: NORTH HOLLYWOOD WELLFIELD AREA
Tribal Indicator: N
Fed Facility: No
NAIC Code: Not reported
SIC Code: Not reported

Program ID: FRS 110009267961
Facility Name: SAN FERNANDO VALLEY (AREA 1)
Address: NORTH HOLLYWOOD WELLFIELD AREA
Tribal Indicator: N
Fed Facility: No
NAIC Code: Not reported
SIC Code: Not reported

Program ID: CERCLIS CAD980894893
Facility Name: SAN FERNANDO VALLEY (AREA 1)
Address: NORTH HOLLYWOOD WELLFIELD AREA
Tribal Indicator: N
Fed Facility: No
NAIC Code: Not reported
SIC Code: Not reported

Program ID: DTSC-ENVIROSTOR 19990011
Facility Name: SAN FERNANDO VALLEY (AREA 1)
Address: NORTH HOLLYWOOD WELLFIELD AREA
Tribal Indicator: N
Fed Facility: No
NAIC Code: Not reported
SIC Code: Not reported

Program ID: FRS 110009267961
Facility Name: SAN FERNANDO VALLEY (AREA 1)
Address: NORTH HOLLYWOOD WELLFIELD AREA
Tribal Indicator: N
Fed Facility: No
NAIC Code: Not reported

SAN FERNANDO VALLEY (AREA 1) (Continued) **1000709322**

SIC Code: Not reported

FINDS:

Registry ID: 110009267961

Environmental Interest/Information System

California Department of Toxic Substances Control EnviroStor System (DTSC-EnviroStor) is an online search and Geographic Information System (GIS) tool for identifying sites that have known contamination or sites for which there may be reasons to investigate further. The EnviroStor database includes the following site types: Federal Superfund sites (National Priorities List (NPL)); State Response, including Military Facilities and State Superfund; Voluntary Cleanup; and School sites.

CERCLIS (Comprehensive Environmental Response, Compensation, and Liability Information System) is the Superfund database that is used to support management in all phases of the Superfund program. The system contains information on all aspects of hazardous waste sites, including an inventory of sites, planned and actual site activities, and financial information.

ICIS (Integrated Compliance Information System) is the Integrated Compliance Information System and provides a database that, when complete, will contain integrated Enforcement and Compliance information across most of EPA's programs. The vision for ICIS is to replace EPA's independent databases that contain Enforcement data with a single repository for that information. Currently, ICIS contains all Federal Administrative and Judicial enforcement actions. This information is maintained in ICIS by EPA in the Regional offices and it Headquarters. A future release of ICIS will replace the Permit Compliance System (PCS) which supports the NPDES and will integrate that information with Federal actions already in the system. ICIS also has the capability to track other activities occurring in the Region that support Compliance and Enforcement programs. These include; Incident Tracking, Compliance Assistance, and Compliance Monitoring.

Calsite:

Region:	GLENDALE
Facility ID:	19990011
Facility Type:	NPJF
Type:	NPL SITE, JOINT STATE/FEDERAL-FUNDED
Branch:	SA
Branch Name:	SO CAL - GLENDALE
File Name:	Not reported
State Senate District:	05151996
Status:	ANNUAL WORKPLAN (AWP) - ACTIVE SITE
Status Name:	ANNUAL WORKPLAN - ACTIVE SITE
Lead Agency:	ENVIRONMENTAL PROTECTION AGENCY
NPL:	Listed
SIC Code:	99
SIC Name:	NONCLASSIFIABLE ESTABLISHMENTS
Access:	Not reported
Cortese:	Not reported

SAN FERNANDO VALLEY (AREA 1) (Continued) **1000709322**

Hazardous Ranking Score:	Not reported
Date Site Hazard Ranked:	Not reported
Groundwater Contamination:	Confirmed
Staff Member Responsible for Site:	TYARGEAU
Supervisor Responsible for Site:	Not reported
Region Water Control Board:	LA
Region Water Control Board Name:	LOS ANGELES
Lat/Long Direction:	Not reported
Lat/Long (dms):	0 0 0 / 0 0 0
Lat/long Method:	Not reported
Lat/Long Description:	Not reported
State Assembly District Code:	43
State Senate District Code:	20
Facility ID:	19990011
Activity:	RAP
Activity Name:	REMEDIAL ACTION PLAN / RECORD OF DECISION
AWP Code:	NH
Proposed Budget:	0
AWP Completion Date:	Not reported
Revised Due Date:	Not reported
Comments Date:	09301987
Est Person-Yrs to complete:	0
Estimated Size:	Not reported
Request to Delete Activity:	Not reported
Activity Status:	AWP
Definition of Status:	ANNUAL WORKPLAN - ACTIVE SITE
Liquids Removed (Gals):	0
Liquids Treated (Gals):	0
Action Included Capping:	Not reported
Well Decommissioned:	Not reported
Action Included Fencing:	Not reported
Removal Action Certification:	Not reported
Activity Comments:	Not reported
For Commercial Reuse:	0
For Industrial Reuse:	0
For Residential Reuse:	0
Unknown Type:	0
Facility ID:	19990011
Activity:	RIFS
Activity Name:	REMEDIAL INVESTIGATION / FEASIBILITY STUDY
AWP Code:	NH
Proposed Budget:	0
AWP Completion Date:	Not reported
Revised Due Date:	Not reported
Comments Date:	09301987
Est Person-Yrs to complete:	0
Estimated Size:	Not reported
Request to Delete Activity:	Not reported
Activity Status:	AWP
Definition of Status:	ANNUAL WORKPLAN - ACTIVE SITE
Liquids Removed (Gals):	0
Liquids Treated (Gals):	0
Action Included Capping:	Not reported
Well Decommissioned:	Not reported
Action Included Fencing:	Not reported
Removal Action Certification:	Not reported
Activity Comments:	Not reported

SAN FERNANDO VALLEY (AREA 1) (Continued) **1000709322**

For Commercial Reuse:	0
For Industrial Reuse:	0
For Residential Reuse:	0
Unknown Type:	0
Facility ID:	19990011
Activity:	RA
Activity Name:	REMOVAL ACTION
AWP Code:	NH
Proposed Budget:	0
AWP Completion Date:	Not reported
Revised Due Date:	Not reported
Comments Date:	03311989
Est Person-Yrs to complete:	0
Estimated Size:	Not reported
Request to Delete Activity:	Not reported
Activity Status:	AWP
Definition of Status:	ANNUAL WORKPLAN - ACTIVE SITE
Liquids Removed (Gals):	0
Liquids Treated (Gals):	0
Action Included Capping:	Not reported
Well Decommissioned:	Not reported
Action Included Fencing:	Not reported
Removal Action Certification:	Not reported
Activity Comments:	Not reported
For Commercial Reuse:	0
For Industrial Reuse:	0
For Residential Reuse:	0
Unknown Type:	0
Facility ID:	19990011
Activity:	RAP
Activity Name:	REMEDIAL ACTION PLAN / RECORD OF DECISION
AWP Code:	B
Proposed Budget:	0
AWP Completion Date:	Not reported
Revised Due Date:	Not reported
Comments Date:	06301989
Est Person-Yrs to complete:	0
Estimated Size:	Not reported
Request to Delete Activity:	Not reported
Activity Status:	AWP
Definition of Status:	ANNUAL WORKPLAN - ACTIVE SITE
Liquids Removed (Gals):	0
Liquids Treated (Gals):	0
Action Included Capping:	Not reported
Well Decommissioned:	Not reported
Action Included Fencing:	Not reported
Removal Action Certification:	Not reported
Activity Comments:	Not reported
For Commercial Reuse:	0
For Industrial Reuse:	0
For Residential Reuse:	0
Unknown Type:	0
Facility ID:	19990011
Activity:	RIFS
Activity Name:	REMEDIAL INVESTIGATION / FEASIBILITY STUDY
AWP Code:	B
Proposed Budget:	0

SAN FERNANDO VALLEY (AREA 1) (Continued) **1000709322**

AWP Completion Date:	Not reported
Revised Due Date:	Not reported
Comments Date:	06301989
Est Person-Yrs to complete:	0
Estimated Size:	Not reported
Request to Delete Activity:	Not reported
Activity Status:	AWP
Definition of Status:	ANNUAL WORKPLAN - ACTIVE SITE
Liquids Removed (Gals):	0
Liquids Treated (Gals):	0
Action Included Capping:	Not reported
Well Decommissioned:	Not reported
Action Included Fencing:	Not reported
Removal Action Certification:	Not reported
Activity Comments:	Not reported
For Commercial Reuse:	0
For Industrial Reuse:	0
For Residential Reuse:	0
Unknown Type:	0
Facility ID:	19990011
Activity:	PPP
Activity Name:	PUBLIC PARTICIPATION PLAN
AWP Code:	Not reported
Proposed Budget:	0
AWP Completion Date:	Not reported
Revised Due Date:	Not reported
Comments Date:	04301990
Est Person-Yrs to complete:	0
Estimated Size:	Not reported
Request to Delete Activity:	Not reported
Activity Status:	AWP
Definition of Status:	ANNUAL WORKPLAN - ACTIVE SITE
Liquids Removed (Gals):	0
Liquids Treated (Gals):	0
Action Included Capping:	Not reported
Well Decommissioned:	Not reported
Action Included Fencing:	Not reported
Removal Action Certification:	Not reported
Activity Comments:	Not reported
For Commercial Reuse:	0
For Industrial Reuse:	0
For Residential Reuse:	0
Unknown Type:	0
Facility ID:	19990011
Activity:	DES
Activity Name:	DESIGN
AWP Code:	B-PH1
Proposed Budget:	0
AWP Completion Date:	Not reported
Revised Due Date:	Not reported
Comments Date:	03311997
Est Person-Yrs to complete:	0.30000
Estimated Size:	X
Request to Delete Activity:	Not reported
Activity Status:	AWP
Definition of Status:	ANNUAL WORKPLAN - ACTIVE SITE
Liquids Removed (Gals):	0

SAN FERNANDO VALLEY (AREA 1) (Continued) **1000709322**

Liquids Treated (Gals):	0
Action Included Capping:	Not reported
Well Decommissioned:	Not reported
Action Included Fencing:	Not reported
Removal Action Certification:	Not reported
Activity Comments:	Not reported
For Commercial Reuse:	0
For Industrial Reuse:	0
For Residential Reuse:	0
Unknown Type:	0
Facility ID:	19990011
Activity:	COST
Activity Name:	COST RECOVERY
AWP Code:	NH1/1
Proposed Budget:	0
AWP Completion Date:	Not reported
Revised Due Date:	Not reported
Comments Date:	09041996
Est Person-Yrs to complete:	0
Estimated Size:	X
Request to Delete Activity:	Not reported
Activity Status:	AWP
Definition of Status:	ANNUAL WORKPLAN - ACTIVE SITE
Liquids Removed (Gals):	0
Liquids Treated (Gals):	0
Action Included Capping:	Not reported
Well Decommissioned:	Not reported
Action Included Fencing:	Not reported
Removal Action Certification:	Not reported
Activity Comments:	Not reported
For Commercial Reuse:	0
For Industrial Reuse:	0
For Residential Reuse:	0
Unknown Type:	0
Facility ID:	19990011
Activity:	OM
Activity Name:	OPERATION & MAINTENANCE
AWP Code:	NH OU
Proposed Budget:	0
AWP Completion Date:	06302009
Revised Due Date:	Not reported
Comments Date:	Not reported
Est Person-Yrs to complete:	0
Estimated Size:	M
Request to Delete Activity:	Not reported
Activity Status:	AWP
Definition of Status:	ANNUAL WORKPLAN - ACTIVE SITE
Liquids Removed (Gals):	0
Liquids Treated (Gals):	0
Action Included Capping:	Not reported
Well Decommissioned:	Not reported
Action Included Fencing:	Not reported
Removal Action Certification:	Not reported
Activity Comments:	Not reported
For Commercial Reuse:	0
For Industrial Reuse:	0
For Residential Reuse:	0

SAN FERNANDO VALLEY (AREA 1) (Continued) **1000709322**

Unknown Type:	0
Facility ID:	19990011
Activity:	COST
Activity Name:	COST RECOVERY
AWP Code:	NH2/1
Proposed Budget:	0
AWP Completion Date:	Not reported
Revised Due Date:	Not reported
Comments Date:	06201997
Est Person-Yrs to complete:	0
Estimated Size:	Not reported
Request to Delete Activity:	Not reported
Activity Status:	AWP
Definition of Status:	ANNUAL WORKPLAN - ACTIVE SITE
Liquids Removed (Gals):	0
Liquids Treated (Gals):	0
Action Included Capping:	Not reported
Well Decommissioned:	Not reported
Action Included Fencing:	Not reported
Removal Action Certification:	Not reported
Activity Comments:	Not reported
For Commercial Reuse:	0
For Industrial Reuse:	0
For Residential Reuse:	0
Unknown Type:	0
Facility ID:	19990011
Activity:	DES
Activity Name:	DESIGN
AWP Code:	B-PH2
Proposed Budget:	0
AWP Completion Date:	Not reported
Revised Due Date:	Not reported
Comments Date:	11171997
Est Person-Yrs to complete:	0
Estimated Size:	Not reported
Request to Delete Activity:	Not reported
Activity Status:	AWP
Definition of Status:	ANNUAL WORKPLAN - ACTIVE SITE
Liquids Removed (Gals):	0
Liquids Treated (Gals):	0
Action Included Capping:	Not reported
Well Decommissioned:	Not reported
Action Included Fencing:	Not reported
Removal Action Certification:	Not reported
Activity Comments:	Not reported
For Commercial Reuse:	0
For Industrial Reuse:	0
For Residential Reuse:	0
Unknown Type:	0
Facility ID:	19990011
Activity:	ORDER
Activity Name:	I/SE, IORSE, FFA, FFSRA, VCA, EA
AWP Code:	CSNH1
Proposed Budget:	0
AWP Completion Date:	Not reported
Revised Due Date:	Not reported
Comments Date:	08011996

SAN FERNANDO VALLEY (AREA 1) (Continued) **1000709322**

Est Person-Yrs to complete:	0
Estimated Size:	Not reported
Request to Delete Activity:	Not reported
Activity Status:	AWP
Definition of Status:	ANNUAL WORKPLAN - ACTIVE SITE
Liquids Removed (Gals):	0
Liquids Treated (Gals):	0
Action Included Capping:	Not reported
Well Decommissioned:	Not reported
Action Included Fencing:	Not reported
Removal Action Certification:	Not reported
Activity Comments:	Not reported
For Commercial Reuse:	0
For Industrial Reuse:	0
For Residential Reuse:	0
Unknown Type:	0
Facility ID:	19990011
Activity:	ORDER
Activity Name:	I/SE, IORSE, FFA, FFSRA, VCA, EA
AWP Code:	CSNH2
Proposed Budget:	0
AWP Completion Date:	Not reported
Revised Due Date:	Not reported
Comments Date:	05141997
Est Person-Yrs to complete:	0
Estimated Size:	Not reported
Request to Delete Activity:	Not reported
Activity Status:	AWP
Definition of Status:	ANNUAL WORKPLAN - ACTIVE SITE
Liquids Removed (Gals):	0
Liquids Treated (Gals):	0
Action Included Capping:	Not reported
Well Decommissioned:	Not reported
Action Included Fencing:	Not reported
Removal Action Certification:	Not reported
Activity Comments:	Not reported
For Commercial Reuse:	0
For Industrial Reuse:	0
For Residential Reuse:	0
Unknown Type:	0
Facility ID:	19990011
Activity:	ORDER
Activity Name:	I/SE, IORSE, FFA, FFSRA, VCA, EA
AWP Code:	CD-B2
Proposed Budget:	0
AWP Completion Date:	Not reported
Revised Due Date:	Not reported
Comments Date:	06241997
Est Person-Yrs to complete:	0
Estimated Size:	Not reported
Request to Delete Activity:	Not reported
Activity Status:	AWP
Definition of Status:	ANNUAL WORKPLAN - ACTIVE SITE
Liquids Removed (Gals):	0
Liquids Treated (Gals):	0
Action Included Capping:	Not reported
Well Decommissioned:	Not reported

SAN FERNANDO VALLEY (AREA 1) (Continued) **1000709322**

Action Included Fencing:	Not reported
Removal Action Certification:	Not reported
Activity Comments:	Not reported
For Commercial Reuse:	0
For Industrial Reuse:	0
For Residential Reuse:	0
Unknown Type:	0
Facility ID:	19990011
Activity:	5YEAR
Activity Name:	FIVE-YEAR REVIEW REQUIRED BY CERCLA
AWP Code:	NH OU
Proposed Budget:	0
AWP Completion Date:	Not reported
Revised Due Date:	Not reported
Comments Date:	08171998
Est Person-Yrs to complete:	0
Estimated Size:	Not reported
Request to Delete Activity:	Not reported
Activity Status:	AWP
Definition of Status:	ANNUAL WORKPLAN - ACTIVE SITE
Liquids Removed (Gals):	0
Liquids Treated (Gals):	0
Action Included Capping:	Not reported
Well Decommissioned:	Not reported
Action Included Fencing:	Not reported
Removal Action Certification:	Not reported
Activity Comments:	Not reported
For Commercial Reuse:	0
For Industrial Reuse:	0
For Residential Reuse:	0
Unknown Type:	0
Alternate Address:	NORTH HOLLYWOOD AREA
Alternate City,St,Zip:	NORTH HOLLYWOOD, CA 91606
Alternate Address:	NORTH HOLLYWOOD WELLFIELD AREA
Alternate City,St,Zip:	LOS ANGELES, CA 91601
Alternate Address:	BURBANK
Alternate City,St,Zip:	BURBANK, CA 91502

Background Info:

The San Fernando Valley Ground Water Basin (SFVGWB) is located within the Upper Los Angeles River Area, and consists of the eastern portion of the San Fernando Valley and the entire Verdugo Basin. The SFVGWB encompasses approximately 112,000 acres of alluvial valley fill deposits and provides enough water to serve approximately 600,000 residents. The Basin is bounded on the north and the northwest by the Santa Susana Mountains, on the northeast by the San Gabriel Mountains, on the west by the Simi Hills and on the south by the Santa Monica Mountains.

The San Fernando Valley Study area includes four National Priorities List (NPL) sites. They are:

Area #1 - North Hollywood NPL Site covers 9336 acres in the eastern part of the San Fernando Valley. The site has been divided into the North Hollywood Operable Unit(OU) and the Burbank OU.

Area #2 - Crystal Springs NPL Site covers 3975 acres located southeast of the North Hollywood NPL site and is in the cities of Glendale and Los Angeles.

Area #3 - Verdugo NPL Site covers 2673 acres in the eastern part of the SF Valley and is located in and adjacent to La

SAN FERNANDO VALLEY (AREA 1) (Continued) **1000709322**

Crescenta in the Verdugo Mountains.
Area #4 - the Pollock NPL Site covers 1635 acres in the south-eastern part of the San Fernando Valley and is located in and adjacent to the cities of Los Angeles and Glendale.
Groundwater contamination in the SFVGWB is linked to prewar, postwar, and current industrialization in the San Fernando Valley.
The primary contaminants of concern are the volatile organic compounds (VOCs) trichloroethylene (TCE) and tetrachloroethylene (PCE). These compounds have been and/or are being used in many San Fernando Valley industries, such as aeronautical, automotive dry cleaning, and metal plating. These solvents have found their way to the groundwater basin as a result of both past and improper use, storage and disposal practices. The SFVGWB Superfund sites, added to the NPL in 1986, are areas where groundwater from wells have been found to contain VOCs above the state and federal drinking water standards. Groundwater contamination in numerous wells have been so severe with TCE and PCE that these wells have essentially been put out of commission.
Exposure of receptors to contaminants can possibly occur through ingestion of contaminated drinking water, inhalation of VOC vapors released from the contaminated water as in taking showers, and dermal exposure as in washing or bathing. However, with the strict regulatory control over water quality by the State's Department of Health, Office of Drinking Water (ODW), the RWQCB, and other agencies, residents are assured that the water they consume is safe and that no one is drinking water which contains concentrations of contaminants above regulatory standards. Federal, state, and local agencies have been conducting investigations and cleanup of contaminated groundwater in the San Fernando Valley since contamination was discovered in 1979. These activities involve measuring the extent of contamination, developing and implementing cleanup remedies, and identifying responsible parties.
EPA provided oversight of the basinwide Remedial Investigation (RI) of groundwater contamination conducted by the Los Angeles Department of Water and Power (LADWP). The RI objectives were to collect lithological and water quality data and information regarding basin operations for the eastern SF and Verdugo basins; develop a regional characterization of geology, hydrology, hydrogeology and the nature and extent of groundwater contamination within the eastern and Verdugo basins; study fate and transport of compounds in the environment; identify Applicable or Relevant and Appropriate Requirements; (ARAR's) and evaluate the potential risk to human health and the environment.
The Remedial Investigation of the SFVGWB was divided into two phases.
Phase I activities have included vertical profile borings and installation of monitoring wells to obtain preliminary contamination information. Monitoring wells have been installed as follows: 34 in North Hollywood (Area #1); 29 in Crystal Springs (Area #2); 7 in Verdugo (Area #3); and 17 in Pollock (Area #4).
Information obtained from Phase I investigation activities identified the need for several operable units. Operable Unit is a federal term which is similar to the State's definition of a removal action.

SAN FERNANDO VALLEY (AREA 1) (Continued) **1000709322**

Phase II activities consist of a basinwide remedial investigation conducted by the LADWP.
Remedial Actions (RAs):
North Hollywood (Area #1) -- Two RAs were identified for Area #1, the North Hollywood OU and the Burbank OU.
A Record of Decision (ROD) for the North Hollywood RA was signed in September 1987, selecting groundwater extraction and treatment (air stripping) of 2,000 gallons per minute (gpm) of contaminated water as an interim remedy. This RA was constructed with funding from EPA and the State and has been treating contaminated groundwater since March 1989. This facility is located at 11845 Vose Street in the N. Hollywood section of Los Angeles.
A ROD for the Burbank OU was signed in June 1989, again selecting groundwater extraction and treatment of about 12,000 gpm of contaminated water. Phase I of the Burbank OU began operations in January 1996 treating groundwater at a rate of 6,000 gpm. Phase II began operations in May 1998 adding an additional 3,000 gpm to the Burbank OU's treatment capacity.
Crystal Springs (Area #2) -- LADWP has completed a focused RI/FS for this proposed RA. The Glendale OU has been separated into a North OU and a South OU based on the amount of contamination and the facilities contributing to the GW contamination. A ROD for each OU was signed on June 18, 1993 designating groundwater extraction and treatment as the interim remeday. The PRPs have formed a group and combined the RA efforts for each OU into one document. The selected alternative is GW extraction and treatment. The Glendale OU began operations in September 2000.
Verdugo and Pollock (Areas #3 and #4) --
Currently no RAs have been identified for Area #3 or for Area #4. In October 2003 US EPA proposed No Remedial Action for Verdugo Basin (Area #3).
Another contaminant of concern, hexavalent chromium, has been identified in the San Fernando Valley Groundwater Basin.
EPA and the RWQCB are currently dentifying potential sources of contamination and pursuing PRPs that may be responsible for contaminating groundwater. As these PRPs are identified, individual site investigations and mitigation activities will be pursued. Enforceable agreements and orders will be implemented at numerous specific potential source sites within the Basin by RWQCB and DTSC

Comments Date: 01011984
Comments: Groundwater contaminated with TCE and PCE is discovered.
Comments Date: 01011984
Comments: Site covers approximately 5254 acres.
Comments Date: 04141996
Comments: Consent Decree between EPA, DTSC and settling PRPs lodged
Comments Date: 04141996
Comments: with the court. Negotiations with non-settling PRPs
Comments Date: 04141996
Comments: continue.
Comments Date: 04241994
Comments: The U.S. EPA is in the process of recovering costs from
Comments Date: 04241994

SAN FERNANDO VALLEY (AREA 1) (Continued) **1000709322**

Comments: the PRPs. DOJ is pursuing the cost recovery for DTSC.
Comments Date: 04241994
Comments: The cooperative PRPs are willing to settle if they are
Comments Date: 04241994
Comments: guaranteed contribution protection from the non-settling
Comments Date: 04241994
Comments: PRPs (so that they cannot be named as a party to the
Comments Date: 04241994
Comments: suit by the non-settling PRPs). DTSC is providing
Comments Date: 04241994
Comments: documentation to DOJ (i.e. timesheets) to determine
Comments Date: 04241994
Comments: staff time charged to the project. EPA is pursuing
Comments Date: 04241994
Comments: legal action against the non-settling PRPs to recover
Comments Date: 04241994
Comments: costs of past and future oversight.
Comments Date: 05022002
Comments: EPA issues fine against Lockheed Martin for 1.37 million for
Comments Date: 05022002
Comments: Force Majeure claim on Burbank Operable Unit.
Comments Date: 05131998
Comments: 11/17/97-The phase 2 design adds an additional well (wp-180)
Comments Date: 05131998
Comments: and pipeline for extraction and treatment at the Burbank
Comments Date: 05131998
Comments: operable unit. This adds an additional 3,000 gpm to the treatmen
Comments Date: 05131998
Comments: system. Additional amendments to the design include changing the
Comments Date: 05131998
Comments: Liquid Phase Granular Activated Carbon (LPGAC) bed system from an
Comments Date: 05131998
Comments: upflow to a downflow configuration, and the addition of a LPGAC
Comments Date: 05131998
Comments: backflush filtration system for continuous backflush to the
Comments Date: 05131998
Comments: plant's storm drain discharge.
Comments Date: 05141997
Comments: The second partial consent decree to recover DTSC's past cost is
Comments Date: 05141997
Comments: signed on May 14, 1997. This also concludes the litigation for
Comments Date: 05141997
Comments: the interim remedy at the North Hollywood OU.
Comments Date: 06201997
Comments: DTSC recovers costs in accordance with the Second Partial
Comments Date: 06201997
Comments: Consent Decree for the interim remedy at the NHOU. Two
Comments Date: 06201997
Comments: additional payments are due by 5/14/98 and and 5/14/99.
Comments Date: 06241997
Comments: A second partial Consent Decree, dated June 24, 1997, requires
Comments Date: 06241997
Comments: reimbursement to the State by Lockheed-Martin of certain past
Comments Date: 06241997
Comments: costs and annual billing for future site specific response costs.
Comments Date: 08011996
Comments: The first partial consent decree is entered by the Federal

SAN FERNANDO VALLEY (AREA 1) (Continued) **1000709322**

Comments Date: 08011996
Comments: District court on August 1, 1996.
Comments Date: 08171998
Comments: A second 5-year review of remedial activities is conducted at
Comments Date: 08171998
Comments: the North Hollywood OU (NHOU) and covers operations from 1993
Comments Date: 08171998
Comments: thru 1997. The purpose was to evaluate whether the NH Interim
Comments Date: 08171998
Comments: Remedy achieved the objectives specified in the ROD. The
Comments Date: 08171998
Comments: findings of the 5-year review are that the objectives of the
Comments Date: 08171998
Comments: ROD have been met.
Comments Date: 09041996
Comments: Costs are recovered by DTSC in accordance with the First
Comments Date: 09041996
Comments: Partial Consent Decree for interim remedial action at the North
Comments Date: 09041996
Comments: Hollywood OU (NHOU). An additional payment is due by 08/01/97.
Comments Date: 09202001
Comments: The facility has been operating continuously with six water
Comments Date: 09202001
Comments: supply wells on line. This past quarter approximately 175
Comments Date: 09202001
Comments: million gallons of water was treated down to non-detect levels
Comments Date: 09202001
Comments: of contamination.
Comments Date: 12191999
Comments: Negotiating new state superfund contract between U.S. EPA, DTSC,
Comments Date: 12191999
Comments: and the Los Angeles Department of Water and Power to provide for
Comments Date: 12191999
Comments: continued funding of operation and maintenance of the NHOU.
ID Name: CALSTARS CODE
ID Value: 300127
ID Name: CALSTARS CODE
ID Value: 300126
ID Name: BEP DATABASE PCODE
ID Value: P31031
Alternate Name: SAN FERNANDO VALLEY GW BASIN AREA 1NORTH HOLLYWOOD OUFSSAN FERNANDO VALLEY (AREA 1)BURBANK OU
Special Programs Code: MSCA
Special Programs Name: MULTI-SITE COOPERATIVE AGREEMENT

CORTESE:
Region: CORTESE
Envirostor Id: 19990011
Site/Facility Type: FEDERAL SUPERFUND - LISTED
Cleanup Status: ACTIVE
Status Date: 05/15/1996
Site Code: 300126, 300173, 300287
Latitude: 34.1875
Longitude: -118.38388
Owner: Not reported
Enf Type: Not reported
Swat R: Not reported

SAN FERNANDO VALLEY (AREA 1) (Continued) **1000709322**

Flag:	envirostor
Order No:	Not reported
Waste Discharge System No:	Not reported
Effective Date:	Not reported
Region 2:	Not reported
WID Id:	Not reported
Solid Waste Id No:	Not reported
Waste Management Uit Name:	Not reported

ENVIROSTOR:

Facility ID:	19990011
Status:	Active
Status Date:	05/15/1996
Site Code:	300287
Site Type:	Federal Superfund
Site Type Detailed:	State Response or NPL
Acres:	5254
NPL:	YES
Regulatory Agencies:	SMBRP, RWQCB 4 - Los Angeles, US EPA
Lead Agency:	US EPA
Program Manager:	Tedd Yargeau
Supervisor:	Javier Hinojosa
Division Branch:	Cleanup Chatsworth
Assembly:	39
Senate:	20
Special Program:	Not reported
Restricted Use:	NO
Site Mgmt Req:	NONE SPECIFIED
Funding:	Responsible Party
Latitude:	34.1875
Longitude:	-118.3838
APN:	NONE SPECIFIED
Past Use:	AEROSPACE MANUFACTURING/MAINTENANCE, MACHINE SHOP, MANUFACTURING - METAL, METAL FINISHING, METAL PLATING - CHROME, METAL PLATING - OTHER, RESEARCH - AEROSPACE
Potential COC:	Tetrachloroethylene (PCE 1,1,1-Trichloroethane (TCA Trichloroethylene (TCE Chromium III Chromium VI
Confirmed COC:	Tetrachloroethylene (PCE 1,1,1-Trichloroethane (TCA Trichloroethylene (TCE Chromium III Chromium VI
Potential Description:	AQUI, SOIL
Alias Name:	BURBANK OU
Alias Type:	Alternate Name
Alias Name:	NORTH HOLLYWOOD OUFS
Alias Type:	Alternate Name
Alias Name:	SAN FERNANDO VALLEY GW BASIN AREA 1
Alias Type:	Alternate Name
Alias Name:	CAD980894893
Alias Type:	CERCLIS ID
Alias Name:	110009267961
Alias Type:	EPA (FRS #)
Alias Name:	P31031
Alias Type:	PCode
Alias Name:	300126
Alias Type:	Project Code (Site Code)
Alias Name:	300173
Alias Type:	Project Code (Site Code)
Alias Name:	300287

SAN FERNANDO VALLEY (AREA 1) (Continued) **1000709322**

Alias Type: Project Code (Site Code)
Alias Name: 19990011
Alias Type: Envirostor ID Number

Completed Info:
Completed Area Name: PROJECT WIDE
Completed Sub Area Name: Not reported
Completed Document Type: 5 Year Review Reports
Completed Date: 08/17/1998
Comments: A second 5-year review of remedial activities is conducted at the North Hollywood OU (NHOU) and covers operations from 1993 thru 1997. The purpose was to evaluate whether the NH Interim Remedy achieved the objectives specified in the ROD. The findings of the 5-year review are that the objectives of the ROD have been met.

Completed Area Name: PROJECT WIDE
Completed Sub Area Name: Not reported
Completed Document Type: Design/Implementation Workplan
Completed Date: 11/17/1997
Comments: Not reported

Completed Area Name: PROJECT WIDE
Completed Sub Area Name: Not reported
Completed Document Type: Design/Implementation Workplan
Completed Date: 03/31/1997
Comments: Not reported

Completed Area Name: PROJECT WIDE
Completed Sub Area Name: Not reported
Completed Document Type: Public Participation Plan / Community Relations Plan
Completed Date: 04/30/1990
Comments: Not reported

Completed Area Name: PROJECT WIDE
Completed Sub Area Name: Not reported
Completed Document Type: Remedial Investigation / Feasibility Study
Completed Date: 06/30/1989
Comments: Not reported

Completed Area Name: PROJECT WIDE
Completed Sub Area Name: Not reported
Completed Document Type: Remedial Action Plan
Completed Date: 06/30/1989
Comments: Not reported

Completed Area Name: PROJECT WIDE
Completed Sub Area Name: Not reported
Completed Document Type: Removal Action Completion Report
Completed Date: 03/31/1989
Comments: Not reported

Completed Area Name: PROJECT WIDE
Completed Sub Area Name: Not reported
Completed Document Type: Remedial Investigation / Feasibility Study
Completed Date: 09/30/1987
Comments: Not reported

Completed Area Name: PROJECT WIDE

SAN FERNANDO VALLEY (AREA 1) (Continued) **1000709322**

Completed Sub Area Name: Not reported
Completed Document Type: Monitoring Report
Completed Date: 07/08/2008
Comments: Not reported

Completed Area Name: PROJECT WIDE
Completed Sub Area Name: Not reported
Completed Document Type: Feasibility Study Report
Completed Date: 01/08/2009
Comments: DTSCs letter with comments on Focussed Feasibility Study document for North Hollywood Operable Unit, San Fernando Valley Area 1 was sent out.

Completed Area Name: PROJECT WIDE
Completed Sub Area Name: Not reported
Completed Document Type: Record of Decision - Interim
Completed Date: 09/28/2009
Comments: Not reported

Completed Area Name: PROJECT WIDE
Completed Sub Area Name: Not reported
Completed Document Type: Consent Order
Completed Date: 06/24/1997
Comments: A second partial Consent Decree, dated June 24, 1997, requires reimbursement to the State by Lockheed-Martin of certain past costs and annual billing for future site specific response costs.

Completed Area Name: PROJECT WIDE
Completed Sub Area Name: Not reported
Completed Document Type: Consent Order
Completed Date: 05/14/1997
Comments: The second partial consent decree to recover DTSC's past cost is signed on May 14, 1997. This also concludes the litigation for the interim remedy at the North Hollywood OU.

Completed Area Name: PROJECT WIDE
Completed Sub Area Name: Not reported
Completed Document Type: Consent Order
Completed Date: 08/01/1996
Comments: The first partial consent decree is entered by the Federal District court on August 1, 1996.

Future Area Name: Not reported
Future Sub Area Name: Not reported
Future Document Type: Not reported
Future Due Date: Not reported
Schedule Area Name: Not reported
Schedule Sub Area Name: Not reported
Schedule Document Type: Not reported
Schedule Due Date: Not reported
Schedule Revised Date: Not reported

PRP:
PRP name: 2L SCREEN PRINTING CO.
A-H PLATING, INC.
ACCESSORY PLATING
ADLER SCREW PRODUCTS INC.

SAN FERNANDO VALLEY (AREA 1) (Continued) **1000709322**

AEROQUIP CORP.
AEROQUIP CORP.
AIRPORT GROUP INTERNATIONAL, INC.
AIRPORT GROUP INTERNATIONAL, INC.
ALLIED SIGNAL
ALLIED SIGNAL
ANTONINI FAMILY TRUST
B.J. GRINDING
BARRON ANODIZING
BASINGER B TRUST
BASINGER C TRUST
BENDIX CORP.
BENDIX CORP.
CALIFORNIA CAR HIKERS SERVICES, INC.
CALMAT CO.
CALMAT CO.
CALMAT CO.
CALMAT CO.
CEBALLOS, MR. CHUCK
CHASE, STUART
COOKE FAMILY TRUST (AMENDED)
COOKE FAMILY TRUST (AMENDED)
COOKE FAMILY TRUST (AMENDED)
CRANE COMPANY/HYDRO-AIRE DIVISION
CRANE COMPANY/HYDRO-AIRE DIVISION
DE KING SCREW PRODUCTS
DELTRON ENGINEERING
DYNAMIC PLATING, INC.
ELLISON, LEON
ERIK AND ELSE BRUUN-ANDERSEN TRUST
ERIK AND ELSE BRUUN-ANDERSEN TRUST
FLEETWOOD MACHINE PRODUCTS, INC.
FLEETWOOD MACHINE PRODUCTS, INC.
FLEETWOOD MACHINE PRODUCTS, INC.
FRANK GUERRORO
HASKEL, INC.
HAWKER PACIFIC CORPORATION
HAWKER PACIFIC CORPORATION
HAWKER PACIFIC CORPORATION
HAYWARD ASSOC, LLC
HONEYWELL INTERNATIONAL, INC.
HONEYWELL INTERNATIONAL, INC.
HONEYWELL INTERNATIONAL, INC.
HONEYWELL INTERNATIONAL, INC.
JANCO CORPORATION
JANCO CORPORATION
JOHNSON, CHAD
KAHR BEARING
KAHR BEARING
LA AGCO SALES
LAWRENCE ENGINEERING AND SUPPLY CO.
LOCKHEED AERONAUTICAL SYSTEMS
LOCKHEED AERONAUTICAL SYSTEMS
LOCKHEED AERONAUTICAL SYSTEMS
LOCKHEED AERONAUTICAL SYSTEMS
LOCKHEED AERONAUTICAL SYSTEMS

SAN FERNANDO VALLEY (AREA 1) (Continued) **1000709322**

Click this hyperlink while viewing on your computer to access
45 additional PRP: record(s) in the EDR Site Report.

A1 **H HAGHIGHI/M JAHANGIR** **HIST UST** **U001567671**
14761 DEVONSHIRE ST **N/A**
< 1/8 **MISSION HILLS, CA 91345**
1 ft.

Site 1 of 9 in cluster A

Relative:
Lower

Actual:
920 ft.

HIST UST:

Region:	STATE
Facility ID:	00000026581
Facility Type:	Gas Station
Other Type:	Not reported
Contact Name:	Not reported
Telephone:	0000000000
Owner Name:	ARCO PETROLEUM PRODUCTS CO.
Owner Address:	515 SOUTH FLOWER STREET
Owner City,St,Zip:	LOS ANGELES, CA 90071
Total Tanks:	0004
Tank Num:	001
Container Num:	0000000001
Year Installed:	1971
Tank Capacity:	00008000
Tank Used for:	PRODUCT
Type of Fuel:	06
Container Construction Thickness:	0000240
Leak Detection:	Stock Inventor, 10
Tank Num:	002
Container Num:	0000000002
Year Installed:	1971
Tank Capacity:	00008000
Tank Used for:	PRODUCT
Type of Fuel:	06
Container Construction Thickness:	0000240
Leak Detection:	Stock Inventor, 10
Tank Num:	003
Container Num:	0000000003
Year Installed:	1971
Tank Capacity:	00006000
Tank Used for:	PRODUCT
Type of Fuel:	06
Container Construction Thickness:	0000240
Leak Detection:	Stock Inventor, 10
Tank Num:	004
Container Num:	0000000004
Year Installed:	1983
Tank Capacity:	00012000
Tank Used for:	PRODUCT
Type of Fuel:	06
Container Construction Thickness:	Not reported
Leak Detection:	Stock Inventor, 10

A2 **ERNS** **91210353**
N/A

< 1/8
1 ft.

ARCO #1575 14761 DEVONSHIRE
MISSION HILLS, CA 91345

Site 2 of 9 in cluster A

Relative:
Lower

Actual:
920 ft.

Click this hyperlink while viewing on your computer to access additional ERNS detail in the EDR Site Report.

A3 **CA FID UST** **S101583292**
N/A

< 1/8
1 ft.

FAZELRAHMAN TAJAR/ATA. U RAHMA
14761 DEVONSHIRE ST
MISSION HILLS, CA 91345

Site 3 of 9 in cluster A

Relative:
Lower

Actual:
920 ft.

CA FID UST:

Facility ID:	19003280
Regulated By:	UTNKA
Regulated ID:	00026581
Cortese Code:	Not reported
SIC Code:	Not reported
Facility Phone:	8183659569
Mail To:	Not reported
Mailing Address:	515 S FLOWER ST
Mailing Address 2:	Not reported
Mailing City,St,Zip:	MISSION HILLS 913450000
Contact:	Not reported
Contact Phone:	Not reported
DUNs Number:	Not reported
NPDES Number:	Not reported
EPA ID:	Not reported
Comments:	Not reported
Status:	Active

B4 **HAZNET** **S117306748**
N/A

< 1/8
1 ft.

CLARITA CAPELLINI
14670 SAN JOSE ST
MISSION HILLS, CA 91345

Site 1 of 2 in cluster B

Relative:
Higher

Actual:
934 ft.

HAZNET:

envid:	S117306748
Year:	2013
GEPAID:	CAC002752036
Contact:	CLARITA CAPELLINI
Telephone:	8188975115
Mailing Name:	Not reported
Mailing Address:	14670 SAN JOSE ST
Mailing City,St,Zip:	MISSION HILLS, CA 913452250
Gen County:	Los Angeles
TSD EPA ID:	AZC950823111
TSD County:	99
Waste Category:	Not reported
Disposal Method:	Landfill Or Surface Impoundment That Will Be Closed As Landfill(To Include On-Site Treatment And/Or Stabilization)
Tons:	0.4
Facility County:	Not reported

B5 **ERNS** **2005604198**
N/A

< 1/8
1 ft.

14661 SAN JOSE
MISSION HILLS, CA 91345

Site 2 of 2 in cluster B

Relative:
Higher

Click this hyperlink while viewing on your computer to access additional ERNS detail in the EDR Site Report.

Actual:
934 ft.

A6 **ARCO FACILITY NO. 1575** **HIST CORTESE** **S103631321**
14761 DEVONSHIRE **LUST** **N/A**
MISSION HILLS, CA 91345

< 1/8
1 ft.

Site 4 of 9 in cluster A

Relative:
Lower

Actual:
920 ft.

HIST CORTESE:

Region:	CORTESE
Facility County Code:	19
Reg By:	LTNKA
Reg Id:	913450370

LUST:

Region:	STATE
Global Id:	T0603717009
Latitude:	34.257505
Longitude:	-118.453844
Case Type:	LUST Cleanup Site
Status:	Completed - Case Closed
Status Date:	06/07/2004
Lead Agency:	LOS ANGELES, CITY OF
Case Worker:	PK
Local Agency:	LOS ANGELES, CITY OF
RB Case Number:	Not reported
LOC Case Number:	15573
File Location:	Not reported
Potential Media Affect:	Soil
Potential Contaminants of Concern:	Gasoline
Site History:	Not reported

Click here to access the California GeoTracker records for this facility:

Contact:

Global Id:	T0603717009
Contact Type:	Local Agency Caseworker
Contact Name:	PATRICK KILLIAN
Organization Name:	LOS ANGELES, CITY OF
Address:	221 N FIGUEROA ST STE 1500
City:	LOS ANGELES
Email:	Not reported
Phone Number:	2134826527

Global Id:	T0603717009
Contact Type:	Regional Board Caseworker
Contact Name:	YI LU
Organization Name:	LOS ANGELES RWQCB (REGION 4)
Address:	Not reported
City:	R4 UNKNOWN
Email:	ylu@waterboards.ca.gov
Phone Number:	Not reported

ARCO FACILITY NO. 1575 (Continued) **S103631321**

Status History:

Global Id:	T0603717009
Status:	Completed - Case Closed
Status Date:	06/07/2004
Global Id:	T0603717009
Status:	Open - Site Assessment
Status Date:	02/02/2004
Global Id:	T0603717009
Status:	Open - Case Begin Date
Status Date:	12/20/2000

Regulatory Activities:

Global Id:	T0603717009
Action Type:	Other
Date:	12/20/2000
Action:	Leak Discovery
Global Id:	T0603717009
Action Type:	Other
Date:	01/01/2001
Action:	Leak Reported
Global Id:	T0603717009
Action Type:	Other
Date:	12/20/2000
Action:	Leak Stopped
Global Id:	T0603717009
Action Type:	REMEDIATION
Date:	12/20/2000
Action:	Not reported

Region:	STATE
Global Id:	T0603702304
Latitude:	34.257504
Longitude:	-118.453844
Case Type:	LUST Cleanup Site
Status:	Completed - Case Closed
Status Date:	04/04/1996
Lead Agency:	LOS ANGELES, CITY OF
Case Worker:	EL
Local Agency:	LOS ANGELES, CITY OF
RB Case Number:	913450370
LOC Case Number:	Not reported
File Location:	Not reported
Potential Media Affect:	Soil
Potential Contaminants of Concern:	Gasoline
Site History:	Not reported

Click here to access the California GeoTracker records for this facility:

Contact:

Global Id:	T0603702304
Contact Type:	Regional Board Caseworker

ARCO FACILITY NO. 1575 (Continued) **S103631321**

Contact Name: YUE RONG
Organization Name: LOS ANGELES RWQCB (REGION 4)
Address: 320 W. 4TH ST., SUITE 200
City: Los Angeles
Email: yrong@waterboards.ca.gov
Phone Number: Not reported

Global Id: T0603702304
Contact Type: Local Agency Caseworker
Contact Name: ELOY LUNA
Organization Name: LOS ANGELES, CITY OF
Address: 200 North Main Street, Suite 1780
City: LOS ANGELES
Email: eloy.luna@lacity.org
Phone Number: Not reported

Status History:
Global Id: T0603702304
Status: Completed - Case Closed
Status Date: 04/04/1996

Global Id: T0603702304
Status: Open - Case Begin Date
Status Date: 03/27/1991

Global Id: T0603702304
Status: Open - Site Assessment
Status Date: 03/28/1991

Regulatory Activities:
Global Id: T0603702304
Action Type: Other
Date: 03/27/1991
Action: Leak Discovery

Global Id: T0603702304
Action Type: Other
Date: 03/28/1991
Action: Leak Reported

LUST REG 4:
Region: 4
Regional Board: 04
County: Los Angeles
Facility Id: Not reported
Status: Not reported
Substance: Gasoline
Substance Quantity: Not reported
Local Case No: 15573
Case Type: Soil
Abatement Method Used at the Site: Not reported
Global ID: T0603717009
W Global ID: Not reported
Staff: UNK
Local Agency: 19050

ARCO FACILITY NO. 1575 (Continued) **S103631321**

Cross Street:	WOODMAN	
Enforcement Type:	Not reported	
Date Leak Discovered:	12/20/2000	
Date Leak First Reported:		1/1/2001
Date Leak Record Entered:	Not reported	
Date Confirmation Began:	Not reported	
Date Leak Stopped:	12/20/2000	
Date Case Last Changed on Database:		Not reported
Date the Case was Closed:		Not reported
How Leak Discovered:	OM	
How Leak Stopped:	NPP	
Cause of Leak:	UNK	
Leak Source:	Piping	
Operator:	Not reported	
Water System:	Not reported	
Well Name:	Not reported	
Approx. Dist To Production Well (ft):		Not reported
Source of Cleanup Funding:		Piping
Preliminary Site Assessment Workplan Submitted:		Not reported
Preliminary Site Assessment Began:		Not reported
Pollution Characterization Began:		Not reported
Remediation Plan Submitted:		Not reported
Remedial Action Underway:		Not reported
Post Remedial Action Monitoring Began:		Not reported
Enforcement Action Date:		Not reported
Historical Max MTBE Date:		Not reported
Hist Max MTBE Conc in Groundwater:		Not reported
Hist Max MTBE Conc in Soil:		.074
Significant Interim Remedial Action Taken:		Not reported
GW Qualifier:	Not reported	
Soil Qualifier:	=	
Organization:	Not reported	
Owner Contact:	Not reported	
Responsible Party:	SLAYMAN	
RP Address:	FOUR CENTERPOINTE DRIVE, LPR4-460	
Program:	LUST	
Lat/Long:	0 / 0	
Local Agency Staff:	Not reported	
Beneficial Use:	Not reported	
Priority:	Not reported	
Cleanup Fund Id:	Not reported	
Suspended:	Not reported	
Assigned Name:	Not reported	
Summary:	Not reported	

A7 **ARCO SERVICE STATION 1575** **UST** **U003781193**
14761 DEVONSHIRE ST **N/A**
< 1/8 **MISSION HILLS, CA 91345**
1 ft.

Site 5 of 9 in cluster A

Relative:
Lower

Actual:
920 ft.

UST:

Facility ID:	24847
Permitting Agency:	LOS ANGELES, CITY OF
Latitude:	34.258854
Longitude:	-118.452493

A8 **ARCO FACILITY #1575** **LUST** **S101297516**
14761 DEVONSHIRE ST **SWEEPS UST** **N/A**
< 1/8 **MISSION HILLS, CA 91345**
1 ft.

Site 6 of 9 in cluster A

Relative:
Lower

Actual:
920 ft.

LUST REG 4:

Region:	4	
Regional Board:	04	
County:	Los Angeles	
Facility Id:	913450370	
Status:	Preliminary site assessment underway	
Substance:	Gasoline	
Substance Quantity:	Not reported	
Local Case No:	Not reported	
Case Type:	Soil	
Abatement Method Used at the Site:		Not reported
Global ID:	T0603702304	
W Global ID:	W0602903312	
Staff:	UNK	
Local Agency:	19050	
Cross Street:	MASON	
Enforcement Type:	Not reported	
Date Leak Discovered:	3/27/1991	
Date Leak First Reported:		3/28/1991
Date Leak Record Entered:	12/11/1991	
Date Confirmation Began:	Not reported	
Date Leak Stopped:	Not reported	
Date Case Last Changed on Database:		12/13/1991
Date the Case was Closed:		Not reported
How Leak Discovered:	OM	
How Leak Stopped:	Not reported	
Cause of Leak:	UNK	
Leak Source:	UNK	
Operator:	OLD CASENO WAS 016223	
Water System:	WILDMAN MUTUAL WATER COMPANY	
Well Name:	Not reported	
Approx. Dist To Production Well (ft):		10782.822308810943326340557585
Source of Cleanup Funding:		UNK
Preliminary Site Assessment Workplan Submitted:		Not reported
Preliminary Site Assessment Began:		3/28/1991
Pollution Characterization Began:		Not reported
Remediation Plan Submitted:		Not reported
Remedial Action Underway:		Not reported
Post Remedial Action Monitoring Began:		Not reported
Enforcement Action Date:		Not reported
Historical Max MTBE Date:		Not reported
Hist Max MTBE Conc in Groundwater:		Not reported
Hist Max MTBE Conc in Soil:		Not reported
Significant Interim Remedial Action Taken:		Not reported
GW Qualifier:	Not reported	
Soil Qualifier:	Not reported	
Organization:	Not reported	
Owner Contact:	Not reported	
Responsible Party:	ARCO PRODUCTS CO.	
RP Address:	17315 STUDEBAKER RD, CERRITOS, 90701	
Program:	LUST	
Lat/Long:	34.2573667 / -1	
Local Agency Staff:	PEJ	

ARCO FACILITY #1575 (Continued) **S101297516**

Beneficial Use: Not reported
Priority: Not reported
Cleanup Fund Id: Not reported
Suspended: Not reported
Assigned Name: 1503312-001
Summary: INVESTIGATION OF CONDITONS AND EVENTS WHICH GENERATED THIS REPORT.

SWEEPS UST:
Status: Not reported
Comp Number: 1587
Number: Not reported
Board Of Equalization: 44-011875
Referral Date: Not reported
Action Date: Not reported
Created Date: Not reported
Owner Tank Id: Not reported
SWRCB Tank Id: 19-050-001587-000001
Tank Status: Not reported
Capacity: 8000
Active Date: Not reported
Tank Use: M.V. FUEL
STG: PRODUCT
Content: REG UNLEADED
Number Of Tanks: 4

Status: Not reported
Comp Number: 1587
Number: Not reported
Board Of Equalization: 44-011875
Referral Date: Not reported
Action Date: Not reported
Created Date: Not reported
Owner Tank Id: Not reported
SWRCB Tank Id: 19-050-001587-000002
Tank Status: Not reported
Capacity: 8000
Active Date: Not reported
Tank Use: M.V. FUEL
STG: PRODUCT
Content: REG UNLEADED
Number Of Tanks: Not reported

Status: Not reported
Comp Number: 1587
Number: Not reported
Board Of Equalization: 44-011875
Referral Date: Not reported
Action Date: Not reported
Created Date: Not reported
Owner Tank Id: Not reported
SWRCB Tank Id: 19-050-001587-000003
Tank Status: Not reported
Capacity: 6000
Active Date: Not reported
Tank Use: M.V. FUEL
STG: PRODUCT
Content: REG UNLEADED

ARCO FACILITY #1575 (Continued) **S101297516**

Number Of Tanks: Not reported

Status: Not reported
Comp Number: 1587
Number: Not reported
Board Of Equalization: 44-011875
Referral Date: Not reported
Action Date: Not reported
Created Date: Not reported
Owner Tank Id: Not reported
SWRCB Tank Id: 19-050-001587-000004
Tank Status: Not reported
Capacity: 12000
Active Date: Not reported
Tank Use: CHEMICAL
STG: PRODUCT
Content: UNKNOWN
Number Of Tanks: Not reported

Status: Active
Comp Number: 1587
Number: 1
Board Of Equalization: 44-011875
Referral Date: 03-24-93
Action Date: 03-17-94
Created Date: 02-29-88
Owner Tank Id: 1587
SWRCB Tank Id: 19-050-001587-000005
Tank Status: A
Capacity: 10000
Active Date: 03-24-93
Tank Use: M.V. FUEL
STG: P
Content: LEADED
Number Of Tanks: 4

Status: Active
Comp Number: 1587
Number: 1
Board Of Equalization: 44-011875
Referral Date: 03-24-93
Action Date: 03-17-94
Created Date: 02-29-88
Owner Tank Id: 1587-2
SWRCB Tank Id: 19-050-001587-000006
Tank Status: A
Capacity: 10000
Active Date: 03-24-93
Tank Use: M.V. FUEL
STG: P
Content: REG UNLEADED
Number Of Tanks: Not reported

Status: Active
Comp Number: 1587
Number: 1
Board Of Equalization: 44-011875

ARCO FACILITY #1575 (Continued) **S101297516**

Referral Date:	03-24-93
Action Date:	03-17-94
Created Date:	02-29-88
Owner Tank Id:	1587-3
SWRCB Tank Id:	19-050-001587-000007
Tank Status:	A
Capacity:	10000
Active Date:	03-24-93
Tank Use:	M.V. FUEL
STG:	P
Content:	REG UNLEADED
Number Of Tanks:	Not reported

Status:	Active
Comp Number:	1587
Number:	1
Board Of Equalization:	44-011875
Referral Date:	03-24-93
Action Date:	03-17-94
Created Date:	02-29-88
Owner Tank Id:	1587-4
SWRCB Tank Id:	19-050-001587-000008
Tank Status:	A
Capacity:	10000
Active Date:	03-24-93
Tank Use:	M.V. FUEL
STG:	P
Content:	PRM UNLEADED
Number Of Tanks:	Not reported

A9 **ERNS** **96496440**
N/A

< 1/8
1 ft.

14761 DEVONSHIRE
MISSION HILLS, CA

Site 7 of 9 in cluster A

Relative:
Lower

Click this hyperlink while viewing on your computer to access additional ERNS detail in the EDR Site Report.

Actual:
920 ft.

C10 **LOS ANGELES COUNTY/PUBL WORKS** **HAZNET** **S113461342**
N/A

< 1/8
1 ft.

10450 ARLETA AVE
PACOIMA, CA 91331

Site 1 of 5 in cluster C

Relative:
Higher

Actual:
955 ft.

HAZNET:

envid:	S113461342
Year:	2010
GEPAID:	CAC002655294
Contact:	GARY SANDERSON
Telephone:	6264581762
Mailing Name:	Not reported
Mailing Address:	PO BOX 1460
Mailing City,St,Zip:	ALHAMBRA, CA 918021460
Gen County:	Not reported
TSD EPA ID:	CAD028409019
TSD County:	Not reported

LOS ANGELES COUNTY/PUBL WORKS (Continued) **S113461342**

Waste Category: Other inorganic solid waste
Disposal Method: Storage, Bulking, And/Or Transfer Off Site--No Treatment/Reovery (H010-H129) Or (H131-H135)
Tons: 0.075
Facility County: Los Angeles

C11 **PACOIMA WASH - PACOIMA SPREADI** **HIST UST** **U001567443**
10450 ARLETA **N/A**
< 1/8 **PACOIMA, CA 91331**
1 ft.

Site 2 of 5 in cluster C

Relative: Higher

Actual: 955 ft.

HIST UST:
Region: STATE
Facility ID: 00000034031
Facility Type: Other
Other Type: SPREADING GROUNDS
Contact Name: Not reported
Telephone: 8188960594
Owner Name: LOS ANGELES COUNTY FLOOD CONTR
Owner Address: 2250 ALCAZAR STREET
Owner City,St,Zip: LOS ANGELES, CA 90033
Total Tanks: 0001

Tank Num: 001
Container Num: 1
Year Installed: Not reported
Tank Capacity: 00000250
Tank Used for: PRODUCT
Type of Fuel: REGULAR
Container Construction Thickness: Not reported
Leak Detection: None

---

12 **CHEVRON U.S.A. INC.** **UIC** **S111628532**
N/A
< 1/8 **LOS ANGELES (County), CA**
1 ft.

Relative: Higher

Actual: 923 ft.

UIC:
API Number: 03721869
Confidential Well: No
Well Number: 2
Direction: Directionally drilled
Lease Name: Burnet C.H.
Well Located On A BLW Lease: No
Field Name: Any Field
Area Name: Any Area
Section: 16
Township: 02N
Range: 15W
Base And Meridian; Part Of The PLSS: SB
Elevation: Not reported
Location Desc: Not reported
GIS Source Code: hud
Comments: Not reported
Latitude: 34.25880

CHEVRON U.S.A. INC. (Continued) **S111628532**

Longitude: -118.4545

---

13 **NELLIE LOYA** **HAZNET** **S117295223**
14626 HIAWATHA ST. **N/A**
< 1/8 **MISSION HILLS, CA 91345**
1 ft.

Relative:
Higher

Actual:
930 ft.

HAZNET:

envid:	S117295223
Year:	2013
GEPAID:	CAC002735293
Contact:	NELLIE LOYA
Telephone:	3104877772
Mailing Name:	Not reported
Mailing Address:	14626 HIAWATHA ST.
Mailing City,St,Zip:	MISSION HILLS, CA 91345
Gen County:	Los Angeles
TSD EPA ID:	AZC950823111
TSD County:	99
Waste Category:	Not reported
Disposal Method:	Landfill Or Surface Impoundment That Will Be Closed As Landfill(To Include On-Site Treatment And/Or Stabilization)
Tons:	0.4
Facility County:	Not reported

A14 **CHEVRON U.S.A. INC.** **UIC** **S111628487**
N/A

< 1/8 **LOS ANGELES (County), CA**
1 ft.

Site 8 of 9 in cluster A

Relative:
Lower

Actual:
920 ft.

UIC:

API Number:	03721802
Confidential Well:	No
Well Number:	1
Direction:	Directionally drilled
Lease Name:	Burnet C.H.
Well Located On A BLW Lease:	No
Field Name:	Any Field
Area Name:	Any Area
Section:	16
Township:	02N
Range:	15W
Base And Meridian; Part Of The PLSS:	SB
Elevation:	Not reported
Location Desc:	Not reported
GIS Source Code:	hud
Comments:	Not reported
Latitude:	34.25771
Longitude:	-118.4548

C15 **LA CO DPW FMD PACOIMA SG** **LOS ANGELES CO. HMS** **S109690586**
10450 ARLETA AVE **N/A**
< 1/8 **LOS ANGELES, CA**
1 ft.

Site 3 of 5 in cluster C

Relative:
Higher

Actual:
955 ft.

LOS ANGELES CO. HMS:

Region:	LA
Facility Id:	010783-052770
Facility Type:	Not reported
Facility Status:	OPEN
Area:	5F
Permit Number:	Not reported
Permit Status:	Not reported

---

16 **EDR US Hist Cleaners** **1014968007**
10100 WOODMAN AVE **N/A**
< 1/8 **MISSION HILLS, CA 91345**
1 ft.

Relative:
Lower

Actual:
912 ft.

EDR Historical Cleaners:

Name:	BETTY CLEANERS
Year:	2005
Address:	10100 WOODMAN AVE

---

17 **CHEVRON SERVICE** **EDR US Hist Auto Stat** **1008994879**
14800 DEVONSHIRE **N/A**
< 1/8 **MISSION HILLS, CA 91345**
1 ft.

Relative:
Lower

Actual:
918 ft.

EDR Historical Auto Stations:

Name:	CHEVRON SERVICE
Year:	1970
Type:	Not reported
Name:	CHEVRON SERVICE
Year:	1970
Type:	Not reported

C18 **PACOIMA WASH - PACOIMA SPREADI** **CA FID UST** **S101618425**
10450 ARLETA AVE **SWEEPS UST** **N/A**
< 1/8 **PACOIMA, CA 91331**
1 ft.

Site 4 of 5 in cluster C

Relative:
Higher

Actual:
955 ft.

CA FID UST:

Facility ID:	19006883
Regulated By:	UTNKI
Regulated ID:	00034031
Cortese Code:	Not reported
SIC Code:	Not reported
Facility Phone:	8188960594
Mail To:	Not reported
Mailing Address:	2250 ALCAZAR ST
Mailing Address 2:	Not reported
Mailing City,St,Zip:	PACOIMA 913310000
Contact:	Not reported

PACOIMA WASH - PACOIMA SPREADI (Continued) **S101618425**

Contact Phone: Not reported
DUNs Number: Not reported
NPDES Number: Not reported
EPA ID: Not reported
Comments: Not reported
Status: Inactive

SWEEPS UST:
Status: Not reported
Comp Number: 1916
Number: Not reported
Board Of Equalization: 44-012068
Referral Date: Not reported
Action Date: Not reported
Created Date: Not reported
Owner Tank Id: Not reported
SWRCB Tank Id: 19-050-001916-000001
Tank Status: Not reported
Capacity: 250
Active Date: Not reported
Tank Use: M.V. FUEL
STG: PRODUCT
Content: REG UNLEADED
Number Of Tanks: 1

A19 **EDR US Hist Auto Stat** **1008994880**
N/A

< 1/8
1 ft.

14805 DEVONSHIRE ST
MISSION HILLS, CA 91345

Site 9 of 9 in cluster A

Relative:
Lower

Actual:
919 ft.

EDR Historical Auto Stations:
Name: PHILIPS 66 SERVICE
Year: 1970
Type: Not reported

Name: MISSION HILLS AUTO REPAIR & SALES
Year: 1999
Address: 14805 DEVONSHIRE ST

Name: MISSION HILLS AUTO RPR & SALES
Year: 2002
Address: 14805 DEVONSHIRE ST

Name: MISSION HILLS AUTO RPR & SALES
Year: 2003
Address: 14805 DEVONSHIRE ST

Name: MISSION HILLS AUTO RPR & SALES
Year: 2004
Address: 14805 DEVONSHIRE ST

Name: MISSION HILLS AUTO REPAIR & SALES
Year: 2005
Address: 14805 DEVONSHIRE ST

Name: MISSION HILLS AUTO REPAIR & SALES

(Continued) **1008994880**

Year: 2006
Address: 14805 DEVONSHIRE ST

Name: MISSION HILLS AUTO REPAIR & SALES
Year: 2007
Address: 14805 DEVONSHIRE ST

Name: MISSION HILLS AUTO REPAIR & SALES
Year: 2008
Address: 14805 DEVONSHIRE ST

Name: MISSION HILLS AUTO REPAIR & SALES
Year: 2009
Address: 14805 DEVONSHIRE ST

Name: MISSION HILLS AUTO REPAIR
Year: 2010
Address: 14805 DEVONSHIRE ST

Name: MISSION HILLS AUTO REPAIR
Year: 2011
Address: 14805 DEVONSHIRE ST

Name: MOH AUTOMOTIVE CORP INC
Year: 2012
Address: 14805 DEVONSHIRE ST

---

20 **MITCHELL MARCIALES** **HAZNET** **S112986768**
10541 LEV AVE **N/A**
< 1/8 **MISSION HILLS, CA 91345**
1 ft.

Relative: Higher

Actual: 953 ft.

HAZNET:
envid: S112986768
Year: 2011
GEPAID: CAC002667320
Contact: MITCHELL MARCIALES
Telephone: 6613333877
Mailing Name: Not reported
Mailing Address: 10541 LEV AVE
Mailing City,St,Zip: MISSION HILLS, CA 913452310
Gen County: Not reported
TSD EPA ID: AZC950823111
TSD County: Not reported
Waste Category: Asbestos containing waste
Disposal Method: Landfill Or Surface Impoundment That Will Be Closed As Landfill(To Include On-Site Treatment And/Or Stabilization)
Tons: 0.4
Facility County: Los Angeles

envid: S112986768
Year: 2011
GEPAID: CAC002667320
Contact: MITCHELL MARCIALES
Telephone: 6613333877
Mailing Name: Not reported
Mailing Address: 10541 LEV AVE
Mailing City,St,Zip: MISSION HILLS, CA 913452310

MITCHELL MARCIALES (Continued) **S112986768**

Gen County: Not reported
TSD EPA ID: AZC950823111
TSD County: Not reported
Waste Category: Asbestos containing waste
Disposal Method: Landfill Or Surface Impoundment That Will Be Closed As Landfill(To Include On-Site Treatment And/Or Stabilization)
Tons: 0.4
Facility County: Los Angeles

D21 **ARCO PRODUCTS FACILITY 1575** **HAZNET** **S113027859**
14761 DEVONSHIRE **N/A**
< 1/8 **MISSION HILLS, CA 91345**
1 ft.

Site 1 of 6 in cluster D

Relative:
Lower

Actual:
921 ft.

HAZNET:
envid: S113027859
Year: 2007
GEPAID: CAL000017748
Contact: ACTIVE PER SURVEY 12/94 AD
Telephone: --
Mailing Name: Not reported
Mailing Address: 515 S FLOWER ST # AP-1816
Mailing City,St,Zip: LOS ANGELES, CA 900712201
Gen County: Not reported
TSD EPA ID: AZR000501510
TSD County: Not reported
Waste Category: Other organic solids
Disposal Method: Storage, Bulking, And/Or Transfer Off Site--No Treatment/Reovery (H010-H129) Or (H131-H135)
Tons: 0.1
Facility County: Los Angeles

envid: S113027859
Year: 2006
GEPAID: CAL000017748
Contact: ACTIVE PER SURVEY 12/94 AD
Telephone: --
Mailing Name: Not reported
Mailing Address: 515 S FLOWER ST # AP-1816
Mailing City,St,Zip: LOS ANGELES, CA 900712201
Gen County: Not reported
TSD EPA ID: AZR000501510
TSD County: Not reported
Waste Category: Other organic solids
Disposal Method: Storage, Bulking, And/Or Transfer Off Site--No Treatment/Reovery (H010-H129) Or (H131-H135)
Tons: 0.25
Facility County: Los Angeles

envid: S113027859
Year: 2004
GEPAID: CAL000017748
Contact: ACTIVE PER SURVEY 12/94 AD
Telephone: --
Mailing Name: Not reported
Mailing Address: 515 S FLOWER ST # AP-1816
Mailing City,St,Zip: LOS ANGELES, CA 900712201

ARCO PRODUCTS FACILITY 1575 (Continued) **S113027859**

Gen County:	Not reported
TSD EPA ID:	CAT080033681
TSD County:	Not reported
Waste Category:	Other organic solids
Disposal Method:	Disposal, Land Fill
Tons:	0.07
Facility County:	Los Angeles

envid:	S113027859
Year:	1996
GEPAID:	CAL000017748
Contact:	ARCO PRODUCTS COMPANY
Telephone:	0000000000
Mailing Name:	Not reported
Mailing Address:	515 S FLOWER ST # AP-1816
Mailing City,St,Zip:	LOS ANGELES, CA 900712201
Gen County:	Not reported
TSD EPA ID:	CAD000088252
TSD County:	Not reported
Waste Category:	Other organic solids
Disposal Method:	Transfer Station
Tons:	.1000
Facility County:	Los Angeles

C22 **LA CO DPW FMD PACOIMA SG** **LOS ANGELES CO. HMS** **S102061800**
10450 ARLETA AVE **N/A**
< 1/8 **LOS ANGELES, CA**
1 ft.

Site 5 of 5 in cluster C

Relative: Higher

Actual: 955 ft.

LOS ANGELES CO. HMS:

Region:	LA
Facility Id:	010783-010743
Facility Type:	Not reported
Facility Status:	OPEN
Area:	5F
Permit Number:	Not reported
Permit Status:	Not reported

D23 **ARCO #1575** **RGA LUST** **S114573420**
14761 DEVONSHIRE ST **N/A**
< 1/8 **MISSION HILLS, CA**
1 ft.

Site 2 of 6 in cluster D

Relative: Lower

Actual: 921 ft.

RGA LUST:

2012	ARCO #1575	14761 DEVONSHIRE ST
2011	ARCO #1575	14761 DEVONSHIRE ST
2010	ARCO #1575	14761 DEVONSHIRE ST
2009	ARCO #1575	14761 DEVONSHIRE ST
2008	ARCO #1575	14761 DEVONSHIRE ST
2007	ARCO #1575	14761 DEVONSHIRE ST
2006	ARCO #1575	14761 DEVONSHIRE ST
2005	ARCO #1575	14761 DEVONSHIRE ST
2003	ARCO #1575	14761 DEVONSHIRE ST
2002	ARCO #1575	14761 DEVONSHIRE ST

ARCO #1575 (Continued) **S114573420**

2001	ARCO #1575	14761 DEVONSHIRE ST
2000	ARCO #1575	14761 DEVONSHIRE ST
1998	ARCO #1575	14761 DEVONSHIRE ST
1997	ARCO #1575	14761 DEVONSHIRE ST
1996	ARCO #1575	14761 DEVONSHIRE ST
1995	ARCO #1575	14761 DEVONSHIRE ST

---

24 **MIKE MARR** **HAZNET** **S113163045**
14600 SAN JOSE **N/A**
< 1/8 **PACOIMA, CA 91345**
1 ft.

Relative:
Higher

Actual:
938 ft.

HAZNET:

envid:	S113163045
Year:	2006
GEPAID:	CAL912213918
Contact:	MIKE MARR
Telephone:	8188969238
Mailing Name:	Not reported
Mailing Address:	14600 SAN JOSE ST
Mailing City,St,Zip:	MISSION HILLS, CA 913452234
Gen County:	Not reported
TSD EPA ID:	CAT000613893
TSD County:	Not reported
Waste Category:	Unspecified organic liquid mixture
Disposal Method:	Recycler
Tons:	0.06
Facility County:	Los Angeles

envid:	S113163045
Year:	2002
GEPAID:	CAL912213918
Contact:	MIKE MARR
Telephone:	8188969238
Mailing Name:	Not reported
Mailing Address:	14600 SAN JOSE ST
Mailing City,St,Zip:	MISSION HILLS, CA 913452234
Gen County:	Not reported
TSD EPA ID:	CAT000613893
TSD County:	Not reported
Waste Category:	Unspecified organic liquid mixture
Disposal Method:	Transfer Station
Tons:	0.12
Facility County:	Los Angeles

envid:	S113163045
Year:	1999
GEPAID:	CAL912213918
Contact:	SITE
Telephone:	8188969238
Mailing Name:	Not reported
Mailing Address:	14600 SAN JOSE ST
Mailing City,St,Zip:	MISSION HILLS, CA 913452234
Gen County:	Not reported
TSD EPA ID:	CAT000613893
TSD County:	Not reported
Waste Category:	Unspecified organic liquid mixture
Disposal Method:	Transfer Station

MIKE MARR (Continued) **S113163045**

Tons:	.1251
Facility County:	Los Angeles

envid:	S113163045
Year:	1999
GEPAID:	CAL912213918
Contact:	SITE
Telephone:	8188969238
Mailing Name:	Not reported
Mailing Address:	14600 SAN JOSE ST
Mailing City,St,Zip:	MISSION HILLS, CA 913452234
Gen County:	Not reported
TSD EPA ID:	CAT000613893
TSD County:	Not reported
Waste Category:	Aqueous solution with total organic residues less than 10 percent
Disposal Method:	Transfer Station
Tons:	.1250
Facility County:	Los Angeles

envid:	S113163045
Year:	1998
GEPAID:	CAL912213918
Contact:	SITE
Telephone:	8188969238
Mailing Name:	Not reported
Mailing Address:	14600 SAN JOSE ST
Mailing City,St,Zip:	MISSION HILLS, CA 913452234
Gen County:	Not reported
TSD EPA ID:	CAT000613893
TSD County:	Not reported
Waste Category:	Unspecified organic liquid mixture
Disposal Method:	Transfer Station
Tons:	.1200
Facility County:	Los Angeles

Click this hyperlink while viewing on your computer to access
3 additional CA_HAZNET: record(s) in the EDR Site Report.

---

25 **EDR US Hist Auto Stat** **1015140769**
N/A

< 1/8
1 ft.

10540 ARLETA AVE
MISSION HILLS, CA 91345

Relative:
Higher

Actual:
951 ft.

EDR Historical Auto Stations:

Name:	POLISH MOTOR WORKS
Year:	2007
Address:	10540 ARLETA AVE

Name:	POLISH MOTOR WORKS
Year:	2009
Address:	10540 ARLETA AVE

26 **EDR US Hist Cleaners** **1014994343**
N/A

14512 SAN JOSE ST
MISSION HILLS, CA 91345

< 1/8
1 ft.

Relative:
Higher

Actual:
944 ft.

EDR Historical Cleaners:

Name:	JC WINDOW CLEANING SERVICE
Year:	2004
Address:	14512 SAN JOSE ST

D27 **ARCO PRODUCTS COMPANY** **HAZNET** **S113028927**
N/A

14761 DEVONSHIRE
MISSION HILLS, CA 91345

< 1/8
1 ft.

Site 3 of 6 in cluster D

Relative:
Lower

Actual:
921 ft.

HAZNET:

envid:	S113028927
Year:	2001
GEPAID:	CAL000020695
Contact:	CARLOS RODRIGUEZ/ENV COMPL ADM
Telephone:	7146705366
Mailing Name:	Not reported
Mailing Address:	PO BOX 6038
Mailing City,St,Zip:	ARTESIA, CA 907026038
Gen County:	Not reported
TSD EPA ID:	CAT080013352
TSD County:	Not reported
Waste Category:	Aqueous solution with total organic residues less than 10 percent
Disposal Method:	Recycler
Tons:	3.12
Facility County:	Los Angeles

envid:	S113028927
Year:	1996
GEPAID:	CAL000020695
Contact:	ATLANTIC RICHFIELD COMPANY
Telephone:	2134860494
Mailing Name:	Not reported
Mailing Address:	PO BOX 6038
Mailing City,St,Zip:	ARTESIA, CA 907026038
Gen County:	Not reported
TSD EPA ID:	CAT080013352
TSD County:	Not reported
Waste Category:	Aqueous solution with total organic residues less than 10 percent
Disposal Method:	Recycler
Tons:	.2293
Facility County:	Los Angeles

D28 **BP WEST COAST PRODUCTS LLC 01575** **HAZNET** **S113114056**
14761 DEVONSHIRE **N/A**
< 1/8 **MISSION HILLS, CA 91345**
1 ft.

Site 4 of 6 in cluster D

Relative:
Lower

Actual:
921 ft.

HAZNET:

envid:	S113114056
Year:	2012
GEPAID:	CAL000225682
Contact:	JACKIE DOUGHERTY
Telephone:	9497354632
Mailing Name:	Not reported
Mailing Address:	PO BOX 80249
Mailing City,St,Zip:	RCHO STA MARG, CA 926880000
Gen County:	Los Angeles
TSD EPA ID:	CAT080013352
TSD County:	Los Angeles
Waste Category:	Not reported
Disposal Method:	Other Recovery Of Reclamation For Reuse Including Acid Regeneration, Organics Recovery Ect
Tons:	0.021
Facility County:	Los Angeles

envid:	S113114056
Year:	2011
GEPAID:	CAL000225682
Contact:	WASTE SPECIALIST
Telephone:	5035246191
Mailing Name:	Not reported
Mailing Address:	PO BOX 80249
Mailing City,St,Zip:	RCHO STA MARG, CA 926880000
Gen County:	Not reported
TSD EPA ID:	CAT080013352
TSD County:	Not reported
Waste Category:	Aqueous solution with total organic residues less than 10 percent
Disposal Method:	Other Recovery Of Reclamation For Reuse Including Acid Regeneration, Organics Recovery Ect
Tons:	0.2436
Facility County:	Los Angeles

envid:	S113114056
Year:	2010
GEPAID:	CAL000225682
Contact:	JACKIE DOUGHERTY
Telephone:	9497354632
Mailing Name:	Not reported
Mailing Address:	PO BOX 80249
Mailing City,St,Zip:	RCHO STA MARG, CA 926880000
Gen County:	Not reported
TSD EPA ID:	CAT080013352
TSD County:	Not reported
Waste Category:	Aqueous solution with total organic residues less than 10 percent
Disposal Method:	Other Recovery Of Reclamation For Reuse Including Acid Regeneration, Organics Recovery Ect
Tons:	0.21
Facility County:	Los Angeles

envid: S113114056

BP WEST COAST PRODUCTS LLC 01575 (Continued) **S113114056**

Year:	2009
GEPAID:	CAL000225682
Contact:	Waste Specialist
Telephone:	5035246191
Mailing Name:	Not reported
Mailing Address:	PO BOX 80249
Mailing City,St,Zip:	RCHO STA MARG, CA 926880000
Gen County:	Not reported
TSD EPA ID:	CAT080013352
TSD County:	Not reported
Waste Category:	Aqueous solution with total organic residues less than 10 percent
Disposal Method:	Other Recovery Of Reclamation For Reuse Including Acid Regeneration, Organics Recovery Ect
Tons:	0.336
Facility County:	Los Angeles

envid:	S113114056
Year:	2008
GEPAID:	CAL000225682
Contact:	RUTH HA / WASTE SPECIALIST
Telephone:	5035246191
Mailing Name:	Not reported
Mailing Address:	PO BOX 80249
Mailing City,St,Zip:	RCHO STA MARG, CA 926880000
Gen County:	Not reported
TSD EPA ID:	NVT330010000
TSD County:	Not reported
Waste Category:	Other organic solids
Disposal Method:	Landfill Or Surface Impoundment That Will Be Closed As Landfill(To Include On-Site Treatment And/Or Stabilization)
Tons:	0.05
Facility County:	Los Angeles

Click this hyperlink while viewing on your computer to access
8 additional CA_HAZNET: record(s) in the EDR Site Report.

D29 **786 VENTURE INC** **HAZNET** **S113797305**
14761 DEVONSHIRE ST **N/A**
< 1/8 **MISSION HILLS, CA 91345**
1 ft.

Site 5 of 6 in cluster D

Relative:
Lower

Actual:
921 ft.

HAZNET:

envid:	S113797305
Year:	2012
GEPAID:	CAL000299416
Contact:	FAZELRAHMAN TAJYAR
Telephone:	8183659569
Mailing Name:	Not reported
Mailing Address:	14761 DEVONSHIRE ST
Mailing City,St,Zip:	MISSION HILLS, CA 913450000
Gen County:	Los Angeles
TSD EPA ID:	NVT330010000
TSD County:	99
Waste Category:	Not reported
Disposal Method:	Landfill Or Surface Impoundment That Will Be Closed As Landfill(To Include On-Site Treatment And/Or Stabilization)
Tons:	0.1

786 VENTURE INC (Continued) **S113797305**

Facility County: Los Angeles

D30 **EDR US Hist Auto Stat** **1015233300**
N/A

< 1/8
1 ft.

14761 DEVONSHIRE ST
MISSION HILLS, CA 91345

Site 6 of 6 in cluster D

Relative:
Lower

Actual:
921 ft.

EDR Historical Auto Stations:

Name: TAJYAR ARCO
Year: 1999
Address: 14761 DEVONSHIRE ST

Name: TAJYAR ARCO
Year: 2001
Address: 14761 DEVONSHIRE ST

Name: TAJYAR ARCO
Year: 2002
Address: 14761 DEVONSHIRE ST

Name: TAJYAR ARCO
Year: 2003
Address: 14761 DEVONSHIRE ST

Name: TAJYAR ARCO
Year: 2004
Address: 14761 DEVONSHIRE ST

Name: TAJYAR ARCO
Year: 2005
Address: 14761 DEVONSHIRE ST

Name: TAJYAR ARCO
Year: 2006
Address: 14761 DEVONSHIRE ST

Name: TAJYAR ARCO
Year: 2007
Address: 14761 DEVONSHIRE ST

Name: TAJYAR ARCO
Year: 2008
Address: 14761 DEVONSHIRE ST

Name: TAJYAR ARCO
Year: 2009
Address: 14761 DEVONSHIRE ST

Name: TAJYAR ARCO
Year: 2010
Address: 14761 DEVONSHIRE ST

Name: TAJYAR ARCO
Year: 2011
Address: 14761 DEVONSHIRE ST

Name: TAJYAR ARCO

(Continued) **1015233300**

Year: 2012
Address: 14761 DEVONSHIRE ST

---

31 NE < 1/8 0.021 mi. 110 ft. | **SOUTHERN CALIFORNIA GAS CO**
14201 PAXTON ST
PACOIMA, CA 91345 | **RCRA-SQG** | **1007091352**
CAR000148130

Relative: Higher

Actual: 958 ft.

RCRA-SQG:

Date form received by agency:	01/05/2010
Facility name:	SOUTHERN CALIFORNIA GAS CO
Facility address:	14201 PAXTON ST PACOIMA, CA 91345
EPA ID:	CAR000148130
Mailing address:	6875 CONSOLIDATED WAY SD 1373 SAN DIEGO, CA 92121-2602
Contact:	JAMES T SCRUGGS
Contact address:	6875 CONSOLIDATED WAY SD 1373 SAN DIEGO, CA 92121-2602
Contact country:	US
Contact telephone:	858-653-3104
Contact email:	JSCRUGGS@SEMPRAUTILITIES.COM
EPA Region:	09
Classification:	Small Small Quantity Generator
Description:	Handler: generates more than 100 and less than 1000 kg of hazardous waste during any calendar month and accumulates less than 6000 kg of hazardous waste at any time; or generates 100 kg or less of hazardous waste during any calendar month, and accumulates more than 1000 kg of hazardous waste at any time

Owner/Operator Summary:

Owner/operator name:	SOUTHERN CALIFORNIA GAS CO
Owner/operator address:	Not reported Not reported
Owner/operator country:	Not reported
Owner/operator telephone:	Not reported
Legal status:	Private
Owner/Operator Type:	Operator
Owner/Op start date:	04/01/2009
Owner/Op end date:	Not reported
Owner/operator name:	VINTAGE PRODUCTIONS
Owner/operator address:	9600 MING AVE STE 300 BAKERSFIELD, CA 93311
Owner/operator country:	US
Owner/operator telephone:	Not reported
Legal status:	Private
Owner/Operator Type:	Owner
Owner/Op start date:	03/10/2009
Owner/Op end date:	Not reported

Handler Activities Summary:

U.S. importer of hazardous waste:	No
Mixed waste (haz. and radioactive):	No
Recycler of hazardous waste:	No

SOUTHERN CALIFORNIA GAS CO (Continued) **1007091352**

Transporter of hazardous waste: No
Treater, storer or disposer of HW: No
Underground injection activity: No
On-site burner exemption: No
Furnace exemption: No
Used oil fuel burner: No
Used oil processor: No
User oil refiner: No
Used oil fuel marketer to burner: No
Used oil Specification marketer: No
Used oil transfer facility: No
Used oil transporter: No

Historical Generators:
Date form received by agency: 09/17/2003
Site name: SO CAL GAS CO BSI PAXTON 3908
Classification: Small Quantity Generator

Date form received by agency: 09/17/2003
Site name: SO CAL GAS CO BSI PAXTON 3908
Classification: Large Quantity Generator

Hazardous Waste Summary:
Waste code: D001
Waste name: IGNITABLE HAZARDOUS WASTES ARE THOSE WASTES WHICH HAVE A FLASHPOINT OF LESS THAN 140 DEGREES FAHRENHEIT AS DETERMINED BY A PENSKY-MARTENS CLOSED CUP FLASH POINT TESTER. ANOTHER METHOD OF DETERMINING THE FLASH POINT OF A WASTE IS TO REVIEW THE MATERIAL SAFETY DATA SHEET, WHICH CAN BE OBTAINED FROM THE MANUFACTURER OR DISTRIBUTOR OF THE MATERIAL. LACQUER THINNER IS AN EXAMPLE OF A COMMONLY USED SOLVENT WHICH WOULD BE CONSIDERED AS IGNITABLE HAZARDOUS WASTE.

Waste code: D001
Waste name: IGNITABLE HAZARDOUS WASTES ARE THOSE WASTES WHICH HAVE A FLASHPOINT OF LESS THAN 140 DEGREES FAHRENHEIT AS DETERMINED BY A PENSKY-MARTENS CLOSED CUP FLASH POINT TESTER. ANOTHER METHOD OF DETERMINING THE FLASH POINT OF A WASTE IS TO REVIEW THE MATERIAL SAFETY DATA SHEET, WHICH CAN BE OBTAINED FROM THE MANUFACTURER OR DISTRIBUTOR OF THE MATERIAL. LACQUER THINNER IS AN EXAMPLE OF A COMMONLY USED SOLVENT WHICH WOULD BE CONSIDERED AS IGNITABLE HAZARDOUS WASTE.

Violation Status: No violations found

---

32 **EDR US Hist Auto Stat** **1015140557**
NNW **10529 CEDROS AVE** **N/A**
< 1/8 **MISSION HILLS, CA 91345**
0.027 mi.
144 ft.

Relative:
Higher

Actual:
933 ft.

EDR Historical Auto Stations:
Name: ALBERTOS AUTO TECH
Year: 2009
Address: 10529 CEDROS AVE

33 NW < 1/8 0.043 mi. 226 ft. | **BROKER HAZMAT DISPOSAL INC**
14839 SAN JOSE ST
MISSION HILLS, CA 91345 | **RCRA NonGen / NLR**
FINDS | **1000978110**
CA0000901835

Relative: Higher

Actual: 930 ft.

RCRA NonGen / NLR:

Date form received by agency:	10/26/1994
Facility name:	BROKER HAZMAT DISPOSAL INC
Facility address:	14839 SAN JOSE ST MISSION HILLS, CA 91345
EPA ID:	CA0000901835
Mailing address:	SAN JOSE ST MISSION HILLS, CA 91345
Contact:	GEORGE DEMAREE
Contact address:	14839 SAN JOSE ST MISSION HILLS, CA 91345
Contact country:	US
Contact telephone:	(818) 361-6161
Contact email:	Not reported
EPA Region:	09
Classification:	Non-Generator
Description:	Handler: Non-Generators do not presently generate hazardous waste

Owner/Operator Summary:

Owner/operator name:	GEORGE DEMAREE
Owner/operator address:	14839 SAN JOSE ST MISSION HILLS, CA 91345
Owner/operator country:	Not reported
Owner/operator telephone:	(818) 361-6161
Legal status:	Private
Owner/Operator Type:	Owner
Owner/Op start date:	Not reported
Owner/Op end date:	Not reported

Handler Activities Summary:

U.S. importer of hazardous waste:	No
Mixed waste (haz. and radioactive):	No
Recycler of hazardous waste:	No
Transporter of hazardous waste:	Yes
Treater, storer or disposer of HW:	No
Underground injection activity:	No
On-site burner exemption:	No
Furnace exemption:	No
Used oil fuel burner:	No
Used oil processor:	No
User oil refiner:	No
Used oil fuel marketer to burner:	No
Used oil Specification marketer:	No
Used oil transfer facility:	No
Used oil transporter:	No

Violation Status: No violations found

FINDS:

Registry ID: 110002621002

Environmental Interest/Information System

BROKER HAZMAT DISPOSAL INC (Continued) **1000978110**

RCRAInfo is a national information system that supports the Resource Conservation and Recovery Act (RCRA) program through the tracking of events and activities related to facilities that generate, transport, and treat, store, or dispose of hazardous waste. RCRAInfo allows RCRA program staff to track the notification, permit, compliance, and corrective action activities required under RCRA.

34
NE
< 1/8
0.053 mi.
282 ft.

SAN FERNANDO CITY LANDFILL
SHARP AVE & PAXTON
SAN FERNANDO, CA

WMUDS/SWAT **S103441560**
N/A

Relative:
Higher

Actual:
960 ft.

WMUDS/SWAT:

Edit Date:	Not reported
Complexity:	Not reported
Primary Waste:	Not reported
Primary Waste Type:	Not reported
Secondary Waste:	Not reported
Secondary Waste Type:	Not reported
Base Meridian:	Not reported
NPID:	Not reported
Tonnage:	0
Regional Board ID:	Not reported
Municipal Solid Waste:	False
Superorder:	False
Open To Public:	False
Waste List:	False
Agency Type:	Not reported
Agency Name:	CITY OF SAN FERNANDO
Agency Department:	Not reported
Agency Address:	Not reported
Agency City,St,Zip:	Not reported
Agency Contact:	Not reported
Agency Telephone:	Not reported
Land Owner Name:	Not reported
Land Owner Address:	Not reported
Land Owner City,St,Zip:	CA
Land Owner Contact:	Not reported
Land Owner Phone:	Not reported
Region:	4
Facility Type:	Not reported
Facility Description:	Not reported
Facility Telephone:	Not reported
SWAT Facility Name:	Not reported
Primary SIC:	Not reported
Secondary SIC:	Not reported
Comments:	Not reported
Last Facility Editors:	Not reported
Waste Discharge System:	False
Solid Waste Assessment Test Program:	True
Toxic Pits Cleanup Act Program:	False
Resource Conservation Recovery Act:	False
Department of Defence:	False
Solid Waste Assessment Test Program:	CITY OF SAN FERNANDO
Threat to Water Quality:	Not reported
Sub Chapter 15:	False

SAN FERNANDO CITY LANDFILL (Continued) **S103441560**

Regional Board Project Officer:	LT
Number of WMUDS at Facility:	1
Section Range:	Not reported
RCRA Facility:	Not reported
Waste Discharge Requirements:	Not reported
Self-Monitoring Rept. Frequency:	Not reported
Waste Discharge System ID:	4 190329NUR
Solid Waste Information ID:	Not reported

35
NNE
< 1/8
0.103 mi.
546 ft.

10729 SHARP AVE
MISSION HILLS, CA 91345

EDR US Hist Cleaners **1014972634**
N/A

Relative:
Higher

Actual:
966 ft.

EDR Historical Cleaners:

Name:	MAGIC MIST CARPET CLEANING
Year:	1999
Address:	10729 SHARP AVE
Name:	MAGIC MIST CARPET CLEANING
Year:	2001
Address:	10729 SHARP AVE
Name:	MAGIC MIST CARPET CLEANING
Year:	2002
Address:	10729 SHARP AVE
Name:	MAGIC MIST CARPET CLEANING
Year:	2003
Address:	10729 SHARP AVE

36
SSE
1/8-1/4
0.126 mi.
666 ft.

9930 OBECK AVE
PACOIMA, CA 91331

EDR US Hist Auto Stat **1015690264**
N/A

Relative:
Lower

Actual:
915 ft.

EDR Historical Auto Stations:

Name:	WHITES MOBILE AUTO REPAIR
Year:	2006
Address:	9930 OBECK AVE

37
NNE
1/8-1/4
0.127 mi.
669 ft.

10870 LAUREL CANYON BLVD
SAN FERNANDO, CA 91340

EDR US Hist Auto Stat **1015147829**
N/A

Relative:
Higher

Actual:
985 ft.

EDR Historical Auto Stations:

Name:	LARRONDOS AUTO REPAIR
Year:	2007
Address:	10870 LAUREL CANYON BLVD
Name:	LARRONDOS AUTO REPAIR

(Continued) **1015147829**

Year: 2008
Address: 10870 LAUREL CANYON BLVD

---

38 North 1/8-1/4 0.163 mi. 861 ft.

ALONA ENTERPRISERS
14615 CHATSWORTH ST
MISSION HILLS, CA 91345

CA FID UST **S101588139**
SWEEPS UST **N/A**

Relative: Higher

Actual: 951 ft.

CA FID UST:

Facility ID:	19056375
Regulated By:	UTNKA
Regulated ID:	Not reported
Cortese Code:	Not reported
SIC Code:	Not reported
Facility Phone:	2130000000
Mail To:	Not reported
Mailing Address:	14615 CHATSWORTH ST
Mailing Address 2:	Not reported
Mailing City,St,Zip:	MISSION HILLS 913450000
Contact:	Not reported
Contact Phone:	Not reported
DUNs Number:	Not reported
NPDES Number:	Not reported
EPA ID:	Not reported
Comments:	Not reported
Status:	Active

SWEEPS UST:

Status:	Not reported
Comp Number:	6886
Number:	Not reported
Board Of Equalization:	Not reported
Referral Date:	Not reported
Action Date:	Not reported
Created Date:	Not reported
Owner Tank Id:	Not reported
SWRCB Tank Id:	Not reported
Tank Status:	Not reported
Capacity:	Not reported
Active Date:	Not reported
Tank Use:	Not reported
STG:	Not reported
Content:	Not reported
Number Of Tanks:	Not reported

E39
NE
1/8-1/4
0.166 mi.
877 ft.

PYUNG SHELL SERVICE STATION
10685 LAUREL CANYON BLVD
PACOIMA, CA 91331

CA FID UST **S101587624**
SWEEPS UST **N/A**

Site 1 of 6 in cluster E

Relative:
Higher

Actual:
978 ft.

CA FID UST:

Facility ID:	19055828
Regulated By:	UTNKA
Regulated ID:	Not reported
Cortese Code:	Not reported
SIC Code:	Not reported
Facility Phone:	8188996612
Mail To:	Not reported
Mailing Address:	10685 LAUREL CANYON BLVD
Mailing Address 2:	Not reported
Mailing City,St,Zip:	PACOIMA 913310000
Contact:	Not reported
Contact Phone:	Not reported
DUNs Number:	Not reported
NPDES Number:	Not reported
EPA ID:	Not reported
Comments:	Not reported
Status:	Active

SWEEPS UST:

Status:	Active
Comp Number:	4549
Number:	2
Board Of Equalization:	Not reported
Referral Date:	02-25-93
Action Date:	05-04-94
Created Date:	02-29-88
Owner Tank Id:	Not reported
SWRCB Tank Id:	Not reported
Tank Status:	Not reported
Capacity:	Not reported
Active Date:	Not reported
Tank Use:	Not reported
STG:	Not reported
Content:	Not reported
Number Of Tanks:	Not reported

E40
NE
1/8-1/4
0.166 mi.
877 ft.

10685 LAUREL CANYON BLVD
PACOIMA, CA 91331

EDR US Hist Auto Stat **1015143531**
N/A

Site 2 of 6 in cluster E

Relative:
Higher

Actual:
978 ft.

EDR Historical Auto Stations:

Name:	PYUNG SHELL STATION INC
Year:	2005
Address:	10685 LAUREL CANYON BLVD
Name:	PYUNG SHELL STATION INC
Year:	2008
Address:	10685 LAUREL CANYON BLVD

E41 NE 1/8-1/4 0.166 mi. 877 ft. | **PACOIMA SHELL** | **UST** | **U003781061** | **N/A**
10685 LAUREL CANYON BLVD
PACOIMA, CA 91331

Site 3 of 6 in cluster E

Relative: Higher
Actual: 978 ft.

UST:

Facility ID:	24681
Permitting Agency:	LOS ANGELES, CITY OF
Latitude:	34.265626
Longitude:	-118.437073

E42 NE 1/8-1/4 0.166 mi. 877 ft. | **SHELL OIL PRODUCTS CO** | **HIST CORTESE** | **S105025439** | **N/A**
10685 LAUREL CNYN
PACOIMA, CA 91331

Site 4 of 6 in cluster E

Relative: Higher
Actual: 978 ft.

HIST CORTESE:

Region:	CORTESE
Facility County Code:	19
Reg By:	LTNKA
Reg Id:	913311170

E43 NE 1/8-1/4 0.166 mi. 877 ft. | **SHELL SERVICE STATION** | **RCRA-SQG** | **1006805396**
FINDS | **CAR000126581**
10685 LAUREL CANYON BLVD | **HAZNET**
PACOIMA, CA 91331

Site 5 of 6 in cluster E

Relative: Higher
Actual: 978 ft.

RCRA-SQG:

Date form received by agency:	08/16/2002
Facility name:	SHELL SERVICE STATION
Facility address:	10685 LAUREL CANYON BLVD S A P 135727 PACOIMA, CA 913313532
EPA ID:	CAR000126581
Mailing address:	P O BOX 2648 HOUSTON, TX 772522648
Contact:	SONDRA BIENVENU
Contact address:	P O BOX 2648 HOUSTON, TX 772522648
Contact country:	US
Contact telephone:	(713) 241-5036
Contact email:	Not reported
EPA Region:	09
Classification:	Small Small Quantity Generator
Description:	Handler: generates more than 100 and less than 1000 kg of hazardous waste during any calendar month and accumulates less than 6000 kg of hazardous waste at any time; or generates 100 kg or less of hazardous waste during any calendar month, and accumulates more than 1000 kg of hazardous waste at any time

Owner/Operator Summary:

Owner/operator name:	EQUILON ENTERPRISES L L C
Owner/operator address:	P O BOX 2648 HOUSTON, TX 77252
Owner/operator country:	Not reported

SHELL SERVICE STATION (Continued) **1006805396**

Owner/operator telephone: (713) 241-5036
Legal status: Private
Owner/Operator Type: Owner
Owner/Op start date: Not reported
Owner/Op end date: Not reported

Handler Activities Summary:
U.S. importer of hazardous waste: No
Mixed waste (haz. and radioactive): No
Recycler of hazardous waste: No
Transporter of hazardous waste: No
Treater, storer or disposer of HW: No
Underground injection activity: No
On-site burner exemption: No
Furnace exemption: No
Used oil fuel burner: No
Used oil processor: No
User oil refiner: No
Used oil fuel marketer to burner: No
Used oil Specification marketer: No
Used oil transfer facility: No
Used oil transporter: No

Hazardous Waste Summary:
Waste code: D001
Waste name: IGNITABLE HAZARDOUS WASTES ARE THOSE WASTES WHICH HAVE A FLASHPOINT OF LESS THAN 140 DEGREES FAHRENHEIT AS DETERMINED BY A PENSKY-MARTENS CLOSED CUP FLASH POINT TESTER. ANOTHER METHOD OF DETERMINING THE FLASH POINT OF A WASTE IS TO REVIEW THE MATERIAL SAFETY DATA SHEET, WHICH CAN BE OBTAINED FROM THE MANUFACTURER OR DISTRIBUTOR OF THE MATERIAL. LACQUER THINNER IS AN EXAMPLE OF A COMMONLY USED SOLVENT WHICH WOULD BE CONSIDERED AS IGNITABLE HAZARDOUS WASTE.

Waste code: D018
Waste name: BENZENE

Violation Status: No violations found

FINDS:

Registry ID: 110013308036

Environmental Interest/Information System
California Hazardous Waste Tracking System - Datamart (HWTS-DATAMART) provides California with information on hazardous waste shipments for generators, transporters, and treatment, storage, and disposal facilities.

RCRAInfo is a national information system that supports the Resource Conservation and Recovery Act (RCRA) program through the tracking of events and activities related to facilities that generate, transport, and treat, store, or dispose of hazardous waste. RCRAInfo allows RCRA program staff to track the notification, permit, compliance, and corrective action activities required under RCRA.

SHELL SERVICE STATION (Continued) **1006805396**

HAZNET:

envid:	1006805396
Year:	2011
GEPAID:	CAR000126581
Contact:	J. Traylor/ENV REPORTING ANALYST
Telephone:	7132416992
Mailing Name:	Not reported
Mailing Address:	PO Box 3127
Mailing City,St,Zip:	HOUSTON, TX 772530000
Gen County:	Not reported
TSD EPA ID:	TXD055141378
TSD County:	Not reported
Waste Category:	Other organic solids
Disposal Method:	Incineration--Thermal Destruction Other Than Use As A Fuel
Tons:	0.12
Facility County:	Los Angeles

envid:	1006805396
Year:	2008
GEPAID:	CAR000126581
Contact:	R HULL/ENV. REPORTING ANALYST
Telephone:	2818742224
Mailing Name:	Not reported
Mailing Address:	12700 NORTHBOROUGH DR 300G03
Mailing City,St,Zip:	Houston, TX 770670000
Gen County:	Not reported
TSD EPA ID:	CAD008302903
TSD County:	Not reported
Waste Category:	Other organic solids
Disposal Method:	Storage, Bulking, And/Or Transfer Off Site--No Treatment/Reovery (H010-H129) Or (H131-H135)
Tons:	0.025
Facility County:	Los Angeles

envid:	1006805396
Year:	2008
GEPAID:	CAR000126581
Contact:	R HULL/ENV. REPORTING ANALYST
Telephone:	2818742224
Mailing Name:	Not reported
Mailing Address:	12700 NORTHBOROUGH DR 300G03
Mailing City,St,Zip:	Houston, TX 770670000
Gen County:	Not reported
TSD EPA ID:	CAD028409019
TSD County:	Not reported
Waste Category:	Other organic solids
Disposal Method:	Storage, Bulking, And/Or Transfer Off Site--No Treatment/Reovery (H010-H129) Or (H131-H135)
Tons:	0.14
Facility County:	Los Angeles

envid:	1006805396
Year:	2006
GEPAID:	CAR000126581
Contact:	R HULL/ENV. REPORTING ANALYST
Telephone:	2818742224
Mailing Name:	Not reported

SHELL SERVICE STATION (Continued) **1006805396**

Mailing Address:	12700 NORTHBOROUGH DR 300G03
Mailing City,St,Zip:	Houston, TX 770670000
Gen County:	Not reported
TSD EPA ID:	CAD008302903
TSD County:	Not reported
Waste Category:	Other organic solids
Disposal Method:	Transfer Station
Tons:	0.03
Facility County:	Los Angeles

envid:	1006805396
Year:	2004
GEPAID:	CAR000126581
Contact:	N CORTEZ/ENVT'L DATA ANALYST
Telephone:	2818742224
Mailing Name:	Not reported
Mailing Address:	12700 NORTHBOROUGH DRIVE MFT 240-G
Mailing City,St,Zip:	Houston, TX 770672508
Gen County:	Not reported
TSD EPA ID:	CAT080013352
TSD County:	Not reported
Waste Category:	Aqueous solution with total organic residues less than 10 percent
Disposal Method:	Not reported
Tons:	0.62
Facility County:	Los Angeles

Click this hyperlink while viewing on your computer to access
4 additional CA_HAZNET: record(s) in the EDR Site Report.

E44 **SHELL OIL PRODUCTS CO** **LUST** **S102590679**
NE **10685 LAUREL CANYON** **N/A**
1/8-1/4 **PACOIMA, CA 91331**
0.166 mi.
877 ft. **Site 6 of 6 in cluster E**

Relative:
Higher

Actual:
978 ft.

LUST:

Region:	STATE
Global Id:	T0603702202
Latitude:	34.264276
Longitude:	-118.438422
Case Type:	LUST Cleanup Site
Status:	Completed - Case Closed
Status Date:	08/01/2002
Lead Agency:	LOS ANGELES, CITY OF
Case Worker:	EL
Local Agency:	LOS ANGELES, CITY OF
RB Case Number:	913311170
LOC Case Number:	Not reported
File Location:	Not reported
Potential Media Affect:	Soil
Potential Contaminants of Concern:	Gasoline
Site History:	Not reported

Click here to access the California GeoTracker records for this facility:

Contact:

Global Id:	T0603702202
Contact Type:	Local Agency Caseworker

SHELL OIL PRODUCTS CO (Continued) **S102590679**

Contact Name: ELOY LUNA
Organization Name: LOS ANGELES, CITY OF
Address: 200 North Main Street, Suite 1780
City: LOS ANGELES
Email: eloy.luna@lacity.org
Phone Number: Not reported

Global Id: T0603702202
Contact Type: Regional Board Caseworker
Contact Name: YUE RONG
Organization Name: LOS ANGELES RWQCB (REGION 4)
Address: 320 W. 4TH ST., SUITE 200
City: Los Angeles
Email: yrong@waterboards.ca.gov
Phone Number: Not reported

Status History:
Global Id: T0603702202
Status: Open - Remediation
Status Date: 08/30/1996

Global Id: T0603702202
Status: Completed - Case Closed
Status Date: 08/01/2002

Global Id: T0603702202
Status: Open - Case Begin Date
Status Date: 08/30/1996

Regulatory Activities:
Global Id: T0603702202
Action Type: Other
Date: 08/30/1996
Action: Leak Discovery

Global Id: T0603702202
Action Type: Other
Date: 09/09/1996
Action: Leak Reported

LUST REG 4:
Region: 4
Regional Board: 04
County: Los Angeles
Facility Id: 913311170
Status: Remedial action (cleanup) Underway
Substance: Gasoline
Substance Quantity: Not reported
Local Case No: Not reported
Case Type: Soil
Abatement Method Used at the Site: OT
Global ID: T0603702202
W Global ID: Not reported
Staff: UNK
Local Agency: 19050

SHELL OIL PRODUCTS CO (Continued) **S102590679**

Cross Street:	PAXTON ST	
Enforcement Type:	Not reported	
Date Leak Discovered:	8/30/1996	
Date Leak First Reported:		9/9/1996
Date Leak Record Entered:	4/29/1997	
Date Confirmation Began:	Not reported	
Date Leak Stopped:	Not reported	
Date Case Last Changed on Database:		9/9/1996
Date the Case was Closed:		Not reported
How Leak Discovered:	OM	
How Leak Stopped:	Not reported	
Cause of Leak:	UNK	
Leak Source:	Other Source	
Operator:	PYUNG SUN KIM	
Water System:	Not reported	
Well Name:	Not reported	
Approx. Dist To Production Well (ft):		12104.03638151404854387940819
Source of Cleanup Funding:		Other Source
Preliminary Site Assessment Workplan Submitted:		Not reported
Preliminary Site Assessment Began:		Not reported
Pollution Characterization Began:		Not reported
Remediation Plan Submitted:		Not reported
Remedial Action Underway:		8/30/1996
Post Remedial Action Monitoring Began:		Not reported
Enforcement Action Date:		Not reported
Historical Max MTBE Date:		Not reported
Hist Max MTBE Conc in Groundwater:		Not reported
Hist Max MTBE Conc in Soil:		Not reported
Significant Interim Remedial Action Taken:		Not reported
GW Qualifier:	Not reported	
Soil Qualifier:	Not reported	
Organization:	Not reported	
Owner Contact:	Not reported	
Responsible Party:	SHELL OIL PRODUCTS CO	
RP Address:	3611 S. HARBOR BLVD., STE 1690, SANTA ANA CA 92704	
Program:	LUST	
Lat/Long:	34.2643124 / -1	
Local Agency Staff:	PEJ	
Beneficial Use:	Not reported	
Priority:	Not reported	
Cleanup Fund Id:	Not reported	
Suspended:	Not reported	
Assigned Name:	Not reported	
Summary:	SITE UNDER INVESTIGATION	

45
NW
1/8-1/4
0.198 mi.
1045 ft.

SAN JOSE STREET ELEMENTARY SCHOOL
14928 CLYMER ST
MISSION HILLS, CA 91345

RCRA-LQG **1011861682**
CAR000196451

Relative:
Higher

Actual:
937 ft.

RCRA-LQG:

Date form received by agency:	11/05/2008
Facility name:	SAN JOSE STREET ELEMENTARY SCHOOL
Facility address:	14928 CLYMER ST MISSION HILLS, CA 91345
EPA ID:	CAR000196451
Mailing address:	333 S BEAUDRY AVE

SAN JOSE STREET ELEMENTARY SCHOOL (Continued) **1011861682**

20TH FL LAUSD OEHS
LOS ANGELES, CA 90017
Contact: SOE AUNG
Contact address: 333 S BEAUDRY AVE 20TH FL LAUSD OEHS
LOS ANGELES, CA 90017
Contact country: US
Contact telephone: 213-241-3904
Contact email: SOE.AUNG@LAUSD.NET
EPA Region: 09
Classification: Large Quantity Generator
Description: Handler: generates 1,000 kg or more of hazardous waste during any calendar month; or generates more than 1 kg of acutely hazardous waste during any calendar month; or generates more than 100 kg of any residue or contaminated soil, waste or other debris resulting from the cleanup of a spill, into or on any land or water, of acutely hazardous waste during any calendar month; or generates 1 kg or less of acutely hazardous waste during any calendar month, and accumulates more than 1 kg of acutely hazardous waste at any time; or generates 100 kg or less of any residue or contaminated soil, waste or other debris resulting from the cleanup of a spill, into or on any land or water, of acutely hazardous waste during any calendar month, and accumulates more than 100 kg of that material at any time

Owner/Operator Summary:
Owner/operator name: LAUSD
Owner/operator address: 333 S BEAUDRY AVE
LOS ANGELES, CA 90017
Owner/operator country: US
Owner/operator telephone: Not reported
Legal status: District
Owner/Operator Type: Owner
Owner/Op start date: 11/14/1989
Owner/Op end date: Not reported

Owner/operator name: SAN JOSE ST ELEMENTARY SCHOOL
Owner/operator address: Not reported
Not reported
Owner/operator country: Not reported
Owner/operator telephone: Not reported
Legal status: District
Owner/Operator Type: Operator
Owner/Op start date: 11/14/1989
Owner/Op end date: Not reported

Handler Activities Summary:
U.S. importer of hazardous waste: No
Mixed waste (haz. and radioactive): No
Recycler of hazardous waste: No
Transporter of hazardous waste: No
Treater, storer or disposer of HW: No
Underground injection activity: No
On-site burner exemption: No
Furnace exemption: No
Used oil fuel burner: No
Used oil processor: No
User oil refiner: No

SAN JOSE STREET ELEMENTARY SCHOOL (Continued) **1011861682**

Used oil fuel marketer to burner: No
Used oil Specification marketer: No
Used oil transfer facility: No
Used oil transporter: No

Hazardous Waste Summary:
Waste code: D008
Waste name: LEAD

Violation Status: No violations found

46
SW
1/8-1/4
0.209 mi.
1101 ft.

14829 LASSEN ST
MISSION HILLS, CA 91345

EDR US Hist Cleaners **1014995267**
N/A

Relative:
Lower

Actual:
897 ft.

EDR Historical Cleaners:
Name: WALTERS CARPET CLEANING
Year: 2001
Address: 14829 LASSEN ST

Name: WALTERS CARPET CLEANING
Year: 2003
Address: 14829 LASSEN ST

Name: WALTERS CARPET CLEANING
Year: 2009
Address: 14829 LASSEN ST

47
ENE
1/8-1/4
0.219 mi.
1157 ft.

10375 SHARP AVE
PACOIMA, CA 91331

EDR US Hist Auto Stat **1015135461**
N/A

Relative:
Higher

Actual:
958 ft.

EDR Historical Auto Stations:
Name: ALL TUNE & LUBE
Year: 2007
Address: 10375 SHARP AVE

Name: ALLDUNE & LUBE
Year: 2008
Address: 10375 SHARP AVE

48
SSW
1/8-1/4
0.229 mi.
1209 ft.

C&S TRUCKING CO
9747 CEDROS AVE
PANORAMA CITY, CA 91402

RCRA NonGen / NLR **1000134977**
FINDS **CAD981696404**

Relative:
Lower

Actual:
889 ft.

RCRA NonGen / NLR:
Date form received by agency: 01/16/1987
Facility name: C&S TRUCKING CO
Facility address: 9747 CEDROS AVE

C&S TRUCKING CO (Continued) **1000134977**

	PANORAMA CITY, CA 91402
EPA ID:	CAD981696404
Mailing address:	PO BOX 5455
	MISSION HILLS, CA 91345
Contact:	ENVIRONMENTAL MANAGER
Contact address:	9747 CEDROS AVE
	PANORAMA CITY, CA 91402
Contact country:	US
Contact telephone:	(818) 893-5887
Contact email:	Not reported
EPA Region:	09
Classification:	Non-Generator
Description:	Handler: Non-Generators do not presently generate hazardous waste

Owner/Operator Summary:

Owner/operator name:	CARLOS SANCHEZ
Owner/operator address:	NOT REQUIRED
	NOT REQUIRED, ME 99999
Owner/operator country:	Not reported
Owner/operator telephone:	(415) 555-1212
Legal status:	Private
Owner/Operator Type:	Owner
Owner/Op start date:	Not reported
Owner/Op end date:	Not reported
Owner/operator name:	NOT REQUIRED
Owner/operator address:	NOT REQUIRED
	NOT REQUIRED, ME 99999
Owner/operator country:	Not reported
Owner/operator telephone:	(415) 555-1212
Legal status:	Private
Owner/Operator Type:	Operator
Owner/Op start date:	Not reported
Owner/Op end date:	Not reported

Handler Activities Summary:

U.S. importer of hazardous waste:	No
Mixed waste (haz. and radioactive):	No
Recycler of hazardous waste:	No
Transporter of hazardous waste:	Yes
Treater, storer or disposer of HW:	No
Underground injection activity:	No
On-site burner exemption:	No
Furnace exemption:	No
Used oil fuel burner:	No
Used oil processor:	No
User oil refiner:	No
Used oil fuel marketer to burner:	No
Used oil Specification marketer:	No
Used oil transfer facility:	No
Used oil transporter:	No

Violation Status: No violations found

FINDS:

Registry ID: 110002756198

C&S TRUCKING CO (Continued) **1000134977**

Environmental Interest/Information System
RCRAInfo is a national information system that supports the Resource Conservation and Recovery Act (RCRA) program through the tracking of events and activities related to facilities that generate, transport, and treat, store, or dispose of hazardous waste. RCRAInfo allows RCRA program staff to track the notification, permit, compliance, and corrective action activities required under RCRA.

49
NE
1/8-1/4
0.244 mi.
1290 ft.

13985 WEIDNER ST
PACOIMA, CA 91331

EDR US Hist Cleaners **1014991215**
N/A

Relative:
Higher

Actual:
970 ft.

EDR Historical Cleaners:

Name:	GARCIAS CARPET CLEANING
Year:	2003
Address:	13985 WEIDNER ST

F50
ESE
1/8-1/4
0.248 mi.
1309 ft.

10108 ARLETA AVE
PACOIMA, CA 91331

Site 1 of 2 in cluster F

EDR US Hist Auto Stat **1015126537**
N/A

Relative:
Higher

Actual:
931 ft.

EDR Historical Auto Stations:

Name:	FAREWAY TRANSMISSIONS
Year:	1999
Address:	10108 ARLETA AVE
Name:	FAREWAY TRANSMISSIONS
Year:	2002
Address:	10108 ARLETA AVE
Name:	FAREWAY TRANSMISSIONS
Year:	2004
Address:	10108 ARLETA AVE
Name:	FAREWAY TRANSMISSIONS
Year:	2010
Address:	10108 ARLETA AVE

F51
ESE
1/4-1/2
0.260 mi.
1371 ft.

RAMIREZ RECYCLING CENTER
14035 1/2 VAN NUYS BLVD
ARLETA, CA 91331

Site 2 of 2 in cluster F

SWRCY **S107137646**
N/A

Relative:
Higher

Actual:
930 ft.

SWRCY:

Reg Id:	23718
Cert Id:	RC11905
Mailing Address:	15043 Astoria St
Mailing City:	Sylmar
Mailing State:	CA

RAMIREZ RECYCLING CENTER (Continued) **S107137646**

Mailing Zip Code:	91342
Website:	Not reported
Email:	Not reported
Phone Number:	(818) 326-3524
Grand Father:	N
Rural:	N
Operation Begin Date:	10/01/2003
Aluminium:	Y
Glass:	Y
Plastic:	Y
Bimetal:	Y
Agency:	N/A
Monday Hours Of Operation:	8:00 am - 6:00 pm
Tuesday Hours Of Operation:	8:00 am - 6:00 pm
Wednesday Hours Of Operation:	8:00 am - 6:00 pm
Thursday Hours Of Operation:	8:00 am - 6:00 pm
Friday Hours Of Operation:	8:00 am - 6:00 pm
Saturday Hours Of Operation:	8:00 am - 6:00 pm
Sunday Hours Of Operation:	8:00 am - 3:00 pm
Organization ID:	19107
Organization Name:	Ramirez Recycling Center

---

52 **VAN NUYS** **US BROWNFIELDS** **1016680011**
ESE **14094 VAN NUYS BLVD** **N/A**
1/4-1/2 **LOS ANGELES, CA 91331**
0.262 mi.
1385 ft.

Relative:
Lower

Actual:
916 ft.

US BROWNFIELDS:

Recipient name:	Los Angeles, City of
Grant type:	Assessment
Property name:	VAN NUYS
Property #:	Not reported
Parcel size:	.38
Property Description:	Not reported
Latitude:	Not reported
Longitude:	Not reported
HCM label:	Not reported
Map scale:	Not reported
Point of reference:	Not reported
Datum:	North American Datum of 1983
ACRES property ID:	165721
Start date:	Not reported
Completed date:	Not reported
Acres cleaned up:	Not reported
Cleanup funding:	Not reported
Cleanup funding source:	Not reported
Assessment funding:	4551
Assessment funding source:	US EPA - Brownfields Assessment Cooperative Agreement
Redevelopment funding:	Not reported
Redev. funding source:	Not reported
Redev. funding entity name:	Not reported
Redevelopment start date:	Not reported
Assessment funding entity:	EPA
Cleanup funding entity:	Not reported
Grant type:	P
Accomplishment type:	Phase I Environmental Assessment
Accomplishment count:	1

VAN NUYS (Continued) **1016680011**

Cooperative agreement #:	96934601
Ownership entity:	Not reported
Current owner:	Not reported
Did owner change:	Not reported
Cleanup required:	No
Video available:	Not reported
Photo available:	Not reported
Institutional controls required:	U
IC Category proprietary controls:	Not reported
IC cat. info. devices:	Not reported
IC cat. gov. controls:	Not reported
IC cat. enforcement permit tools:	Not reported
IC in place date:	Not reported
IC in place:	Not reported
State/tribal program date:	Not reported
State/tribal program ID:	Not reported
State/tribal NFA date:	Not reported
Air contaminated:	Not reported
Air cleaned:	Not reported
Asbestos found:	Not reported
Asbestos cleaned:	Not reported
Controled substance found:	Not reported
Controled substance cleaned:	Not reported
Drinking water affected:	Not reported
Drinking water cleaned:	Not reported
Groundwater affected:	Not reported
Groundwater cleaned:	Not reported
Lead contaminant found:	Not reported
Lead cleaned up:	Not reported
No media affected:	Not reported
Unknown media affected:	Not reported
Other cleaned up:	Not reported
Other metals found:	Not reported
Other metals cleaned:	Not reported
Other contaminants found:	Not reported
Other contams found description:	Not reported
PAHs found:	Not reported
PAHs cleaned up:	Not reported
PCBs found:	Not reported
PCBs cleaned up:	Not reported
Petro products found:	Not reported
Petro products cleaned:	Not reported
Sediments found:	Not reported
Sediments cleaned:	Not reported
Soil affected:	Not reported
Soil cleaned up:	Not reported
Surface water cleaned:	Not reported
VOCs found:	Not reported
VOCs cleaned:	Not reported
Cleanup other description:	Not reported
Num. of cleanup and re-dev. jobs:	Not reported
Past use greenspace acreage:	Not reported
Past use residential acreage:	Not reported
Past use commercial acreage:	Not reported
Past use industrial acreage:	Not reported
Future use greenspace acreage:	Not reported
Future use residential acreage:	Not reported

VAN NUYS (Continued) **1016680011**

Future use commercial acreage:	Not reported
Future use industrial acreage:	Not reported
Greenspace acreage and type:	Not reported
Superfund Fed. landowner flag:	Not reported
Arsenic cleaned up:	Not reported
Cadmium cleaned up:	Not reported
Chromium cleaned up:	Not reported
Copper cleaned up:	Not reported
Iron cleaned up:	Not reported
mercury cleaned up:	Not reported
nickel cleaned up:	Not reported
No clean up:	Not reported
Pesticides cleaned up:	Not reported
Selenium cleaned up:	Not reported
SVOCs cleaned up:	Not reported
Unknown clean up:	Not reported
Arsenic contaminant found:	Not reported
Cadmium contaminant found:	Not reported
Chromium contaminant found:	Not reported
Copper contaminant found:	Not reported
Iron contaminant found:	Not reported
Mercury contaminant found:	Not reported
Nickel contaminant found:	Not reported
No contaminant found:	Not reported
Pesticides contaminant found:	Not reported
Selenium contaminant found:	Not reported
SVOCs contaminant found:	Not reported
Unknown contaminant found:	Not reported
Future Use: Multistory	Not reported
Media affected Bluiding Material:	Not reported
Media affected indoor air:	Not reported
Building material media cleaned up:	Not reported
Indoor air media cleaned up:	Not reported
Unknown media cleaned up:	Not reported
Past Use: Multistory	Not reported

G53 **EAST VALLEY HIGH SCHOOL NO. 2** **SCH** **S107736255**
SE **14184-14210 VAN NUYS BLVD.** **ENVIROSTOR** **N/A**
1/4-1/2 **PACOIMA, CA 91331**
0.264 mi.
1392 ft. **Site 1 of 2 in cluster G**

Relative:
Lower

Actual:
919 ft.

SCH:

Facility ID:	19590010
Site Type:	School Investigation
Site Type Detail:	School
Site Mgmt. Req.:	NONE SPECIFIED
Acres:	13
National Priorities List:	NO
Cleanup Oversight Agencies:	SMBRP
Lead Agency:	SMBRP
Lead Agency Description:	DTSC - Site Cleanup Program
Project Manager:	Not reported
Supervisor:	Shahir Haddad
Division Branch:	Southern California Schools & Brownfields Outreach
Site Code:	304082
Assembly:	39

EAST VALLEY HIGH SCHOOL NO. 2 (Continued) **S107736255**

Senate:	20
Special Program Status:	Not reported
Status:	No Further Action
Status Date:	02/26/2004
Restricted Use:	NO
Funding:	School District
Latitude:	34.24925
Longitude:	-118.4410
APN:	2644001900
Past Use:	* RETIAL - MISC.
Potential COC:	Polychlorinated biphenyls (PCBs
Confirmed COC:	NONE SPECIFIED
Potential Description:	SOIL
Alias Name:	EAST VALLEY HIGH SCHOOL #2
Alias Type:	Alternate Name
Alias Name:	EAST VALLEY HIGH SCHOOL #2/VCA
Alias Type:	Alternate Name
Alias Name:	LOS ANGELES UNIFIED SCHOOL DISTRICT
Alias Type:	Alternate Name
Alias Name:	2644001900
Alias Type:	APN
Alias Name:	304082
Alias Type:	Project Code (Site Code)
Alias Name:	19590010
Alias Type:	Envirostor ID Number

Completed Info:

Completed Area Name:	PROJECT WIDE
Completed Sub Area Name:	Not reported
Completed Document Type:	Environmental Oversight Agreement
Completed Date:	02/10/2000
Comments:	Not reported
Completed Area Name:	PROJECT WIDE
Completed Sub Area Name:	Not reported
Completed Document Type:	Cost Recovery Closeout Memo
Completed Date:	02/26/2004
Comments:	Not reported
Completed Area Name:	PROJECT WIDE
Completed Sub Area Name:	Not reported
Completed Document Type:	Preliminary Endangerment Assessment Report
Completed Date:	11/30/2001
Comments:	Not reported
Completed Area Name:	PROJECT WIDE
Completed Sub Area Name:	Not reported
Completed Document Type:	Supplemental Site Investigation Report
Completed Date:	08/23/2001
Comments:	Not reported
Future Area Name:	Not reported
Future Sub Area Name:	Not reported
Future Document Type:	Not reported
Future Due Date:	Not reported
Schedule Area Name:	Not reported
Schedule Sub Area Name:	Not reported
Schedule Document Type:	Not reported

EAST VALLEY HIGH SCHOOL NO. 2 (Continued) **S107736255**

Schedule Due Date: Not reported
Schedule Revised Date: Not reported

ENVIROSTOR:
Facility ID: 19590010
Status: No Further Action
Status Date: 02/26/2004
Site Code: 304082
Site Type: School Investigation
Site Type Detailed: School
Acres: 13
NPL: NO
Regulatory Agencies: SMBRP
Lead Agency: SMBRP
Program Manager: Not reported
Supervisor: Shahir Haddad
Division Branch: Southern California Schools & Brownfields Outreach
Assembly: 39
Senate: 20
Special Program: Not reported
Restricted Use: NO
Site Mgmt Req: NONE SPECIFIED
Funding: School District
Latitude: 34.24925
Longitude: -118.4410
APN: 2644001900
Past Use: * RETIAL - MISC.
Potential COC: Polychlorinated biphenyls (PCBs
Confirmed COC: NONE SPECIFIED
Potential Description: SOIL
Alias Name: EAST VALLEY HIGH SCHOOL #2
Alias Type: Alternate Name
Alias Name: EAST VALLEY HIGH SCHOOL #2/VCA
Alias Type: Alternate Name
Alias Name: LOS ANGELES UNIFIED SCHOOL DISTRICT
Alias Type: Alternate Name
Alias Name: 2644001900
Alias Type: APN
Alias Name: 304082
Alias Type: Project Code (Site Code)
Alias Name: 19590010
Alias Type: Envirostor ID Number

Completed Info:
Completed Area Name: PROJECT WIDE
Completed Sub Area Name: Not reported
Completed Document Type: Environmental Oversight Agreement
Completed Date: 02/10/2000
Comments: Not reported

Completed Area Name: PROJECT WIDE
Completed Sub Area Name: Not reported
Completed Document Type: Cost Recovery Closeout Memo
Completed Date: 02/26/2004
Comments: Not reported

Completed Area Name: PROJECT WIDE

EAST VALLEY HIGH SCHOOL NO. 2 (Continued) **S107736255**

Completed Sub Area Name:	Not reported
Completed Document Type:	Preliminary Endangerment Assessment Report
Completed Date:	11/30/2001
Comments:	Not reported

Completed Area Name:	PROJECT WIDE
Completed Sub Area Name:	Not reported
Completed Document Type:	Supplemental Site Investigation Report
Completed Date:	08/23/2001
Comments:	Not reported

Future Area Name:	Not reported
Future Sub Area Name:	Not reported
Future Document Type:	Not reported
Future Due Date:	Not reported
Schedule Area Name:	Not reported
Schedule Sub Area Name:	Not reported
Schedule Document Type:	Not reported
Schedule Due Date:	Not reported
Schedule Revised Date:	Not reported

G54 **UNOCAL #6987** **HIST CORTESE** **S101297687**
SE **14200 VAN NUYS BLVD N** **LUST** **N/A**
1/4-1/2 **ARLETA-PACOIMA, CA 91331**
0.264 mi.
1393 ft. **Site 2 of 2 in cluster G**

Relative:
Lower

Actual:
918 ft.

HIST CORTESE:

Region:	CORTESE
Facility County Code:	19
Reg By:	LTNKA
Reg Id:	913311243

LUST:

Region:	STATE
Global Id:	T0603702209
Latitude:	34.251143
Longitude:	-118.4424725
Case Type:	LUST Cleanup Site
Status:	Completed - Case Closed
Status Date:	12/20/1996
Lead Agency:	LOS ANGELES, CITY OF
Case Worker:	EL
Local Agency:	LOS ANGELES, CITY OF
RB Case Number:	913311243
LOC Case Number:	Not reported
File Location:	Not reported
Potential Media Affect:	Soil
Potential Contaminants of Concern:	Gasoline
Site History:	Not reported

Click here to access the California GeoTracker records for this facility:

Contact:

Global Id:	T0603702209
Contact Type:	Local Agency Caseworker
Contact Name:	ELOY LUNA
Organization Name:	LOS ANGELES, CITY OF

UNOCAL #6987 (Continued) **S101297687**

Address: 200 North Main Street, Suite 1780
City: LOS ANGELES
Email: eloy.luna@lacity.org
Phone Number: Not reported

Global Id: T0603702209
Contact Type: Regional Board Caseworker
Contact Name: YUE RONG
Organization Name: LOS ANGELES RWQCB (REGION 4)
Address: 320 W. 4TH ST., SUITE 200
City: Los Angeles
Email: yrong@waterboards.ca.gov
Phone Number: Not reported

Status History:
Global Id: T0603702209
Status: Open - Case Begin Date
Status Date: 01/26/1989

Global Id: T0603702209
Status: Completed - Case Closed
Status Date: 12/20/1996

Global Id: T0603702209
Status: Open - Site Assessment
Status Date: 02/16/1989

Regulatory Activities:
Global Id: T0603702209
Action Type: Other
Date: 01/26/1989
Action: Leak Stopped

Global Id: T0603702209
Action Type: Other
Date: 01/27/1989
Action: Leak Discovery

Global Id: T0603702209
Action Type: Other
Date: 02/03/1989
Action: Leak Reported

LUST REG 4:
Region: 4
Regional Board: 04
County: Los Angeles
Facility Id: 913311243
Status: Case Closed
Substance: Gasoline
Substance Quantity: Not reported
Local Case No: Not reported
Case Type: Soil
Abatement Method Used at the Site: Not reported
Global ID: T0603702209

UNOCAL #6987 (Continued) **S101297687**

W Global ID:	W0602903312	
Staff:	UNK	
Local Agency:	19050	
Cross Street:	BEACHY	
Enforcement Type:	Not reported	
Date Leak Discovered:	1/27/1989	
Date Leak First Reported:		2/3/1989
Date Leak Record Entered:	Not reported	
Date Confirmation Began:	Not reported	
Date Leak Stopped:	1/26/1989	
Date Case Last Changed on Database:		12/20/1996
Date the Case was Closed:		12/20/1996
How Leak Discovered:	Tank Test	
How Leak Stopped:	Not reported	
Cause of Leak:	Corrosion	
Leak Source:	Tank	
Operator:	SARKIAN, MARCEL	
Water System:	WILDMAN MUTUAL WATER COMPANY	
Well Name:	Not reported	
Approx. Dist To Production Well (ft):		9659.776424550378594989539823
Source of Cleanup Funding:		Tank
Preliminary Site Assessment Workplan Submitted:		Not reported
Preliminary Site Assessment Began:		Not reported
Pollution Characterization Began:		2/16/1989
Remediation Plan Submitted:		Not reported
Remedial Action Underway:		Not reported
Post Remedial Action Monitoring Began:		Not reported
Enforcement Action Date:		Not reported
Historical Max MTBE Date:		Not reported
Hist Max MTBE Conc in Groundwater:		Not reported
Hist Max MTBE Conc in Soil:		Not reported
Significant Interim Remedial Action Taken:		Not reported
GW Qualifier:	Not reported	
Soil Qualifier:	Not reported	
Organization:	Not reported	
Owner Contact:	Not reported	
Responsible Party:	UNOCAL CORP.	
RP Address:	3701 WILSHIRE BLVD, LOS ANGELES, CA 90010	
Program:	LUST	
Lat/Long:	34.251143 / -1	
Local Agency Staff:	PEJ	
Beneficial Use:	Not reported	
Priority:	Not reported	
Cleanup Fund Id:	Not reported	
Suspended:	Not reported	
Assigned Name:	1503312-001	
Summary:	LACFD FILE # 04574. TANK TO BE ISOLATED.	

55
East
1/4-1/2
0.284 mi.
1499 ft.

SAN FERNANDO RECYCLING
13950 W VAN NUYS BLVD
ARLETA, CA 91331

SWRCY **S107472747**
N/A

Relative:
Higher

Actual:
942 ft.

SWRCY:

Reg Id:	25952
Cert Id:	RC12858
Mailing Address:	1274 E 55th St
Mailing City:	Los Angeles
Mailing State:	CA
Mailing Zip Code:	90011
Website:	Not reported
Email:	Not reported
Phone Number:	Not reported
Grand Father:	N
Rural:	N
Operation Begin Date:	01/24/2006
Aluminium:	Y
Glass:	Y
Plastic:	Y
Bimetal:	Y
Agency:	N/A
Monday Hours Of Operation:	8:00 am - 6:00 pm
Tuesday Hours Of Operation:	8:00 am - 6:00 pm
Wednesday Hours Of Operation:	8:00 am - 6:00 pm
Thursday Hours Of Operation:	8:00 am - 6:00 pm
Friday Hours Of Operation:	8:00 am - 6:00 pm
Saturday Hours Of Operation:	8:00 am - 6:00 pm
Sunday Hours Of Operation:	8:00 am - 4:00 pm
Organization ID:	19050
Organization Name:	Aquilino Hernandez Recycling

56
South
1/4-1/2
0.331 mi.
1747 ft.

NEXCYCLE
9710 WOODMAN AVE
PACOIMA, CA 91331

SWRCY **S107137187**
HAZNET **N/A**

Relative:
Lower

Actual:
895 ft.

SWRCY:

Reg Id:	169913
Cert Id:	RC169913.001
Mailing Address:	9910 E 6th St
Mailing City:	Rancho Cucamonga
Mailing State:	CA
Mailing Zip Code:	91730
Website:	Not reported
Email:	Not reported
Phone Number:	(909) 796-2210
Grand Father:	N
Rural:	N
Operation Begin Date:	01/16/2013
Aluminium:	Y
Glass:	Y
Plastic:	Y
Bimetal:	Y
Agency:	N/A
Monday Hours Of Operation:	10:00 am - 4:00 pm; Closed 1:00 pm - 2:00 pm
Tuesday Hours Of Operation:	CLOSED

NEXCYCLE (Continued) **S107137187**

Wednesday Hours Of Operation:	10:00 am - 5:00 pm; Closed 1:00 pm - 2:00 pm
Thursday Hours Of Operation:	10:00 am - 5:00 pm; Closed 1:00 pm - 2:00 pm
Friday Hours Of Operation:	10:00 am - 5:00 pm; Closed 1:00 pm - 2:00 pm
Saturday Hours Of Operation:	9:00 am - 4:00 pm; Closed 1:00 pm - 2:00 pm
Sunday Hours Of Operation:	CLOSED
Organization ID:	18826
Organization Name:	Contain-A-Way Inc

HAZNET:

envid:	S107137187
Year:	2013
GEPAID:	CAL000381790
Contact:	ALFRED OROPESA
Telephone:	9518476418
Mailing Name:	Not reported
Mailing Address:	14601B LAKEWOOD BLVD
Mailing City,St,Zip:	PARAMOUNT, CA 907233602
Gen County:	Los Angeles
TSD EPA ID:	AZD081705402
TSD County:	99
Waste Category:	Not reported
Disposal Method:	Storage, Bulking, And/Or Transfer Off Site--No Treatment/Reovery (H010-H129) Or (H131-H135)
Tons:	0.0005
Facility County:	Not reported

envid:	S107137187
Year:	2013
GEPAID:	CAL000381790
Contact:	ALFRED OROPESA
Telephone:	9518476418
Mailing Name:	Not reported
Mailing Address:	14601B LAKEWOOD BLVD
Mailing City,St,Zip:	PARAMOUNT, CA 907233602
Gen County:	Los Angeles
TSD EPA ID:	AZD081705402
TSD County:	99
Waste Category:	Not reported
Disposal Method:	Storage, Bulking, And/Or Transfer Off Site--No Treatment/Reovery (H010-H129) Or (H131-H135)
Tons:	0.003
Facility County:	Not reported

---

57 **UNOCAL #5704** **HIST CORTESE** **S101297686**
East **13812 VAN NUYS BLVD** **LUST** **N/A**
1/4-1/2 **PACOIMA, CA 91331**
0.428 mi.
2259 ft.

Relative:
Higher

Actual:
952 ft.

HIST CORTESE:

Region:	CORTESE
Facility County Code:	19
Reg By:	LTNKA
Reg Id:	913311143

LUST:

Region:	STATE

UNOCAL #5704 (Continued) **S101297686**

Global Id:	T0603702199
Latitude:	34.2574867
Longitude:	-118.4337372
Case Type:	LUST Cleanup Site
Status:	Completed - Case Closed
Status Date:	07/01/1998
Lead Agency:	LOS ANGELES, CITY OF
Case Worker:	EL
Local Agency:	LOS ANGELES, CITY OF
RB Case Number:	913311143
LOC Case Number:	Not reported
File Location:	Not reported
Potential Media Affect:	Soil
Potential Contaminants of Concern:	Gasoline
Site History:	Not reported

Click here to access the California GeoTracker records for this facility:

Contact:

Global Id:	T0603702199
Contact Type:	Regional Board Caseworker
Contact Name:	YUE RONG
Organization Name:	LOS ANGELES RWQCB (REGION 4)
Address:	320 W. 4TH ST., SUITE 200
City:	Los Angeles
Email:	yrong@waterboards.ca.gov
Phone Number:	Not reported

Global Id:	T0603702199
Contact Type:	Local Agency Caseworker
Contact Name:	ELOY LUNA
Organization Name:	LOS ANGELES, CITY OF
Address:	200 North Main Street, Suite 1780
City:	LOS ANGELES
Email:	eloy.luna@lacity.org
Phone Number:	Not reported

Status History:

Global Id:	T0603702199
Status:	Open - Case Begin Date
Status Date:	03/28/1989

Global Id:	T0603702199
Status:	Completed - Case Closed
Status Date:	07/01/1998

Global Id:	T0603702199
Status:	Open - Site Assessment
Status Date:	05/19/1989

Regulatory Activities:

Global Id:	T0603702199
Action Type:	Other
Date:	03/28/1989
Action:	Leak Stopped

Global Id:	T0603702199

UNOCAL #5704 (Continued) **S101297686**

Action Type:	Other
Date:	03/28/1989
Action:	Leak Discovery
Global Id:	T0603702199
Action Type:	Other
Date:	04/20/1989
Action:	Leak Reported

LUST REG 4:

Region:	4
Regional Board:	04
County:	Los Angeles
Facility Id:	913311143
Status:	Case Closed
Substance:	Gasoline
Substance Quantity:	Not reported
Local Case No:	Not reported
Case Type:	Soil
Abatement Method Used at the Site:	Not reported
Global ID:	T0603702199
W Global ID:	Not reported
Staff:	UNK
Local Agency:	19050
Cross Street:	INTERSTATE #5
Enforcement Type:	Not reported
Date Leak Discovered:	3/28/1989
Date Leak First Reported:	4/20/1989
Date Leak Record Entered:	Not reported
Date Confirmation Began:	Not reported
Date Leak Stopped:	3/28/1989
Date Case Last Changed on Database:	7/1/1998
Date the Case was Closed:	7/1/1998
How Leak Discovered:	Tank Closure
How Leak Stopped:	Not reported
Cause of Leak:	UNK
Leak Source:	UNK
Operator:	AHMADI,MEDHI
Water System:	Not reported
Well Name:	Not reported
Approx. Dist To Production Well (ft):	11558.5026035801071204604671 22
Source of Cleanup Funding:	UNK
Preliminary Site Assessment Workplan Submitted:	Not reported
Preliminary Site Assessment Began:	Not reported
Pollution Characterization Began:	5/19/1989
Remediation Plan Submitted:	Not reported
Remedial Action Underway:	Not reported
Post Remedial Action Monitoring Began:	Not reported
Enforcement Action Date:	Not reported
Historical Max MTBE Date:	Not reported
Hist Max MTBE Conc in Groundwater:	Not reported
Hist Max MTBE Conc in Soil:	Not reported
Significant Interim Remedial Action Taken:	Not reported
GW Qualifier:	Not reported
Soil Qualifier:	Not reported
Organization:	Not reported

UNOCAL #5704 (Continued) **S101297686**

Owner Contact:	Not reported
Responsible Party:	UNOCAL CORPORATION
RP Address:	3701 WILSHIRE BLVD, STE 800, LOS ANGELES, CA 90010
Program:	LUST
Lat/Long:	34.2574867 / -1
Local Agency Staff:	PEJ
Beneficial Use:	Not reported
Priority:	Not reported
Cleanup Fund Id:	Not reported
Suspended:	Not reported
Assigned Name:	Not reported
Summary:	CONTAMINATION PROBLEM CONFIRMED 4/20/89.

58
ENE
1/4-1/2
0.493 mi.
2604 ft.

L A RECYCLING
10455 LAUREL CANYON BLVD
PACOIMA, CA 91352

SWRCY **S111023808**
N/A

Relative:
Higher

Actual:
967 ft.

SWRCY:

Reg Id:	141448
Cert Id:	RC141448.001
Mailing Address:	4804 Laurel Canyon Blvd Apt 1037
Mailing City:	Studio City
Mailing State:	CA
Mailing Zip Code:	91607
Website:	Not reported
Email:	jorgelopez@larecycling.org
Phone Number:	(818) 577-6368
Grand Father:	N
Rural:	N
Operation Begin Date:	05/21/2011
Aluminium:	Y
Glass:	Y
Plastic:	Y
Bimetal:	Y
Agency:	N/A
Monday Hours Of Operation:	8:30 am - 5:00 pm
Tuesday Hours Of Operation:	8:30 am - 5:00 pm
Wednesday Hours Of Operation:	8:30 am - 5:00 pm
Thursday Hours Of Operation:	8:30 am - 5:00 pm
Friday Hours Of Operation:	8:30 am - 5:00 pm
Saturday Hours Of Operation:	8:30 am - 5:00 pm
Sunday Hours Of Operation:	8:30 am - 3:00 pm
Organization ID:	137827
Organization Name:	L A Recycling LLC

59 ENE 1/2-1 0.514 mi. 2714 ft. | **LOUIES CLEANERS 10427 LAUREL CANYON PACOIMA, CA 91331** | **RCRA-SQG FINDS HAZNET ENVIROSTOR** | **1000249631 CAD981625197**

Relative: Higher

Actual: 964 ft.

RCRA-SQG:

Date form received by agency:	09/01/1996
Facility name:	LOUIES CLEANERS
Facility address:	10427 LAUREL CANYON PACOIMA, CA 91331
EPA ID:	CAD981625197
Mailing address:	LAUREL CANYON PACOIMA, CA 91331
Contact:	Not reported
Contact address:	Not reported Not reported
Contact country:	Not reported
Contact telephone:	Not reported
Contact email:	Not reported
EPA Region:	09
Classification:	Small Small Quantity Generator
Description:	Handler: generates more than 100 and less than 1000 kg of hazardous waste during any calendar month and accumulates less than 6000 kg of hazardous waste at any time; or generates 100 kg or less of hazardous waste during any calendar month, and accumulates more than 1000 kg of hazardous waste at any time

Owner/Operator Summary:

Owner/operator name:	LOUIE RODRIGUEZ
Owner/operator address:	NOT REQUIRED NOT REQUIRED, ME 99999
Owner/operator country:	Not reported
Owner/operator telephone:	(415) 555-1212
Legal status:	Private
Owner/Operator Type:	Owner
Owner/Op start date:	Not reported
Owner/Op end date:	Not reported

Owner/operator name:	NOT REQUIRED
Owner/operator address:	NOT REQUIRED NOT REQUIRED, ME 99999
Owner/operator country:	Not reported
Owner/operator telephone:	(415) 555-1212
Legal status:	Private
Owner/Operator Type:	Operator
Owner/Op start date:	Not reported
Owner/Op end date:	Not reported

Handler Activities Summary:

U.S. importer of hazardous waste:	No
Mixed waste (haz. and radioactive):	No
Recycler of hazardous waste:	No
Transporter of hazardous waste:	No
Treater, storer or disposer of HW:	No
Underground injection activity:	No
On-site burner exemption:	No
Furnace exemption:	No

LOUIES CLEANERS (Continued) **1000249631**

Used oil fuel burner: No
Used oil processor: No
User oil refiner: No
Used oil fuel marketer to burner: No
Used oil Specification marketer: No
Used oil transfer facility: No
Used oil transporter: No

Violation Status: No violations found

FINDS:

Registry ID: 110002728638

Environmental Interest/Information System
RCRAInfo is a national information system that supports the Resource Conservation and Recovery Act (RCRA) program through the tracking of events and activities related to facilities that generate, transport, and treat, store, or dispose of hazardous waste. RCRAInfo allows RCRA program staff to track the notification, permit, compliance, and corrective action activities required under RCRA.

HAZNET:
envid: 1000249631
Year: 2008
GEPAID: CAD981625197
Contact: EMERIE GRAMAJO/MANAGER
Telephone: 8182980549
Mailing Name: Not reported
Mailing Address: 10427 LAUREL CANYON BLVD
Mailing City,St,Zip: PACOIMA, CA 913310000
Gen County: Not reported
TSD EPA ID: NVR000076158
TSD County: Not reported
Waste Category: Halogenated solvents (chloroforms, methyl chloride, perchloroethylene, etc)
Disposal Method: Solvents Recovery
Tons: 0.25
Facility County: Los Angeles

envid: 1000249631
Year: 2008
GEPAID: CAD981625197
Contact: EMERIE GRAMAJO/MANAGER
Telephone: 8182980549
Mailing Name: Not reported
Mailing Address: 10427 LAUREL CANYON BLVD
Mailing City,St,Zip: PACOIMA, CA 913310000
Gen County: Not reported
TSD EPA ID: NVR000076158
TSD County: Not reported
Waste Category: Halogenated solvents (chloroforms, methyl chloride, perchloroethylene, etc)
Disposal Method: Solvents Recovery
Tons: 0.25
Facility County: Los Angeles

LOUIES CLEANERS (Continued) **1000249631**

envid: 1000249631
Year: 2007
GEPAID: CAD981625197
Contact: EMERIE GRAMAJO/MANAGER
Telephone: 8182980549
Mailing Name: Not reported
Mailing Address: 10427 LAUREL CANYON BLVD
Mailing City,St,Zip: PACOIMA, CA 913310000
Gen County: Not reported
TSD EPA ID: NVR000076158
TSD County: Not reported
Waste Category: Hydrocarbon solvents (benzene, hexane, Stoddard, Etc.)
Disposal Method: Solvents Recovery
Tons: Not reported
Facility County: Los Angeles

envid: 1000249631
Year: 2007
GEPAID: CAD981625197
Contact: EMERIE GRAMAJO/MANAGER
Telephone: 8182980549
Mailing Name: Not reported
Mailing Address: 10427 LAUREL CANYON BLVD
Mailing City,St,Zip: PACOIMA, CA 913310000
Gen County: Not reported
TSD EPA ID: NVR000076158
TSD County: Not reported
Waste Category: Aqueous solution with total organic residues less than 10 percent
Disposal Method: Solvents Recovery
Tons: Not reported
Facility County: Los Angeles

envid: 1000249631
Year: 2007
GEPAID: CAD981625197
Contact: EMERIE GRAMAJO/MANAGER
Telephone: 8182980549
Mailing Name: Not reported
Mailing Address: 10427 LAUREL CANYON BLVD
Mailing City,St,Zip: PACOIMA, CA 913310000
Gen County: Not reported
TSD EPA ID: NVR000076158
TSD County: Not reported
Waste Category: Aqueous solution with total organic residues less than 10 percent
Disposal Method: Solvents Recovery
Tons: Not reported
Facility County: Los Angeles

Click this hyperlink while viewing on your computer to access
33 additional CA_HAZNET: record(s) in the EDR Site Report.

ENVIROSTOR:
Facility ID: 60001501
Status: Refer: Local Agency
Status Date: 06/27/2013
Site Code: 301511
Site Type: Evaluation

LOUIES CLEANERS (Continued) **1000249631**

Site Type Detailed:	Evaluation
Acres:	0.36
NPL:	NO
Regulatory Agencies:	SMBRP
Lead Agency:	SMBRP
Program Manager:	Manjul Bose
Supervisor:	Javier Hinojosa
Division Branch:	Cleanup Chatsworth
Assembly:	Not reported
Senate:	Not reported
Special Program:	EPA - PASI
Restricted Use:	NO
Site Mgmt Req:	NONE SPECIFIED
Funding:	EPA Grant
Latitude:	0
Longitude:	0
APN:	NONE SPECIFIED
Past Use:	NONE SPECIFIED
Potential COC:	NONE SPECIFIED
Confirmed COC:	NONE SPECIFIED
Potential Description:	NONE SPECIFIED
Alias Name:	301511
Alias Type:	Project Code (Site Code)
Alias Name:	60001501
Alias Type:	Envirostor ID Number

Completed Info:

Completed Area Name:	Not reported
Completed Sub Area Name:	Not reported
Completed Document Type:	Not reported
Completed Date:	Not reported
Comments:	Not reported
Future Area Name:	Not reported
Future Sub Area Name:	Not reported
Future Document Type:	Not reported
Future Due Date:	Not reported
Schedule Area Name:	Not reported
Schedule Sub Area Name:	Not reported
Schedule Document Type:	Not reported
Schedule Due Date:	Not reported
Schedule Revised Date:	Not reported

---

60 **VANCRAFT INC** **NPDES** **S106102854**
NE **11263 ILEX AV** **EMI** **N/A**
1/2-1 **PACOIMA, CA 91331** **ENVIROSTOR**
0.714 mi. **WDS**
3771 ft.

Relative:
Higher

Actual:
1040 ft.

NPDES:

Npdes Number:	CAS000001
Facility Status:	Active
Agency Id:	0
Region:	4
Regulatory Measure Id:	190247
Order No:	97-03-DWQ
Regulatory Measure Type:	Enrollee
Place Id:	Not reported

VANCRAFT INC (Continued) **S106102854**

WDID:	4 19I011986
Program Type:	Industrial
Adoption Date Of Regulatory Measure:	Not reported
Effective Date Of Regulatory Measure:	11/14/1995
Expiration Date Of Regulatory Measure:	Not reported
Termination Date Of Regulatory Measure:	Not reported
Discharge Name:	TEC Processing Co
Discharge Address:	11263 Ilex Ave
Discharge City:	Pacoima
Discharge State:	California
Discharge Zip:	91331

EMI:

Year:	1987
County Code:	19
Air Basin:	SC
Facility ID:	7102
Air District Name:	SC
SIC Code:	2434
Air District Name:	SOUTH COAST AQMD
Community Health Air Pollution Info System:	Not reported
Consolidated Emission Reporting Rule:	Not reported
Total Organic Hydrocarbon Gases Tons/Yr:	2
Reactive Organic Gases Tons/Yr:	2
Carbon Monoxide Emissions Tons/Yr:	0
NOX - Oxides of Nitrogen Tons/Yr:	0
SOX - Oxides of Sulphur Tons/Yr:	0
Particulate Matter Tons/Yr:	0
Part. Matter 10 Micrometers & Smllr Tons/Yr:	0

ENVIROSTOR:

Facility ID:	60001265
Status:	Inactive - Action Required
Status Date:	06/27/2013
Site Code:	301461
Site Type:	Evaluation
Site Type Detailed:	Evaluation
Acres:	0.5
NPL:	NO
Regulatory Agencies:	SMBRP
Lead Agency:	SMBRP
Program Manager:	Not reported
Supervisor:	Javier Hinojosa
Division Branch:	Cleanup Chatsworth
Assembly:	39
Senate:	20
Special Program:	Not reported
Restricted Use:	NO
Site Mgmt Req:	NONE SPECIFIED
Funding:	EPA Grant
Latitude:	34.27449
Longitude:	-118.4331
APN:	2616020011
Past Use:	UNKNOWN
Potential COC:	Under Investigation Tetrachloroethylene (PCE
Confirmed COC:	30022-NO 31001-NO

VANCRAFT INC (Continued) **S106102854**

Potential Description: AQUI, IA, SOIL, SV, UE
Alias Name: 2616020011
Alias Type: APN
Alias Name: CAN000908972
Alias Type: CERCLIS ID
Alias Name: CAL000068269
Alias Type: EPA Identification Number
Alias Name: 301461
Alias Type: Project Code (Site Code)
Alias Name: 60001265
Alias Type: Envirostor ID Number

Completed Info:
Completed Area Name: PROJECT WIDE
Completed Sub Area Name: Not reported
Completed Document Type: Site Screening
Completed Date: 09/09/2010
Comments: Screening was signed and dated June 9, 2010

Future Area Name: Not reported
Future Sub Area Name: Not reported
Future Document Type: Not reported
Future Due Date: Not reported
Schedule Area Name: Not reported
Schedule Sub Area Name: Not reported
Schedule Document Type: Not reported
Schedule Due Date: Not reported
Schedule Revised Date: Not reported

Facility ID: 71003276
Status: Refer: Other Agency
Status Date: Not reported
Site Code: Not reported
Site Type: Tiered Permit
Site Type Detailed: Tiered Permit
Acres: Not reported
NPL: NO
Regulatory Agencies: NONE SPECIFIED
Lead Agency: NONE SPECIFIED
Program Manager: Not reported
Supervisor: Not reported
Division Branch: Cleanup Chatsworth
Assembly: 39
Senate: 20
Special Program: Not reported
Restricted Use: NO
Site Mgmt Req: NONE SPECIFIED
Funding: Not reported
Latitude: 34.27440
Longitude: -118.4333
APN: NONE SPECIFIED
Past Use: NONE SPECIFIED
Potential COC: NONE SPECIFIED
Confirmed COC: NONE SPECIFIED
Potential Description: NONE SPECIFIED
Alias Name: CAL000068269
Alias Type: EPA Identification Number
Alias Name: 71003276

VANCRAFT INC (Continued) **S106102854**

Alias Type: Envirostor ID Number

Completed Info:
Completed Area Name: Not reported
Completed Sub Area Name: Not reported
Completed Document Type: Not reported
Completed Date: Not reported
Comments: Not reported

Future Area Name: Not reported
Future Sub Area Name: Not reported
Future Document Type: Not reported
Future Due Date: Not reported
Schedule Area Name: Not reported
Schedule Sub Area Name: Not reported
Schedule Document Type: Not reported
Schedule Due Date: Not reported
Schedule Revised Date: Not reported

CA WDS:
Facility ID: 4 19I011986
Facility Type: Other - Does not fall into the category of Municipal/Domestic, Industrial, Agricultural or Solid Waste (Class I, II or III)
Facility Status: Active - Any facility with a continuous or seasonal discharge that is under Waste Discharge Requirements.
NPDES Number: CAS000001 The 1st 2 characters designate the state. The remaining 7 are assigned by the Regional Board
Subregion: 4
Facility Telephone: 8188976575
Facility Contact: Victor Rivera
Agency Name: TEC PROCESSING COMPANY
Agency Address: 11263 Ilex Avenue
Agency City,St,Zip: Pacoima 91331
Agency Contact: Victor Rivera
Agency Telephone: 8188976575
Agency Type: Private
SIC Code: 3471
SIC Code 2: Not reported
Primary Waste Type: Not reported
Primary Waste: Not reported
Waste Type2: Not reported
Waste2: Not reported
Primary Waste Type: Not reported
Secondary Waste: Not reported
Secondary Waste Type: Not reported
Design Flow: 0
Baseline Flow: 0
Reclamation: No reclamation requirements associated with this facility.
POTW: The facility is not a POTW.
Treat To Water: Minor Threat to Water Quality. A violation of a regional board order should cause a relatively minor impairment of beneficial uses compared to a major or minor threat. Not: All nurds without a TTWQ will be considered a minor threat to water quality unless coded at a higher Level. A Zero (0) may be used to code those NURDS that are found to represent no threat to water quality.
Complexity: Category C - Facilities having no waste treatment systems, such as cooling water dischargers or thosewho must comply through best

VANCRAFT INC (Continued) **S106102854**

management practices, facilities with passive waste treatment and disposal systems, such as septic systems with subsurface disposal, or dischargers having waste storage systems with land disposal such as dairy waste ponds.

---

61 West 1/2-1 0.724 mi. 3825 ft.

VALUE CLEANERS
10345 SEPULVEDA
MISSION HILLS, CA 91345

RCRA-SQG **1000424508**
FINDS **CAD981672975**
HAZNET
ENVIROSTOR

Relative: Lower

Actual: 914 ft.

RCRA-SQG:

Date form received by agency:	09/01/1996
Facility name:	VALUE CLEANERS
Facility address:	10345 SEPULVEDA MISSION HILLS, CA 91345
EPA ID:	CAD981672975
Contact:	Not reported
Contact address:	Not reported Not reported
Contact country:	Not reported
Contact telephone:	Not reported
Contact email:	Not reported
EPA Region:	09
Land type:	Facility is not located on Indian land. Additional information is not known.
Classification:	Small Small Quantity Generator
Description:	Handler: generates more than 100 and less than 1000 kg of hazardous waste during any calendar month and accumulates less than 6000 kg of hazardous waste at any time; or generates 100 kg or less of hazardous waste during any calendar month, and accumulates more than 1000 kg of hazardous waste at any time

Owner/Operator Summary:

Owner/operator name:	NOT REQUIRED
Owner/operator address:	NOT REQUIRED NOT REQUIRED, ME 99999
Owner/operator country:	Not reported
Owner/operator telephone:	(415) 555-1212
Legal status:	Private
Owner/Operator Type:	Operator
Owner/Op start date:	Not reported
Owner/Op end date:	Not reported

Owner/operator name:	VARTAN POLADIAN OWNER
Owner/operator address:	NOT REQUIRED NOT REQUIRED, ME 99999
Owner/operator country:	Not reported
Owner/operator telephone:	(415) 555-1212
Legal status:	Private
Owner/Operator Type:	Owner
Owner/Op start date:	Not reported
Owner/Op end date:	Not reported

Handler Activities Summary:

U.S. importer of hazardous waste:	No
Mixed waste (haz. and radioactive):	No
Recycler of hazardous waste:	No

VALUE CLEANERS (Continued) **1000424508**

Transporter of hazardous waste: No
Treater, storer or disposer of HW: No
Underground injection activity: No
On-site burner exemption: No
Furnace exemption: No
Used oil fuel burner: No
Used oil processor: No
User oil refiner: No
Used oil fuel marketer to burner: No
Used oil Specification marketer: No
Used oil transfer facility: No
Used oil transporter: No

Historical Generators:
Date form received by agency: 11/25/1986
Site name: VALUE CLEANERS
Classification: Large Quantity Generator

Violation Status: No violations found

Evaluation Action Summary:
Evaluation date: 04/29/1994
Evaluation: COMPLIANCE EVALUATION INSPECTION ON-SITE
Area of violation: Not reported
Date achieved compliance: Not reported
Evaluation lead agency: State Contractor/Grantee

FINDS:

Registry ID: 110002745352

Environmental Interest/Information System
RCRAInfo is a national information system that supports the Resource Conservation and Recovery Act (RCRA) program through the tracking of events and activities related to facilities that generate, transport, and treat, store, or dispose of hazardous waste. RCRAInfo allows RCRA program staff to track the notification, permit, compliance, and corrective action activities required under RCRA.

HAZNET:
envid: 1000424508
Year: 1997
GEPAID: CAD981672975
Contact: Not reported
Telephone: 0000000000
Mailing Name: Not reported
Mailing Address: 10345 SEPULVEDA BLVD
Mailing City,St,Zip: MISSION HILLS, CA 913452421
Gen County: Not reported
TSD EPA ID: CAT000613893
TSD County: Not reported
Waste Category: Halogenated solvents (chloroforms, methyl chloride, perchloroethylene, etc)
Disposal Method: Transfer Station
Tons: .2920

VALUE CLEANERS (Continued) **1000424508**

Facility County: Los Angeles

envid: 1000424508
Year: 1996
GEPAID: CAD981672975
Contact: Not reported
Telephone: 0000000000
Mailing Name: Not reported
Mailing Address: 10345 SEPULVEDA BLVD
Mailing City,St,Zip: MISSION HILLS, CA 913452421
Gen County: Not reported
TSD EPA ID: CAT000613893
TSD County: Not reported
Waste Category: Liquids with halogenated organic compounds >= 1,000 Mg./L
Disposal Method: Transfer Station
Tons: .7800
Facility County: Los Angeles

envid: 1000424508
Year: 1995
GEPAID: CAD981672975
Contact: Not reported
Telephone: 0000000000
Mailing Name: Not reported
Mailing Address: 10345 SEPULVEDA BLVD
Mailing City,St,Zip: MISSION HILLS, CA 913452421
Gen County: Not reported
TSD EPA ID: CAT000613893
TSD County: Not reported
Waste Category: Not reported
Disposal Method: Transfer Station
Tons: .3020
Facility County: Los Angeles

envid: 1000424508
Year: 1995
GEPAID: CAD981672975
Contact: Not reported
Telephone: 0000000000
Mailing Name: Not reported
Mailing Address: 10345 SEPULVEDA BLVD
Mailing City,St,Zip: MISSION HILLS, CA 913452421
Gen County: Not reported
TSD EPA ID: CAD981397417
TSD County: Not reported
Waste Category: Halogenated solvents (chloroforms, methyl chloride, perchloroethylene, etc)
Disposal Method: Recycler
Tons: .1668
Facility County: Los Angeles

envid: 1000424508
Year: 1995
GEPAID: CAD981672975
Contact: Not reported
Telephone: 0000000000
Mailing Name: Not reported

VALUE CLEANERS (Continued) **1000424508**

Mailing Address: 10345 SEPULVEDA BLVD
Mailing City,St,Zip: MISSION HILLS, CA 913452421
Gen County: Not reported
TSD EPA ID: CAD981397417
TSD County: Not reported
Waste Category: Not reported
Disposal Method: Recycler
Tons: .0000
Facility County: Los Angeles

Click this hyperlink while viewing on your computer to access
4 additional CA_HAZNET: record(s) in the EDR Site Report.

ENVIROSTOR:
Facility ID: 19720059
Status: Refer: 1248 Local Agency
Status Date: 01/03/2003
Site Code: Not reported
Site Type: Evaluation
Site Type Detailed: Evaluation
Acres: Not reported
NPL: NO
Regulatory Agencies: NONE SPECIFIED
Lead Agency: NONE SPECIFIED
Program Manager: Not reported
Supervisor: Referred - Not Assigned
Division Branch: Cleanup Cypress
Assembly: 39
Senate: 20
Special Program: Not reported
Restricted Use: NO
Site Mgmt Req: NONE SPECIFIED
Funding: Not Applicable
Latitude: 0
Longitude: 0
APN: NONE SPECIFIED
Past Use: NONE SPECIFIED
Potential COC: NONE SPECIFIED
Confirmed COC: NONE SPECIFIED
Potential Description: NONE SPECIFIED
Alias Name: 19720059
Alias Type: Envirostor ID Number

Completed Info:
Completed Area Name: Not reported
Completed Sub Area Name: Not reported
Completed Document Type: Not reported
Completed Date: Not reported
Comments: Not reported

Future Area Name: Not reported
Future Sub Area Name: Not reported
Future Document Type: Not reported
Future Due Date: Not reported
Schedule Area Name: Not reported
Schedule Sub Area Name: Not reported
Schedule Document Type: Not reported

VALUE CLEANERS (Continued) **1000424508**

Schedule Due Date: Not reported
Schedule Revised Date: Not reported

H62
NE
1/2-1
0.733 mi.
3872 ft.

Relative:
Higher

Actual:
1041 ft.

AMERICAN ETCHING AND MFG.
13730 DESMOND ST
PACOIMA, CA 91331

Site 1 of 2 in cluster H

CERC-NFRAP **1000360637**
CORRACTS **CAD064573405**
RCRA-LQG
NPDES
HIST CORTESE
LUST
CA FID UST
SLIC
HIST UST
SWEEPS UST
WIP
ENF
HAZNET
ENVIROSTOR
HWP
WDS

CERC-NFRAP:
Site ID: 0900269
Federal Facility: Not a Federal Facility
NPL Status: Not on the NPL
Non NPL Status: NFRAP-Site does not qualify for the NPL based on existing information

CERCLIS-NFRAP Site Contact Details:
Contact Sequence ID: 13287888.00000
Person ID: 13003854.00000

Contact Sequence ID: 13293483.00000
Person ID: 13003858.00000

Contact Sequence ID: 13299341.00000
Person ID: 13004003.00000

CERCLIS-NFRAP Site Alias Name(s):
Alias Name: AMERICAN CHEM ETCHING CO
Alias Address: Not reported
CA

Program Priority:
Description: RCRA Deferral Audit

Description: RCRA Deferral - New Decision

Description: RCRA Deferral - Further Superfund Assessment

CERCLIS-NFRAP Assessment History:
Action: ARCHIVE SITE
Date Started: / /
Date Completed: 01/23/96
Priority Level: Not reported

Action: DISCOVERY
Date Started: / /

AMERICAN ETCHING AND MFG. (Continued) **1000360637**

Date Completed: 08/24/90
Priority Level: Not reported

Action: PRELIMINARY ASSESSMENT
Date Started: / /
Date Completed: 03/26/91
Priority Level: Deferred to RCRA (Subtitle C)

CORRACTS:

EPA ID: CAD064573405
EPA Region: 09
Area Name: ENTIRE FACILITY
Actual Date: 19910326
Action: CA075ME - CA Prioritization, Facility or area was assigned a medium corrective action priority
NAICS Code(s): 332999 332813
All Other Miscellaneous Fabricated Metal Product Manufacturing
Electroplating, Plating, Polishing, Anodizing, and Coloring
Original schedule date: Not reported
Schedule end date: Not reported

RCRA-LQG:
Date form received by agency: 04/17/2012
Facility name: AMERICAN ETCHING AND MFG.
Facility address: 13730 DESMOND ST
PACOIMA, CA 91331
EPA ID: CAD064573405
Mailing address: DESMOND ST
PACOIMA, CA 91331
Contact: GARY KIPKA
Contact address: DESMOND ST
PACOIMA, CA 91331
Contact country: Not reported
Contact telephone: (818) 896-1187
Telephone ext.: 1
Contact email: BRIMAN500@NETZERO.NET
EPA Region: 09
Land type: Private
Classification: Large Quantity Generator
Description: Handler: generates 1,000 kg or more of hazardous waste during any calendar month; or generates more than 1 kg of acutely hazardous waste during any calendar month; or generates more than 100 kg of any residue or contaminated soil, waste or other debris resulting from the cleanup of a spill, into or on any land or water, of acutely hazardous waste during any calendar month; or generates 1 kg or less of acutely hazardous waste during any calendar month, and accumulates more than 1 kg of acutely hazardous waste at any time; or generates 100 kg or less of any residue or contaminated soil, waste or other debris resulting from the cleanup of a spill, into or on any land or water, of acutely hazardous waste during any calendar month, and accumulates more than 100 kg of that material at any time

Owner/Operator Summary:
Owner/operator name: AMERICAN ETCHING AND MFG

AMERICAN ETCHING AND MFG. (Continued) **1000360637**

Owner/operator address: DESMOND ST
PACOIMA, CA 91331
Owner/operator country: Not reported
Owner/operator telephone: (818) 896-1187
Legal status: Private
Owner/Operator Type: Owner
Owner/Op start date: 03/01/1993
Owner/Op end date: Not reported

Owner/operator name: AMERICAN ETCHING AND MFG.
Owner/operator address: DESMOND ST
PACOIMA, CA 91331
Owner/operator country: Not reported
Owner/operator telephone: 8188961187 1
Legal status: Private
Owner/Operator Type: Operator
Owner/Op start date: 01/01/1993
Owner/Op end date: Not reported

Handler Activities Summary:
U.S. importer of hazardous waste: No
Mixed waste (haz. and radioactive): No
Recycler of hazardous waste: No
Transporter of hazardous waste: No
Treater, storer or disposer of HW: No
Underground injection activity: No
On-site burner exemption: No
Furnace exemption: No
Used oil fuel burner: No
Used oil processor: No
User oil refiner: No
Used oil fuel marketer to burner: No
Used oil Specification marketer: No
Used oil transfer facility: No
Used oil transporter: No

Historical Generators:
Date form received by agency: 02/23/2010
Site name: AMERICAN ETCHING AND MFG
Classification: Large Quantity Generator

Date form received by agency: 01/22/2008
Site name: AMERICAN ETCHING AND MFG.
Classification: Large Quantity Generator

Date form received by agency: 02/15/2006
Site name: AMERICAN ETCHING AND MFG
Classification: Large Quantity Generator

Date form received by agency: 02/19/2004
Site name: AMERICAN ETCHING AND MFG
Classification: Large Quantity Generator

Date form received by agency: 02/05/2002
Site name: AMERICAN ETCHING AND MFG
Classification: Large Quantity Generator

AMERICAN ETCHING AND MFG. (Continued) **1000360637**

Date form received by agency: 10/12/2000
Site name: AMERICAN ETCHING AND MANUFACTURING
Classification: Large Quantity Generator

Date form received by agency: 03/04/1999
Site name: AMERICAN ETCHING AND MFG.
Classification: Large Quantity Generator

Date form received by agency: 09/01/1996
Site name: AMERICAN ETCHING AND MFG
Classification: Large Quantity Generator

Date form received by agency: 02/16/1996
Site name: AMERICAN ETCHING AND MFG
Classification: Large Quantity Generator

Date form received by agency: 03/17/1994
Site name: AMERICAN ETCHING AND MFG.
Classification: Large Quantity Generator

Date form received by agency: 09/21/1992
Site name: AMERICAN ETCHING AND MFG
Classification: Large Quantity Generator

Date form received by agency: 02/29/1992
Site name: AMERICAN ETCHING & MFG.
Classification: Large Quantity Generator

Date form received by agency: 03/20/1990
Site name: AMERICAN ETCHING AND MANUFACTURING
Classification: Large Quantity Generator

Hazardous Waste Summary:
Waste code: 171
Waste name: 171

Waste code: 792
Waste name: 792

Waste code: D002
Waste name: A WASTE WHICH HAS A PH OF LESS THAN 2 OR GREATER THAN 12.5 IS CONSIDERED TO BE A CORROSIVE HAZARDOUS WASTE. SODIUM HYDROXIDE, A CAUSTIC SOLUTION WITH A HIGH PH, IS OFTEN USED BY INDUSTRIES TO CLEAN OR DEGREASE PARTS. HYDROCHLORIC ACID, A SOLUTION WITH A LOW PH, IS USED BY MANY INDUSTRIES TO CLEAN METAL PARTS PRIOR TO PAINTING. WHEN THESE CAUSTIC OR ACID SOLUTIONS BECOME CONTAMINATED AND MUST BE DISPOSED, THE WASTE WOULD BE A CORROSIVE HAZARDOUS WASTE.

Waste code: D007
Waste name: CHROMIUM

Waste code: F006
Waste name: WASTEWATER TREATMENT SLUDGES FROM ELECTROPLATING OPERATIONS EXCEPT FROM THE FOLLOWING PROCESSES: (1) SULFURIC ACID ANODIZING OF ALUMINUM; (2) TIN PLATING ON CARBON STEEL; (3) ZINC PLATING (SEGREGATED BASIS) ON CARBON STEEL; (4) ALUMINUM OR ZINC-ALUMINUM PLATING ON CARBON STEEL; (5) CLEANING/STRIPPING ASSOCIATED WITH TIN, ZINC AND ALUMINUM

AMERICAN ETCHING AND MFG. (Continued) **1000360637**

PLATING ON CARBON STEEL; AND (6) CHEMICAL ETCHING AND MILLING OF ALUMINUM.

Waste code: 171
Waste name: 171

Waste code: 181
Waste name: 181

Waste code: 792
Waste name: 792

Waste code: D002
Waste name: A WASTE WHICH HAS A PH OF LESS THAN 2 OR GREATER THAN 12.5 IS CONSIDERED TO BE A CORROSIVE HAZARDOUS WASTE. SODIUM HYDROXIDE, A CAUSTIC SOLUTION WITH A HIGH PH, IS OFTEN USED BY INDUSTRIES TO CLEAN OR DEGREASE PARTS. HYDROCHLORIC ACID, A SOLUTION WITH A LOW PH, IS USED BY MANY INDUSTRIES TO CLEAN METAL PARTS PRIOR TO PAINTING. WHEN THESE CAUSTIC OR ACID SOLUTIONS BECOME CONTAMINATED AND MUST BE DISPOSED, THE WASTE WOULD BE A CORROSIVE HAZARDOUS WASTE.

Waste code: D007
Waste name: CHROMIUM

Waste code: D008
Waste name: LEAD

Waste code: F006
Waste name: WASTEWATER TREATMENT SLUDGES FROM ELECTROPLATING OPERATIONS EXCEPT FROM THE FOLLOWING PROCESSES: (1) SULFURIC ACID ANODIZING OF ALUMINUM; (2) TIN PLATING ON CARBON STEEL; (3) ZINC PLATING (SEGREGATED BASIS) ON CARBON STEEL; (4) ALUMINUM OR ZINC-ALUMINUM PLATING ON CARBON STEEL; (5) CLEANING/STRIPPING ASSOCIATED WITH TIN, ZINC AND ALUMINUM PLATING ON CARBON STEEL; AND (6) CHEMICAL ETCHING AND MILLING OF ALUMINUM.

Waste code: D001
Waste name: IGNITABLE HAZARDOUS WASTES ARE THOSE WASTES WHICH HAVE A FLASHPOINT OF LESS THAN 140 DEGREES FAHRENHEIT AS DETERMINED BY A PENSKY-MARTENS CLOSED CUP FLASH POINT TESTER. ANOTHER METHOD OF DETERMINING THE FLASH POINT OF A WASTE IS TO REVIEW THE MATERIAL SAFETY DATA SHEET, WHICH CAN BE OBTAINED FROM THE MANUFACTURER OR DISTRIBUTOR OF THE MATERIAL. LACQUER THINNER IS AN EXAMPLE OF A COMMONLY USED SOLVENT WHICH WOULD BE CONSIDERED AS IGNITABLE HAZARDOUS WASTE.

Waste code: D002
Waste name: A WASTE WHICH HAS A PH OF LESS THAN 2 OR GREATER THAN 12.5 IS CONSIDERED TO BE A CORROSIVE HAZARDOUS WASTE. SODIUM HYDROXIDE, A CAUSTIC SOLUTION WITH A HIGH PH, IS OFTEN USED BY INDUSTRIES TO CLEAN OR DEGREASE PARTS. HYDROCHLORIC ACID, A SOLUTION WITH A LOW PH, IS USED BY MANY INDUSTRIES TO CLEAN METAL PARTS PRIOR TO PAINTING. WHEN THESE CAUSTIC OR ACID SOLUTIONS BECOME CONTAMINATED AND MUST BE DISPOSED, THE WASTE WOULD BE A CORROSIVE HAZARDOUS WASTE.

Waste code: D007
Waste name: CHROMIUM

AMERICAN ETCHING AND MFG. (Continued) **1000360637**

Waste code: F006
Waste name: WASTEWATER TREATMENT SLUDGES FROM ELECTROPLATING OPERATIONS EXCEPT FROM THE FOLLOWING PROCESSES: (1) SULFURIC ACID ANODIZING OF ALUMINUM; (2) TIN PLATING ON CARBON STEEL; (3) ZINC PLATING (SEGREGATED BASIS) ON CARBON STEEL; (4) ALUMINUM OR ZINC-ALUMINUM PLATING ON CARBON STEEL; (5) CLEANING/STRIPPING ASSOCIATED WITH TIN, ZINC AND ALUMINUM PLATING ON CARBON STEEL; AND (6) CHEMICAL ETCHING AND MILLING OF ALUMINUM.

Waste code: D001
Waste name: IGNITABLE HAZARDOUS WASTES ARE THOSE WASTES WHICH HAVE A FLASHPOINT OF LESS THAN 140 DEGREES FAHRENHEIT AS DETERMINED BY A PENSKY-MARTENS CLOSED CUP FLASH POINT TESTER. ANOTHER METHOD OF DETERMINING THE FLASH POINT OF A WASTE IS TO REVIEW THE MATERIAL SAFETY DATA SHEET, WHICH CAN BE OBTAINED FROM THE MANUFACTURER OR DISTRIBUTOR OF THE MATERIAL. LACQUER THINNER IS AN EXAMPLE OF A COMMONLY USED SOLVENT WHICH WOULD BE CONSIDERED AS IGNITABLE HAZARDOUS WASTE.

Waste code: D002
Waste name: A WASTE WHICH HAS A PH OF LESS THAN 2 OR GREATER THAN 12.5 IS CONSIDERED TO BE A CORROSIVE HAZARDOUS WASTE. SODIUM HYDROXIDE, A CAUSTIC SOLUTION WITH A HIGH PH, IS OFTEN USED BY INDUSTRIES TO CLEAN OR DEGREASE PARTS. HYDROCHLORIC ACID, A SOLUTION WITH A LOW PH, IS USED BY MANY INDUSTRIES TO CLEAN METAL PARTS PRIOR TO PAINTING. WHEN THESE CAUSTIC OR ACID SOLUTIONS BECOME CONTAMINATED AND MUST BE DISPOSED, THE WASTE WOULD BE A CORROSIVE HAZARDOUS WASTE.

Waste code: D007
Waste name: CHROMIUM

Waste code: D011
Waste name: SILVER

Waste code: D039
Waste name: TETRACHLOROETHYLENE

Waste code: F006
Waste name: WASTEWATER TREATMENT SLUDGES FROM ELECTROPLATING OPERATIONS EXCEPT FROM THE FOLLOWING PROCESSES: (1) SULFURIC ACID ANODIZING OF ALUMINUM; (2) TIN PLATING ON CARBON STEEL; (3) ZINC PLATING (SEGREGATED BASIS) ON CARBON STEEL; (4) ALUMINUM OR ZINC-ALUMINUM PLATING ON CARBON STEEL; (5) CLEANING/STRIPPING ASSOCIATED WITH TIN, ZINC AND ALUMINUM PLATING ON CARBON STEEL; AND (6) CHEMICAL ETCHING AND MILLING OF ALUMINUM.

Waste code: D001
Waste name: IGNITABLE HAZARDOUS WASTES ARE THOSE WASTES WHICH HAVE A FLASHPOINT OF LESS THAN 140 DEGREES FAHRENHEIT AS DETERMINED BY A PENSKY-MARTENS CLOSED CUP FLASH POINT TESTER. ANOTHER METHOD OF DETERMINING THE FLASH POINT OF A WASTE IS TO REVIEW THE MATERIAL SAFETY DATA SHEET, WHICH CAN BE OBTAINED FROM THE MANUFACTURER OR DISTRIBUTOR OF THE MATERIAL. LACQUER THINNER IS AN EXAMPLE OF A COMMONLY USED SOLVENT WHICH WOULD BE CONSIDERED AS IGNITABLE HAZARDOUS WASTE.

Waste code: D002
Waste name: A WASTE WHICH HAS A PH OF LESS THAN 2 OR GREATER THAN 12.5 IS CONSIDERED TO BE A CORROSIVE HAZARDOUS WASTE. SODIUM HYDROXIDE, A

AMERICAN ETCHING AND MFG. (Continued) **1000360637**

CAUSTIC SOLUTION WITH A HIGH PH, IS OFTEN USED BY INDUSTRIES TO CLEAN OR DEGREASE PARTS. HYDROCHLORIC ACID, A SOLUTION WITH A LOW PH, IS USED BY MANY INDUSTRIES TO CLEAN METAL PARTS PRIOR TO PAINTING. WHEN THESE CAUSTIC OR ACID SOLUTIONS BECOME CONTAMINATED AND MUST BE DISPOSED, THE WASTE WOULD BE A CORROSIVE HAZARDOUS WASTE.

Waste code: F006
Waste name: WASTEWATER TREATMENT SLUDGES FROM ELECTROPLATING OPERATIONS EXCEPT FROM THE FOLLOWING PROCESSES: (1) SULFURIC ACID ANODIZING OF ALUMINUM; (2) TIN PLATING ON CARBON STEEL; (3) ZINC PLATING (SEGREGATED BASIS) ON CARBON STEEL; (4) ALUMINUM OR ZINC-ALUMINUM PLATING ON CARBON STEEL; (5) CLEANING/STRIPPING ASSOCIATED WITH TIN, ZINC AND ALUMINUM PLATING ON CARBON STEEL; AND (6) CHEMICAL ETCHING AND MILLING OF ALUMINUM.

Waste code: 171
Waste name: 171

Waste code: 213
Waste name: 213

Waste code: D001
Waste name: IGNITABLE HAZARDOUS WASTES ARE THOSE WASTES WHICH HAVE A FLASHPOINT OF LESS THAN 140 DEGREES FAHRENHEIT AS DETERMINED BY A PENSKY-MARTENS CLOSED CUP FLASH POINT TESTER. ANOTHER METHOD OF DETERMINING THE FLASH POINT OF A WASTE IS TO REVIEW THE MATERIAL SAFETY DATA SHEET, WHICH CAN BE OBTAINED FROM THE MANUFACTURER OR DISTRIBUTOR OF THE MATERIAL. LACQUER THINNER IS AN EXAMPLE OF A COMMONLY USED SOLVENT WHICH WOULD BE CONSIDERED AS IGNITABLE HAZARDOUS WASTE.

Waste code: D002
Waste name: A WASTE WHICH HAS A PH OF LESS THAN 2 OR GREATER THAN 12.5 IS CONSIDERED TO BE A CORROSIVE HAZARDOUS WASTE. SODIUM HYDROXIDE, A CAUSTIC SOLUTION WITH A HIGH PH, IS OFTEN USED BY INDUSTRIES TO CLEAN OR DEGREASE PARTS. HYDROCHLORIC ACID, A SOLUTION WITH A LOW PH, IS USED BY MANY INDUSTRIES TO CLEAN METAL PARTS PRIOR TO PAINTING. WHEN THESE CAUSTIC OR ACID SOLUTIONS BECOME CONTAMINATED AND MUST BE DISPOSED, THE WASTE WOULD BE A CORROSIVE HAZARDOUS WASTE.

Waste code: F006
Waste name: WASTEWATER TREATMENT SLUDGES FROM ELECTROPLATING OPERATIONS EXCEPT FROM THE FOLLOWING PROCESSES: (1) SULFURIC ACID ANODIZING OF ALUMINUM; (2) TIN PLATING ON CARBON STEEL; (3) ZINC PLATING (SEGREGATED BASIS) ON CARBON STEEL; (4) ALUMINUM OR ZINC-ALUMINUM PLATING ON CARBON STEEL; (5) CLEANING/STRIPPING ASSOCIATED WITH TIN, ZINC AND ALUMINUM PLATING ON CARBON STEEL; AND (6) CHEMICAL ETCHING AND MILLING OF ALUMINUM.

Biennial Reports:

Last Biennial Reporting Year: 2013

Annual Waste Handled:
Waste code: D002
Waste name: A WASTE WHICH HAS A PH OF LESS THAN 2 OR GREATER THAN 12.5 IS CONSIDERED TO BE A CORROSIVE HAZARDOUS WASTE. SODIUM HYDROXIDE, A CAUSTIC SOLUTION WITH A HIGH PH, IS OFTEN USED BY INDUSTRIES TO CLEAN OR DEGREASE PARTS. HYDROCHLORIC ACID, A SOLUTION WITH A LOW PH, IS

AMERICAN ETCHING AND MFG. (Continued) **1000360637**

USED BY MANY INDUSTRIES TO CLEAN METAL PARTS PRIOR TO PAINTING. WHEN THESE CAUSTIC OR ACID SOLUTIONS BECOME CONTAMINATED AND MUST BE DISPOSED, THE WASTE WOULD BE A CORROSIVE HAZARDOUS WASTE.

Amount (Lbs): 207449

Waste code: D007
Waste name: CHROMIUM
Amount (Lbs): 207449

Waste code: D008
Waste name: LEAD
Amount (Lbs): 207449

Waste code: F006
Waste name: WASTEWATER TREATMENT SLUDGES FROM ELECTROPLATING OPERATIONS EXCEPT FROM THE FOLLOWING PROCESSES: (1) SULFURIC ACID ANODIZING OF ALUMINUM; (2) TIN PLATING ON CARBON STEEL; (3) ZINC PLATING (SEGREGATED BASIS) ON CARBON STEEL; (4) ALUMINUM OR ZINC-ALUMINUM PLATING ON CARBON STEEL; (5) CLEANING/STRIPPING ASSOCIATED WITH TIN, ZINC AND ALUMINUM PLATING ON CARBON STEEL; AND (6) CHEMICAL ETCHING AND MILLING OF ALUMINUM.
Amount (Lbs): 57700

Corrective Action Summary:

Event date: 03/26/1991
Event: CA029WQ

Event date: 03/26/1991
Event: CA049PA

Event date: 03/26/1991
Event: CA Prioritization, Facility or area was assigned a medium corrective action priority.

Event date: 03/26/1991
Event: CA074ME

Event date: Not reported
Event: CA03193

Facility Has Received Notices of Violations:

Regulation violated: Not reported
Area of violation: Generators - Pre-transport
Date violation determined: 09/28/2006
Date achieved compliance: Not reported
Violation lead agency: EPA
Enforcement action: Not reported
Enforcement action date: Not reported
Enf. disposition status: Not reported
Enf. disp. status date: Not reported
Enforcement lead agency: Not reported
Proposed penalty amount: Not reported
Final penalty amount: Not reported
Paid penalty amount: Not reported

AMERICAN ETCHING AND MFG. (Continued) **1000360637**

Regulation violated:	F - 264.140-150.H
Area of violation:	TSD - Financial Requirements
Date violation determined:	07/28/1989
Date achieved compliance:	11/29/1995
Violation lead agency:	State
Enforcement action:	Not reported
Enforcement action date:	Not reported
Enf. disposition status:	Not reported
Enf. disp. status date:	Not reported
Enforcement lead agency:	Not reported
Proposed penalty amount:	Not reported
Final penalty amount:	Not reported
Paid penalty amount:	Not reported

Regulation violated:	FR - 270
Area of violation:	TSD - General
Date violation determined:	07/25/1989
Date achieved compliance:	08/02/1989
Violation lead agency:	State
Enforcement action:	WRITTEN INFORMAL
Enforcement action date:	08/31/1989
Enf. disposition status:	Not reported
Enf. disp. status date:	Not reported
Enforcement lead agency:	State
Proposed penalty amount:	Not reported
Final penalty amount:	Not reported
Paid penalty amount:	Not reported

Regulation violated:	F - 264.140-150.H
Area of violation:	TSD - Financial Requirements
Date violation determined:	07/29/1987
Date achieved compliance:	11/29/1995
Violation lead agency:	State
Enforcement action:	WRITTEN INFORMAL
Enforcement action date:	02/14/1986
Enf. disposition status:	Not reported
Enf. disp. status date:	Not reported
Enforcement lead agency:	State
Proposed penalty amount:	Not reported
Final penalty amount:	Not reported
Paid penalty amount:	Not reported

Evaluation Action Summary:

Evaluation date:	09/08/2010
Evaluation:	COMPLIANCE EVALUATION INSPECTION ON-SITE
Area of violation:	Not reported
Date achieved compliance:	Not reported
Evaluation lead agency:	State

Evaluation date:	04/17/2007
Evaluation:	COMPLIANCE EVALUATION INSPECTION ON-SITE
Area of violation:	Not reported
Date achieved compliance:	Not reported
Evaluation lead agency:	State

Evaluation date:	09/28/2006
Evaluation:	COMPLIANCE EVALUATION INSPECTION ON-SITE

AMERICAN ETCHING AND MFG. (Continued) **1000360637**

Area of violation:	Generators - Pre-transport
Date achieved compliance:	Not reported
Evaluation lead agency:	EPA

Evaluation date:	07/28/1989
Evaluation:	FINANCIAL RECORD REVIEW
Area of violation:	TSD - Financial Requirements
Date achieved compliance:	11/29/1995
Evaluation lead agency:	State

Evaluation date:	07/25/1989
Evaluation:	COMPLIANCE EVALUATION INSPECTION ON-SITE
Area of violation:	TSD - General
Date achieved compliance:	08/02/1989
Evaluation lead agency:	State

Evaluation date:	07/29/1987
Evaluation:	FINANCIAL RECORD REVIEW
Area of violation:	TSD - Financial Requirements
Date achieved compliance:	11/29/1995
Evaluation lead agency:	State

NPDES:

Npdes Number:	CAS000001
Facility Status:	Active
Agency Id:	0
Region:	4
Regulatory Measure Id:	188579
Order No:	97-03-DWQ
Regulatory Measure Type:	Enrollee
Place Id:	Not reported
WDID:	4 19I000276
Program Type:	Industrial
Adoption Date Of Regulatory Measure:	Not reported
Effective Date Of Regulatory Measure:	03/06/1992
Expiration Date Of Regulatory Measure:	Not reported
Termination Date Of Regulatory Measure:	Not reported
Discharge Name:	American Etching & Manufacturing
Discharge Address:	13730 Desmond St
Discharge City:	Pacoima
Discharge State:	California
Discharge Zip:	91331

HIST CORTESE:

Region:	CORTESE
Facility County Code:	19
Reg By:	LTNKA
Reg Id:	111.0092

LUST:

Region:	STATE
Global Id:	T0603700183
Latitude:	34.273635
Longitude:	-118.431633
Case Type:	LUST Cleanup Site
Status:	Completed - Case Closed
Status Date:	11/18/1996

AMERICAN ETCHING AND MFG. (Continued) **1000360637**

Lead Agency:	LOS ANGELES RWQCB (REGION 4)
Case Worker:	WIP
Local Agency:	LOS ANGELES, CITY OF
RB Case Number:	111.0092
LOC Case Number:	Not reported
File Location:	Not reported
Potential Media Affect:	Soil
Potential Contaminants of Concern:	* Solvents
Site History:	Not reported

Click here to access the California GeoTracker records for this facility:

Contact:

Global Id:	T0603700183
Contact Type:	Regional Board Caseworker
Contact Name:	WELL INVESTIGATION PROGRAM
Organization Name:	LOS ANGELES RWQCB (REGION 4)
Address:	320 W. 4TH ST., SUITE 200
City:	LOS ANGELES
Email:	Not reported
Phone Number:	Not reported

Global Id:	T0603700183
Contact Type:	Local Agency Caseworker
Contact Name:	TBD
Organization Name:	LOS ANGELES, CITY OF
Address:	200 N. MAIN ST. RM. 970
City:	LOS ANGELES
Email:	Not reported
Phone Number:	2134826528

Status History:

Global Id:	T0603700183
Status:	Completed - Case Closed
Status Date:	11/18/1996

Global Id:	T0603700183
Status:	Open - Case Begin Date
Status Date:	01/31/1984

Global Id:	T0603700183
Status:	Open - Site Assessment
Status Date:	02/17/1989

Regulatory Activities:

Global Id:	T0603700183
Action Type:	Other
Date:	09/24/1984
Action:	Leak Stopped

Global Id:	T0603700183
Action Type:	Other
Date:	09/24/1984
Action:	Leak Discovery

Global Id:	T0603700183
Action Type:	Other

AMERICAN ETCHING AND MFG. (Continued) **1000360637**

Date: 01/31/1984
Action: Leak Reported

LUST REG 4:

Region:	4
Regional Board:	04
County:	Los Angeles
Facility Id:	111.0092
Status:	Case Closed
Substance:	Solvents
Substance Quantity:	Not reported
Local Case No:	Not reported
Case Type:	Soil
Abatement Method Used at the Site:	Not reported
Global ID:	T0603700183
W Global ID:	Not reported
Staff:	wip
Local Agency:	19050
Cross Street:	SAN FERNANDO RD
Enforcement Type:	Not reported
Date Leak Discovered:	9/24/1984
Date Leak First Reported:	1/31/1984
Date Leak Record Entered:	12/31/1986
Date Confirmation Began:	Not reported
Date Leak Stopped:	9/24/1984
Date Case Last Changed on Database:	3/13/1996
Date the Case was Closed:	11/18/1996
How Leak Discovered:	Not reported
How Leak Stopped:	Not reported
Cause of Leak:	UNK
Leak Source:	UNK
Operator:	BEEM, ROGER
Water System:	Not reported
Well Name:	Not reported
Approx. Dist To Production Well (ft):	9579.8384457989812179593527
Source of Cleanup Funding:	UNK
Preliminary Site Assessment Workplan Submitted:	Not reported
Preliminary Site Assessment Began:	Not reported
Pollution Characterization Began:	2/17/1989
Remediation Plan Submitted:	Not reported
Remedial Action Underway:	Not reported
Post Remedial Action Monitoring Began:	Not reported
Enforcement Action Date:	Not reported
Historical Max MTBE Date:	Not reported
Hist Max MTBE Conc in Groundwater:	Not reported
Hist Max MTBE Conc in Soil:	Not reported
Significant Interim Remedial Action Taken:	Yes
GW Qualifier:	Not reported
Soil Qualifier:	Not reported
Organization:	Not reported
Owner Contact:	Not reported
Responsible Party:	AMERICAN ETCHING & MFG.
RP Address:	13730 DESMOND ST, PACAIMO, CA 91331
Program:	LUST
Lat/Long:	34.273752 / -1
Local Agency Staff:	PEJ

AMERICAN ETCHING AND MFG. (Continued) **1000360637**

Beneficial Use:	Not reported
Priority:	Not reported
Cleanup Fund Id:	Not reported
Suspended:	Not reported
Assigned Name:	Not reported
Summary:	CASE INITIATED BY RWQCB IN 1984. SITE ASSESSMENT WORK INCONCLUSIVE BECAUSE THE DETECTION LIMIT FOR SOIL SAMPLE ANALYSIS WAS TOO HIGH.

CA FID UST:

Facility ID:	19000055
Regulated By:	UTNKA
Regulated ID:	00034330
Cortese Code:	Not reported
SIC Code:	Not reported
Facility Phone:	8188961187
Mail To:	Not reported
Mailing Address:	13730 DESMOND ST
Mailing Address 2:	Not reported
Mailing City,St,Zip:	PACOIMA 913310000
Contact:	Not reported
Contact Phone:	Not reported
DUNs Number:	Not reported
NPDES Number:	Not reported
EPA ID:	Not reported
Comments:	Not reported
Status:	Active

SLIC:

Region:	STATE
Facility Status:	**Open - Inactive**
Status Date:	10/30/2014
Global Id:	SL603799024
Lead Agency:	LOS ANGELES RWQCB (REGION 4)
Lead Agency Case Number:	Not reported
Latitude:	34.273635
Longitude:	-118.431633
Case Type:	Cleanup Program Site
Case Worker:	GJH
Local Agency:	Not reported
RB Case Number:	111.0092
File Location:	Not reported
Potential Media Affected:	Aquifer used for drinking water supply
Potential Contaminants of Concern:	Not reported
Site History:	Not reported

Click here to access the California GeoTracker records for this facility:

HIST UST:

Region:	STATE
Facility ID:	00000034330
Facility Type:	Other
Other Type:	PHOTO CHEM. ETCHING
Contact Name:	ROGER C. BEEM
Telephone:	8188961187
Owner Name:	AMERICAN ETCHING & MANUFACTURI
Owner Address:	13730 DESMOND STREET

AMERICAN ETCHING AND MFG. (Continued) **1000360637**

Owner City,St,Zip: PACOIMA, CA 91331
Total Tanks: 0007

Tank Num: 001
Container Num: 01
Year Installed: 1980
Tank Capacity: 00006000
Tank Used for: WASTE
Type of Fuel: Not reported
Container Construction Thickness: 3/8
Leak Detection: Stock Inventor

Tank Num: 002
Container Num: 02
Year Installed: 1980
Tank Capacity: 00003000
Tank Used for: WASTE
Type of Fuel: Not reported
Container Construction Thickness: 3/16
Leak Detection: Stock Inventor

Tank Num: 003
Container Num: 03
Year Installed: Not reported
Tank Capacity: 00001200
Tank Used for: WASTE
Type of Fuel: Not reported
Container Construction Thickness: 6
Leak Detection: Visual

Tank Num: 004
Container Num: 04
Year Installed: Not reported
Tank Capacity: 00000500
Tank Used for: WASTE
Type of Fuel: Not reported
Container Construction Thickness: 6
Leak Detection: Visual

Tank Num: 005
Container Num: 05
Year Installed: 1984
Tank Capacity: 00000700
Tank Used for: WASTE
Type of Fuel: Not reported
Container Construction Thickness: 6
Leak Detection: Visual

Tank Num: 006
Container Num: 06
Year Installed: 1983
Tank Capacity: 00000450
Tank Used for: WASTE
Type of Fuel: Not reported
Container Construction Thickness: 6
Leak Detection: Visual

AMERICAN ETCHING AND MFG. (Continued) **1000360637**

Tank Num: 007
Container Num: 07
Year Installed: 1984
Tank Capacity: 00000040
Tank Used for: WASTE
Type of Fuel: Not reported
Container Construction Thickness: 1/2
Leak Detection: Visual

SWEEPS UST:
Status: Active
Comp Number: 1979
Number: 9
Board Of Equalization: 44-012113
Referral Date: 01-22-93
Action Date: 04-07-94
Created Date: 02-29-88
Owner Tank Id: Not reported
SWRCB Tank Id: 19-050-001979-000001
Tank Status: A
Capacity: 6000
Active Date: 04-20-88
Tank Use: CHEMICAL
STG: P
Content: UNKNOWN
Number Of Tanks: 7

Status: Active
Comp Number: 1979
Number: 9
Board Of Equalization: 44-012113
Referral Date: 01-22-93
Action Date: 04-07-94
Created Date: 02-29-88
Owner Tank Id: Not reported
SWRCB Tank Id: 19-050-001979-000002
Tank Status: A
Capacity: 3000
Active Date: 04-20-88
Tank Use: CHEMICAL
STG: P
Content: UNKNOWN
Number Of Tanks: Not reported

Status: Active
Comp Number: 1979
Number: 9
Board Of Equalization: 44-012113
Referral Date: 01-22-93
Action Date: 04-07-94
Created Date: 02-29-88
Owner Tank Id: Not reported
SWRCB Tank Id: 19-050-001979-000003
Tank Status: A
Capacity: 1200
Active Date: 04-20-88
Tank Use: CHEMICAL

AMERICAN ETCHING AND MFG. (Continued) **1000360637**

STG:	P
Content:	UNKNOWN
Number Of Tanks:	Not reported

Status:	Active
Comp Number:	1979
Number:	9
Board Of Equalization:	44-012113
Referral Date:	01-22-93
Action Date:	04-07-94
Created Date:	02-29-88
Owner Tank Id:	Not reported
SWRCB Tank Id:	19-050-001979-000004
Tank Status:	A
Capacity:	500
Active Date:	04-20-88
Tank Use:	CHEMICAL
STG:	P
Content:	UNKNOWN
Number Of Tanks:	Not reported

Status:	Active
Comp Number:	1979
Number:	9
Board Of Equalization:	44-012113
Referral Date:	01-22-93
Action Date:	04-07-94
Created Date:	02-29-88
Owner Tank Id:	Not reported
SWRCB Tank Id:	19-050-001979-000005
Tank Status:	A
Capacity:	700
Active Date:	04-20-88
Tank Use:	CHEMICAL
STG:	P
Content:	UNKNOWN
Number Of Tanks:	Not reported

Status:	Active
Comp Number:	1979
Number:	9
Board Of Equalization:	44-012113
Referral Date:	01-22-93
Action Date:	04-07-94
Created Date:	02-29-88
Owner Tank Id:	Not reported
SWRCB Tank Id:	19-050-001979-000006
Tank Status:	A
Capacity:	450
Active Date:	04-20-88
Tank Use:	CHEMICAL
STG:	P
Content:	UNKNOWN
Number Of Tanks:	Not reported

Status:	Active
Comp Number:	1979

AMERICAN ETCHING AND MFG. (Continued) **1000360637**

Number:	9
Board Of Equalization:	44-012113
Referral Date:	01-22-93
Action Date:	04-07-94
Created Date:	02-29-88
Owner Tank Id:	Not reported
SWRCB Tank Id:	19-050-001979-000007
Tank Status:	A
Capacity:	40
Active Date:	04-20-88
Tank Use:	CHEMICAL
STG:	P
Content:	UNKNOWN
Number Of Tanks:	Not reported

WIP:

Region:	4
File Number:	111.0092
File Status:	**Backlog**
Staff:	UNIDENTIFIED
Facility Suite:	Not reported

ENF:

Region:	4
Facility Id:	205493
Agency Name:	American Etching
Place Type:	Facility
Place Subtype:	Not reported
Facility Type:	Not reported
Agency Type:	Privately-Owned Business
# Of Agencies:	1
Place Latitude:	34.273842
Place Longitude:	-118.431773
SIC Code 1:	Not reported
SIC Desc 1:	Not reported
SIC Code 2:	Not reported
SIC Desc 2:	Not reported
SIC Code 3:	Not reported
SIC Desc 3:	Not reported
NAICS Code 1:	Not reported
NAICS Desc 1:	Not reported
NAICS Code 2:	Not reported
NAICS Desc 2:	Not reported
NAICS Code 3:	Not reported
NAICS Desc 3:	Not reported
# Of Places:	1
Source Of Facility:	Reg Meas
Design Flow:	Not reported
Threat To Water Quality:	Not reported
Complexity:	Not reported
Pretreatment:	Not reported
Facility Waste Type:	Not reported
Facility Waste Type 2:	Not reported
Facility Waste Type 3:	Not reported
Facility Waste Type 4:	Not reported
Program:	WIP

AMERICAN ETCHING AND MFG. (Continued) **1000360637**

Program Category1:	MONITORING
Program Category2:	MONITORING
# Of Programs:	1
WDID:	4WIP1110092
Reg Measure Id:	166466
Reg Measure Type:	Unregulated
Region:	4
Order #:	Not reported
Npdes# CA#:	Not reported
Major-Minor:	Not reported
Npdes Type:	Not reported
Reclamation:	Not reported
Dredge Fill Fee:	Not reported
301H:	Not reported
Application Fee Amt Received:	Not reported
Status:	Historical
Status Date:	06/17/2005
Effective Date:	Not reported
Expiration/Review Date:	Not reported
Termination Date:	Not reported
WDR Review - Amend:	Not reported
WDR Review - Revise/Renew:	Not reported
WDR Review - Rescind:	Not reported
WDR Review - No Action Required:	Not reported
WDR Review - Pending:	Not reported
WDR Review - Planned:	Not reported
Status Enrollee:	N
Individual/General:	Not reported
Fee Code:	Not reported
Direction/Voice:	Passive
Enforcement Id(EID):	226407
Region:	4
Order / Resolution Number:	13267 Letter
Enforcement Action Type:	13267 Letter
Effective Date:	11/09/2000
Adoption/Issuance Date:	Not reported
Achieve Date:	Not reported
Termination Date:	11/09/2000
ACL Issuance Date:	Not reported
EPL Issuance Date:	Not reported
Status:	Historical
Title:	Enforcement - 4WIP1110092
Description:	Not reported
Program:	WIP
Latest Milestone Completion Date:	Not reported
# Of Programs1:	1
Total Assessment Amount:	$0.00
Initial Assessed Amount:	$0.00
Liability $ Amount:	$0.00
Project $ Amount:	$0.00
Liability $ Paid:	$0.00
Project $ Completed:	$0.00
Total $ Paid/Completed Amount:	$0.00

HAZNET:

envid:	1000360637
Year:	2013

AMERICAN ETCHING AND MFG. (Continued) **1000360637**

GEPAID: CAD064573405
Contact: BRIAN WASSELL
Telephone: 8188961187
Mailing Name: Not reported
Mailing Address: 13730 DESMOND ST
Mailing City,St,Zip: PACOIMA, CA 913312706
Gen County: Los Angeles
TSD EPA ID: NVT330010000
TSD County: 99
Waste Category: Not reported
Disposal Method: Other Recovery Of Reclamation For Reuse Including Acid Regeneration, Organics Recovery Ect
Tons: 95.1177
Facility County: Not reported

envid: 1000360637
Year: 2013
GEPAID: CAD064573405
Contact: BRIAN WASSELL
Telephone: 8188961187
Mailing Name: Not reported
Mailing Address: 13730 DESMOND ST
Mailing City,St,Zip: PACOIMA, CA 913312706
Gen County: Los Angeles
TSD EPA ID: NVT330010000
TSD County: 99
Waste Category: Not reported
Disposal Method: Landfill Or Surface Impoundment That Will Be Closed As Landfill(To Include On-Site Treatment And/Or Stabilization)
Tons: 30.7556
Facility County: Not reported

envid: 1000360637
Year: 2013
GEPAID: CAD064573405
Contact: BRIAN WASSELL
Telephone: 8188961187
Mailing Name: Not reported
Mailing Address: 13730 DESMOND ST
Mailing City,St,Zip: PACOIMA, CA 913312706
Gen County: Los Angeles
TSD EPA ID: NVT330010000
TSD County: 99
Waste Category: Not reported
Disposal Method: Landfill Or Surface Impoundment That Will Be Closed As Landfill(To Include On-Site Treatment And/Or Stabilization)
Tons: 0.4
Facility County: Not reported

envid: 1000360637
Year: 2013
GEPAID: CAD064573405
Contact: BRIAN WASSELL
Telephone: 8188961187
Mailing Name: Not reported
Mailing Address: 13730 DESMOND ST
Mailing City,St,Zip: PACOIMA, CA 913312706

AMERICAN ETCHING AND MFG. (Continued) **1000360637**

Gen County:	Los Angeles
TSD EPA ID:	CAD008364432
TSD County:	Los Angeles
Waste Category:	Not reported
Disposal Method:	Storage, Bulking, And/Or Transfer Off Site--No Treatment/Reovery (H010-H129) Or (H131-H135)
Tons:	0.7
Facility County:	Not reported

envid:	1000360637
Year:	2012
GEPAID:	CAD064573405
Contact:	BRIAN WASSELL
Telephone:	8188961187
Mailing Name:	Not reported
Mailing Address:	13730 DESMOND ST
Mailing City,St,Zip:	PACOIMA, CA 913312706
Gen County:	Los Angeles
TSD EPA ID:	NVT330010000
TSD County:	99
Waste Category:	Not reported
Disposal Method:	Landfill Or Surface Impoundment That Will Be Closed As Landfill(To Include On-Site Treatment And/Or Stabilization)
Tons:	55.54023
Facility County:	Los Angeles

Click this hyperlink while viewing on your computer to access
157 additional CA_HAZNET: record(s) in the EDR Site Report.

ENVIROSTOR:

Facility ID:	71002523
Status:	Refer: Other Agency
Status Date:	Not reported
Site Code:	Not reported
Site Type:	Tiered Permit
Site Type Detailed:	Tiered Permit
Acres:	Not reported
NPL:	NO
Regulatory Agencies:	NONE SPECIFIED
Lead Agency:	NONE SPECIFIED
Program Manager:	Not reported
Supervisor:	Not reported
Division Branch:	Cleanup Chatsworth
Assembly:	39
Senate:	20
Special Program:	Not reported
Restricted Use:	NO
Site Mgmt Req:	NONE SPECIFIED
Funding:	Not reported
Latitude:	34.27363
Longitude:	-118.4316
APN:	NONE SPECIFIED
Past Use:	NONE SPECIFIED
Potential COC:	NONE SPECIFIED
Confirmed COC:	NONE SPECIFIED
Potential Description:	NONE SPECIFIED
Alias Name:	CAD064573405

AMERICAN ETCHING AND MFG. (Continued) **1000360637**

Alias Type: EPA Identification Number
Alias Name: 71002523
Alias Type: Envirostor ID Number

Completed Info:
Completed Area Name: Not reported
Completed Sub Area Name: Not reported
Completed Document Type: Not reported
Completed Date: Not reported
Comments: Not reported

Future Area Name: Not reported
Future Sub Area Name: Not reported
Future Document Type: Not reported
Future Due Date: Not reported
Schedule Area Name: Not reported
Schedule Sub Area Name: Not reported
Schedule Document Type: Not reported
Schedule Due Date: Not reported
Schedule Revised Date: Not reported

Facility ID: 60000608
Status: Inactive - Action Required
Status Date: 06/30/2007
Site Code: Not reported
Site Type: Evaluation
Site Type Detailed: Evaluation
Acres: 0.17
NPL: NO
Regulatory Agencies: SMBRP, US EPA
Lead Agency: SMBRP
Program Manager: Not reported
Supervisor: Rita Kamat
Division Branch: Cleanup Chatsworth
Assembly: 39
Senate: 20
Special Program: EPA - PASI
Restricted Use: NO
Site Mgmt Req: NONE SPECIFIED
Funding: EPA Grant
Latitude: 34.27363
Longitude: -118.4316
APN: 2616030035
Past Use: METAL FINISHING, METAL PLATING - CHROME, METAL PLATING - OTHER
Potential COC: Tetrachloroethylene (PCE Trichloroethylene (TCE
Confirmed COC: 30022-NO 30027-NO
Potential Description: OTH, SOIL, SV
Alias Name: 2616030035
Alias Type: APN
Alias Name: 60000608
Alias Type: Envirostor ID Number

Completed Info:
Completed Area Name: PROJECT WIDE
Completed Sub Area Name: Not reported
Completed Document Type: Site Screening
Completed Date: 06/21/2007
Comments: EPA approved the assessment for the site.

AMERICAN ETCHING AND MFG. (Continued) **1000360637**

Future Area Name: Not reported
Future Sub Area Name: Not reported
Future Document Type: Not reported
Future Due Date: Not reported
Schedule Area Name: Not reported
Schedule Sub Area Name: Not reported
Schedule Document Type: Not reported
Schedule Due Date: Not reported
Schedule Revised Date: Not reported

Facility ID: 80001449
Status: * Inactive
Status Date: 01/01/2008
Site Code: Not reported
Site Type: Corrective Action
Site Type Detailed: Corrective Action
Acres: 0
NPL: NO
Regulatory Agencies: NONE SPECIFIED
Lead Agency: NONE SPECIFIED
Program Manager: Not reported
Supervisor: * Unknown
Division Branch: Cleanup Chatsworth
Assembly: 39
Senate: 20
Special Program: Not reported
Restricted Use: NO
Site Mgmt Req: NONE SPECIFIED
Funding: Not reported
Latitude: 34.27361
Longitude: -118.4316
APN: 2616030035
Past Use: NONE SPECIFIED
Potential COC: NONE SPECIFIED
Confirmed COC: NONE SPECIFIED
Potential Description: NONE SPECIFIED
Alias Name: 2616030035
Alias Type: APN
Alias Name: CAD064573405
Alias Type: EPA Identification Number
Alias Name: 80001449
Alias Type: Envirostor ID Number

Completed Info:
Completed Area Name: PROJECT WIDE
Completed Sub Area Name: Not reported
Completed Document Type: Preliminary Assessment Report
Completed Date: 03/26/1991
Comments: Not reported

Future Area Name: Not reported
Future Sub Area Name: Not reported
Future Document Type: Not reported
Future Due Date: Not reported
Schedule Area Name: Not reported
Schedule Sub Area Name: Not reported
Schedule Document Type: Not reported
Schedule Due Date: Not reported

AMERICAN ETCHING AND MFG. (Continued) **1000360637**

Schedule Revised Date: Not reported

HWP:

EPA Id:	CAD064573405
Cleanup Status:	UNKNOWN
Latitude:	34.27360
Longitude:	-118.4313
Facility Type:	Historical - Non-Operating
Facility Size:	Not reported
Team:	Not reported
Supervisor:	Not reported
Site Code:	Not reported
Assembly District:	39
Senate District:	18
Public Information Officer:	Not reported

CA WDS:

Facility ID:	4 19I000276
Facility Type:	Industrial - Facility that treats and/or disposes of liquid or semisolid wastes from any servicing, producing, manufacturing or processing operation of whatever nature, including mining, gravel washing, geothermal operations, air conditioning, ship building and repairing, oil production, storage and disposal operations, water pumping.
Facility Status:	Active - Any facility with a continuous or seasonal discharge that is under Waste Discharge Requirements.
NPDES Number:	CAS000001 The 1st 2 characters designate the state. The remaining 7 are assigned by the Regional Board
Subregion:	4
Facility Telephone:	8188961187
Facility Contact:	BRIAN WASSELL
Agency Name:	AMERICAN ETCHING & MFG
Agency Address:	13730 Desmond St
Agency City,St,Zip:	Pacoima 913312706
Agency Contact:	BRIAN WASSELL
Agency Telephone:	8188961187
Agency Type:	City
SIC Code:	0
SIC Code 2:	Not reported
Primary Waste Type:	Not reported
Primary Waste:	Not reported
Waste Type2:	Not reported
Waste2:	Not reported
Primary Waste Type:	Not reported
Secondary Waste:	Not reported
Secondary Waste Type:	Not reported
Design Flow:	0
Baseline Flow:	0
Reclamation:	Not reported
POTW:	Not reported
Treat To Water:	Minor Threat to Water Quality. A violation of a regional board order should cause a relatively minor impairment of beneficial uses compared to a major or minor threat. Not: All nurds without a TTWQ will be considered a minor threat to water quality unless coded at a higher Level. A Zero (0) may be used to code those NURDS that are found to represent no threat to water quality.

AMERICAN ETCHING AND MFG. (Continued) **1000360637**

Complexity: Category C - Facilities having no waste treatment systems, such as cooling water dischargers or thosewho must comply through best management practices, facilities with passive waste treatment and disposal systems, such as septic systems with subsurface disposal, or dischargers having waste storage systems with land disposal such as dairy waste ponds.

H63 **CP PLATING** **ENVIROSTOR** **S110493757**
NE **13717 DESMOND STREET** **N/A**
1/2-1 **PACOIMA, CA 91331**
0.762 mi.
4021 ft. **Site 2 of 2 in cluster H**

Relative:
Higher

Actual:
1043 ft.

ENVIROSTOR:

Facility ID:	71004122
Status:	Inactive - Needs Evaluation
Status Date:	09/16/2013
Site Code:	Not reported
Site Type:	Tiered Permit
Site Type Detailed:	Tiered Permit
Acres:	0
NPL:	NO
Regulatory Agencies:	NONE SPECIFIED
Lead Agency:	NONE SPECIFIED
Program Manager:	Not reported
Supervisor:	Steve Lavinger
Division Branch:	Cleanup Chatsworth
Assembly:	39
Senate:	20
Special Program:	Not reported
Restricted Use:	NO
Site Mgmt Req:	NONE SPECIFIED
Funding:	Not reported
Latitude:	34.2625
Longitude:	-118.4261
APN:	NONE SPECIFIED
Past Use:	NONE SPECIFIED
Potential COC:	NONE SPECIFIED
Confirmed COC:	NONE SPECIFIED
Potential Description:	NONE SPECIFIED
Alias Name:	71004122
Alias Type:	Envirostor ID Number

Completed Info:

Completed Area Name:	Not reported
Completed Sub Area Name:	Not reported
Completed Document Type:	Not reported
Completed Date:	Not reported
Comments:	Not reported
Future Area Name:	Not reported
Future Sub Area Name:	Not reported
Future Document Type:	Not reported
Future Due Date:	Not reported
Schedule Area Name:	Not reported
Schedule Sub Area Name:	Not reported
Schedule Document Type:	Not reported
Schedule Due Date:	Not reported

CP PLATING (Continued) **S110493757**

Schedule Revised Date: Not reported

64
NE
1/2-1
0.822 mi.
4339 ft.

CHEVRON USA INC.
11113 SAN FERNANDO RD
LOS ANGELES, CA 90000

SWEEPS UST **S100178823**
Notify 65 **N/A**

Relative:
Higher

Actual:
1032 ft.

SWEEPS UST:

Status:	Active
Comp Number:	8287
Number:	1
Board Of Equalization:	Not reported
Referral Date:	09-23-93
Action Date:	09-23-93
Created Date:	09-23-93
Owner Tank Id:	Not reported
SWRCB Tank Id:	Not reported
Tank Status:	Not reported
Capacity:	Not reported
Active Date:	Not reported
Tank Use:	Not reported
STG:	Not reported
Content:	Not reported
Number Of Tanks:	Not reported

Notify 65:

Date Reported:	Not reported
Staff Initials:	Not reported
Board File Number:	Not reported
Facility Type:	Not reported
Discharge Date:	Not reported
Incident Description:	Not reported

I65
NE
1/2-1
0.911 mi.
4809 ft.

FRED E MARSHALL CONSTRUCTION
11071 SUTTER AVE
PACOIMA, CA 91331

Site 1 of 3 in cluster I

CA FID UST **S101585215**
SWEEPS UST **N/A**
WIP
ENVIROSTOR

Relative:
Higher

Actual:
1030 ft.

CA FID UST:

Facility ID:	19021068
Regulated By:	UTNKA
Regulated ID:	Not reported
Cortese Code:	Not reported
SIC Code:	Not reported
Facility Phone:	2130000000
Mail To:	Not reported
Mailing Address:	11071 SUTTER AVE
Mailing Address 2:	Not reported
Mailing City,St,Zip:	PACOIMA 913310000
Contact:	Not reported
Contact Phone:	Not reported
DUNs Number:	Not reported
NPDES Number:	Not reported
EPA ID:	Not reported

FRED E MARSHALL CONSTRUCTION (Continued) **S101585215**

Comments: Not reported
Status: Active

SWEEPS UST:
Status: Active
Comp Number: 6542
Number: 9
Board Of Equalization: Not reported
Referral Date: 07-21-93
Action Date: 07-21-93
Created Date: 02-29-88
Owner Tank Id: Not reported
SWRCB Tank Id: Not reported
Tank Status: Not reported
Capacity: Not reported
Active Date: Not reported
Tank Use: Not reported
STG: Not reported
Content: Not reported
Number Of Tanks: Not reported

WIP:
Region: 4
File Number: 111.2660
File Status: Historical
Staff: JWOO
Facility Suite: Not reported

ENVIROSTOR:
Facility ID: 60001692
Status: No Further Action
Status Date: 02/28/1997
Site Code: Not reported
Site Type: Evaluation
Site Type Detailed: Evaluation
Acres: 0
NPL: NO
Regulatory Agencies: LOS ANGELES COUNTY
Lead Agency: LOS ANGELES COUNTY
Program Manager: Not reported
Supervisor: Douglas Bautista
Division Branch: Cleanup Cypress
Assembly: 39
Senate: 20
Special Program: Not reported
Restricted Use: NO
Site Mgmt Req: NONE SPECIFIED
Funding: EPA Grant
Latitude: 34.27097
Longitude: -118.4256
APN: NONE SPECIFIED
Past Use: NONE SPECIFIED
Potential COC: NONE SPECIFIED No Contaminants found
Confirmed COC: No Contaminants found
Potential Description: NONE SPECIFIED
Alias Name: 60001692

FRED E MARSHALL CONSTRUCTION (Continued) **S101585215**

Alias Type: Envirostor ID Number

Completed Info:
Completed Area Name: PROJECT WIDE
Completed Sub Area Name: Not reported
Completed Document Type: Site Screening
Completed Date: 02/28/1997
Comments: No further action

Future Area Name: Not reported
Future Sub Area Name: Not reported
Future Document Type: Not reported
Future Due Date: Not reported
Schedule Area Name: Not reported
Schedule Sub Area Name: Not reported
Schedule Document Type: Not reported
Schedule Due Date: Not reported
Schedule Revised Date: Not reported

66
NE
1/2-1
0.917 mi.
4844 ft.

Relative:
Higher

Actual:
1042 ft.

PRICE PFISTER INC
13500 PAXTON ST
PACOIMA, CA 91331

HIST CORTESE **S100942803**
LUST **N/A**
SLIC
LA Co. Site Mitigation
WIP
EMI
ENVIROSTOR
WDS

HIST CORTESE:
Region: CORTESE
Facility County Code: 19
Reg By: LTNKA
Reg Id: 913311034

LUST REG 4:
Region: 4
Regional Board: 04
County: Los Angeles
Facility Id: 913311034
Status: Pollution Characterization
Substance: Solvents
Substance Quantity: Not reported
Local Case No: Not reported
Case Type: Groundwater
Abatement Method Used at the Site: Not reported
Global ID: T0603702198
W Global ID: Not reported
Staff: TOX
Local Agency: 19050
Cross Street: SAN FERNANDO RD
Enforcement Type: Not reported
Date Leak Discovered: Not reported
Date Leak First Reported: 11/18/1983
Date Leak Record Entered: 12/31/1986
Date Confirmation Began: Not reported
Date Leak Stopped: Not reported
Date Case Last Changed on Database: 4/11/1990
Date the Case was Closed: Not reported

PRICE PFISTER INC (Continued) **S100942803**

How Leak Discovered:	Not reported
How Leak Stopped:	Not reported
Cause of Leak:	UNK
Leak Source:	Tank
Operator:	Not reported
Water System:	Not reported
Well Name:	Not reported
Approx. Dist To Production Well (ft):	9969.7197969867241335947766 69
Source of Cleanup Funding:	Tank
Preliminary Site Assessment Workplan Submitted:	Not reported
Preliminary Site Assessment Began:	Not reported
Pollution Characterization Began:	3/21/1988
Remediation Plan Submitted:	Not reported
Remedial Action Underway:	Not reported
Post Remedial Action Monitoring Began:	Not reported
Enforcement Action Date:	Not reported
Historical Max MTBE Date:	Not reported
Hist Max MTBE Conc in Groundwater:	Not reported
Hist Max MTBE Conc in Soil:	Not reported
Significant Interim Remedial Action Taken:	Yes
GW Qualifier:	Not reported
Soil Qualifier:	Not reported
Organization:	Not reported
Owner Contact:	Not reported
Responsible Party:	BLANK RP
RP Address:	Not reported
Program:	SLIC
Lat/Long:	34.2732311 / -1
Local Agency Staff:	PEJ
Beneficial Use:	Not reported
Priority:	Not reported
Cleanup Fund Id:	Not reported
Suspended:	Not reported
Assigned Name:	Not reported
Summary:	WATER SAMPLE ANALYSIS RESULTS PENDING. PARTY DIRECTED TO SUBMIT RESULTS AT A CLUSTER OF TANKS WHICH CONTAINED CUTTING & HYDRAULIC OILS. WIP CASE #111.2656

SLIC:

Region:	STATE
Facility Status:	**Open - Remediation**
Status Date:	03/24/2010
Global Id:	SL0603719273
Lead Agency:	LOS ANGELES RWQCB (REGION 4)
Lead Agency Case Number:	Not reported
Latitude:	34.27293
Longitude:	-118.425213
Case Type:	Cleanup Program Site
Case Worker:	MZ
Local Agency:	Not reported
RB Case Number:	111.2696
File Location:	Regional Board
Potential Media Affected:	Aquifer used for drinking water supply, Indoor Air, Other Groundwater (uses other than drinking water), Soil, Soil Vapor
Potential Contaminants of Concern:	Other Chlorinated Hydrocarbons, Other Solvent or Non-Petroleum Hydrocarbon, Tetrachloroethylene (PCE), Trichloroethylene (TCE), Polychlorinated biphenyls (PCBs), Chromium, Lead, Other Metal, Diesel,

PRICE PFISTER INC (Continued) **S100942803**

Gasoline, Other Petroleum, Waste Oil / Motor / Hydraulic / Lubricating, Polynuclear aromatic hydrocarbons (PAHs)

Site History: Price Pfister (PP), and subsequently Black and Decker (B&D), manufactured plumbing fixtures on a 25 acre site in the Pacoima area. This site is located south of another site, Holchem, which is under oversight by DTSC. In preparation for redevelopment as a shopping area, staff has overseen onsite investigations and cleanup, largely through excavation and removal of heavily contaminated soils, soil vapor extraction, and air sparging. As documented in our March 4, 2009 letter, there were two main and other volatile organic compound (VOCs) source areas in Areas 1 through 6 and 8 of the site (See attached Figure 1). One was located in the former Oil Staging Area (OSA in Area 4), and second consisting of the Barron degreaser and the two Delta degreasers was located in the former Building P area (Area 3) of the Price Pfister site. Other VOC source areas included the two sumps and a clarifier in the Plating line in the Building P Area (Area 2), and a sump in the Machine Shop area of the Building P area. As required by the Regional Board, Price Pfister remediated the VOC-contaminated soil in the above two main source areas using soil vapor extraction (SVE), and later excavated and removed the VOC-contaminated soil from several locations. Price Pfister also conducted a site-wide soil gas survey of the site during September 2007. Price Pfister submitted the Human Health Risk Assessment (Final HHRA) for Areas 1 through 5 and 8, Former Price Pfister Site, dated July 23, 2008, and the Final Human Health Risk Assessment for Areas 1 through 5 and 8, Former Price Pfister Site, dated October 2, 2008. At the request of the Regional Board staff, California Department of Toxic Substances Control (DTSC) Human and Ecological Risk Division (HERD) reviewed those reports, and, in their letter dated November 7, 2008, determined that the Final HHRA for Areas 1 through 5 and 8 was acceptable. DTSC-HERD also reviewed the Draft Human Health Risk Assessment for Areas 6 and 7, dated November 13, 2008, and in their comment letter dated January 7, 2009, concurred with the risk assessment methodology and results and listed their future requirements. In addition, in order to confirm that the previous soil vapor extraction operations had removed any residual VOCs in soil matrix, Price Pfister collected soil matrix confirmation samples from the two known VOCs source areas in OSA and Building P degreasers area, submitted the Results of Soil Sampling for Volatile Organic Compounds, Probe Abandonment, and Request for No Further Action for VOCs in Soil 13500 Paxton Street, Pacoima, California dated July 16, 2008. Based on our review of the analytical results, no VOCs were detected above the mobile laboratory reporting limit of 0.0010 mg/kg, which is lower than our approved soil matrix cleanup goal {e.g., 0.060 milligram per kilogram (mg/kg) for both PCE and trichloroethylene (TCE)}. However, PCE concentrations in soil gas samples, collected from monitoring well SVMW-202 (located near the Building P degreaser area) on September 13, 2007 after rebound test (as documented in the report titled Results of Rebound Testing for Soil Vapor Extraction System 13500 Paxton Street, Pacoima, California, dated December 20, 2007), were 1.9 micrograms per liter (a%g/L) at 15 feet below ground surface (bgs), 13 a%g/L at 30 feet bgs, and 20 a%g/L at 45 feet bgs. Similarly, a soil gas sample collected from 30 feet bgs in monitoring well PMW-11 (located adjacent to the former OSA) was reported to contain 3.3 a%g/L and 7.3 a%g/L of PCE, at 15 and 30 feet bgs, respectively. Other significant PCE concentrations detected on September 13, 2007 after the rebound

PRICE PFISTER INC (Continued) **S100942803**

were: 10 a%g/L at 45 feet bgs in monitoring well PMW-9, 15 a%g/L at 60 feet bgs in monitoring well PMW-13, and 7.9 a%g/L at 59 feet bgs in monitoring well SVMW-226. Staff believes that the decreasing concentration trend toward ground surface indicates probable offgasing of PCE from the underlying dissolved VOCs groundwater plume. Therefore, in order to remove any PCE offgasing from the onsite and offsite VOC groundwater plume, staff has determined that it was necessary to continue operating the SVE well PSVE-10 in Area 6 until the PCE concentrations in the plume are stabilized as close as possible to the PCE maximum contaminant level (MCL) of 5a%g/L, and also to continue semi-annual monitoring of VOCs in soil vapor from the multi-depth soil vapor monitoring well SVMW-226. Based on the information provided in your reports on Areas 1 through 6 and 8 of the site for our review, and with the provision that the information provided to Regional Board staff was accurate and representative of the site conditions, and based on acceptance of the Final HHRA for Areas 1 through 5 and 8 by DTSC-HERD, we approved a no further action for VOCs in soil in all the reported, investigated, and remediated source areas in Areas 1 through 6 and 8 of the former Price Pfister site overseen by the Regional Board staff, subject to compliance with the following conditions: 1. Price Pfister shall continue the semi-annual groundwater monitoring of their onsite and offsite VOCs and TPH plumes using all the Regional Board-required groundwater monitoring wells until approved cleanup goals are achieved and maintained thereafter for a period of one year. 2. Price Pfister shall continue the quarterly groundwater monitoring of their onsite and offsite hexavalent chromium and 1,4-dioxane groundwater plumes using all the Regional Board-required wells used for delineation of the plumes until groundwater cleanup goals are achieved through implementation of a Regional Board-approved remedial action plan and maintained thereafter for a period of one year. 3. Price Pfister shall continue to monitor multi-depth soil vapor well SVMW-226, and other DTSC-required multi-depth soil gas probes in Area 6, and shall continue operating the SVE well PSVE-10 using its connection to the Area 7 SVE system, until the PCE concentrations in the underlying VOC groundwater plume are stabilized as close as possible to the PCE maximum contaminant level (MCL) of 5a%g/L and remain at that stable concentration for a period of one year. 4. Price Pfister shall continue to comply with the deed restriction recorded for the site to limit future land uses to industrial/commercial purposes and to prohibit groundwater use. 5. Price Pfister shall continue to implement our requirements as stated in all our directives until site closure is obtained. If, in future, any uninvestigated contaminant source areas resulting from former Price Pfister operations are discovered at the site, Regional Board will hold Black & Decker (or Price Pfister) or the current property owner, legally liable and responsible for conducting and completing any site investigations and cleanup of such remaining contaminant source areas as required by the Regional Board. Removal of free hydrocarbon product and remediation of TPH (mostly C12 to C44) and VOCs contaminated soil and underlying groundwater in the Former Building A Area (approxim. 300 feet long, 200 feet wide, and 66 feet deep) included in Area 7 still remains to be completed, and PP has selected bioventing as the soil remediation technology. In our November 25, 2009 13267 Order, Regional Board required PP to submit a revised Workplan for Area 7 Bench Scale Tests by December 30, 2009, a Technical Demonstration Report (i.e., microbial evaluation report) by December 30, 2009, and a Field Pilot

PRICE PFISTER INC (Continued) **S100942803**

Test Workplan (a technical report) to perform a field pilot test by March 15, 2010. During the December 14, 2009 meeting with the representatives of Price Pfister, Price Pfister requested Regional Board staff to consider the rescission of the November 25, 2009 requirements for the submittal of the above technical reports because, as presented by Price Pfisters expert consultants at the meeting, bioventing is a well demonstrated soil bioremediation technology for petroleum hydrocarbons, and Area 7 is suitable for bioventing based on a respirometry field test conducted in 2008. It was also agreed at the meeting that site specific bioventing design parameters would need to be developed and evaluated to ensure effectiveness of bioventing as the selected remedial technology. Based on our agreement at the December 14, 2009 meeting, the November 25, 2009 13267 Order was rescinded and replaced with the requirements below, issued under California Water Code 13267 Order. As we discussed at the December 14, 2009 meeting, PP agreed and is required to submit a full-scale bioventing design report for Area 7 as described below. By March 15, 2010, PP is required to submit a full-scale bioventing design report for Area 7 for our review and approval. The design report shall demonstrate adequate delivery of oxygen for effective remediation of Area 7 by using bioventing technology. The report shall include detailed plots, analysis, interpretation of the laboratory and field data, design parameters (including but not limited to the radius of influence, design flow rate, remedial well spacing), and remedial progress evaluation plan. PP has submitted the Design Report for In-Situ Bioventing to the Regional Board for review.

Click here to access the California GeoTracker records for this facility:

LA Co. Site Mitigation:

Facility ID:	Not reported
Site ID:	SD0000408
Jurisdiction:	State
Case ID:	RO0001409
Abated:	Yes
Assigned To:	Kim Clark
Entered Date:	10/11/2011

WIP:

Region:	4
File Number:	111.2696
File Status:	**Active**
Staff:	MZAIDI
Facility Suite:	Not reported

EMI:

Year:	1987
County Code:	19
Air Basin:	SC
Facility ID:	22808
Air District Name:	SC
SIC Code:	3432
Air District Name:	SOUTH COAST AQMD
Community Health Air Pollution Info System:	Not reported
Consolidated Emission Reporting Rule:	Not reported

PRICE PFISTER INC (Continued) **S100942803**

Total Organic Hydrocarbon Gases Tons/Yr:	52
Reactive Organic Gases Tons/Yr:	3
Carbon Monoxide Emissions Tons/Yr:	1
NOX - Oxides of Nitrogen Tons/Yr:	5
SOX - Oxides of Sulphur Tons/Yr:	0
Particulate Matter Tons/Yr:	14
Part. Matter 10 Micrometers & Smllr Tons/Yr:	12

Year:	1990
County Code:	19
Air Basin:	SC
Facility ID:	22808
Air District Name:	SC
SIC Code:	3432
Air District Name:	SOUTH COAST AQMD
Community Health Air Pollution Info System:	Not reported
Consolidated Emission Reporting Rule:	Not reported
Total Organic Hydrocarbon Gases Tons/Yr:	66
Reactive Organic Gases Tons/Yr:	0
Carbon Monoxide Emissions Tons/Yr:	2
NOX - Oxides of Nitrogen Tons/Yr:	6
SOX - Oxides of Sulphur Tons/Yr:	0
Particulate Matter Tons/Yr:	14
Part. Matter 10 Micrometers & Smllr Tons/Yr:	12

Year:	1995
County Code:	19
Air Basin:	SC
Facility ID:	22808
Air District Name:	SC
SIC Code:	3432
Air District Name:	SOUTH COAST AQMD
Community Health Air Pollution Info System:	Not reported
Consolidated Emission Reporting Rule:	Not reported
Total Organic Hydrocarbon Gases Tons/Yr:	56
Reactive Organic Gases Tons/Yr:	20
Carbon Monoxide Emissions Tons/Yr:	1
NOX - Oxides of Nitrogen Tons/Yr:	10
SOX - Oxides of Sulphur Tons/Yr:	0
Particulate Matter Tons/Yr:	13
Part. Matter 10 Micrometers & Smllr Tons/Yr:	11

Year:	1996
County Code:	19
Air Basin:	SC
Facility ID:	22808
Air District Name:	SC
SIC Code:	3432
Air District Name:	SOUTH COAST AQMD
Community Health Air Pollution Info System:	Not reported
Consolidated Emission Reporting Rule:	Not reported
Total Organic Hydrocarbon Gases Tons/Yr:	11
Reactive Organic Gases Tons/Yr:	7
Carbon Monoxide Emissions Tons/Yr:	2
NOX - Oxides of Nitrogen Tons/Yr:	7
SOX - Oxides of Sulphur Tons/Yr:	0
Particulate Matter Tons/Yr:	21

PRICE PFISTER INC (Continued) **S100942803**

Part. Matter 10 Micrometers & Smllr Tons/Yr:	18

Year:	1997
County Code:	19
Air Basin:	SC
Facility ID:	22808
Air District Name:	SC
SIC Code:	3432
Air District Name:	SOUTH COAST AQMD
Community Health Air Pollution Info System:	Not reported
Consolidated Emission Reporting Rule:	Not reported
Total Organic Hydrocarbon Gases Tons/Yr:	9
Reactive Organic Gases Tons/Yr:	7
Carbon Monoxide Emissions Tons/Yr:	1
NOX - Oxides of Nitrogen Tons/Yr:	3
SOX - Oxides of Sulphur Tons/Yr:	0
Particulate Matter Tons/Yr:	9
Part. Matter 10 Micrometers & Smllr Tons/Yr:	7

Year:	1998
County Code:	19
Air Basin:	SC
Facility ID:	22808
Air District Name:	SC
SIC Code:	3432
Air District Name:	SOUTH COAST AQMD
Community Health Air Pollution Info System:	Not reported
Consolidated Emission Reporting Rule:	Not reported
Total Organic Hydrocarbon Gases Tons/Yr:	8
Reactive Organic Gases Tons/Yr:	6
Carbon Monoxide Emissions Tons/Yr:	1
NOX - Oxides of Nitrogen Tons/Yr:	3
SOX - Oxides of Sulphur Tons/Yr:	0
Particulate Matter Tons/Yr:	9
Part. Matter 10 Micrometers & Smllr Tons/Yr:	7

Year:	1999
County Code:	19
Air Basin:	SC
Facility ID:	22808
Air District Name:	SC
SIC Code:	3432
Air District Name:	SOUTH COAST AQMD
Community Health Air Pollution Info System:	Not reported
Consolidated Emission Reporting Rule:	Not reported
Total Organic Hydrocarbon Gases Tons/Yr:	9
Reactive Organic Gases Tons/Yr:	7
Carbon Monoxide Emissions Tons/Yr:	1
NOX - Oxides of Nitrogen Tons/Yr:	3
SOX - Oxides of Sulphur Tons/Yr:	0
Particulate Matter Tons/Yr:	9
Part. Matter 10 Micrometers & Smllr Tons/Yr:	7

Year:	2000
County Code:	19
Air Basin:	SC
Facility ID:	22808

PRICE PFISTER INC (Continued) **S100942803**

Air District Name:	SC
SIC Code:	3432
Air District Name:	SOUTH COAST AQMD
Community Health Air Pollution Info System:	Not reported
Consolidated Emission Reporting Rule:	Not reported
Total Organic Hydrocarbon Gases Tons/Yr:	9
Reactive Organic Gases Tons/Yr:	7
Carbon Monoxide Emissions Tons/Yr:	1
NOX - Oxides of Nitrogen Tons/Yr:	3
SOX - Oxides of Sulphur Tons/Yr:	0
Particulate Matter Tons/Yr:	9
Part. Matter 10 Micrometers & Smllr Tons/Yr:	7

Year:	2001
County Code:	19
Air Basin:	SC
Facility ID:	22808
Air District Name:	SC
SIC Code:	3432
Air District Name:	SOUTH COAST AQMD
Community Health Air Pollution Info System:	Y
Consolidated Emission Reporting Rule:	Not reported
Total Organic Hydrocarbon Gases Tons/Yr:	0
Reactive Organic Gases Tons/Yr:	0
Carbon Monoxide Emissions Tons/Yr:	1
NOX - Oxides of Nitrogen Tons/Yr:	2
SOX - Oxides of Sulphur Tons/Yr:	0
Particulate Matter Tons/Yr:	7
Part. Matter 10 Micrometers & Smllr Tons/Yr:	5

ENVIROSTOR:

Facility ID:	71002225
Status:	Refer: Other Agency
Status Date:	Not reported
Site Code:	Not reported
Site Type:	Tiered Permit
Site Type Detailed:	Tiered Permit
Acres:	Not reported
NPL:	NO
Regulatory Agencies:	NONE SPECIFIED
Lead Agency:	NONE SPECIFIED
Program Manager:	Not reported
Supervisor:	Not reported
Division Branch:	Cleanup Chatsworth
Assembly:	39
Senate:	20
Special Program:	Not reported
Restricted Use:	NO
Site Mgmt Req:	NONE SPECIFIED
Funding:	Not reported
Latitude:	34.27332
Longitude:	-118.4266
APN:	NONE SPECIFIED
Past Use:	NONE SPECIFIED
Potential COC:	NONE SPECIFIED
Confirmed COC:	NONE SPECIFIED
Potential Description:	NONE SPECIFIED

PRICE PFISTER INC (Continued) **S100942803**

Alias Name: CAD008384190
Alias Type: EPA Identification Number
Alias Name: 110000476878
Alias Type: EPA (FRS #)
Alias Name: 71002225
Alias Type: Envirostor ID Number

Completed Info:
Completed Area Name: Not reported
Completed Sub Area Name: Not reported
Completed Document Type: Not reported
Completed Date: Not reported
Comments: Not reported

Future Area Name: Not reported
Future Sub Area Name: Not reported
Future Document Type: Not reported
Future Due Date: Not reported
Schedule Area Name: Not reported
Schedule Sub Area Name: Not reported
Schedule Document Type: Not reported
Schedule Due Date: Not reported
Schedule Revised Date: Not reported

Facility ID: 19340768
Status: Refer: RWQCB
Status Date: 08/10/2000
Site Code: 300594
Site Type: Evaluation
Site Type Detailed: Evaluation
Acres: 0
NPL: NO
Regulatory Agencies: NONE SPECIFIED
Lead Agency: NONE SPECIFIED
Program Manager: Not reported
Supervisor: Juli Propes
Division Branch: Cleanup Chatsworth
Assembly: 39
Senate: 20
Special Program: Not reported
Restricted Use: NO
Site Mgmt Req: NONE SPECIFIED
Funding: EPA Grant
Latitude: 34.27361
Longitude: -118.4266
APN: NONE SPECIFIED
Past Use: NONE SPECIFIED
Potential COC: NONE SPECIFIED
Confirmed COC: NONE SPECIFIED
Potential Description: NONE SPECIFIED
Alias Name: CAD008384190
Alias Type: CERCLIS ID
Alias Name: 110000476878
Alias Type: EPA (FRS #)
Alias Name: SL0603719273
Alias Type: GeoTracker Global ID
Alias Name: 300594
Alias Type: Project Code (Site Code)

PRICE PFISTER INC (Continued) **S100942803**

Alias Name: 19340768
Alias Type: Envirostor ID Number

Completed Info:

Completed Area Name: PROJECT WIDE
Completed Sub Area Name: Not reported
Completed Document Type: * Discovery
Completed Date: 05/30/1996
Comments: U.S. EPA is conducting a PEA/SI on this site.

Completed Area Name: PROJECT WIDE
Completed Sub Area Name: Not reported
Completed Document Type: Preliminary Endangerment Assessment Report
Completed Date: 09/30/1999
Comments: Preliminary Endangerment Assessment/Site Investigation was conducted at a plumbing manufacturing company for the U.S. EPA through the CERCLA grant. Soil and groundwater sampling detected contamination under the site. Further action is required.

Completed Area Name: PROJECT WIDE
Completed Sub Area Name: Not reported
Completed Document Type: Preliminary Endangerment Assessment Report
Completed Date: 04/21/1998
Comments: Not reported

Completed Area Name: PROJECT WIDE
Completed Sub Area Name: Not reported
Completed Document Type: Technical Workplan
Completed Date: 07/17/2008
Comments: DTSC reviewed and commented the HHRA Work Plan and the Site-Wide Soil Gas Survey Report

Completed Area Name: PROJECT WIDE
Completed Sub Area Name: Not reported
Completed Document Type: Risk Assessment Report
Completed Date: 09/11/2008
Comments: DTSC provided comments under the terms of the Agreement.

Completed Area Name: PROJECT WIDE
Completed Sub Area Name: Not reported
Completed Document Type: Other Report
Completed Date: 11/07/2008
Comments: DTSC has not identified any issues that would imply changes in the Report.

Completed Area Name: PROJECT WIDE
Completed Sub Area Name: Not reported
Completed Document Type: Other Report
Completed Date: 11/07/2008
Comments: DTSC approved the Final HHRA Report (with additional info) for Areas 1 to 5 and 8.

Completed Area Name: PROJECT WIDE
Completed Sub Area Name: Not reported
Completed Document Type: Technical Workplan
Completed Date: 11/10/2008
Comments: DTSC entered into this agreement with Price-pfister.

PRICE PFISTER INC (Continued) **S100942803**

Completed Area Name:	PROJECT WIDE
Completed Sub Area Name:	Not reported
Completed Document Type:	Technical Workplan
Completed Date:	11/13/2008
Comments:	DTSC has not identified any issues that would require modifications of the proposed work plan addendum.

Completed Area Name:	PROJECT WIDE
Completed Sub Area Name:	Not reported
Completed Document Type:	Reimbursement Agreement
Completed Date:	07/16/2008
Comments:	The Reimbursement Agreement was fully executed on 7/16/2008.

Future Area Name:	Not reported
Future Sub Area Name:	Not reported
Future Document Type:	Not reported
Future Due Date:	Not reported
Schedule Area Name:	Not reported
Schedule Sub Area Name:	Not reported
Schedule Document Type:	Not reported
Schedule Due Date:	Not reported
Schedule Revised Date:	Not reported

CA WDS:

Facility ID:	4 19I002357
Facility Type:	Industrial - Facility that treats and/or disposes of liquid or semisolid wastes from any servicing, producing, manufacturing or processing operation of whatever nature, including mining, gravel washing, geothermal operations, air conditioning, ship building and repairing, oil production, storage and disposal operations, water pumping.
Facility Status:	Active - Any facility with a continuous or seasonal discharge that is under Waste Discharge Requirements.
NPDES Number:	CAS000001 The 1st 2 characters designate the state. The remaining 7 are assigned by the Regional Board
Subregion:	4
Facility Telephone:	8186864304
Facility Contact:	DENELLE ROZELL
Agency Name:	PRICE PFISTER INC
Agency Address:	13500 Paxton St
Agency City,St,Zip:	Pacoima 913312371
Agency Contact:	DENELLE ROZELL
Agency Telephone:	8186864304
Agency Type:	Private
SIC Code:	0
SIC Code 2:	Not reported
Primary Waste Type:	Not reported
Primary Waste:	Not reported
Waste Type2:	Not reported
Waste2:	Not reported
Primary Waste Type:	Not reported
Secondary Waste:	Not reported
Secondary Waste Type:	Not reported
Design Flow:	0
Baseline Flow:	0
Reclamation:	Not reported
POTW:	Not reported

PRICE PFISTER INC (Continued) **S100942803**

Treat To Water: Minor Threat to Water Quality. A violation of a regional board order should cause a relatively minor impairment of beneficial uses compared to a major or minor threat. Not: All nurds without a TTWQ will be considered a minor threat to water quality unless coded at a higher Level. A Zero (0) may be used to code those NURDS that are found to represent no threat to water quality.

Complexity: Category C - Facilities having no waste treatment systems, such as cooling water dischargers or thosewho must comply through best management practices, facilities with passive waste treatment and disposal systems, such as septic systems with subsurface disposal, or dischargers having waste storage systems with land disposal such as dairy waste ponds.

I67
NE
1/2-1
0.920 mi.
4860 ft.

SUTTER AVENUE PROPERTIES **VCP** **S109034322**
11101; 11151; AND 11074 SUTTER STREET **ENVIROSTOR** **N/A**
PACOIMA, CA 91331

Site 2 of 3 in cluster I

Relative:
Higher

Actual:
1029 ft.

VCP:

Facility ID:	60000885
Site Type:	Voluntary Cleanup
Site Type Detail:	Voluntary Cleanup
Site Mgmt. Req.:	NONE SPECIFIED
Acres:	2.55
National Priorities List:	NO
Cleanup Oversight Agencies:	SMBRP
Lead Agency:	SMBRP
Lead Agency Description:	DTSC - Site Cleanup Program
Project Manager:	Not reported
Supervisor:	Juli Propes
Division Branch:	Cleanup Chatsworth
Site Code:	301385
Assembly:	39
Senate:	20
Special Programs Code:	Voluntary Cleanup Program
Status:	No Further Action
Status Date:	12/10/2008
Restricted Use:	NO
Funding:	Responsible Party
Lat/Long:	34.27076 / -118.4256
APN:	NONE SPECIFIED
Past Use:	NONE SPECIFIED
Potential COC:	30001
Confirmed COC:	30001
Potential Description:	SOIL
Alias Name:	301385
Alias Type:	Project Code (Site Code)
Alias Name:	60000885
Alias Type:	Envirostor ID Number

Completed Info:

Completed Area Name:	PROJECT WIDE
Completed Sub Area Name:	Not reported
Completed Document Type:	No Further Action Letter
Completed Date:	05/29/2008
Comments:	Based on the data from the soil gas survey, DTSC determined that no further action is required at the Site.

SUTTER AVENUE PROPERTIES (Continued) **S109034322**

Completed Area Name: PROJECT WIDE
Completed Sub Area Name: Not reported
Completed Document Type: Site Characterization Workplan
Completed Date: 05/28/2008
Comments: DTSC performed an expedited review of the work plan.

Completed Area Name: PROJECT WIDE
Completed Sub Area Name: Not reported
Completed Document Type: Site Characterization Report
Completed Date: 05/29/2008
Comments: The VCA was completed in expedited manner.

Completed Area Name: PROJECT WIDE
Completed Sub Area Name: Not reported
Completed Document Type: Voluntary Cleanup Agreement
Completed Date: 04/04/2008
Comments: DTSC did an expedited review.

Future Area Name: Not reported
Future Sub Area Name: Not reported
Future Document Type: Not reported
Future Due Date: Not reported
Schedule Area Name: Not reported
Schedule Sub Area Name: Not reported
Schedule Document Type: Not reported
Schedule Due Date: Not reported
Schedule Revised Date: Not reported

ENVIROSTOR:
Facility ID: 60000885
Status: No Further Action
Status Date: 12/10/2008
Site Code: 301385
Site Type: Voluntary Cleanup
Site Type Detailed: Voluntary Cleanup
Acres: 2.55
NPL: NO
Regulatory Agencies: SMBRP
Lead Agency: SMBRP
Program Manager: Not reported
Supervisor: Juli Propes
Division Branch: Cleanup Chatsworth
Assembly: 39
Senate: 20
Special Program: Voluntary Cleanup Program
Restricted Use: NO
Site Mgmt Req: NONE SPECIFIED
Funding: Responsible Party
Latitude: 34.27076
Longitude: -118.4256
APN: NONE SPECIFIED
Past Use: NONE SPECIFIED
Potential COC: Arsenic
Confirmed COC: Arsenic
Potential Description: SOIL
Alias Name: 301385
Alias Type: Project Code (Site Code)

SUTTER AVENUE PROPERTIES (Continued) **S109034322**

Alias Name: 60000885
Alias Type: Envirostor ID Number

Completed Info:
Completed Area Name: PROJECT WIDE
Completed Sub Area Name: Not reported
Completed Document Type: No Further Action Letter
Completed Date: 05/29/2008
Comments: Based on the data from the soil gas survey, DTSC determined that no further action is required at the Site.

Completed Area Name: PROJECT WIDE
Completed Sub Area Name: Not reported
Completed Document Type: Site Characterization Workplan
Completed Date: 05/28/2008
Comments: DTSC performed an expedited review of the work plan.

Completed Area Name: PROJECT WIDE
Completed Sub Area Name: Not reported
Completed Document Type: Site Characterization Report
Completed Date: 05/29/2008
Comments: The VCA was completed in expedited manner.

Completed Area Name: PROJECT WIDE
Completed Sub Area Name: Not reported
Completed Document Type: Voluntary Cleanup Agreement
Completed Date: 04/04/2008
Comments: DTSC did an expedited review.

Future Area Name: Not reported
Future Sub Area Name: Not reported
Future Document Type: Not reported
Future Due Date: Not reported
Schedule Area Name: Not reported
Schedule Sub Area Name: Not reported
Schedule Document Type: Not reported
Schedule Due Date: Not reported
Schedule Revised Date: Not reported

I68 **PARAGON / KLEINERT/ D&M** **SLIC** **S105520878**
NE **11035 SUTTER AVE** **LA Co. Site Mitigation** **N/A**
1/2-1 **PACOIMA, CA 91331** **ENF**
0.926 mi. **RESPONSE**
4890 ft. **Site 3 of 3 in cluster I** **ENVIROSTOR**

Relative:
Higher

Actual:
1028 ft.

SLIC:
Region: STATE
Facility Status: **Open - Inactive**
Status Date: 10/30/2014
Global Id: SL603799082
Lead Agency: DEPARTMENT OF TOXIC SUBSTANCES CONTROL
Lead Agency Case Number: 60000652
Latitude: 34.27049
Longitude: -118.425831
Case Type: Cleanup Program Site
Case Worker: Not reported
Local Agency: Not reported
RB Case Number: Not reported

PARAGON / KLEINERT/ D&M (Continued) **S105520878**

File Location:	DTSC
Potential Media Affected:	Aquifer used for drinking water supply
Potential Contaminants of Concern:	Not reported
Site History:	Case tranferred to DTSC on 4/17/2007.

Click here to access the California GeoTracker records for this facility:

Region:	STATE
Facility Status:	**Completed - Case Closed**
Status Date:	04/29/2009
Global Id:	SLT4308381
Lead Agency:	DEPARTMENT OF TOXIC SUBSTANCES CONTROL
Lead Agency Case Number:	60000652
Latitude:	34.27049
Longitude:	-118.425831
Case Type:	Cleanup Program Site
Case Worker:	Not reported
Local Agency:	Not reported
RB Case Number:	Not reported
File Location:	DTSC
Potential Media Affected:	Not reported
Potential Contaminants of Concern:	Not reported
Site History:	Not reported

Click here to access the California GeoTracker records for this facility:

SLIC REG 4:

Region:	4
Facility Status:	Inactive
SLIC:	0141
Substance:	TPH/V
Staff:	Not reported

LA Co. Site Mitigation:

Facility ID:	Not reported
Site ID:	SD0010276
Jurisdiction:	County
Case ID:	RO0001057
Abated:	Yes
Assigned To:	LR
Entered Date:	05/11/2004

ENF:

Region:	4
Facility Id:	218904
Agency Name:	D & M STEEL INC.
Place Type:	Facility
Place Subtype:	Not reported
Facility Type:	Not reported
Agency Type:	Privately-Owned Business
# Of Agencies:	1
Place Latitude:	34.27044
Place Longitude:	-118.425339
SIC Code 1:	Not reported
SIC Desc 1:	Not reported
SIC Code 2:	Not reported

PARAGON / KLEINERT/ D&M (Continued) **S105520878**

SIC Desc 2:	Not reported
SIC Code 3:	Not reported
SIC Desc 3:	Not reported
NAICS Code 1:	Not reported
NAICS Desc 1:	Not reported
NAICS Code 2:	Not reported
NAICS Desc 2:	Not reported
NAICS Code 3:	Not reported
NAICS Desc 3:	Not reported
# Of Places:	1
Source Of Facility:	Reg Meas
Design Flow:	Not reported
Threat To Water Quality:	Not reported
Complexity:	Not reported
Pretreatment:	Not reported
Facility Waste Type:	Not reported
Facility Waste Type 2:	Not reported
Facility Waste Type 3:	Not reported
Facility Waste Type 4:	Not reported
Program:	WIP
Program Category1:	MONITORING
Program Category2:	MONITORING
# Of Programs:	1
WDID:	4WIP1112691
Reg Measure Id:	154552
Reg Measure Type:	Unregulated
Region:	4
Order #:	Not reported
Npdes# CA#:	Not reported
Major-Minor:	Not reported
Npdes Type:	Not reported
Reclamation:	Not reported
Dredge Fill Fee:	Not reported
301H:	Not reported
Application Fee Amt Received:	Not reported
Status:	Never Active
Status Date:	02/20/2013
Effective Date:	Not reported
Expiration/Review Date:	Not reported
Termination Date:	Not reported
WDR Review - Amend:	Not reported
WDR Review - Revise/Renew:	Not reported
WDR Review - Rescind:	Not reported
WDR Review - No Action Required:	Not reported
WDR Review - Pending:	Not reported
WDR Review - Planned:	Not reported
Status Enrollee:	N
Individual/General:	I
Fee Code:	Not reported
Direction/Voice:	Passive
Enforcement Id(EID):	221255
Region:	4
Order / Resolution Number:	13267 Letter
Enforcement Action Type:	13267 Letter
Effective Date:	11/09/2000
Adoption/Issuance Date:	Not reported
Achieve Date:	Not reported

PARAGON / KLEINERT/ D&M (Continued) **S105520878**

Termination Date:	11/09/2000
ACL Issuance Date:	Not reported
EPL Issuance Date:	Not reported
Status:	Historical
Title:	Enforcement - 4WIP1112691
Description:	Not reported
Program:	WIP
Latest Milestone Completion Date:	Not reported
# Of Programs1:	1
Total Assessment Amount:	$0.00
Initial Assessed Amount:	$0.00
Liability $ Amount:	$0.00
Project $ Amount:	$0.00
Liability $ Paid:	$0.00
Project $ Completed:	$0.00
Total $ Paid/Completed Amount:	$0.00

RESPONSE:

Facility ID:	60000652
Site Type:	State Response
Site Type Detail:	State Response or NPL
Acres:	0.75
National Priorities List:	NO
Cleanup Oversight Agencies:	SMBRP
Lead Agency Description:	DTSC - Site Cleanup Program
Project Manager:	Not reported
Supervisor:	Juli Propes
Division Branch:	Cleanup Chatsworth
Site Code:	301350
Site Mgmt. Req.:	NONE SPECIFIED
Assembly:	39
Senate:	20
Special Program Status:	Not reported
Status:	No Further Action
Status Date:	04/29/2009
Restricted Use:	NO
Funding:	Responsible Party
Latitude:	34.27048
Longitude:	-118.4258
APN:	2535001013
Past Use:	MANUFACTURING - METAL
Potential COC :	Tetrachloroethylene (PCE Trichloroethylene (TCE
Confirmed COC:	Tetrachloroethylene (PCE Trichloroethylene (TCE
Potential Description:	OTH, SOIL
Alias Name:	2535001013
Alias Type:	APN
Alias Name:	110009266640
Alias Type:	EPA (FRS #)
Alias Name:	SL603799082
Alias Type:	GeoTracker Global ID
Alias Name:	SLT4308381
Alias Type:	GeoTracker Global ID
Alias Name:	300592
Alias Type:	Project Code (Site Code)
Alias Name:	301350
Alias Type:	Project Code (Site Code)
Alias Name:	60000652

PARAGON / KLEINERT/ D&M (Continued) **S105520878**

Alias Type: Envirostor ID Number

Completed Info:

Completed Area Name: PROJECT WIDE
Completed Sub Area Name: Not reported
Completed Document Type: Voluntary Cleanup Agreement
Completed Date: 11/18/2008
Comments: DTSC enetered into this agreement with D&M Steel. Inc. (Proponent).

Completed Area Name: PROJECT WIDE
Completed Sub Area Name: Not reported
Completed Document Type: Preliminary Endangerment Assessment Report
Completed Date: 05/21/1998
Comments: Not reported

Completed Area Name: PROJECT WIDE
Completed Sub Area Name: Not reported
Completed Document Type: Site Screening
Completed Date: 05/30/1996
Comments: PA/SI process for this site is being conducted by U.S. EPA.

Completed Area Name: PROJECT WIDE
Completed Sub Area Name: Not reported
Completed Document Type: *Correspondence - Received
Completed Date: 10/12/2007
Comments: RP responded to Unilateral Order.

Completed Area Name: PROJECT WIDE
Completed Sub Area Name: Not reported
Completed Document Type: Monitoring Report
Completed Date: 04/29/2009
Comments: DTSC recommmends that the existing groundwater monitoring wells be maintained in a state that would allow future sampling.

Completed Area Name: PROJECT WIDE
Completed Sub Area Name: Not reported
Completed Document Type: Unilateral Order (I/SE, RAO, CAO, EPA AO)
Completed Date: 09/18/2007
Comments: The Order requires D&M Steel to conduct appropriate investigation and remediation with DTSC oversight.

Completed Area Name: PROJECT WIDE
Completed Sub Area Name: Not reported
Completed Document Type: No Further Action Letter
Completed Date: 04/29/2009
Comments: DTSC GW Report. Groundwater monitoring showed contamination from off-site sources.

Future Area Name: Not reported
Future Sub Area Name: Not reported
Future Document Type: Not reported
Future Due Date: Not reported
Schedule Area Name: Not reported
Schedule Sub Area Name: Not reported
Schedule Document Type: Not reported
Schedule Due Date: Not reported
Schedule Revised Date: Not reported

PARAGON / KLEINERT/ D&M (Continued) **S105520878**

ENVIROSTOR:

Facility ID:	60000652
Status:	No Further Action
Status Date:	04/29/2009
Site Code:	301350
Site Type:	State Response
Site Type Detailed:	State Response or NPL
Acres:	0.75
NPL:	NO
Regulatory Agencies:	SMBRP
Lead Agency:	SMBRP
Program Manager:	Not reported
Supervisor:	Juli Propes
Division Branch:	Cleanup Chatsworth
Assembly:	39
Senate:	20
Special Program:	Not reported
Restricted Use:	NO
Site Mgmt Req:	NONE SPECIFIED
Funding:	Responsible Party
Latitude:	34.27048
Longitude:	-118.4258
APN:	2535001013
Past Use:	MANUFACTURING - METAL
Potential COC:	Tetrachloroethylene (PCE Trichloroethylene (TCE
Confirmed COC:	Tetrachloroethylene (PCE Trichloroethylene (TCE
Potential Description:	OTH, SOIL
Alias Name:	2535001013
Alias Type:	APN
Alias Name:	110009266640
Alias Type:	EPA (FRS #)
Alias Name:	SL603799082
Alias Type:	GeoTracker Global ID
Alias Name:	SLT4308381
Alias Type:	GeoTracker Global ID
Alias Name:	300592
Alias Type:	Project Code (Site Code)
Alias Name:	301350
Alias Type:	Project Code (Site Code)
Alias Name:	60000652
Alias Type:	Envirostor ID Number

Completed Info:

Completed Area Name:	PROJECT WIDE
Completed Sub Area Name:	Not reported
Completed Document Type:	Voluntary Cleanup Agreement
Completed Date:	11/18/2008
Comments:	DTSC enetered into this agreement with D&M Steel. Inc. (Proponent).
Completed Area Name:	PROJECT WIDE
Completed Sub Area Name:	Not reported
Completed Document Type:	Preliminary Endangerment Assessment Report
Completed Date:	05/21/1998
Comments:	Not reported
Completed Area Name:	PROJECT WIDE
Completed Sub Area Name:	Not reported

PARAGON / KLEINERT/ D&M (Continued) **S105520878**

Completed Document Type: Site Screening
Completed Date: 05/30/1996
Comments: PA/SI process for this site is being conducted by U.S. EPA.

Completed Area Name: PROJECT WIDE
Completed Sub Area Name: Not reported
Completed Document Type: *Correspondence - Received
Completed Date: 10/12/2007
Comments: RP responded to Unilateral Order.

Completed Area Name: PROJECT WIDE
Completed Sub Area Name: Not reported
Completed Document Type: Monitoring Report
Completed Date: 04/29/2009
Comments: DTSC recommmends that the existing groundwater monitoring wells be maintained in a state that would allow future sampling.

Completed Area Name: PROJECT WIDE
Completed Sub Area Name: Not reported
Completed Document Type: Unilateral Order (I/SE, RAO, CAO, EPA AO)
Completed Date: 09/18/2007
Comments: The Order requires D&M Steel to conduct appropriate investigation and remediation with DTSC oversight.

Completed Area Name: PROJECT WIDE
Completed Sub Area Name: Not reported
Completed Document Type: No Further Action Letter
Completed Date: 04/29/2009
Comments: DTSC GW Report. Groundwater monitoring showed contamination from off-site sources.

Future Area Name: Not reported
Future Sub Area Name: Not reported
Future Document Type: Not reported
Future Due Date: Not reported
Schedule Area Name: Not reported
Schedule Sub Area Name: Not reported
Schedule Document Type: Not reported
Schedule Due Date: Not reported
Schedule Revised Date: Not reported

J69 **BURBANK PLATING SERVICES CORPORATION** **RCRA-LQG** **1000161742**
NE **13561 DESMOND ST.** **FINDS** **CAD009603184**
1/2-1 **PACOIMA, CA 91331** **NPDES**
0.970 mi. **CA FID UST**
5120 ft. **Site 1 of 2 in cluster J** **SLIC**
HIST UST
Relative: **SWEEPS UST**
Higher **WIP**
ENF
Actual: **ENVIROSTOR**
1053 ft. **WDS**

RCRA-LQG:
Date form received by agency: 06/15/2010
Facility name: BURBANK PLATING SERVICES
Facility address: 13561 DESMOND ST
PACOIMA, CA 91331

BURBANK PLATING SERVICES CORPORATION (Continued) **1000161742**

EPA ID:	CAD009603184
Mailing address:	DESMOND ST PACOIMA, CA 91331
Contact:	ROBERT SCHEER
Contact address:	13561 DESMOND ST PACOIMA, CA 91331
Contact country:	US
Contact telephone:	(818) 899-1157
Contact email:	INFO@BURBANKPLATING.COM
EPA Region:	09
Land type:	Private
Classification:	Large Quantity Generator
Description:	Handler: generates 1,000 kg or more of hazardous waste during any calendar month; or generates more than 1 kg of acutely hazardous waste during any calendar month; or generates more than 100 kg of any residue or contaminated soil, waste or other debris resulting from the cleanup of a spill, into or on any land or water, of acutely hazardous waste during any calendar month; or generates 1 kg or less of acutely hazardous waste during any calendar month, and accumulates more than 1 kg of acutely hazardous waste at any time; or generates 100 kg or less of any residue or contaminated soil, waste or other debris resulting from the cleanup of a spill, into or on any land or water, of acutely hazardous waste during any calendar month, and accumulates more than 100 kg of that material at any time

Owner/Operator Summary:

Owner/operator name:	BURBANK PLATING SERVICE INC
Owner/operator address:	13561 DESMOND ST PACOIMA, CA 91331
Owner/operator country:	US
Owner/operator telephone:	(818) 899-1157
Legal status:	Private
Owner/Operator Type:	Owner
Owner/Op start date:	01/15/1965
Owner/Op end date:	Not reported
Owner/operator name:	BURBANK PLATING SERVICE CORP
Owner/operator address:	NOT REQUIRED NOT REQUIRED, ME 99999
Owner/operator country:	Not reported
Owner/operator telephone:	(415) 555-1212
Legal status:	Private
Owner/Operator Type:	Owner
Owner/Op start date:	Not reported
Owner/Op end date:	Not reported
Owner/operator name:	BURBANK PLATING SERVICE
Owner/operator address:	Not reported Not reported
Owner/operator country:	Not reported
Owner/operator telephone:	Not reported
Legal status:	Private
Owner/Operator Type:	Operator
Owner/Op start date:	01/15/1965
Owner/Op end date:	Not reported
Owner/operator name:	NOT REQUIRED

BURBANK PLATING SERVICES CORPORATION (Continued) **1000161742**

Owner/operator address: NOT REQUIRED
NOT REQUIRED, ME 99999
Owner/operator country: Not reported
Owner/operator telephone: (415) 555-1212
Legal status: Private
Owner/Operator Type: Operator
Owner/Op start date: Not reported
Owner/Op end date: Not reported

Handler Activities Summary:
U.S. importer of hazardous waste: No
Mixed waste (haz. and radioactive): No
Recycler of hazardous waste: No
Transporter of hazardous waste: No
Treater, storer or disposer of HW: No
Underground injection activity: No
On-site burner exemption: No
Furnace exemption: No
Used oil fuel burner: No
Used oil processor: No
User oil refiner: No
Used oil fuel marketer to burner: No
Used oil Specification marketer: No
Used oil transfer facility: No
Used oil transporter: No

Historical Generators:
Date form received by agency: 01/24/2008
Site name: BURBANK PLATING SERVICES
Classification: Large Quantity Generator

Date form received by agency: 01/12/2006
Site name: BURBANK PLATING SERVICES
Classification: Large Quantity Generator

Date form received by agency: 02/23/2004
Site name: BURBANK PLATING SERVICES
Classification: Large Quantity Generator

Date form received by agency: 02/20/2002
Site name: BURBANK PLATING SERVICES
Classification: Large Quantity Generator

Date form received by agency: 10/12/2000
Site name: BURBANK PLATING SERVICES
Classification: Large Quantity Generator

Date form received by agency: 03/04/1999
Site name: BURBANK PLATING SERVICE
Classification: Large Quantity Generator

Date form received by agency: 09/01/1996
Site name: BURBANK PLATING SERV CORP
Classification: Large Quantity Generator

Date form received by agency: 03/28/1996

BURBANK PLATING SERVICES CORPORATION (Continued) **1000161742**

Site name: BURBANK PLATING SERVICES
Classification: Large Quantity Generator

Date form received by agency: 03/29/1994
Site name: BURBANK PLATING SERVICE
Classification: Large Quantity Generator

Date form received by agency: 02/29/1992
Site name: BURBANK PLATING SERVICE CORP
Classification: Large Quantity Generator

Date form received by agency: 04/10/1990
Site name: BURBANK PLATING SERVICE CORP
Classification: Large Quantity Generator

Date form received by agency: 08/14/1980
Site name: BURBANK PLATING SERV CORP
Classification: Large Quantity Generator

Hazardous Waste Summary:
Waste code: 171
Waste name: 171

Waste code: F006
Waste name: WASTEWATER TREATMENT SLUDGES FROM ELECTROPLATING OPERATIONS EXCEPT FROM THE FOLLOWING PROCESSES: (1) SULFURIC ACID ANODIZING OF ALUMINUM; (2) TIN PLATING ON CARBON STEEL; (3) ZINC PLATING (SEGREGATED BASIS) ON CARBON STEEL; (4) ALUMINUM OR ZINC-ALUMINUM PLATING ON CARBON STEEL; (5) CLEANING/STRIPPING ASSOCIATED WITH TIN, ZINC AND ALUMINUM PLATING ON CARBON STEEL; AND (6) CHEMICAL ETCHING AND MILLING OF ALUMINUM.

Waste code: F006
Waste name: WASTEWATER TREATMENT SLUDGES FROM ELECTROPLATING OPERATIONS EXCEPT FROM THE FOLLOWING PROCESSES: (1) SULFURIC ACID ANODIZING OF ALUMINUM; (2) TIN PLATING ON CARBON STEEL; (3) ZINC PLATING (SEGREGATED BASIS) ON CARBON STEEL; (4) ALUMINUM OR ZINC-ALUMINUM PLATING ON CARBON STEEL; (5) CLEANING/STRIPPING ASSOCIATED WITH TIN, ZINC AND ALUMINUM PLATING ON CARBON STEEL; AND (6) CHEMICAL ETCHING AND MILLING OF ALUMINUM.

Waste code: D002
Waste name: A WASTE WHICH HAS A PH OF LESS THAN 2 OR GREATER THAN 12.5 IS CONSIDERED TO BE A CORROSIVE HAZARDOUS WASTE. SODIUM HYDROXIDE, A CAUSTIC SOLUTION WITH A HIGH PH, IS OFTEN USED BY INDUSTRIES TO CLEAN OR DEGREASE PARTS. HYDROCHLORIC ACID, A SOLUTION WITH A LOW PH, IS USED BY MANY INDUSTRIES TO CLEAN METAL PARTS PRIOR TO PAINTING. WHEN THESE CAUSTIC OR ACID SOLUTIONS BECOME CONTAMINATED AND MUST BE DISPOSED, THE WASTE WOULD BE A CORROSIVE HAZARDOUS WASTE.

Waste code: D006
Waste name: CADMIUM

Waste code: D007
Waste name: CHROMIUM

Waste code: F006

BURBANK PLATING SERVICES CORPORATION (Continued) **1000161742**

Waste name: WASTEWATER TREATMENT SLUDGES FROM ELECTROPLATING OPERATIONS EXCEPT FROM THE FOLLOWING PROCESSES: (1) SULFURIC ACID ANODIZING OF ALUMINUM; (2) TIN PLATING ON CARBON STEEL; (3) ZINC PLATING (SEGREGATED BASIS) ON CARBON STEEL; (4) ALUMINUM OR ZINC-ALUMINUM PLATING ON CARBON STEEL; (5) CLEANING/STRIPPING ASSOCIATED WITH TIN, ZINC AND ALUMINUM PLATING ON CARBON STEEL; AND (6) CHEMICAL ETCHING AND MILLING OF ALUMINUM.

Waste code: F007
Waste name: SPENT CYANIDE PLATING BATH SOLUTIONS FROM ELECTROPLATING OPERATIONS

Waste code: F006
Waste name: WASTEWATER TREATMENT SLUDGES FROM ELECTROPLATING OPERATIONS EXCEPT FROM THE FOLLOWING PROCESSES: (1) SULFURIC ACID ANODIZING OF ALUMINUM; (2) TIN PLATING ON CARBON STEEL; (3) ZINC PLATING (SEGREGATED BASIS) ON CARBON STEEL; (4) ALUMINUM OR ZINC-ALUMINUM PLATING ON CARBON STEEL; (5) CLEANING/STRIPPING ASSOCIATED WITH TIN, ZINC AND ALUMINUM PLATING ON CARBON STEEL; AND (6) CHEMICAL ETCHING AND MILLING OF ALUMINUM.

Waste code: 171
Waste name: 171

Waste code: F006
Waste name: WASTEWATER TREATMENT SLUDGES FROM ELECTROPLATING OPERATIONS EXCEPT FROM THE FOLLOWING PROCESSES: (1) SULFURIC ACID ANODIZING OF ALUMINUM; (2) TIN PLATING ON CARBON STEEL; (3) ZINC PLATING (SEGREGATED BASIS) ON CARBON STEEL; (4) ALUMINUM OR ZINC-ALUMINUM PLATING ON CARBON STEEL; (5) CLEANING/STRIPPING ASSOCIATED WITH TIN, ZINC AND ALUMINUM PLATING ON CARBON STEEL; AND (6) CHEMICAL ETCHING AND MILLING OF ALUMINUM.

Facility Has Received Notices of Violations:

Regulation violated: Not reported
Area of violation: Generators - General
Date violation determined: 06/23/2004
Date achieved compliance: 07/23/2004
Violation lead agency: State
Enforcement action: WRITTEN INFORMAL
Enforcement action date: 06/23/2004
Enf. disposition status: Not reported
Enf. disp. status date: Not reported
Enforcement lead agency: State
Proposed penalty amount: Not reported
Final penalty amount: Not reported
Paid penalty amount: Not reported

Regulation violated: Not reported
Area of violation: Generators - Records/Reporting
Date violation determined: 06/23/2004
Date achieved compliance: 07/23/2004
Violation lead agency: State
Enforcement action: WRITTEN INFORMAL
Enforcement action date: 06/23/2004
Enf. disposition status: Not reported
Enf. disp. status date: Not reported
Enforcement lead agency: State

BURBANK PLATING SERVICES CORPORATION (Continued) **1000161742**

Proposed penalty amount: Not reported
Final penalty amount: Not reported
Paid penalty amount: Not reported

Regulation violated: Not reported
Area of violation: Generators - General
Date violation determined: 06/23/2004
Date achieved compliance: 10/26/2004
Violation lead agency: State
Enforcement action: WRITTEN INFORMAL
Enforcement action date: 06/23/2004
Enf. disposition status: Not reported
Enf. disp. status date: Not reported
Enforcement lead agency: State
Proposed penalty amount: Not reported
Final penalty amount: Not reported
Paid penalty amount: Not reported

Regulation violated: Not reported
Area of violation: TSD - Contingency Plan and Emergency Procedures
Date violation determined: 06/23/2004
Date achieved compliance: 10/26/2004
Violation lead agency: State
Enforcement action: WRITTEN INFORMAL
Enforcement action date: 06/23/2004
Enf. disposition status: Not reported
Enf. disp. status date: Not reported
Enforcement lead agency: State
Proposed penalty amount: Not reported
Final penalty amount: Not reported
Paid penalty amount: Not reported

Regulation violated: Not reported
Area of violation: Generators - Pre-transport
Date violation determined: 06/23/2004
Date achieved compliance: 07/23/2004
Violation lead agency: State
Enforcement action: WRITTEN INFORMAL
Enforcement action date: 06/23/2004
Enf. disposition status: Not reported
Enf. disp. status date: Not reported
Enforcement lead agency: State
Proposed penalty amount: Not reported
Final penalty amount: Not reported
Paid penalty amount: Not reported

Evaluation Action Summary:
Evaluation date: 06/23/2004
Evaluation: COMPLIANCE EVALUATION INSPECTION ON-SITE
Area of violation: Generators - Pre-transport
Date achieved compliance: 07/23/2004
Evaluation lead agency: State

Evaluation date: 06/23/2004
Evaluation: COMPLIANCE EVALUATION INSPECTION ON-SITE
Area of violation: Generators - General
Date achieved compliance: 10/26/2004

BURBANK PLATING SERVICES CORPORATION (Continued) **1000161742**

Evaluation lead agency: State

Evaluation date: 06/23/2004
Evaluation: COMPLIANCE EVALUATION INSPECTION ON-SITE
Area of violation: TSD - Contingency Plan and Emergency Procedures
Date achieved compliance: 10/26/2004
Evaluation lead agency: State

Evaluation date: 06/23/2004
Evaluation: COMPLIANCE EVALUATION INSPECTION ON-SITE
Area of violation: Generators - General
Date achieved compliance: 07/23/2004
Evaluation lead agency: State

Evaluation date: 06/23/2004
Evaluation: COMPLIANCE EVALUATION INSPECTION ON-SITE
Area of violation: Generators - Records/Reporting
Date achieved compliance: 07/23/2004
Evaluation lead agency: State

FINDS:

Registry ID: 110000476841

Environmental Interest/Information System

California Hazardous Waste Tracking System - Datamart (HWTS-DATAMART) provides California with information on hazardous waste shipments for generators, transporters, and treatment, storage, and disposal facilities.

US EPA TRIS (Toxics Release Inventory System) contains information from facilities on the amounts of over 300 listed toxic chemicals that these facilities release directly to air, water, land, or that are transported off-site.

RCRAInfo is a national information system that supports the Resource Conservation and Recovery Act (RCRA) program through the tracking of events and activities related to facilities that generate, transport, and treat, store, or dispose of hazardous waste. RCRAInfo allows RCRA program staff to track the notification, permit, compliance, and corrective action activities required under RCRA.

CERCLIS (Comprehensive Environmental Response, Compensation, and Liability Information System) is the Superfund database that is used to support management in all phases of the Superfund program. The system contains information on all aspects of hazardous waste sites, including an inventory of sites, planned and actual site activities, and financial information.

HAZARDOUS WASTE BIENNIAL REPORTER

NPDES:
Npdes Number: CAS000001
Facility Status: Active
Agency Id: 0
Region: 4

BURBANK PLATING SERVICES CORPORATION (Continued) **1000161742**

Regulatory Measure Id:	189224
Order No:	97-03-DWQ
Regulatory Measure Type:	Enrollee
Place Id:	Not reported
WDID:	4 19I003726
Program Type:	Industrial
Adoption Date Of Regulatory Measure:	Not reported
Effective Date Of Regulatory Measure:	04/06/1992
Expiration Date Of Regulatory Measure:	Not reported
Termination Date Of Regulatory Measure:	Not reported
Discharge Name:	Burbank Plating Ser Corp
Discharge Address:	13561 Desmond St
Discharge City:	Pacoima
Discharge State:	California
Discharge Zip:	91331

CA FID UST:

Facility ID:	19000721
Regulated By:	UTNKA
Regulated ID:	00017034
Cortese Code:	Not reported
SIC Code:	Not reported
Facility Phone:	2138751044
Mail To:	Not reported
Mailing Address:	13561 DESMOND ST
Mailing Address 2:	Not reported
Mailing City,St,Zip:	PACOIMA 913310000
Contact:	Not reported
Contact Phone:	Not reported
DUNs Number:	Not reported
NPDES Number:	Not reported
EPA ID:	Not reported
Comments:	Not reported
Status:	Active

SLIC:

Region:	STATE
Facility Status:	**Open - Inactive**
Status Date:	10/30/2014
Global Id:	SL603799028
Lead Agency:	LOS ANGELES RWQCB (REGION 4)
Lead Agency Case Number:	Not reported
Latitude:	34.275561
Longitude:	-118.428278
Case Type:	Cleanup Program Site
Case Worker:	GJH
Local Agency:	Not reported
RB Case Number:	111.0226
File Location:	Not reported
Potential Media Affected:	Aquifer used for drinking water supply
Potential Contaminants of Concern:	Not reported
Site History:	Not reported

Click here to access the California GeoTracker records for this facility:

BURBANK PLATING SERVICES CORPORATION (Continued) **1000161742**

HIST UST:

Region:	STATE
Facility ID:	00000017034
Facility Type:	Other
Other Type:	ELECTROPLATING
Contact Name:	Not reported
Telephone:	2138751044
Owner Name:	BURBANK PLATING SERVICE CORP.
Owner Address:	13561 DESMOND ST.
Owner City,St,Zip:	PACOIMA, CA 91331
Total Tanks:	0004

Tank Num:	001
Container Num:	1
Year Installed:	1979
Tank Capacity:	00000135
Tank Used for:	WASTE
Type of Fuel:	Not reported
Container Construction Thickness:	6
Leak Detection:	Visual

Tank Num:	002
Container Num:	2
Year Installed:	Not reported
Tank Capacity:	00000135
Tank Used for:	WASTE
Type of Fuel:	Not reported
Container Construction Thickness:	6
Leak Detection:	Visual

Tank Num:	003
Container Num:	3
Year Installed:	Not reported
Tank Capacity:	00000135
Tank Used for:	WASTE
Type of Fuel:	Not reported
Container Construction Thickness:	6
Leak Detection:	Visual

Tank Num:	004
Container Num:	4
Year Installed:	1979
Tank Capacity:	00000135
Tank Used for:	WASTE
Type of Fuel:	Not reported
Container Construction Thickness:	6
Leak Detection:	Visual

SWEEPS UST:

Status:	Active
Comp Number:	1077
Number:	9
Board Of Equalization:	Not reported
Referral Date:	03-25-93
Action Date:	03-16-94
Created Date:	02-29-88

BURBANK PLATING SERVICES CORPORATION (Continued) **1000161742**

Owner Tank Id:	Not reported
SWRCB Tank Id:	19-050-001077-000001
Tank Status:	A
Capacity:	135
Active Date:	04-20-88
Tank Use:	CHEMICAL
STG:	P
Content:	UNKNOWN
Number Of Tanks:	4

Status:	Active
Comp Number:	1077
Number:	9
Board Of Equalization:	Not reported
Referral Date:	03-25-93
Action Date:	03-16-94
Created Date:	02-29-88
Owner Tank Id:	Not reported
SWRCB Tank Id:	19-050-001077-000002
Tank Status:	A
Capacity:	135
Active Date:	04-20-88
Tank Use:	CHEMICAL
STG:	P
Content:	UNKNOWN
Number Of Tanks:	Not reported

Status:	Active
Comp Number:	1077
Number:	9
Board Of Equalization:	Not reported
Referral Date:	03-25-93
Action Date:	03-16-94
Created Date:	02-29-88
Owner Tank Id:	Not reported
SWRCB Tank Id:	19-050-001077-000003
Tank Status:	A
Capacity:	135
Active Date:	04-20-88
Tank Use:	CHEMICAL
STG:	P
Content:	UNKNOWN
Number Of Tanks:	Not reported

Status:	Active
Comp Number:	1077
Number:	9
Board Of Equalization:	Not reported
Referral Date:	03-25-93
Action Date:	03-16-94
Created Date:	02-29-88
Owner Tank Id:	Not reported
SWRCB Tank Id:	19-050-001077-000004
Tank Status:	A
Capacity:	135
Active Date:	04-20-88
Tank Use:	CHEMICAL

BURBANK PLATING SERVICES CORPORATION (Continued) **1000161742**

STG: P
Content: UNKNOWN
Number Of Tanks: Not reported

WIP:
Region: 4
File Number: 111.0226
File Status: Backlog
Staff: UNIDENTIFIED
Facility Suite: Not reported

ENF:

Region:	4
Facility Id:	212128
Agency Name:	Burbank Plating Service Corporation
Place Type:	Manufacturing
Place Subtype:	Manufacturing NEC
Facility Type:	All other facilities
Agency Type:	Privately-Owned Business
# Of Agencies:	1
Place Latitude:	34.275292
Place Longitude:	-118.427738
SIC Code 1:	3471
SIC Desc 1:	Electroplating, Plating, Polishing, Anodizing, and Coloring
SIC Code 2:	Not reported
SIC Desc 2:	Not reported
SIC Code 3:	Not reported
SIC Desc 3:	Not reported
NAICS Code 1:	Not reported
NAICS Desc 1:	Not reported
NAICS Code 2:	Not reported
NAICS Desc 2:	Not reported
NAICS Code 3:	Not reported
NAICS Desc 3:	Not reported
# Of Places:	1
Source Of Facility:	Reg Meas
Design Flow:	Not reported
Threat To Water Quality:	Not reported
Complexity:	Not reported
Pretreatment:	Not reported
Facility Waste Type:	Not reported
Facility Waste Type 2:	Not reported
Facility Waste Type 3:	Not reported
Facility Waste Type 4:	Not reported
Program:	WIP
Program Category1:	MONITORING
Program Category2:	MONITORING
# Of Programs:	1
WDID:	4WIP1110226
Reg Measure Id:	166509
Reg Measure Type:	Unregulated
Region:	4
Order #:	Not reported
Npdes# CA#:	Not reported
Major-Minor:	Not reported
Npdes Type:	Not reported

BURBANK PLATING SERVICES CORPORATION (Continued) **1000161742**

Reclamation:	Not reported
Dredge Fill Fee:	Not reported
301H:	Not reported
Application Fee Amt Received:	Not reported
Status:	Never Active
Status Date:	02/20/2013
Effective Date:	Not reported
Expiration/Review Date:	Not reported
Termination Date:	Not reported
WDR Review - Amend:	Not reported
WDR Review - Revise/Renew:	Not reported
WDR Review - Rescind:	Not reported
WDR Review - No Action Required:	Not reported
WDR Review - Pending:	Not reported
WDR Review - Planned:	Not reported
Status Enrollee:	N
Individual/General:	I
Fee Code:	Not reported
Direction/Voice:	Passive
Enforcement Id(EID):	226412
Region:	4
Order / Resolution Number:	13267 Letter
Enforcement Action Type:	13267 Letter
Effective Date:	11/09/2000
Adoption/Issuance Date:	Not reported
Achieve Date:	Not reported
Termination Date:	11/09/2000
ACL Issuance Date:	Not reported
EPL Issuance Date:	Not reported
Status:	Historical
Title:	Enforcement - 4WIP1110226
Description:	Not reported
Program:	WIP
Latest Milestone Completion Date:	Not reported
# Of Programs1:	1
Total Assessment Amount:	$0.00
Initial Assessed Amount:	$0.00
Liability $ Amount:	$0.00
Project $ Amount:	$0.00
Liability $ Paid:	$0.00
Project $ Completed:	$0.00
Total $ Paid/Completed Amount:	$0.00

ENVIROSTOR:

Facility ID:	60000607
Status:	Inactive - Action Required
Status Date:	06/30/2007
Site Code:	Not reported
Site Type:	Evaluation
Site Type Detailed:	Evaluation
Acres:	0.81
NPL:	NO
Regulatory Agencies:	SMBRP, US EPA
Lead Agency:	SMBRP
Program Manager:	Chand Sultana
Supervisor:	Rita Kamat
Division Branch:	Cleanup Chatsworth

BURBANK PLATING SERVICES CORPORATION (Continued) **1000161742**

Assembly: 39
Senate: 20
Special Program: EPA - PASI
Restricted Use: NO
Site Mgmt Req: NONE SPECIFIED
Funding: EPA Grant
Latitude: 34.27556
Longitude: -118.4282
APN: 2523004037
Past Use: METAL PLATING - CHROME, METAL PLATING - OTHER
Potential COC: Cadmium and compounds Chromium VI Cyanide (hydrogen Zinc
Confirmed COC: Cadmium and compounds Chromium VI Cyanide (hydrogen Zinc
Potential Description: SOIL
Alias Name: 2523004037
Alias Type: APN
Alias Name: 60000607
Alias Type: Envirostor ID Number

Completed Info:
Completed Area Name: PROJECT WIDE
Completed Sub Area Name: Not reported
Completed Document Type: Site Screening
Completed Date: 06/21/2007
Comments: Not reported

Future Area Name: Not reported
Future Sub Area Name: Not reported
Future Document Type: Not reported
Future Due Date: Not reported
Schedule Area Name: Not reported
Schedule Sub Area Name: Not reported
Schedule Document Type: Not reported
Schedule Due Date: Not reported
Schedule Revised Date: Not reported

Facility ID: 71002305
Status: Refer: Other Agency
Status Date: Not reported
Site Code: Not reported
Site Type: Tiered Permit
Site Type Detailed: Tiered Permit
Acres: Not reported
NPL: NO
Regulatory Agencies: NONE SPECIFIED
Lead Agency: NONE SPECIFIED
Program Manager: Not reported
Supervisor: Not reported
Division Branch: Cleanup Chatsworth
Assembly: 39
Senate: 20
Special Program: Not reported
Restricted Use: NO
Site Mgmt Req: NONE SPECIFIED
Funding: Not reported
Latitude: 34.2625
Longitude: -118.4261
APN: NONE SPECIFIED
Past Use: NONE SPECIFIED

BURBANK PLATING SERVICES CORPORATION (Continued) **1000161742**

Potential COC: NONE SPECIFIED
Confirmed COC: NONE SPECIFIED
Potential Description: NONE SPECIFIED
Alias Name: CAD009603184
Alias Type: EPA Identification Number
Alias Name: 110000476841
Alias Type: EPA (FRS #)
Alias Name: 71002305
Alias Type: Envirostor ID Number

Completed Info:
Completed Area Name: Not reported
Completed Sub Area Name: Not reported
Completed Document Type: Not reported
Completed Date: Not reported
Comments: Not reported

Future Area Name: Not reported
Future Sub Area Name: Not reported
Future Document Type: Not reported
Future Due Date: Not reported
Schedule Area Name: Not reported
Schedule Sub Area Name: Not reported
Schedule Document Type: Not reported
Schedule Due Date: Not reported
Schedule Revised Date: Not reported

CA WDS:
Facility ID: 4 19I003726
Facility Type: Other - Does not fall into the category of Municipal/Domestic, Industrial, Agricultural or Solid Waste (Class I, II or III)
Facility Status: Active - Any facility with a continuous or seasonal discharge that is under Waste Discharge Requirements.
NPDES Number: CAS000001 The 1st 2 characters designate the state. The remaining 7 are assigned by the Regional Board
Subregion: 4
Facility Telephone: 8188991157
Facility Contact: Robert Scheer
Agency Name: BURBANK PLATING SER. CORP.
Agency Address: Not reported
Agency City,St,Zip: 0
Agency Contact: Not reported
Agency Telephone: Not reported
Agency Type: Private
SIC Code: 3471
SIC Code 2: Not reported
Primary Waste Type: Nonhazardous Solid Wastes/Influent or Solid Wastes that contain nonhazardous putrescible and non putrescible solid, semisolid, and liquid wastes (E.G., garbage, trash, refuse, paper, demolition and construction wastes, manure, vegetable or animal solid and semisolid waste).
Primary Waste: STORMS
Waste Type2: Not reported
Waste2: Stormwater Runoff
Primary Waste Type: Nonhazardous Solid Wastes/Influent or Solid Wastes that contain nonhazardous putrescible and non putrescible solid, semisolid, and liquid wastes (E.G., garbage, trash, refuse, paper, demolition and

BURBANK PLATING SERVICES CORPORATION (Continued) **1000161742**

construction wastes, manure, vegetable or animal solid and semisolid waste).

Secondary Waste: Not reported
Secondary Waste Type: Not reported
Design Flow: 0
Baseline Flow: 0
Reclamation: No reclamation requirements associated with this facility.
POTW: The facility is not a POTW.
Treat To Water: Minor Threat to Water Quality. A violation of a regional board order should cause a relatively minor impairment of beneficial uses compared to a major or minor threat. Not: All nurds without a TTWQ will be considered a minor threat to water quality unless coded at a higher Level. A Zero (0) may be used to code those NURDS that are found to represent no threat to water quality.
Complexity: Category C - Facilities having no waste treatment systems, such as cooling water dischargers or thosewho must comply through best management practices, facilities with passive waste treatment and disposal systems, such as septic systems with subsurface disposal, or dischargers having waste storage systems with land disposal such as dairy waste ponds.

J70 **HOLCHEM INCORPORATED** **HIST Cal-Sites** **1000170315**
NE **13546 DESMOND ST** **Cortese** **N/A**
1/2-1 **PACOIMA, CA 91331** **HIST CORTESE**
0.996 mi. **LUST**
5258 ft. **Site 2 of 2 in cluster J** **SLIC**
LA Co. Site Mitigation
Relative: **WIP**
Higher **RESPONSE**
EMI
Actual: **ENVIROSTOR**
1054 ft.

Calsite:
Region: GLENDALE
Facility ID: 19281213
Facility Type: RP
Type: RESPONSIBLE PARTY
Branch: SA
Branch Name: SO CAL - GLENDALE
File Name: Not reported
State Senate District: 05131997
Status: ANNUAL WORKPLAN (AWP) - ACTIVE SITE
Status Name: ANNUAL WORKPLAN - ACTIVE SITE
Lead Agency: DEPT OF TOXIC SUBSTANCES CONTROL
NPL: Not Listed
SIC Code: 28
SIC Name: MANU - CHEMICALS & ALLIED PRODUCTS
Access: Not reported
Cortese: Not reported
Hazardous Ranking Score: Not reported
Date Site Hazard Ranked: Not reported
Groundwater Contamination: Not reported
Staff Member Responsible for Site: GFARKAS
Supervisor Responsible for Site: Not reported
Region Water Control Board: LA
Region Water Control Board Name: LOS ANGELES
Lat/Long Direction: Not reported
Lat/Long (dms): 0 0 0 / 0 0 0

HOLCHEM INCORPORATED (Continued) **1000170315**

Lat/long Method:	Not reported
Lat/Long Description:	Not reported
State Assembly District Code:	39
State Senate District Code:	20
Facility ID:	19281213
Activity:	ORDER
Activity Name:	I/SE, IORSE, FFA, FFSRA, VCA, EA
AWP Code:	IS/E
Proposed Budget:	0
AWP Completion Date:	Not reported
Revised Due Date:	Not reported
Comments Date:	05081997
Est Person-Yrs to complete:	0
Estimated Size:	Not reported
Request to Delete Activity:	Not reported
Activity Status:	AWP
Definition of Status:	ANNUAL WORKPLAN - ACTIVE SITE
Liquids Removed (Gals):	0
Liquids Treated (Gals):	0
Action Included Capping:	Not reported
Well Decommissioned:	Not reported
Action Included Fencing:	Not reported
Removal Action Certification:	Not reported
Activity Comments:	Not reported
For Commercial Reuse:	0
For Industrial Reuse:	0
For Residential Reuse:	0
Unknown Type:	0
Facility ID:	19281213
Activity:	RIFS
Activity Name:	REMEDIAL INVESTIGATION / FEASIBILITY STUDY
AWP Code:	Not reported
Proposed Budget:	0
AWP Completion Date:	12312004
Revised Due Date:	Not reported
Comments Date:	Not reported
Est Person-Yrs to complete:	0
Estimated Size:	Not reported
Request to Delete Activity:	Not reported
Activity Status:	AWP
Definition of Status:	ANNUAL WORKPLAN - ACTIVE SITE
Liquids Removed (Gals):	0
Liquids Treated (Gals):	0
Action Included Capping:	Not reported
Well Decommissioned:	Not reported
Action Included Fencing:	Not reported
Removal Action Certification:	Not reported
Activity Comments:	Not reported
For Commercial Reuse:	0
For Industrial Reuse:	0
For Residential Reuse:	0
Unknown Type:	0
Facility ID:	19281213
Activity:	RAP
Activity Name:	REMEDIAL ACTION PLAN / RECORD OF DECISION
AWP Code:	Not reported
Proposed Budget:	0

HOLCHEM INCORPORATED (Continued) **1000170315**

AWP Completion Date:	06302005
Revised Due Date:	Not reported
Comments Date:	Not reported
Est Person-Yrs to complete:	0
Estimated Size:	Not reported
Request to Delete Activity:	Not reported
Activity Status:	AWP
Definition of Status:	ANNUAL WORKPLAN - ACTIVE SITE
Liquids Removed (Gals):	0
Liquids Treated (Gals):	0
Action Included Capping:	Not reported
Well Decommissioned:	Not reported
Action Included Fencing:	Not reported
Removal Action Certification:	Not reported
Activity Comments:	Not reported
For Commercial Reuse:	0
For Industrial Reuse:	0
For Residential Reuse:	0
Unknown Type:	0
Facility ID:	19281213
Activity:	RA
Activity Name:	REMOVAL ACTION
AWP Code:	Not reported
Proposed Budget:	0
AWP Completion Date:	Not reported
Revised Due Date:	Not reported
Comments Date:	10161997
Est Person-Yrs to complete:	0
Estimated Size:	S
Request to Delete Activity:	Not reported
Activity Status:	AWP
Definition of Status:	ANNUAL WORKPLAN - ACTIVE SITE
Liquids Removed (Gals):	0
Liquids Treated (Gals):	0
Action Included Capping:	Not reported
Well Decommissioned:	Not reported
Action Included Fencing:	X
Removal Action Certification:	N
Activity Comments:	Not reported
For Commercial Reuse:	0
For Industrial Reuse:	0
For Residential Reuse:	0
Unknown Type:	0
Facility ID:	19281213
Activity:	ORDER
Activity Name:	I/SE, IORSE, FFA, FFSRA, VCA, EA
AWP Code:	AGRMT
Proposed Budget:	0
AWP Completion Date:	Not reported
Revised Due Date:	Not reported
Comments Date:	04262000
Est Person-Yrs to complete:	0
Estimated Size:	Not reported
Request to Delete Activity:	Not reported
Activity Status:	AWP
Definition of Status:	ANNUAL WORKPLAN - ACTIVE SITE
Liquids Removed (Gals):	0

HOLCHEM INCORPORATED (Continued) **1000170315**

Liquids Treated (Gals):	0
Action Included Capping:	Not reported
Well Decommissioned:	Not reported
Action Included Fencing:	Not reported
Removal Action Certification:	Not reported
Activity Comments:	Not reported
For Commercial Reuse:	0
For Industrial Reuse:	0
For Residential Reuse:	0
Unknown Type:	0
Facility ID:	19281213
Activity:	RAW
Activity Name:	REMOVAL ACTION WORKPLAN
AWP Code:	Not reported
Proposed Budget:	0
AWP Completion Date:	Not reported
Revised Due Date:	Not reported
Comments Date:	01162001
Est Person-Yrs to complete:	0
Estimated Size:	Not reported
Request to Delete Activity:	Not reported
Activity Status:	AWP
Definition of Status:	ANNUAL WORKPLAN - ACTIVE SITE
Liquids Removed (Gals):	0
Liquids Treated (Gals):	0
Action Included Capping:	Not reported
Well Decommissioned:	Not reported
Action Included Fencing:	Not reported
Removal Action Certification:	Not reported
Activity Comments:	Not reported
For Commercial Reuse:	0
For Industrial Reuse:	0
For Residential Reuse:	0
Unknown Type:	0
Facility ID:	19281213
Activity:	CEQA
Activity Name:	CEQA INCLUDING NEGATIVE DECS
AWP Code:	Not reported
Proposed Budget:	0
AWP Completion Date:	Not reported
Revised Due Date:	Not reported
Comments Date:	02102000
Est Person-Yrs to complete:	0
Estimated Size:	Not reported
Request to Delete Activity:	Not reported
Activity Status:	AWP
Definition of Status:	ANNUAL WORKPLAN - ACTIVE SITE
Liquids Removed (Gals):	0
Liquids Treated (Gals):	0
Action Included Capping:	Not reported
Well Decommissioned:	Not reported
Action Included Fencing:	Not reported
Removal Action Certification:	Not reported
Activity Comments:	Not reported
For Commercial Reuse:	0
For Industrial Reuse:	0
For Residential Reuse:	0

HOLCHEM INCORPORATED (Continued) **1000170315**

Unknown Type:	0
Facility ID:	19281213
Activity:	CEQA
Activity Name:	CEQA INCLUDING NEGATIVE DECS
AWP Code:	Not reported
Proposed Budget:	0
AWP Completion Date:	Not reported
Revised Due Date:	Not reported
Comments Date:	01162001
Est Person-Yrs to complete:	0
Estimated Size:	Not reported
Request to Delete Activity:	Not reported
Activity Status:	AWP
Definition of Status:	ANNUAL WORKPLAN - ACTIVE SITE
Liquids Removed (Gals):	0
Liquids Treated (Gals):	0
Action Included Capping:	Not reported
Well Decommissioned:	Not reported
Action Included Fencing:	Not reported
Removal Action Certification:	Not reported
Activity Comments:	Not reported
For Commercial Reuse:	0
For Industrial Reuse:	0
For Residential Reuse:	0
Unknown Type:	0
Alternate Address:	13546 DESMOND STREET
Alternate City,St,Zip:	PACOIMA, CA 91331
Background Info:	Prior to July 1, 1987 the Site was operated by Chase Chemical under the ownership of Herman Benjamin. As of that date the Site was operated by Holchem, Inc under a lease from Herman Benjamin. The Site operates as a chemical distributer. The facility property occupies about 2 acres in an industrial/ residential area. There are 2 buildings, one for offices and packaging and the other for warehousing hazardous substances. The facility uses 23 AGSTs, 19 UGSTs, 1 clarifier for a drum rinse area, 2 sumps for rainwater runoff, and a 55 gal drum storage area able to contain 300 drums. The property is completely paved and fenced.
	Not reported
	The site was originally overseen by the RWQCB. Semi-annual GW monitoring had been conducted since Sept 92. RWQCB had no funds to work on the site, it was then referred to DTSC under the USEPA PA/SI program. DTSC then determined that an I&SE Order be issued to expedite the evaluation, containment and cleanup of the site. The site is of special concern because a few miles downgradient exist 2 of LADWP's main drinking water wellfields.
Comments Date:	01032002
Comments:	Off-site drilling (3 wells) was completed. The three wells
Comments Date:	01032002
Comments:	were installed and sampled.
Comments Date:	01072002
Comments:	RI field work has been completed.
Comments Date:	01151997
Comments:	DTSC determined that an IS&E Consent Order be drafted. If the RPs
Comments Date:	01151997
Comments:	decide not to sign it, then a unilateral Order will be issued.
Comments Date:	01162001

HOLCHEM INCORPORATED (Continued) **1000170315**

Comments: CEQA Negative Declaration for RAW was approved.
Comments Date: 01162001
Comments: Not reported
Comments Date: 01162001
Comments: RAW was approved.
Comments Date: 01302003
Comments: Brenntag submitted a Draft Risk Assessment Plan.
Comments Date: 02032005
Comments: Aquifer Testing and Data Analysis Work Plan was submitted to
Comments Date: 02032005
Comments: DTSC.
Comments Date: 02052004
Comments: Fourth Quarter Groundwater Monitoring Report was submitted
Comments Date: 02052004
Comments: to DTSC.
Comments Date: 02142005
Comments: Fourth Quarter 2004 Groundwater Monitoring and SVE System Update
Comments Date: 02142005
Comments: Report was submitted.
Comments Date: 02182000
Comments: Notice of Exemption for Remedial Action Work (RAW) Soil Vapor
Comments Date: 02182000
Comments: Extraction (SVE) and Biosparge Pilot Test was approved.
Comments Date: 02182005
Comments: Draft Off-Site Soil-Gas Workplan was submitted.
Comments Date: 02192005
Comments: Off-Site Soil Gas Workplan was approved.
Comments Date: 02282005
Comments: Draft CEQA Initial Study was submitted. Revised Risk
Comments Date: 02282005
Comments: Assessment was submitted.
Comments Date: 03052002
Comments: Brenntag submitted a request for Partial Site Closure for
Comments Date: 03052002
Comments: property divestment purposes.
Comments Date: 03062003
Comments: DTSC provided comments on the Additional Off-site Groundwater
Comments Date: 03062003
Comments: Investigation Plan.
Comments Date: 03101999
Comments: Attorney General is negotiating a Consent Decree with Holchem.
Comments Date: 03101999
Comments: Not reported
Comments Date: 03171998
Comments: Settlement meeting with Holchem, Inc.
Comments Date: 03171998
Comments: Not reported
Comments Date: 03192002
Comments: Brenntag submitted the Fourth Quarter 2001 Groundwater
Comments Date: 03192002
Comments: Monitoring Report.
Comments Date: 03202003
Comments: Brenntag submitted an Additional off-site Groundwater
Comments Date: 03202003
Comments: Investigation Plan to DTSC.
Comments Date: 03242000
Comments: Pilot Study was completed

HOLCHEM INCORPORATED (Continued) **1000170315**

Comments Date: 03302004
Comments: Letter with administrative changes from Brenntag.
Comments Date: 04022003
Comments: DTSC provided comments on the Additional Off-site Groundwater
Comments Date: 04022003
Comments: Investigation Plan.
Comments Date: 04031997
Comments: A draft Consent Order was sent to the RPs. A deadline date for
Comments Date: 04031997
Comments: an agreement was 4/17/97.
Comments Date: 04072004
Comments: DTSC approves the RI Report.
Comments Date: 04102003
Comments: DTSC provided comments on the RI Report.
Comments Date: 04171997
Comments: A unilateral I&SE Order was issued to Holchem.
Comments Date: 04251996
Comments: DTSC under contract with USEPA is conducting a PA on the
Comments Date: 04251996
Comments: site. This Site was under RWQCB, now it is USEPA-lead. LADWP is
Comments Date: 04251996
Comments: also lending support. A meeting at RWQCB last month was held to
Comments Date: 04251996
Comments: introduce current site information and other agency contacts.
Comments Date: 05022002
Comments: First Quarter 2002 Groundwater Monitoring Report was submitted
Comments Date: 05022002
Comments: to DTSC.
Comments Date: 05042004
Comments: First Quarter Groundwater Monitoring Report was submitted to
Comments Date: 05042004
Comments: DTSC.
Comments Date: 05062004
Comments: Revised Draft Risk Assessment was submitted to DTSC.
Comments Date: 05081997
Comments: A unilateral I&SE Order was issued to Herman Benjamin per his
Comments Date: 05081997
Comments: request.
Comments Date: 05082001
Comments: RI/FS Workplan was approved.
Comments Date: 05092003
Comments: First Quarter Groundwater Monitoring Report was submitted to
Comments Date: 05092003
Comments: DTSC.
Comments Date: 05112004
Comments: Updated Pacoima Schedule was submitted.
Comments Date: 05211997
Comments: letter sent to Holchem. Holchem has not notified DTSC as to
Comments Date: 05211997
Comments: who their Project Coordinator is. Holchem filed a petition
Comments Date: 05211997
Comments: for Writ of Mandate, Preliminary, and Permanent Injunctions,
Comments Date: 05211997
Comments: with the Los Angeles Superior Court.
Comments Date: 05211997
Comments: Notice of Proposed Determination of Non-Compliance with Order
Comments Date: 06022004

HOLCHEM INCORPORATED (Continued) **1000170315**

Comments: DTSC comments on the Draft Risk Assessment.
Comments Date: 06042002
Comments: DTSC's comments were sent to consultant.
Comments Date: 06102003
Comments: Brenntag submitted the 2003 Groundwater Monitoring Plan.
Comments Date: 06201997
Comments: Benjamin submits Draft RI/FS Workplan.
Comments Date: 06211999
Comments: Attorney General and DTSC staff participated at a settlement
Comments Date: 06211999
Comments: hearing at L.A. County Court.
Comments Date: 06211999
Comments: Not reported
Comments Date: 06211999
Comments: Not reported
Comments Date: 06241997
Comments: Notice of Additional Opportunity to present defenses to I&SE
Comments Date: 06241997
Comments: Order letter sent to Holchem. Holchem may submit defense by
Comments Date: 06241997
Comments: July 25th, then DTSC will make a determination by August 25th.
Comments Date: 06241997
Comments: Not reported
Comments Date: 06262000
Comments: Draft RI/FS Workplan was submitted.
Comments Date: 06302001
Comments: Holchem facility was closed.
Comments Date: 07071998
Comments: The Preliminary Assessment for the Holchem Inc. site has been
Comments Date: 07071998
Comments: approved by USEPA. The site scored greater than 28.5 for
Comments Date: 07071998
Comments: Hazard Ranking purposes.
Comments Date: 07232004
Comments: DTSC comments on the First Quarter 2004 Groundwater Monitoring
Comments Date: 07232004
Comments: Report and SVE Treatment System Update.
Comments Date: 07312001
Comments: Holchem site was sold to Brenntag West. Inc.
Comments Date: 08112003
Comments: Second Quarter Groundwater Monitoring Report was submitted to
Comments Date: 08112003
Comments: DTSC.
Comments Date: 08122003
Comments: DTSC provided additional comments to the draft RI Report.
Comments Date: 08152001
Comments: RI/FS fieldwork started.
Comments Date: 08202004
Comments: DTSC comments on the Second Quarter Groundwater Monitoring
Comments Date: 08202004
Comments: Report and SVE Treatment System Update.
Comments Date: 08211998
Comments: A Preliminary Notice of Non-Compliance letter was issued to
Comments Date: 08211998
Comments: Mr. Benjamin for not submitted an adequate RI/FS Workplan.
Comments Date: 08211998
Comments: Not reported

HOLCHEM INCORPORATED (Continued) **1000170315**

Comments Date: 08251999
Comments: Mr. Benjamin & Company have agreed to join the settlement
Comments Date: 08251999
Comments: Holchem agreed to do a RAW (SVE).
Comments Date: 08252004
Comments: DTSC comments on the Draft Risk Assessment.
Comments Date: 08281997
Comments: Scoping meeting with Herman Benjamin to discuss the Public
Comments Date: 08281997
Comments: Participation Plan.
Comments Date: 08291997
Comments: RI/FS Workplan returned to Benjamin with DTSC comments.
Comments Date: 08291997
Comments: Not reported
Comments Date: 08311999
Comments: Draft Remedial Action Workplan was submitted.
Comments Date: 08311999
Comments: Not reported
Comments Date: 08312004
Comments: DTSC giants conditional approval of the draft Risk Assessment.
Comments Date: 09031997
Comments: Settlement meeting with Holchem Inc. more discussions needed.
Comments Date: 09031997
Comments: Not reported
Comments Date: 10011998
Comments: Met with Benjamin, he has a new Consultant Environmental
Comments Date: 10011998
Comments: Strategies Corp. that is replacing California Environmental.
Comments Date: 10011998
Comments: Mr. Angelo Bellomo is the new Project Coordinator.
Comments Date: 10011998
Comments: Not reported
Comments Date: 10161997
Comments: Fence and post site.
Comments Date: 10232000
Comments: Fact Sheet #1 was approved.
Comments Date: 10261998
Comments: Settlement meeting with Holchem. UST Removal/Replacement
Comments Date: 10261998
Comments: Workplan submitted. Los Angeles City Fire Department will
Comments Date: 10261998
Comments: be the Lead Agency for the UST removal operations.
Comments Date: 10282004
Comments: Draft Feasibility Study was submitted.
Comments Date: 11102004
Comments: Third Quarter 2004 Monitoring Report was submitted.
Comments Date: 11112003
Comments: Third Quarter Groundwater Monitoring Report was submitted to
Comments Date: 11112003
Comments: DTSC.
Comments Date: 11121998
Comments: UST Workplan comments sent to all parties involved.
Comments Date: 11121998
Comments: Not reported
Comments Date: 11132003
Comments: Additional DTSC comments to RI Report.
Comments Date: 11162004

HOLCHEM INCORPORATED (Continued) **1000170315**

Comments:	DTSC comments on draft Feasibility Study.
Comments Date:	11181997
Comments:	Settlement meeting with Holchem and Benjamin.
Comments Date:	11181997
Comments:	Not reported
Comments Date:	11191999
Comments:	Consent Decree was signed BY DTSC.
Comments Date:	11192004
Comments:	DTSC comments on draft Feasibility Study.
Comments Date:	11241999
Comments:	Consent Judgement was filed.
Comments Date:	11241999
Comments:	Not reported
Comments Date:	12011996
Comments:	USEPA and DTSC has determined that the site should no longer be
Comments Date:	12011996
Comments:	in the PA/SI Program and that it should be a DTSC-Lead site.
Comments Date:	12011996
Comments:	DTSC is pursuing the RP's to join the Voluntary Cleanup Program.
Comments Date:	12021998
Comments:	Excavation of new UST location in process.
Comments Date:	12021998
Comments:	Not reported
Comments Date:	12022004
Comments:	DTSC approved the Feasibiltiy Study.
Comments Date:	12032001
Comments:	Offsite drilling (3 wells) started.
Comments Date:	12042003
Comments:	DTSC provided comments on the Third Quarter Groundwater
Comments Date:	12042003
Comments:	Monitoring Report.
Comments Date:	12102004
Comments:	The Final Feasibility was submitted.
Comments Date:	12111998
Comments:	Soils tested positive for PCE contamination in new UST excava-
Comments Date:	12111998
Comments:	tion.
Comments Date:	12122003
Comments:	Brenntag responded to DTSC comment dated 11/13/2003.
Comments Date:	12141998
Comments:	A previously unknown gasoline UST was removed. Soils tested
Comments Date:	12141998
Comments:	negative for contaminants.
Comments Date:	12171999
Comments:	Consent Decree was sent for 30-day public comment.
Comments Date:	12281998
Comments:	Excavation of 19 USTs starts.
Comments Date:	12291999
Comments:	Draft NOE for the RAW Pilot Test was sent to OPEA Sacramento.
Comments Date:	12311998
Comments:	19 UST's removed.
Comments Date:	12311998
Comments:	Not reported
Comments Date:	12312003
Comments:	DTSC reviewed Brenntag responses.
ID Name:	EPA IDENTIFICATION NUMBER
ID Value:	CAD028860955

HOLCHEM INCORPORATED (Continued) **1000170315**

ID Name: CALSTARS CODE
ID Value: 300593
Alternate Name: HOLCHEM, INC.CHASE CHEMICAL CO
Special Programs Code: Not reported
Special Programs Name: Not reported

CORTESE:
Region: CORTESE
Envirostor Id: 19281213
Site/Facility Type: STATE RESPONSE
Cleanup Status: ACTIVE
Status Date: 05/13/1997
Site Code: 300593
Latitude: 34.274961
Longitude: -118.42717
Owner: Not reported
Enf Type: Not reported
Swat R: Not reported
Flag: envirostor
Order No: Not reported
Waste Discharge System No: Not reported
Effective Date: Not reported
Region 2: Not reported
WID Id: Not reported
Solid Waste Id No: Not reported
Waste Management Uit Name: Not reported

HIST CORTESE:
Region: CORTESE
Facility County Code: 19
Reg By: LTNKA
Reg Id: 913310525

LUST REG 4:
Region: 4
Regional Board: 04
County: Los Angeles
Facility Id: 913310525
Status: Preliminary site assessment underway
Substance: Solvents
Substance Quantity: Not reported
Local Case No: Not reported
Case Type: Groundwater
Abatement Method Used at the Site: Remove Free Product
Global ID: T0603702196
W Global ID: Not reported
Staff: TOX
Local Agency: 19050
Cross Street: Not reported
Enforcement Type: Not reported
Date Leak Discovered: Not reported
Date Leak First Reported: 11/18/1983
Date Leak Record Entered: 12/31/1986
Date Confirmation Began: Not reported
Date Leak Stopped: 10/15/1984
Date Case Last Changed on Database: 7/21/1999

HOLCHEM INCORPORATED (Continued) **1000170315**

Date the Case was Closed:		Not reported
How Leak Discovered:	Not reported	
How Leak Stopped:	Not reported	
Cause of Leak:	UNK	
Leak Source:	UNK	
Operator:	BENJAMIN, HERMANN	
Water System:	Not reported	
Well Name:	Not reported	
Approx. Dist To Production Well (ft):		9019.7385363111346922730950 07
Source of Cleanup Funding:		UNK
Preliminary Site Assessment Workplan Submitted:		Not reported
Preliminary Site Assessment Began:		1/4/1990
Pollution Characterization Began:		Not reported
Remediation Plan Submitted:		Not reported
Remedial Action Underway:		Not reported
Post Remedial Action Monitoring Began:		Not reported
Enforcement Action Date:		Not reported
Historical Max MTBE Date:		Not reported
Hist Max MTBE Conc in Groundwater:		Not reported
Hist Max MTBE Conc in Soil:		Not reported
Significant Interim Remedial Action Taken:		Yes
GW Qualifier:	Not reported	
Soil Qualifier:	Not reported	
Organization:	Not reported	
Owner Contact:	Not reported	
Responsible Party:	CHASE CHEMICAL CO.	
RP Address:	13546 DESMOND ST, PACOIMA, CA 91331	
Program:	SLIC	
Lat/Long:	34.2758659 / -1	
Local Agency Staff:	PEJ	
Beneficial Use:	Not reported	
Priority:	Not reported	
Cleanup Fund Id:	Not reported	
Suspended:	Not reported	
Assigned Name:	Not reported	
Summary:	CASE INITIATED BY RWQCB IN 1983. HYDROCARBONS WERE FOUND IN SOIL. SOURCE WAS NOT IDENTIFIABLE AS SUBSTANCE STORED ONSITEDNAPLS PRESENT IN ONE WELL. 01/08/99 4TH QTR MON RPT 1998	

SLIC:

Region:	STATE
Facility Status:	**Open - Site Assessment**
Status Date:	08/20/1995
Global Id:	SL603799031
Lead Agency:	DEPARTMENT OF TOXIC SUBSTANCES CONTROL
Lead Agency Case Number:	19281213
Latitude:	34.274962
Longitude:	-118.427171
Case Type:	Cleanup Program Site
Case Worker:	Not reported
Local Agency:	Not reported
RB Case Number:	111.0286
File Location:	Not reported
Potential Media Affected:	Aquifer used for drinking water supply
Potential Contaminants of Concern:	Not reported
Site History:	Not reported

HOLCHEM INCORPORATED (Continued) **1000170315**

Click here to access the California GeoTracker records for this facility:

Region:	STATE
Facility Status:	**Open - Site Assessment**
Status Date:	01/04/1990
Global Id:	T0603702196
Lead Agency:	DEPARTMENT OF TOXIC SUBSTANCES CONTROL
Lead Agency Case Number:	19281213
Latitude:	34.2758659
Longitude:	-118.4267069
Case Type:	Cleanup Program Site
Case Worker:	Not reported
Local Agency:	LOS ANGELES, CITY OF
RB Case Number:	913310525
File Location:	Not reported
Potential Media Affected:	Aquifer used for drinking water supply
Potential Contaminants of Concern:	* Solvents
Site History:	Not reported

Click here to access the California GeoTracker records for this facility:

LA Co. Site Mitigation:

Facility ID:	Not reported
Site ID:	SD0000406
Jurisdiction:	County
Case ID:	RO0001407
Abated:	Yes
Assigned To:	Kim Clark
Entered Date:	10/11/2011

WIP:

Region:	4
File Number:	111.0286
File Status:	**Active**
Staff:	MZAIDI
Facility Suite:	Not reported

AWP:

AWP Facility ID:	19281213
Region Code:	3
Region:	GLENDALE
SMBR Branch Code:	SA
SMBR Branch Unit:	SO CAL - GLENDALE
Site Name.:	Not reported
Current Status Date:	05131997
Current Status:	ANNUAL WORKPLAN - ACTIVE SITE
Lead Agency Code:	DTSC
Lead Agency:	DEPT OF TOXIC SUBSTANCES CONTROL
Facility Type:	responsible party
Awp Site Type:	RESPONSIBLE PARTY
NPL:	Not Listed
Tier Of AWP Site:	Not reported
Source Of Funding:	Not reported
Responsible Staff Member:	GFARKAS
Supervisor Responsible:	Not reported

HOLCHEM INCORPORATED (Continued) **1000170315**

SIC Code:	28
Facility SIC:	MANU - CHEMICALS & ALLIED PRODUCTS
RWQCB Code:	LA
RWQCB Associated With Site:	LOS ANGELES
Site Access Controlled:	Not reported
Site Listed HWS List:	Not reported
Hazard Ranking Score:	Not reported
Date Site Hazard Ranked:	Not reported
Groundwater Contamination:	Not reported
# Of Contamination Sources:	0
Lat/Long:	Not reported
Lat/Long (dms):	0 0 0 / 0 0 0
Lat/long Method:	Not reported
Description Of Entity:	Not reported
State Assembly Distt Code:	39
State Senate District:	20

RESPONSE:

Facility ID:	19281213
Site Type:	State Response
Site Type Detail:	State Response or NPL
Acres:	2
National Priorities List:	NO
Cleanup Oversight Agencies:	SMBRP
Lead Agency Description:	DTSC - Site Cleanup Program
Project Manager:	Stephanie Lewis
Supervisor:	Juli Propes
Division Branch:	Cleanup Chatsworth
Site Code:	300593
Site Mgmt. Req.:	NONE SPECIFIED
Assembly:	39
Senate:	20
Special Program Status:	Not reported
Status:	Active
Status Date:	05/13/1997
Restricted Use:	NO
Funding:	Responsible Party
Latitude:	34.27496
Longitude:	-118.4271
APN:	2523-005-006, 2523005006
Past Use:	TRANSFER STATION
Potential COC :	* HALOGENATED SOLVENTS * HYDROCARBON SOLVENTS * OXYGENATED SOLVENTS * UNSPECIFIED ACID SOLUTION Methyl tertbutyl ether (MTBE 1,1,1-Trichloroethane (TCA Trichloroethylene (TCE Vinyl chloride 1,4-Dioxane
Confirmed COC:	* UNSPECIFIED ACID SOLUTION * HALOGENATED SOLVENTS * HYDROCARBON SOLVENTS Methyl tertbutyl ether (MTBE * OXYGENATED SOLVENTS 1,1,1-Trichloroethane (TCA Trichloroethylene (TCE Vinyl chloride 1,4-Dioxane
Potential Description:	OTH, SOIL
Alias Name:	CHASE CHEMICAL CO
Alias Type:	Alternate Name
Alias Name:	2523-005-006
Alias Type:	APN
Alias Name:	2523005006
Alias Type:	APN
Alias Name:	CAD028860955

HOLCHEM INCORPORATED (Continued) **1000170315**

Alias Type: EPA Identification Number
Alias Name: 110000476850
Alias Type: EPA (FRS #)
Alias Name: SL603799031
Alias Type: GeoTracker Global ID
Alias Name: 300593
Alias Type: Project Code (Site Code)
Alias Name: 19281213
Alias Type: Envirostor ID Number

Completed Info:

Completed Area Name: PROJECT WIDE
Completed Sub Area Name: Not reported
Completed Document Type: Remedial Design - Preliminary/Intermediate
Completed Date: 05/30/2006
Comments: approved

Completed Area Name: PROJECT WIDE
Completed Sub Area Name: Not reported
Completed Document Type: Fact Sheets
Completed Date: 04/01/2005
Comments: English version of RAP Fact sheet

Completed Area Name: PROJECT WIDE
Completed Sub Area Name: Not reported
Completed Document Type: Public Notice
Completed Date: 04/01/2005
Comments: Public Notice

Completed Area Name: PROJECT WIDE
Completed Sub Area Name: Not reported
Completed Document Type: Other Report
Completed Date: 10/07/2005
Comments: Offsite soil gas investigation in the residential area downgradient of site (above gw plume).

Completed Area Name: PROJECT WIDE
Completed Sub Area Name: Not reported
Completed Document Type: Treatability Study Workplan
Completed Date: 06/17/2005
Comments: Not reported

Completed Area Name: PROJECT WIDE
Completed Sub Area Name: Not reported
Completed Document Type: Monitoring Report
Completed Date: 07/23/2004
Comments: Not reported

Completed Area Name: PROJECT WIDE
Completed Sub Area Name: Not reported
Completed Document Type: Monitoring Report
Completed Date: 10/10/2006
Comments: Not reported

Completed Area Name: PROJECT WIDE
Completed Sub Area Name: Not reported
Completed Document Type: Monitoring Report
Completed Date: 06/04/2006

HOLCHEM INCORPORATED (Continued) **1000170315**

Comments: This is not a letter for finalizing the report. The submitted report is final and the letter contains recommendations for the next sampling event.

Completed Area Name: PROJECT WIDE
Completed Sub Area Name: Not reported
Completed Document Type: Monitoring Report
Completed Date: 12/02/2005
Comments: Not reported

Completed Area Name: PROJECT WIDE
Completed Sub Area Name: Not reported
Completed Document Type: Monitoring Report
Completed Date: 09/02/2005
Comments: Not reported

Completed Area Name: PROJECT WIDE
Completed Sub Area Name: Not reported
Completed Document Type: Monitoring Report
Completed Date: 06/20/2005
Comments: Not reported

Completed Area Name: PROJECT WIDE
Completed Sub Area Name: Not reported
Completed Document Type: Monitoring Report
Completed Date: 03/02/2005
Comments: Not reported

Completed Area Name: PROJECT WIDE
Completed Sub Area Name: Not reported
Completed Document Type: Monitoring Report
Completed Date: 12/20/2004
Comments: Not reported

Completed Area Name: PROJECT WIDE
Completed Sub Area Name: Not reported
Completed Document Type: Monitoring Report
Completed Date: 08/20/2004
Comments: Not reported

Completed Area Name: PROJECT WIDE
Completed Sub Area Name: Not reported
Completed Document Type: Monitoring Report
Completed Date: 10/30/2006
Comments: We did not have comments so no letter was issued.

Completed Area Name: PROJECT WIDE
Completed Sub Area Name: Not reported
Completed Document Type: Monitoring Report
Completed Date: 01/19/2007
Comments: This is not a letter for finalizing the report. The submitted report is final and the letter contains recommendations for the next sampling event

Completed Area Name: PROJECT WIDE
Completed Sub Area Name: Not reported
Completed Document Type: Monitoring Report

HOLCHEM INCORPORATED (Continued) **1000170315**

Completed Date: 06/01/2007
Comments: revfiewed and approved the report.

Completed Area Name: PROJECT WIDE
Completed Sub Area Name: Not reported
Completed Document Type: Monitoring Report
Completed Date: 08/29/2007
Comments: The monitoring report is adequate as prepared.DTSc comments may be addressed in future monitoring reports.

Completed Area Name: PROJECT WIDE
Completed Sub Area Name: Not reported
Completed Document Type: Remedial Design - Preliminary/Intermediate
Completed Date: 11/07/2007
Comments: The SAP was prepared to address off-site contamination by sampling soil and groundwater for use in remedial system design and implemention.

Completed Area Name: PROJECT WIDE
Completed Sub Area Name: Not reported
Completed Document Type: Treatability Study Workplan
Completed Date: 10/10/2007
Comments: The report was prepared to determine the capture zone.

Completed Area Name: PROJECT WIDE
Completed Sub Area Name: Not reported
Completed Document Type: Site Characterization Workplan
Completed Date: 10/10/2007
Comments: The report provides additional groundwater information to be used in the Remedial Design

Completed Area Name: PROJECT WIDE
Completed Sub Area Name: Not reported
Completed Document Type: Monitoring Report
Completed Date: 11/16/2007
Comments: The monitoring report is adequate as prepared. The remaining comments may be addressed in future monitoring reports.

Completed Area Name: PROJECT WIDE
Completed Sub Area Name: Not reported
Completed Document Type: Monitoring Report
Completed Date: 05/14/2008
Comments: DTSC has not identified any issues that would require modifications in the report.

Completed Area Name: PROJECT WIDE
Completed Sub Area Name: Not reported
Completed Document Type: Fieldwork
Completed Date: 02/25/2008
Comments: Not reported

Completed Area Name: PROJECT WIDE
Completed Sub Area Name: Not reported
Completed Document Type: Monitoring Report
Completed Date: 05/14/2008
Comments: DTSC has not identified any issues that would require modifications of the report.

HOLCHEM INCORPORATED (Continued) **1000170315**

Completed Area Name: PROJECT WIDE
Completed Sub Area Name: Not reported
Completed Document Type: Fieldwork
Completed Date: 04/11/2008
Comments: Not reported

Completed Area Name: PROJECT WIDE
Completed Sub Area Name: Not reported
Completed Document Type: Fieldwork
Completed Date: 05/16/2008
Comments: Not reported

Completed Area Name: PROJECT WIDE
Completed Sub Area Name: Not reported
Completed Document Type: Supplemental Site Investigation Report
Completed Date: 08/31/2009
Comments: Due the changing conditions, other measures will be implemented.

Completed Area Name: PROJECT WIDE
Completed Sub Area Name: Not reported
Completed Document Type: Treatability Study Report
Completed Date: 10/01/2008
Comments: DTSC has not identified any issues that would require modifications of the report/memorandum.

Completed Area Name: PROJECT WIDE
Completed Sub Area Name: Not reported
Completed Document Type: Monitoring Report
Completed Date: 09/11/2008
Comments: DTSC ha s not identified any issues that would require modifications of the report.

Completed Area Name: PROJECT WIDE
Completed Sub Area Name: Not reported
Completed Document Type: Monitoring Report
Completed Date: 11/21/2008
Comments: DTSC ahs not identified any issues that would reouire modifications of the report.

Completed Area Name: PROJECT WIDE
Completed Sub Area Name: Not reported
Completed Document Type: Technical Workplan
Completed Date: 01/09/2009
Comments: DTSC has not identified any issues that would require modifications of the Addendum.

Completed Area Name: PROJECT WIDE
Completed Sub Area Name: Not reported
Completed Document Type: Monitoring Report
Completed Date: 04/28/2009
Comments: Not reported

Completed Area Name: PROJECT WIDE
Completed Sub Area Name: Not reported
Completed Document Type: Monitoring Report
Completed Date: 11/02/2009
Comments: DTSC performed a simultaneous, comparative review for Q1 and Q2

HOLCHEM INCORPORATED (Continued) **1000170315**

reports.

Completed Area Name: PROJECT WIDE
Completed Sub Area Name: Not reported
Completed Document Type: Technical Report
Completed Date: 07/17/2009
Comments: DTSC approved in advance the abandonment and reinstallation of these wells.

Completed Area Name: PROJECT WIDE
Completed Sub Area Name: Not reported
Completed Document Type: Monitoring Report
Completed Date: 10/30/2009
Comments: DTSC needed more information, and provide one memo containg comments on both Q1 and Q2 reports.

Completed Area Name: PROJECT WIDE
Completed Sub Area Name: Not reported
Completed Document Type: Monitoring Report
Completed Date: 12/22/2009
Comments: DTSC needed more information.

Completed Area Name: PROJECT WIDE
Completed Sub Area Name: Not reported
Completed Document Type: *Correspondence - Received
Completed Date: 02/11/2010
Comments: DTSC needed more info.

Completed Area Name: PROJECT WIDE
Completed Sub Area Name: Not reported
Completed Document Type: Technical Workplan
Completed Date: 02/16/2010
Comments: Not reported

Completed Area Name: PROJECT WIDE
Completed Sub Area Name: Not reported
Completed Document Type: Monitoring Report
Completed Date: 02/24/2010
Comments: DTSC accepted the changes that have been made.

Completed Area Name: PROJECT WIDE
Completed Sub Area Name: Not reported
Completed Document Type: Technical Workplan
Completed Date: 02/11/2010
Comments: DTSC has not identified any issues that would require modifications of the document.

Completed Area Name: PROJECT WIDE
Completed Sub Area Name: Not reported
Completed Document Type: Monitoring Report
Completed Date: 07/21/2010
Comments: Not reported

Completed Area Name: PROJECT WIDE
Completed Sub Area Name: Not reported
Completed Document Type: Removal Action Completion Report
Completed Date: 08/03/2010

HOLCHEM INCORPORATED (Continued) **1000170315**

Comments: DTSC needed more information.

Completed Area Name: PROJECT WIDE
Completed Sub Area Name: Not reported
Completed Document Type: Well Completion Report
Completed Date: 01/09/2009
Comments: This technical memorandum presents a summary of site hydrogeology, gw gradient, aquifer test and well construction.

Completed Area Name: PROJECT WIDE
Completed Sub Area Name: Not reported
Completed Document Type: Other Report
Completed Date: 07/30/2008
Comments: The purpose of investigation was to evaluate the lateral and vertical extent of downgradient gw impacts southeast of the Verdugo fault.

Completed Area Name: PROJECT WIDE
Completed Sub Area Name: Not reported
Completed Document Type: Well Decommissioning Report
Completed Date: 03/13/2009
Comments: DTSC has determined that the report contains all elements.

Completed Area Name: PROJECT WIDE
Completed Sub Area Name: Not reported
Completed Document Type: Monitoring Report
Completed Date: 12/22/2010
Comments: DTSC provided its comments in a letter containing other comments (responses, etc.).

Completed Area Name: PROJECT WIDE
Completed Sub Area Name: Not reported
Completed Document Type: Well Completion Report
Completed Date: 01/09/2009
Comments: DTSC has not identified any issues that would require modifications.

Completed Area Name: PROJECT WIDE
Completed Sub Area Name: Not reported
Completed Document Type: Technical Report
Completed Date: 05/10/2007
Comments: DTSC agreed with the proposed modification.

Completed Area Name: PROJECT WIDE
Completed Sub Area Name: Not reported
Completed Document Type: Other Report
Completed Date: 12/22/2010
Comments: DTSC provided its comments in combination with comments for other documents.

Completed Area Name: PROJECT WIDE
Completed Sub Area Name: Not reported
Completed Document Type: Monitoring Report
Completed Date: 12/22/2010
Comments: DTSC provided its comments in combination with other comments (for other docs).

Completed Area Name: PROJECT WIDE
Completed Sub Area Name: Not reported

HOLCHEM INCORPORATED (Continued) **1000170315**

Completed Document Type: Technical Workplan
Completed Date: 02/25/2005
Comments: Not reported

Completed Area Name: PROJECT WIDE
Completed Sub Area Name: Not reported
Completed Document Type: Technical Workplan
Completed Date: 02/22/2005
Comments: The draft report has been complete.

Completed Area Name: PROJECT WIDE
Completed Sub Area Name: Not reported
Completed Document Type: Technical Report
Completed Date: 05/05/2005
Comments: DTSC considered the draft contained all necessary data.

Completed Area Name: PROJECT WIDE
Completed Sub Area Name: Not reported
Completed Document Type: Monitoring Report
Completed Date: 02/23/2011
Comments: DTSC needed more information.

Completed Area Name: PROJECT WIDE
Completed Sub Area Name: Not reported
Completed Document Type: Monitoring Report
Completed Date: 07/26/2011
Comments: DTSC determines the First Quarter 2011 Groundwater Monitoring Report, dated April 30, 20ll does not require revision, and consider final.

Completed Area Name: PROJECT WIDE
Completed Sub Area Name: Not reported
Completed Document Type: Monitoring Report
Completed Date: 10/04/2011
Comments: DTSC determines that the Second Quarter 2011 Groundwater Monitoring Report dated July 29,2011 does not require revision.

Completed Area Name: PROJECT WIDE
Completed Sub Area Name: Not reported
Completed Document Type: Site Characterization Workplan
Completed Date: 09/20/2011
Comments: DTSC dtermines the document (Workplan) dated July 29, 2011 does not require revision.

Completed Area Name: PROJECT WIDE
Completed Sub Area Name: Not reported
Completed Document Type: Monitoring Report
Completed Date: 01/24/2012
Comments: DTSC determines that the Third Quarter 2011 Groundwater Monitoring Report, dated October 30,2011 does not require revision.

Completed Area Name: PROJECT WIDE
Completed Sub Area Name: Not reported
Completed Document Type: Monitoring Report
Completed Date: 03/08/2012
Comments: DTSC determines that the 4th Quarter 2011 Groundwater Monitoring Report dated January 31, 2012 does not require revision and approves the report.

HOLCHEM INCORPORATED (Continued) **1000170315**

Completed Area Name: PROJECT WIDE
Completed Sub Area Name: Not reported
Completed Document Type: Site Characterization Report
Completed Date: 08/07/2012
Comments: Report dated June 28,2012 requires no revision.

Completed Area Name: PROJECT WIDE
Completed Sub Area Name: Not reported
Completed Document Type: Monitoring Report
Completed Date: 05/29/2012
Comments: DTSC reviewd The First Quarter 2012 Groundwater Monitoring Report dated April 26, 2012, and determines does not require revisions.

Completed Area Name: PROJECT WIDE
Completed Sub Area Name: Not reported
Completed Document Type: Monitoring Report
Completed Date: 09/11/2012
Comments: The Second Quarter 2012 Groundwater Monitoring Report, dated July 31, 2012 does not require revision.

Completed Area Name: PROJECT WIDE
Completed Sub Area Name: Not reported
Completed Document Type: Monitoring Report
Completed Date: 01/17/2013
Comments: Document accepted as final if comments are noted in subsequent monitoring report.

Completed Area Name: PROJECT WIDE
Completed Sub Area Name: Not reported
Completed Document Type: Monitoring Report
Completed Date: 04/30/2013
Comments: Review of the Fourth Quarter 2012 GW monitoring report completed 4/30/2013

Completed Area Name: PROJECT WIDE
Completed Sub Area Name: Not reported
Completed Document Type: Monitoring Report
Completed Date: 11/26/2013
Comments: The first quarter 2013 groundwater monitoring report comment letter was completed on 11/26/2013

Completed Area Name: PROJECT WIDE
Completed Sub Area Name: Not reported
Completed Document Type: CEQA - Initial Study/ Neg. Declaration
Completed Date: 01/16/2001
Comments: Not reported

Completed Area Name: PROJECT WIDE
Completed Sub Area Name: Not reported
Completed Document Type: CEQA - Initial Study/ Neg. Declaration
Completed Date: 02/10/2000
Comments: Not reported

Completed Area Name: PROJECT WIDE
Completed Sub Area Name: Not reported
Completed Document Type: * Cost Recovery Settlements/Decrees
Completed Date: 04/26/2000

HOLCHEM INCORPORATED (Continued) **1000170315**

Comments: Not reported

Completed Area Name: PROJECT WIDE
Completed Sub Area Name: Not reported
Completed Document Type: Unilateral Order (I/SE, RAO, CAO, EPA AO)
Completed Date: 05/08/1997
Comments: letter sent to Holchem. Holchem has not notified DTSC as to who their Project Coordinator is. Holchem filed a petition for Writ of Mandate, Preliminary, and Permanent Injunctions, with the Los Angeles Superior Court. Notice of Proposed Determination of Non-Compliance with Order

Completed Area Name: PROJECT WIDE
Completed Sub Area Name: Not reported
Completed Document Type: Correspondence
Completed Date: 12/06/2010
Comments: DTSC provides estimates.

Completed Area Name: PROJECT WIDE
Completed Sub Area Name: Not reported
Completed Document Type: * Cost Recovery Settlements/Decrees
Completed Date: 07/23/2007
Comments: Consent Decree II implements the RAP (Pump-and-Treat for groundwater). Not reported

Completed Area Name: PROJECT WIDE
Completed Sub Area Name: Not reported
Completed Document Type: Removal Action Workplan
Completed Date: 01/16/2001
Comments: CEQA Negative Declaration for RAW was approved. RAW was approved.

Completed Area Name: PROJECT WIDE
Completed Sub Area Name: Not reported
Completed Document Type: Preliminary Assessment Report
Completed Date: 04/16/1998
Comments: Not reported

Completed Area Name: PROJECT WIDE
Completed Sub Area Name: Not reported
Completed Document Type: Removal Action Completion Report
Completed Date: 10/16/1997
Comments: Fence and post site.

Completed Area Name: PROJECT WIDE
Completed Sub Area Name: Not reported
Completed Document Type: Remedial Action Plan
Completed Date: 12/16/2005
Comments: DTSC approved the Final RAP for the Site, which consists of soil vapor extraction; groundwater pumping and treatment for source removal and containment; monitored natural attenuation of the contaminants and institutional controls through deed restrictions.

Completed Area Name: PROJECT WIDE
Completed Sub Area Name: Not reported
Completed Document Type: Remedial Investigation / Feasibility Study
Completed Date: 02/05/2005
Comments: The RI/FS was completed and the letter of completion was issued.

HOLCHEM INCORPORATED (Continued) **1000170315**

Completed Area Name:	PROJECT WIDE
Completed Sub Area Name:	Not reported
Completed Document Type:	Design/Implementation Workplan
Completed Date:	01/24/2008
Comments:	DTSC approved the RD Work Plan which later will be ammended.

Future Area Name:	PROJECT WIDE
Future Sub Area Name:	Not reported
Future Document Type:	Removal Action Completion Report
Future Due Date:	2016
Future Area Name:	PROJECT WIDE
Future Sub Area Name:	Not reported
Future Document Type:	Certification
Future Due Date:	2015
Schedule Area Name:	Not reported
Schedule Sub Area Name:	Not reported
Schedule Document Type:	Not reported
Schedule Due Date:	Not reported
Schedule Revised Date:	Not reported

EMI:

Year:	1987
County Code:	19
Air Basin:	SC
Facility ID:	10724
Air District Name:	SC
SIC Code:	2842
Air District Name:	SOUTH COAST AQMD
Community Health Air Pollution Info System:	Not reported
Consolidated Emission Reporting Rule:	Not reported
Total Organic Hydrocarbon Gases Tons/Yr:	1
Reactive Organic Gases Tons/Yr:	0
Carbon Monoxide Emissions Tons/Yr:	0
NOX - Oxides of Nitrogen Tons/Yr:	0
SOX - Oxides of Sulphur Tons/Yr:	0
Particulate Matter Tons/Yr:	0
Part. Matter 10 Micrometers & Smllr Tons/Yr:	0

ENVIROSTOR:

Facility ID:	71002346
Status:	Refer: Other Agency
Status Date:	Not reported
Site Code:	Not reported
Site Type:	Tiered Permit
Site Type Detailed:	Tiered Permit
Acres:	Not reported
NPL:	NO
Regulatory Agencies:	NONE SPECIFIED
Lead Agency:	NONE SPECIFIED
Program Manager:	Not reported
Supervisor:	Not reported
Division Branch:	Cleanup Chatsworth
Assembly:	39
Senate:	20
Special Program:	Not reported
Restricted Use:	NO

HOLCHEM INCORPORATED (Continued) **1000170315**

Site Mgmt Req: NONE SPECIFIED
Funding: Not reported
Latitude: 34.2625
Longitude: -118.4261
APN: NONE SPECIFIED
Past Use: NONE SPECIFIED
Potential COC: NONE SPECIFIED
Confirmed COC: NONE SPECIFIED
Potential Description: NONE SPECIFIED
Alias Name: CAD028860955
Alias Type: EPA Identification Number
Alias Name: 110000476850
Alias Type: EPA (FRS #)
Alias Name: 71002346
Alias Type: Envirostor ID Number

Completed Info:
Completed Area Name: Not reported
Completed Sub Area Name: Not reported
Completed Document Type: Not reported
Completed Date: Not reported
Comments: Not reported

Future Area Name: Not reported
Future Sub Area Name: Not reported
Future Document Type: Not reported
Future Due Date: Not reported
Schedule Area Name: Not reported
Schedule Sub Area Name: Not reported
Schedule Document Type: Not reported
Schedule Due Date: Not reported
Schedule Revised Date: Not reported

Facility ID: 19281213
Status: Active
Status Date: 05/13/1997
Site Code: 300593
Site Type: State Response
Site Type Detailed: State Response or NPL
Acres: 2
NPL: NO
Regulatory Agencies: SMBRP
Lead Agency: SMBRP
Program Manager: Stephanie Lewis
Supervisor: Juli Propes
Division Branch: Cleanup Chatsworth
Assembly: 39
Senate: 20
Special Program: Not reported
Restricted Use: NO
Site Mgmt Req: NONE SPECIFIED
Funding: Responsible Party
Latitude: 34.27496
Longitude: -118.4271
APN: 2523-005-006, 2523005006
Past Use: TRANSFER STATION
Potential COC: * HALOGENATED SOLVENTS * HYDROCARBON SOLVENTS * OXYGENATED SOLVENTS * UNSPECIFIED ACID SOLUTION Methyl tertbutyl ether (MTBE

HOLCHEM INCORPORATED (Continued) **1000170315**

1,1,1-Trichloroethane (TCA Trichloroethylene (TCE Vinyl chloride
1,4-Dioxane
Confirmed COC: * UNSPECIFIED ACID SOLUTION * HALOGENATED SOLVENTS * HYDROCARBON SOLVENTS Methyl tertbutyl ether (MTBE * OXYGENATED SOLVENTS
1,1,1-Trichloroethane (TCA Trichloroethylene (TCE Vinyl chloride
1,4-Dioxane
Potential Description: OTH, SOIL
Alias Name: CHASE CHEMICAL CO
Alias Type: Alternate Name
Alias Name: 2523-005-006
Alias Type: APN
Alias Name: 2523005006
Alias Type: APN
Alias Name: CAD028860955
Alias Type: EPA Identification Number
Alias Name: 110000476850
Alias Type: EPA (FRS #)
Alias Name: SL603799031
Alias Type: GeoTracker Global ID
Alias Name: 300593
Alias Type: Project Code (Site Code)
Alias Name: 19281213
Alias Type: Envirostor ID Number

Completed Info:
Completed Area Name: PROJECT WIDE
Completed Sub Area Name: Not reported
Completed Document Type: Remedial Design - Preliminary/Intermediate
Completed Date: 05/30/2006
Comments: approved

Completed Area Name: PROJECT WIDE
Completed Sub Area Name: Not reported
Completed Document Type: Fact Sheets
Completed Date: 04/01/2005
Comments: English version of RAP Fact sheet

Completed Area Name: PROJECT WIDE
Completed Sub Area Name: Not reported
Completed Document Type: Public Notice
Completed Date: 04/01/2005
Comments: Public Notice

Completed Area Name: PROJECT WIDE
Completed Sub Area Name: Not reported
Completed Document Type: Other Report
Completed Date: 10/07/2005
Comments: Offsite soil gas investigation in the residential area downgradient of site (above gw plume).

Completed Area Name: PROJECT WIDE
Completed Sub Area Name: Not reported
Completed Document Type: Treatability Study Workplan
Completed Date: 06/17/2005
Comments: Not reported

Completed Area Name: PROJECT WIDE
Completed Sub Area Name: Not reported

HOLCHEM INCORPORATED (Continued) **1000170315**

Completed Document Type: Monitoring Report
Completed Date: 07/23/2004
Comments: Not reported

Completed Area Name: PROJECT WIDE
Completed Sub Area Name: Not reported
Completed Document Type: Monitoring Report
Completed Date: 10/10/2006
Comments: Not reported

Completed Area Name: PROJECT WIDE
Completed Sub Area Name: Not reported
Completed Document Type: Monitoring Report
Completed Date: 06/04/2006
Comments: This is not a letter for finalizing the report. The submitted report is final and the letter contains recommendations for the next sampling event.

Completed Area Name: PROJECT WIDE
Completed Sub Area Name: Not reported
Completed Document Type: Monitoring Report
Completed Date: 12/02/2005
Comments: Not reported

Completed Area Name: PROJECT WIDE
Completed Sub Area Name: Not reported
Completed Document Type: Monitoring Report
Completed Date: 09/02/2005
Comments: Not reported

Completed Area Name: PROJECT WIDE
Completed Sub Area Name: Not reported
Completed Document Type: Monitoring Report
Completed Date: 06/20/2005
Comments: Not reported

Completed Area Name: PROJECT WIDE
Completed Sub Area Name: Not reported
Completed Document Type: Monitoring Report
Completed Date: 03/02/2005
Comments: Not reported

Completed Area Name: PROJECT WIDE
Completed Sub Area Name: Not reported
Completed Document Type: Monitoring Report
Completed Date: 12/20/2004
Comments: Not reported

Completed Area Name: PROJECT WIDE
Completed Sub Area Name: Not reported
Completed Document Type: Monitoring Report
Completed Date: 08/20/2004
Comments: Not reported

Completed Area Name: PROJECT WIDE
Completed Sub Area Name: Not reported
Completed Document Type: Monitoring Report

HOLCHEM INCORPORATED (Continued) **1000170315**

Completed Date: 10/30/2006
Comments: We did not have comments so no letter was issued.

Completed Area Name: PROJECT WIDE
Completed Sub Area Name: Not reported
Completed Document Type: Monitoring Report
Completed Date: 01/19/2007
Comments: This is not a letter for finalizing the report. The submitted report is final and the letter contains recommendations for the next sampling event

Completed Area Name: PROJECT WIDE
Completed Sub Area Name: Not reported
Completed Document Type: Monitoring Report
Completed Date: 06/01/2007
Comments: revfiewed and approved the report.

Completed Area Name: PROJECT WIDE
Completed Sub Area Name: Not reported
Completed Document Type: Monitoring Report
Completed Date: 08/29/2007
Comments: The monitoring report is adequate as prepared.DTSc comments may be addressed in future monitoring reports.

Completed Area Name: PROJECT WIDE
Completed Sub Area Name: Not reported
Completed Document Type: Remedial Design - Preliminary/Intermediate
Completed Date: 11/07/2007
Comments: The SAP was prepared to address off-site contamination by sampling soil and groundwater for use in remedial system design and implemention.

Completed Area Name: PROJECT WIDE
Completed Sub Area Name: Not reported
Completed Document Type: Treatability Study Workplan
Completed Date: 10/10/2007
Comments: The report was prepared to determine the capture zone.

Completed Area Name: PROJECT WIDE
Completed Sub Area Name: Not reported
Completed Document Type: Site Characterization Workplan
Completed Date: 10/10/2007
Comments: The report provides additional groundwater information to be used in the Remedial Design

Completed Area Name: PROJECT WIDE
Completed Sub Area Name: Not reported
Completed Document Type: Monitoring Report
Completed Date: 11/16/2007
Comments: The monitoring report is adequate as prepared. The remaining comments may be addressed in future monitoring reports.

Completed Area Name: PROJECT WIDE
Completed Sub Area Name: Not reported
Completed Document Type: Monitoring Report
Completed Date: 05/14/2008
Comments: DTSC has not identified any issues that would require modifications

HOLCHEM INCORPORATED (Continued) **1000170315**

in the report.

Completed Area Name: PROJECT WIDE
Completed Sub Area Name: Not reported
Completed Document Type: Fieldwork
Completed Date: 02/25/2008
Comments: Not reported

Completed Area Name: PROJECT WIDE
Completed Sub Area Name: Not reported
Completed Document Type: Monitoring Report
Completed Date: 05/14/2008
Comments: DTSC has not identified any issues that would require modifications of the report.

Completed Area Name: PROJECT WIDE
Completed Sub Area Name: Not reported
Completed Document Type: Fieldwork
Completed Date: 04/11/2008
Comments: Not reported

Completed Area Name: PROJECT WIDE
Completed Sub Area Name: Not reported
Completed Document Type: Fieldwork
Completed Date: 05/16/2008
Comments: Not reported

Completed Area Name: PROJECT WIDE
Completed Sub Area Name: Not reported
Completed Document Type: Supplemental Site Investigation Report
Completed Date: 08/31/2009
Comments: Due the changing conditions, other measures will be implemented.

Completed Area Name: PROJECT WIDE
Completed Sub Area Name: Not reported
Completed Document Type: Treatability Study Report
Completed Date: 10/01/2008
Comments: DTSC has not identified any issues that would require modifications of the report/memorandum.

Completed Area Name: PROJECT WIDE
Completed Sub Area Name: Not reported
Completed Document Type: Monitoring Report
Completed Date: 09/11/2008
Comments: DTSC ha s not identified any issues that would require modifications of the report.

Completed Area Name: PROJECT WIDE
Completed Sub Area Name: Not reported
Completed Document Type: Monitoring Report
Completed Date: 11/21/2008
Comments: DTSC ahs not identified any issues that would reouire modifications of the report.

Completed Area Name: PROJECT WIDE
Completed Sub Area Name: Not reported
Completed Document Type: Technical Workplan

HOLCHEM INCORPORATED (Continued) **1000170315**

Completed Date: 01/09/2009
Comments: DTSC has not identified any issues that would require modifications of the Addendum.

Completed Area Name: PROJECT WIDE
Completed Sub Area Name: Not reported
Completed Document Type: Monitoring Report
Completed Date: 04/28/2009
Comments: Not reported

Completed Area Name: PROJECT WIDE
Completed Sub Area Name: Not reported
Completed Document Type: Monitoring Report
Completed Date: 11/02/2009
Comments: DTSC performed a simultaneous, comparative review for Q1 and Q2 reports.

Completed Area Name: PROJECT WIDE
Completed Sub Area Name: Not reported
Completed Document Type: Technical Report
Completed Date: 07/17/2009
Comments: DTSC approved in advance the abandonment and reinstallation of these wells.

Completed Area Name: PROJECT WIDE
Completed Sub Area Name: Not reported
Completed Document Type: Monitoring Report
Completed Date: 10/30/2009
Comments: DTSC needed more information, and provide one memo containg comments on both Q1 and Q2 reports.

Completed Area Name: PROJECT WIDE
Completed Sub Area Name: Not reported
Completed Document Type: Monitoring Report
Completed Date: 12/22/2009
Comments: DTSC needed more information.

Completed Area Name: PROJECT WIDE
Completed Sub Area Name: Not reported
Completed Document Type: *Correspondence - Received
Completed Date: 02/11/2010
Comments: DTSC needed more info.

Completed Area Name: PROJECT WIDE
Completed Sub Area Name: Not reported
Completed Document Type: Technical Workplan
Completed Date: 02/16/2010
Comments: Not reported

Completed Area Name: PROJECT WIDE
Completed Sub Area Name: Not reported
Completed Document Type: Monitoring Report
Completed Date: 02/24/2010
Comments: DTSC accepted the changes that have been made.

Completed Area Name: PROJECT WIDE
Completed Sub Area Name: Not reported

HOLCHEM INCORPORATED (Continued) **1000170315**

Completed Document Type: Technical Workplan
Completed Date: 02/11/2010
Comments: DTSC has not identified any issues that would require modifications of the document.

Completed Area Name: PROJECT WIDE
Completed Sub Area Name: Not reported
Completed Document Type: Monitoring Report
Completed Date: 07/21/2010
Comments: Not reported

Completed Area Name: PROJECT WIDE
Completed Sub Area Name: Not reported
Completed Document Type: Removal Action Completion Report
Completed Date: 08/03/2010
Comments: DTSC needed more information.

Completed Area Name: PROJECT WIDE
Completed Sub Area Name: Not reported
Completed Document Type: Well Completion Report
Completed Date: 01/09/2009
Comments: This technical memorandum presents a summary of site hydrogeology, gw gradient, aquifer test and well construction.

Completed Area Name: PROJECT WIDE
Completed Sub Area Name: Not reported
Completed Document Type: Other Report
Completed Date: 07/30/2008
Comments: The purpose of investigation was to evaluate the lateral and vertical extent of downgradient gw impacts southeast of the Verdugo fault.

Completed Area Name: PROJECT WIDE
Completed Sub Area Name: Not reported
Completed Document Type: Well Decommissioning Report
Completed Date: 03/13/2009
Comments: DTSC has determined that the report contains all elements.

Completed Area Name: PROJECT WIDE
Completed Sub Area Name: Not reported
Completed Document Type: Monitoring Report
Completed Date: 12/22/2010
Comments: DTSC provided its comments in a letter containing other comments (responses, etc.).

Completed Area Name: PROJECT WIDE
Completed Sub Area Name: Not reported
Completed Document Type: Well Completion Report
Completed Date: 01/09/2009
Comments: DTSC has not identified any issues that would require modifications.

Completed Area Name: PROJECT WIDE
Completed Sub Area Name: Not reported
Completed Document Type: Technical Report
Completed Date: 05/10/2007
Comments: DTSC agreed with the proposed modification.

Completed Area Name: PROJECT WIDE

HOLCHEM INCORPORATED (Continued) **1000170315**

Completed Sub Area Name: Not reported
Completed Document Type: Other Report
Completed Date: 12/22/2010
Comments: DTSC provided its comments in combination with comments for other documents.

Completed Area Name: PROJECT WIDE
Completed Sub Area Name: Not reported
Completed Document Type: Monitoring Report
Completed Date: 12/22/2010
Comments: DTSC provided its comments in combination with other comments (for other docs).

Completed Area Name: PROJECT WIDE
Completed Sub Area Name: Not reported
Completed Document Type: Technical Workplan
Completed Date: 02/25/2005
Comments: Not reported

Completed Area Name: PROJECT WIDE
Completed Sub Area Name: Not reported
Completed Document Type: Technical Workplan
Completed Date: 02/22/2005
Comments: The draft report has been complete.

Completed Area Name: PROJECT WIDE
Completed Sub Area Name: Not reported
Completed Document Type: Technical Report
Completed Date: 05/05/2005
Comments: DTSC considered the draft contained all necessary data.

Completed Area Name: PROJECT WIDE
Completed Sub Area Name: Not reported
Completed Document Type: Monitoring Report
Completed Date: 02/23/2011
Comments: DTSC needed more information.

Completed Area Name: PROJECT WIDE
Completed Sub Area Name: Not reported
Completed Document Type: Monitoring Report
Completed Date: 07/26/2011
Comments: DTSC determines the First Quarter 2011 Groundwater Monitoring Report, dated April 30, 20ll does not require revision, and consider final.

Completed Area Name: PROJECT WIDE
Completed Sub Area Name: Not reported
Completed Document Type: Monitoring Report
Completed Date: 10/04/2011
Comments: DTSC determines that the Second Quarter 2011 Groundwater Monitoring Report dated July 29,2011 does not require revision.

Completed Area Name: PROJECT WIDE
Completed Sub Area Name: Not reported
Completed Document Type: Site Characterization Workplan
Completed Date: 09/20/2011
Comments: DTSC dtermines the document (Workplan) dated July 29, 2011 does not require revision.

HOLCHEM INCORPORATED (Continued) **1000170315**

Completed Area Name: PROJECT WIDE
Completed Sub Area Name: Not reported
Completed Document Type: Monitoring Report
Completed Date: 01/24/2012
Comments: DTSC determines that the Third Quarter 2011 Groundwater Monitoring Report, dated October 30,2011 does not require revision.

Completed Area Name: PROJECT WIDE
Completed Sub Area Name: Not reported
Completed Document Type: Monitoring Report
Completed Date: 03/08/2012
Comments: DTSC determines that the 4th Quarter 2011 Groundwater Monitoring Report dated January 31, 2012 does not require revision and approves the report.

Completed Area Name: PROJECT WIDE
Completed Sub Area Name: Not reported
Completed Document Type: Site Characterization Report
Completed Date: 08/07/2012
Comments: Report dated June 28,2012 requires no revision.

Completed Area Name: PROJECT WIDE
Completed Sub Area Name: Not reported
Completed Document Type: Monitoring Report
Completed Date: 05/29/2012
Comments: DTSC reviewd The First Quarter 2012 Groundwater Monitoring Report dated April 26, 2012, and determines does not require revisions.

Completed Area Name: PROJECT WIDE
Completed Sub Area Name: Not reported
Completed Document Type: Monitoring Report
Completed Date: 09/11/2012
Comments: The Second Quarter 2012 Groundwater Monitoring Report, dated July 31, 2012 does not require revision.

Completed Area Name: PROJECT WIDE
Completed Sub Area Name: Not reported
Completed Document Type: Monitoring Report
Completed Date: 01/17/2013
Comments: Document accepted as final if comments are noted in subsequent monitoring report.

Completed Area Name: PROJECT WIDE
Completed Sub Area Name: Not reported
Completed Document Type: Monitoring Report
Completed Date: 04/30/2013
Comments: Review of the Fourth Quarter 2012 GW monitoring report completed 4/30/2013

Completed Area Name: PROJECT WIDE
Completed Sub Area Name: Not reported
Completed Document Type: Monitoring Report
Completed Date: 11/26/2013
Comments: The first quarter 2013 groundwater monitoring report comment letter was completed on 11/26/2013

Completed Area Name: PROJECT WIDE

HOLCHEM INCORPORATED (Continued) **1000170315**

Completed Sub Area Name: Not reported
Completed Document Type: CEQA - Initial Study/ Neg. Declaration
Completed Date: 01/16/2001
Comments: Not reported

Completed Area Name: PROJECT WIDE
Completed Sub Area Name: Not reported
Completed Document Type: CEQA - Initial Study/ Neg. Declaration
Completed Date: 02/10/2000
Comments: Not reported

Completed Area Name: PROJECT WIDE
Completed Sub Area Name: Not reported
Completed Document Type: * Cost Recovery Settlements/Decrees
Completed Date: 04/26/2000
Comments: Not reported

Completed Area Name: PROJECT WIDE
Completed Sub Area Name: Not reported
Completed Document Type: Unilateral Order (I/SE, RAO, CAO, EPA AO)
Completed Date: 05/08/1997
Comments: letter sent to Holchem. Holchem has not notified DTSC as to who their Project Coordinator is. Holchem filed a petition for Writ of Mandate, Preliminary, and Permanent Injunctions, with the Los Angeles Superior Court. Notice of Proposed Determination of Non-Compliance with Order

Completed Area Name: PROJECT WIDE
Completed Sub Area Name: Not reported
Completed Document Type: Correspondence
Completed Date: 12/06/2010
Comments: DTSC provides estimates.

Completed Area Name: PROJECT WIDE
Completed Sub Area Name: Not reported
Completed Document Type: * Cost Recovery Settlements/Decrees
Completed Date: 07/23/2007
Comments: Consent Decree II implements the RAP (Pump-and-Treat for groundwater). Not reported

Completed Area Name: PROJECT WIDE
Completed Sub Area Name: Not reported
Completed Document Type: Removal Action Workplan
Completed Date: 01/16/2001
Comments: CEQA Negative Declaration for RAW was approved. RAW was approved.

Completed Area Name: PROJECT WIDE
Completed Sub Area Name: Not reported
Completed Document Type: Preliminary Assessment Report
Completed Date: 04/16/1998
Comments: Not reported

Completed Area Name: PROJECT WIDE
Completed Sub Area Name: Not reported
Completed Document Type: Removal Action Completion Report
Completed Date: 10/16/1997
Comments: Fence and post site.

HOLCHEM INCORPORATED (Continued) **1000170315**

Completed Area Name: PROJECT WIDE
Completed Sub Area Name: Not reported
Completed Document Type: Remedial Action Plan
Completed Date: 12/16/2005
Comments: DTSC approved the Final RAP for the Site, which consists of soil vapor extraction; groundwater pumping and treatment for source removal and containment; monitored natural attenuation of the contaminants and institutional controls through deed restrictions.

Completed Area Name: PROJECT WIDE
Completed Sub Area Name: Not reported
Completed Document Type: Remedial Investigation / Feasibility Study
Completed Date: 02/05/2005
Comments: The RI/FS was completed and the letter of completion was issued.

Completed Area Name: PROJECT WIDE
Completed Sub Area Name: Not reported
Completed Document Type: Design/Implementation Workplan
Completed Date: 01/24/2008
Comments: DTSC approved the RD Work Plan which later will be ammended.

Future Area Name: PROJECT WIDE
Future Sub Area Name: Not reported
Future Document Type: Removal Action Completion Report
Future Due Date: 2016
Future Area Name: PROJECT WIDE
Future Sub Area Name: Not reported
Future Document Type: Certification
Future Due Date: 2015
Schedule Area Name: Not reported
Schedule Sub Area Name: Not reported
Schedule Document Type: Not reported
Schedule Due Date: Not reported
Schedule Revised Date: Not reported

Count: 8 records.

ORPHAN SUMMARY

City	EDR ID	Site Name	Site Address	Zip	Database(s)
ARLETA-PACOIMA	S102438981	THRIFTY #230	12957 VAN NUYS BLVD	91331	LUST
LAKE VIEW TERRACE	S107538909		IN ALLEY BEHIND 12976 PAXTON S	91331	CDL
LOS ANGELES	S107537504		ALLEY WAY AT 9501 HICKORY ST		CDL
LOS ANGELES	S107537501		ALLEY BEHIND 9217 LAUREL ST		CDL
LOS ANGELES	S107537634		AT WOODMAN AND BRANSFORD STREE		CDL
PACOIMA	1011845386	TUJUNGA WELLFIELD SITE DISCOVERY	ROSCOE BLVD AND NAGLE AVENUE		CERCLIS
PACOIMA, ARLETA, SUN	S111120536	TUJUNGA WELLFIELD DISCOVERY PROJEC	PACOIMA, ARLETA, SUN VALLEY, S	91331	ENVIROSTOR
VAN NUYS	S109422343	VALLEY BRICK LANDFILL	NOBLE AVE. AND CALVERT ST.		SWF/LF

GOVERNMENT RECORDS SEARCHED / DATA CURRENCY TRACKING

To maintain currency of the following federal and state databases, EDR contacts the appropriate governmental agency on a monthly or quarterly basis, as required.

Number of Days to Update: Provides confirmation that EDR is reporting records that have been updated within 90 days from the date the government agency made the information available to the public.

STANDARD ENVIRONMENTAL RECORDS

Federal NPL site list

NPL: National Priority List

National Priorities List (Superfund). The NPL is a subset of CERCLIS and identifies over 1,200 sites for priority cleanup under the Superfund Program. NPL sites may encompass relatively large areas. As such, EDR provides polygon coverage for over 1,000 NPL site boundaries produced by EPA's Environmental Photographic Interpretation Center (EPIC) and regional EPA offices.

Date of Government Version: 09/29/2014
Date Data Arrived at EDR: 10/08/2014
Date Made Active in Reports: 11/17/2014
Number of Days to Update: 40

Source: EPA
Telephone: N/A
Last EDR Contact: 01/08/2015
Next Scheduled EDR Contact: 04/20/2015
Data Release Frequency: Quarterly

NPL Site Boundaries

Sources:

EPA's Environmental Photographic Interpretation Center (EPIC)
Telephone: 202-564-7333

EPA Region 1
Telephone 617-918-1143

EPA Region 6
Telephone: 214-655-6659

EPA Region 3
Telephone 215-814-5418

EPA Region 7
Telephone: 913-551-7247

EPA Region 4
Telephone 404-562-8033

EPA Region 8
Telephone: 303-312-6774

EPA Region 5
Telephone 312-886-6686

EPA Region 9
Telephone: 415-947-4246

EPA Region 10
Telephone 206-553-8665

Proposed NPL: Proposed National Priority List Sites

A site that has been proposed for listing on the National Priorities List through the issuance of a proposed rule in the Federal Register. EPA then accepts public comments on the site, responds to the comments, and places on the NPL those sites that continue to meet the requirements for listing.

Date of Government Version: 09/29/2014
Date Data Arrived at EDR: 10/08/2014
Date Made Active in Reports: 11/17/2014
Number of Days to Update: 40

Source: EPA
Telephone: N/A
Last EDR Contact: 01/08/2015
Next Scheduled EDR Contact: 04/20/2015
Data Release Frequency: Quarterly

NPL LIENS: Federal Superfund Liens

Federal Superfund Liens. Under the authority granted the USEPA by CERCLA of 1980, the USEPA has the authority to file liens against real property in order to recover remedial action expenditures or when the property owner received notification of potential liability. USEPA compiles a listing of filed notices of Superfund Liens.

Date of Government Version: 10/15/1991
Date Data Arrived at EDR: 02/02/1994
Date Made Active in Reports: 03/30/1994
Number of Days to Update: 56

Source: EPA
Telephone: 202-564-4267
Last EDR Contact: 08/15/2011
Next Scheduled EDR Contact: 11/28/2011
Data Release Frequency: No Update Planned

Federal Delisted NPL site list

DELISTED NPL: National Priority List Deletions

The National Oil and Hazardous Substances Pollution Contingency Plan (NCP) establishes the criteria that the EPA uses to delete sites from the NPL. In accordance with 40 CFR 300.425.(e), sites may be deleted from the NPL where no further response is appropriate.

Date of Government Version: 09/29/2014	Source: EPA
Date Data Arrived at EDR: 10/08/2014	Telephone: N/A
Date Made Active in Reports: 11/17/2014	Last EDR Contact: 01/08/2015
Number of Days to Update: 40	Next Scheduled EDR Contact: 04/20/2015
	Data Release Frequency: Quarterly

Federal CERCLIS list

CERCLIS: Comprehensive Environmental Response, Compensation, and Liability Information System

CERCLIS contains data on potentially hazardous waste sites that have been reported to the USEPA by states, municipalities, private companies and private persons, pursuant to Section 103 of the Comprehensive Environmental Response, Compensation, and Liability Act (CERCLA). CERCLIS contains sites which are either proposed to or on the National Priorities List (NPL) and sites which are in the screening and assessment phase for possible inclusion on the NPL.

Date of Government Version: 10/25/2013	Source: EPA
Date Data Arrived at EDR: 11/11/2013	Telephone: 703-412-9810
Date Made Active in Reports: 02/13/2014	Last EDR Contact: 01/09/2015
Number of Days to Update: 94	Next Scheduled EDR Contact: 03/09/2015
	Data Release Frequency: Quarterly

FEDERAL FACILITY: Federal Facility Site Information listing

A listing of National Priority List (NPL) and Base Realignment and Closure (BRAC) sites found in the Comprehensive Environmental Response, Compensation and Liability Information System (CERCLIS) Database where EPA Federal Facilities Restoration and Reuse Office is involved in cleanup activities.

Date of Government Version: 07/21/2014	Source: Environmental Protection Agency
Date Data Arrived at EDR: 10/07/2014	Telephone: 703-603-8704
Date Made Active in Reports: 10/20/2014	Last EDR Contact: 01/09/2015
Number of Days to Update: 13	Next Scheduled EDR Contact: 04/20/2015
	Data Release Frequency: Varies

Federal CERCLIS NFRAP site List

CERCLIS-NFRAP: CERCLIS No Further Remedial Action Planned

Archived sites are sites that have been removed and archived from the inventory of CERCLIS sites. Archived status indicates that, to the best of EPA's knowledge, assessment at a site has been completed and that EPA has determined no further steps will be taken to list this site on the National Priorities List (NPL), unless information indicates this decision was not appropriate or other considerations require a recommendation for listing at a later time. This decision does not necessarily mean that there is no hazard associated with a given site; it only means that, based upon available information, the location is not judged to be a potential NPL site.

Date of Government Version: 10/25/2013	Source: EPA
Date Data Arrived at EDR: 11/11/2013	Telephone: 703-412-9810
Date Made Active in Reports: 02/13/2014	Last EDR Contact: 01/09/2015
Number of Days to Update: 94	Next Scheduled EDR Contact: 03/09/2015
	Data Release Frequency: Quarterly

Federal RCRA CORRACTS facilities list

CORRACTS: Corrective Action Report

CORRACTS identifies hazardous waste handlers with RCRA corrective action activity.

Date of Government Version: 06/10/2014
Date Data Arrived at EDR: 07/02/2014
Date Made Active in Reports: 09/18/2014
Number of Days to Update: 78

Source: EPA
Telephone: 800-424-9346
Last EDR Contact: 12/29/2014
Next Scheduled EDR Contact: 04/13/2015
Data Release Frequency: Quarterly

Federal RCRA non-CORRACTS TSD facilities list

RCRA-TSDF: RCRA - Treatment, Storage and Disposal

RCRAInfo is EPA's comprehensive information system, providing access to data supporting the Resource Conservation and Recovery Act (RCRA) of 1976 and the Hazardous and Solid Waste Amendments (HSWA) of 1984. The database includes selective information on sites which generate, transport, store, treat and/or dispose of hazardous waste as defined by the Resource Conservation and Recovery Act (RCRA). Transporters are individuals or entities that move hazardous waste from the generator offsite to a facility that can recycle, treat, store, or dispose of the waste. TSDFs treat, store, or dispose of the waste.

Date of Government Version: 06/10/2014
Date Data Arrived at EDR: 07/02/2014
Date Made Active in Reports: 09/18/2014
Number of Days to Update: 78

Source: Environmental Protection Agency
Telephone: (415) 495-8895
Last EDR Contact: 12/29/2014
Next Scheduled EDR Contact: 04/13/2015
Data Release Frequency: Quarterly

Federal RCRA generators list

RCRA-LQG: RCRA - Large Quantity Generators

RCRAInfo is EPA's comprehensive information system, providing access to data supporting the Resource Conservation and Recovery Act (RCRA) of 1976 and the Hazardous and Solid Waste Amendments (HSWA) of 1984. The database includes selective information on sites which generate, transport, store, treat and/or dispose of hazardous waste as defined by the Resource Conservation and Recovery Act (RCRA). Large quantity generators (LQGs) generate over 1,000 kilograms (kg) of hazardous waste, or over 1 kg of acutely hazardous waste per month.

Date of Government Version: 06/10/2014
Date Data Arrived at EDR: 07/02/2014
Date Made Active in Reports: 09/18/2014
Number of Days to Update: 78

Source: Environmental Protection Agency
Telephone: (415) 495-8895
Last EDR Contact: 12/29/2014
Next Scheduled EDR Contact: 04/13/2015
Data Release Frequency: Quarterly

RCRA-SQG: RCRA - Small Quantity Generators

RCRAInfo is EPA's comprehensive information system, providing access to data supporting the Resource Conservation and Recovery Act (RCRA) of 1976 and the Hazardous and Solid Waste Amendments (HSWA) of 1984. The database includes selective information on sites which generate, transport, store, treat and/or dispose of hazardous waste as defined by the Resource Conservation and Recovery Act (RCRA). Small quantity generators (SQGs) generate between 100 kg and 1,000 kg of hazardous waste per month.

Date of Government Version: 06/10/2014
Date Data Arrived at EDR: 07/02/2014
Date Made Active in Reports: 09/18/2014
Number of Days to Update: 78

Source: Environmental Protection Agency
Telephone: (415) 495-8895
Last EDR Contact: 12/29/2014
Next Scheduled EDR Contact: 04/13/2015
Data Release Frequency: Quarterly

RCRA-CESQG: RCRA - Conditionally Exempt Small Quantity Generators

RCRAInfo is EPA's comprehensive information system, providing access to data supporting the Resource Conservation and Recovery Act (RCRA) of 1976 and the Hazardous and Solid Waste Amendments (HSWA) of 1984. The database includes selective information on sites which generate, transport, store, treat and/or dispose of hazardous waste as defined by the Resource Conservation and Recovery Act (RCRA). Conditionally exempt small quantity generators (CESQGs) generate less than 100 kg of hazardous waste, or less than 1 kg of acutely hazardous waste per month.

Date of Government Version: 06/10/2014
Date Data Arrived at EDR: 07/02/2014
Date Made Active in Reports: 09/18/2014
Number of Days to Update: 78

Source: Environmental Protection Agency
Telephone: (415) 495-8895
Last EDR Contact: 12/29/2014
Next Scheduled EDR Contact: 04/13/2015
Data Release Frequency: Varies

Federal institutional controls / engineering controls registries

US ENG CONTROLS: Engineering Controls Sites List

A listing of sites with engineering controls in place. Engineering controls include various forms of caps, building foundations, liners, and treatment methods to create pathway elimination for regulated substances to enter environmental media or effect human health.

Date of Government Version: 09/18/2014
Date Data Arrived at EDR: 09/19/2014
Date Made Active in Reports: 10/20/2014
Number of Days to Update: 31

Source: Environmental Protection Agency
Telephone: 703-603-0695
Last EDR Contact: 12/03/2014
Next Scheduled EDR Contact: 03/16/2015
Data Release Frequency: Varies

US INST CONTROL: Sites with Institutional Controls

A listing of sites with institutional controls in place. Institutional controls include administrative measures, such as groundwater use restrictions, construction restrictions, property use restrictions, and post remediation care requirements intended to prevent exposure to contaminants remaining on site. Deed restrictions are generally required as part of the institutional controls.

Date of Government Version: 09/18/2014
Date Data Arrived at EDR: 09/19/2014
Date Made Active in Reports: 10/20/2014
Number of Days to Update: 31

Source: Environmental Protection Agency
Telephone: 703-603-0695
Last EDR Contact: 12/03/2014
Next Scheduled EDR Contact: 03/16/2015
Data Release Frequency: Varies

LUCIS: Land Use Control Information System

LUCIS contains records of land use control information pertaining to the former Navy Base Realignment and Closure properties.

Date of Government Version: 08/29/2014
Date Data Arrived at EDR: 10/09/2014
Date Made Active in Reports: 10/20/2014
Number of Days to Update: 11

Source: Department of the Navy
Telephone: 843-820-7326
Last EDR Contact: 11/17/2014
Next Scheduled EDR Contact: 03/02/2015
Data Release Frequency: Varies

Federal ERNS list

ERNS: Emergency Response Notification System

Emergency Response Notification System. ERNS records and stores information on reported releases of oil and hazardous substances.

Date of Government Version: 09/29/2014
Date Data Arrived at EDR: 09/30/2014
Date Made Active in Reports: 11/06/2014
Number of Days to Update: 37

Source: National Response Center, United States Coast Guard
Telephone: 202-267-2180
Last EDR Contact: 12/29/2014
Next Scheduled EDR Contact: 04/13/2015
Data Release Frequency: Annually

State- and tribal - equivalent NPL

RESPONSE: State Response Sites

Identifies confirmed release sites where DTSC is involved in remediation, either in a lead or oversight capacity. These confirmed release sites are generally high-priority and high potential risk.

Date of Government Version: 11/03/2014
Date Data Arrived at EDR: 11/04/2014
Date Made Active in Reports: 12/12/2014
Number of Days to Update: 38

Source: Department of Toxic Substances Control
Telephone: 916-323-3400
Last EDR Contact: 11/04/2014
Next Scheduled EDR Contact: 02/16/2015
Data Release Frequency: Quarterly

State- and tribal - equivalent CERCLIS

ENVIROSTOR: EnviroStor Database

The Department of Toxic Substances Control's (DTSC's) Site Mitigation and Brownfields Reuse Program's (SMBRP's) EnviroStor database identifes sites that have known contamination or sites for which there may be reasons to investigate further. The database includes the following site types: Federal Superfund sites (National Priorities List (NPL)); State Response, including Military Facilities and State Superfund; Voluntary Cleanup; and School sites. EnviroStor provides similar information to the information that was available in CalSites, and provides additional site information, including, but not limited to, identification of formerly-contaminated properties that have been released for reuse, properties where environmental deed restrictions have been recorded to prevent inappropriate land uses, and risk characterization information that is used to assess potential impacts to public health and the environment at contaminated sites.

Date of Government Version: 11/03/2014
Date Data Arrived at EDR: 11/04/2014
Date Made Active in Reports: 12/12/2014
Number of Days to Update: 38

Source: Department of Toxic Substances Control
Telephone: 916-323-3400
Last EDR Contact: 11/04/2014
Next Scheduled EDR Contact: 02/16/2015
Data Release Frequency: Quarterly

State and tribal landfill and/or solid waste disposal site lists

SWF/LF (SWIS): Solid Waste Information System

Active, Closed and Inactive Landfills. SWF/LF records typically contain an inve ntory of solid waste disposal facilities or landfills. These may be active or i nactive facilities or open dumps that failed to meet RCRA Section 4004 criteria for solid waste landfills or disposal sites.

Date of Government Version: 11/17/2014
Date Data Arrived at EDR: 11/19/2014
Date Made Active in Reports: 12/24/2014
Number of Days to Update: 35

Source: Department of Resources Recycling and Recovery
Telephone: 916-341-6320
Last EDR Contact: 11/19/2014
Next Scheduled EDR Contact: 03/02/2015
Data Release Frequency: Quarterly

State and tribal leaking storage tank lists

LUST REG 4: Underground Storage Tank Leak List

Los Angeles, Ventura counties. For more current information, please refer to the State Water Resources Control Board's LUST database.

Date of Government Version: 09/07/2004
Date Data Arrived at EDR: 09/07/2004
Date Made Active in Reports: 10/12/2004
Number of Days to Update: 35

Source: California Regional Water Quality Control Board Los Angeles Region (4)
Telephone: 213-576-6710
Last EDR Contact: 09/06/2011
Next Scheduled EDR Contact: 12/19/2011
Data Release Frequency: No Update Planned

LUST REG 5: Leaking Underground Storage Tank Database

Leaking Underground Storage Tank locations. Alameda, Alpine, Amador, Butte, Colusa, Contra Costa, Calveras, El Dorado, Fresno, Glenn, Kern, Kings, Lake, Lassen, Madera, Mariposa, Merced, Modoc, Napa, Nevada, Placer, Plumas, Sacramento, San Joaquin, Shasta, Solano, Stanislaus, Sutter, Tehama, Tulare, Tuolumne, Yolo, Yuba counties.

Date of Government Version: 07/01/2008
Date Data Arrived at EDR: 07/22/2008
Date Made Active in Reports: 07/31/2008
Number of Days to Update: 9

Source: California Regional Water Quality Control Board Central Valley Region (5)
Telephone: 916-464-4834
Last EDR Contact: 07/01/2011
Next Scheduled EDR Contact: 10/17/2011
Data Release Frequency: No Update Planned

LUST REG 6L: Leaking Underground Storage Tank Case Listing

For more current information, please refer to the State Water Resources Control Board's LUST database.

Date of Government Version: 09/09/2003
Date Data Arrived at EDR: 09/10/2003
Date Made Active in Reports: 10/07/2003
Number of Days to Update: 27

Source: California Regional Water Quality Control Board Lahontan Region (6)
Telephone: 530-542-5572
Last EDR Contact: 09/12/2011
Next Scheduled EDR Contact: 12/26/2011
Data Release Frequency: No Update Planned

LUST REG 3: Leaking Underground Storage Tank Database
Leaking Underground Storage Tank locations. Monterey, San Benito, San Luis Obispo, Santa Barbara, Santa Cruz counties.

Date of Government Version: 05/19/2003
Date Data Arrived at EDR: 05/19/2003
Date Made Active in Reports: 06/02/2003
Number of Days to Update: 14

Source: California Regional Water Quality Control Board Central Coast Region (3)
Telephone: 805-542-4786
Last EDR Contact: 07/18/2011
Next Scheduled EDR Contact: 10/31/2011
Data Release Frequency: No Update Planned

LUST REG 2: Fuel Leak List
Leaking Underground Storage Tank locations. Alameda, Contra Costa, Marin, Napa, San Francisco, San Mateo, Santa Clara, Solano, Sonoma counties.

Date of Government Version: 09/30/2004
Date Data Arrived at EDR: 10/20/2004
Date Made Active in Reports: 11/19/2004
Number of Days to Update: 30

Source: California Regional Water Quality Control Board San Francisco Bay Region (2)
Telephone: 510-622-2433
Last EDR Contact: 09/19/2011
Next Scheduled EDR Contact: 01/02/2012
Data Release Frequency: Quarterly

LUST REG 1: Active Toxic Site Investigation
Del Norte, Humboldt, Lake, Mendocino, Modoc, Siskiyou, Sonoma, Trinity counties. For more current information, please refer to the State Water Resources Control Board's LUST database.

Date of Government Version: 02/01/2001
Date Data Arrived at EDR: 02/28/2001
Date Made Active in Reports: 03/29/2001
Number of Days to Update: 29

Source: California Regional Water Quality Control Board North Coast (1)
Telephone: 707-570-3769
Last EDR Contact: 08/01/2011
Next Scheduled EDR Contact: 11/14/2011
Data Release Frequency: No Update Planned

LUST REG 8: Leaking Underground Storage Tanks
California Regional Water Quality Control Board Santa Ana Region (8). For more current information, please refer to the State Water Resources Control Board's LUST database.

Date of Government Version: 02/14/2005
Date Data Arrived at EDR: 02/15/2005
Date Made Active in Reports: 03/28/2005
Number of Days to Update: 41

Source: California Regional Water Quality Control Board Santa Ana Region (8)
Telephone: 909-782-4496
Last EDR Contact: 08/15/2011
Next Scheduled EDR Contact: 11/28/2011
Data Release Frequency: Varies

LUST REG 9: Leaking Underground Storage Tank Report
Orange, Riverside, San Diego counties. For more current information, please refer to the State Water Resources Control Board's LUST database.

Date of Government Version: 03/01/2001
Date Data Arrived at EDR: 04/23/2001
Date Made Active in Reports: 05/21/2001
Number of Days to Update: 28

Source: California Regional Water Quality Control Board San Diego Region (9)
Telephone: 858-637-5595
Last EDR Contact: 09/26/2011
Next Scheduled EDR Contact: 01/09/2012
Data Release Frequency: No Update Planned

LUST: Geotracker's Leaking Underground Fuel Tank Report
Leaking Underground Storage Tank Incident Reports. LUST records contain an inventory of reported leaking underground storage tank incidents. Not all states maintain these records, and the information stored varies by state. For more information on a particular leaking underground storage tank sites, please contact the appropriate regulatory agency.

Date of Government Version: 12/12/2014
Date Data Arrived at EDR: 12/15/2014
Date Made Active in Reports: 01/05/2015
Number of Days to Update: 21

Source: State Water Resources Control Board
Telephone: see region list
Last EDR Contact: 12/15/2014
Next Scheduled EDR Contact: 03/30/2015
Data Release Frequency: Quarterly

LUST REG 7: Leaking Underground Storage Tank Case Listing
Leaking Underground Storage Tank locations. Imperial, Riverside, San Diego, Santa Barbara counties.

Date of Government Version: 02/26/2004
Date Data Arrived at EDR: 02/26/2004
Date Made Active in Reports: 03/24/2004
Number of Days to Update: 27

Source: California Regional Water Quality Control Board Colorado River Basin Region (7)
Telephone: 760-776-8943
Last EDR Contact: 08/01/2011
Next Scheduled EDR Contact: 11/14/2011
Data Release Frequency: No Update Planned

LUST REG 6V: Leaking Underground Storage Tank Case Listing
Leaking Underground Storage Tank locations. Inyo, Kern, Los Angeles, Mono, San Bernardino counties.

Date of Government Version: 06/07/2005
Date Data Arrived at EDR: 06/07/2005
Date Made Active in Reports: 06/29/2005
Number of Days to Update: 22

Source: California Regional Water Quality Control Board Victorville Branch Office (6)
Telephone: 760-241-7365
Last EDR Contact: 09/12/2011
Next Scheduled EDR Contact: 12/26/2011
Data Release Frequency: No Update Planned

SLIC: Statewide SLIC Cases
The SLIC (Spills, Leaks, Investigations and Cleanup) program is designed to protect and restore water quality from spills, leaks, and similar discharges.

Date of Government Version: 12/12/2014
Date Data Arrived at EDR: 12/15/2014
Date Made Active in Reports: 01/05/2015
Number of Days to Update: 21

Source: State Water Resources Control Board
Telephone: 866-480-1028
Last EDR Contact: 12/15/2014
Next Scheduled EDR Contact: 03/30/2015
Data Release Frequency: Varies

SLIC REG 1: Active Toxic Site Investigations
The SLIC (Spills, Leaks, Investigations and Cleanup) program is designed to protect and restore water quality from spills, leaks, and similar discharges.

Date of Government Version: 04/03/2003
Date Data Arrived at EDR: 04/07/2003
Date Made Active in Reports: 04/25/2003
Number of Days to Update: 18

Source: California Regional Water Quality Control Board, North Coast Region (1)
Telephone: 707-576-2220
Last EDR Contact: 08/01/2011
Next Scheduled EDR Contact: 11/14/2011
Data Release Frequency: No Update Planned

SLIC REG 2: Spills, Leaks, Investigation & Cleanup Cost Recovery Listing
The SLIC (Spills, Leaks, Investigations and Cleanup) program is designed to protect and restore water quality from spills, leaks, and similar discharges.

Date of Government Version: 09/30/2004
Date Data Arrived at EDR: 10/20/2004
Date Made Active in Reports: 11/19/2004
Number of Days to Update: 30

Source: Regional Water Quality Control Board San Francisco Bay Region (2)
Telephone: 510-286-0457
Last EDR Contact: 09/19/2011
Next Scheduled EDR Contact: 01/02/2012
Data Release Frequency: Quarterly

SLIC REG 3: Spills, Leaks, Investigation & Cleanup Cost Recovery Listing
The SLIC (Spills, Leaks, Investigations and Cleanup) program is designed to protect and restore water quality from spills, leaks, and similar discharges.

Date of Government Version: 05/18/2006
Date Data Arrived at EDR: 05/18/2006
Date Made Active in Reports: 06/15/2006
Number of Days to Update: 28

Source: California Regional Water Quality Control Board Central Coast Region (3)
Telephone: 805-549-3147
Last EDR Contact: 07/18/2011
Next Scheduled EDR Contact: 10/31/2011
Data Release Frequency: Semi-Annually

SLIC REG 4: Spills, Leaks, Investigation & Cleanup Cost Recovery Listing
The SLIC (Spills, Leaks, Investigations and Cleanup) program is designed to protect and restore water quality from spills, leaks, and similar discharges.

Date of Government Version: 11/17/2004
Date Data Arrived at EDR: 11/18/2004
Date Made Active in Reports: 01/04/2005
Number of Days to Update: 47

Source: Region Water Quality Control Board Los Angeles Region (4)
Telephone: 213-576-6600
Last EDR Contact: 07/01/2011
Next Scheduled EDR Contact: 10/17/2011
Data Release Frequency: Varies

SLIC REG 5: Spills, Leaks, Investigation & Cleanup Cost Recovery Listing
The SLIC (Spills, Leaks, Investigations and Cleanup) program is designed to protect and restore water quality from spills, leaks, and similar discharges.

Date of Government Version: 04/01/2005
Date Data Arrived at EDR: 04/05/2005
Date Made Active in Reports: 04/21/2005
Number of Days to Update: 16

Source: Regional Water Quality Control Board Central Valley Region (5)
Telephone: 916-464-3291
Last EDR Contact: 09/12/2011
Next Scheduled EDR Contact: 12/26/2011
Data Release Frequency: Semi-Annually

SLIC REG 6V: Spills, Leaks, Investigation & Cleanup Cost Recovery Listing
The SLIC (Spills, Leaks, Investigations and Cleanup) program is designed to protect and restore water quality from spills, leaks, and similar discharges.

Date of Government Version: 05/24/2005
Date Data Arrived at EDR: 05/25/2005
Date Made Active in Reports: 06/16/2005
Number of Days to Update: 22

Source: Regional Water Quality Control Board, Victorville Branch
Telephone: 619-241-6583
Last EDR Contact: 08/15/2011
Next Scheduled EDR Contact: 11/28/2011
Data Release Frequency: Semi-Annually

SLIC REG 6L: SLIC Sites
The SLIC (Spills, Leaks, Investigations and Cleanup) program is designed to protect and restore water quality from spills, leaks, and similar discharges.

Date of Government Version: 09/07/2004
Date Data Arrived at EDR: 09/07/2004
Date Made Active in Reports: 10/12/2004
Number of Days to Update: 35

Source: California Regional Water Quality Control Board, Lahontan Region
Telephone: 530-542-5574
Last EDR Contact: 08/15/2011
Next Scheduled EDR Contact: 11/28/2011
Data Release Frequency: No Update Planned

SLIC REG 7: SLIC List
The SLIC (Spills, Leaks, Investigations and Cleanup) program is designed to protect and restore water quality from spills, leaks, and similar discharges.

Date of Government Version: 11/24/2004
Date Data Arrived at EDR: 11/29/2004
Date Made Active in Reports: 01/04/2005
Number of Days to Update: 36

Source: California Regional Quality Control Board, Colorado River Basin Region
Telephone: 760-346-7491
Last EDR Contact: 08/01/2011
Next Scheduled EDR Contact: 11/14/2011
Data Release Frequency: No Update Planned

SLIC REG 8: Spills, Leaks, Investigation & Cleanup Cost Recovery Listing
The SLIC (Spills, Leaks, Investigations and Cleanup) program is designed to protect and restore water quality from spills, leaks, and similar discharges.

Date of Government Version: 04/03/2008
Date Data Arrived at EDR: 04/03/2008
Date Made Active in Reports: 04/14/2008
Number of Days to Update: 11

Source: California Region Water Quality Control Board Santa Ana Region (8)
Telephone: 951-782-3298
Last EDR Contact: 09/12/2011
Next Scheduled EDR Contact: 12/26/2011
Data Release Frequency: Semi-Annually

SLIC REG 9: Spills, Leaks, Investigation & Cleanup Cost Recovery Listing
The SLIC (Spills, Leaks, Investigations and Cleanup) program is designed to protect and restore water quality from spills, leaks, and similar discharges.

Date of Government Version: 09/10/2007
Date Data Arrived at EDR: 09/11/2007
Date Made Active in Reports: 09/28/2007
Number of Days to Update: 17

Source: California Regional Water Quality Control Board San Diego Region (9)
Telephone: 858-467-2980
Last EDR Contact: 08/08/2011
Next Scheduled EDR Contact: 11/21/2011
Data Release Frequency: Annually

INDIAN LUST R10: Leaking Underground Storage Tanks on Indian Land
LUSTs on Indian land in Alaska, Idaho, Oregon and Washington.

Date of Government Version: 05/20/2014
Date Data Arrived at EDR: 06/10/2014
Date Made Active in Reports: 08/22/2014
Number of Days to Update: 73

Source: EPA Region 10
Telephone: 206-553-2857
Last EDR Contact: 10/27/2014
Next Scheduled EDR Contact: 02/09/2015
Data Release Frequency: Quarterly

INDIAN LUST R8: Leaking Underground Storage Tanks on Indian Land
LUSTs on Indian land in Colorado, Montana, North Dakota, South Dakota, Utah and Wyoming.

Date of Government Version: 11/04/2014
Date Data Arrived at EDR: 11/07/2014
Date Made Active in Reports: 11/17/2014
Number of Days to Update: 10

Source: EPA Region 8
Telephone: 303-312-6271
Last EDR Contact: 10/27/2014
Next Scheduled EDR Contact: 02/09/2015
Data Release Frequency: Quarterly

INDIAN LUST R7: Leaking Underground Storage Tanks on Indian Land
LUSTs on Indian land in Iowa, Kansas, and Nebraska

Date of Government Version: 05/22/2014
Date Data Arrived at EDR: 08/22/2014
Date Made Active in Reports: 09/18/2014
Number of Days to Update: 27

Source: EPA Region 7
Telephone: 913-551-7003
Last EDR Contact: 10/27/2014
Next Scheduled EDR Contact: 02/09/2015
Data Release Frequency: Varies

INDIAN LUST R6: Leaking Underground Storage Tanks on Indian Land
LUSTs on Indian land in New Mexico and Oklahoma.

Date of Government Version: 10/06/2014
Date Data Arrived at EDR: 10/29/2014
Date Made Active in Reports: 11/17/2014
Number of Days to Update: 19

Source: EPA Region 6
Telephone: 214-665-6597
Last EDR Contact: 10/27/2014
Next Scheduled EDR Contact: 02/09/2015
Data Release Frequency: Varies

INDIAN LUST R4: Leaking Underground Storage Tanks on Indian Land
LUSTs on Indian land in Florida, Mississippi and North Carolina.

Date of Government Version: 07/30/2014
Date Data Arrived at EDR: 08/12/2014
Date Made Active in Reports: 08/22/2014
Number of Days to Update: 10

Source: EPA Region 4
Telephone: 404-562-8677
Last EDR Contact: 10/27/2014
Next Scheduled EDR Contact: 02/09/2015
Data Release Frequency: Semi-Annually

INDIAN LUST R1: Leaking Underground Storage Tanks on Indian Land
A listing of leaking underground storage tank locations on Indian Land.

Date of Government Version: 02/01/2013
Date Data Arrived at EDR: 05/01/2013
Date Made Active in Reports: 11/01/2013
Number of Days to Update: 184

Source: EPA Region 1
Telephone: 617-918-1313
Last EDR Contact: 10/31/2014
Next Scheduled EDR Contact: 02/09/2015
Data Release Frequency: Varies

INDIAN LUST R5: Leaking Underground Storage Tanks on Indian Land
Leaking underground storage tanks located on Indian Land in Michigan, Minnesota and Wisconsin.

Date of Government Version: 11/03/2014
Date Data Arrived at EDR: 11/05/2014
Date Made Active in Reports: 11/17/2014
Number of Days to Update: 12

Source: EPA, Region 5
Telephone: 312-886-7439
Last EDR Contact: 10/27/2014
Next Scheduled EDR Contact: 02/09/2015
Data Release Frequency: Varies

INDIAN LUST R9: Leaking Underground Storage Tanks on Indian Land
LUSTs on Indian land in Arizona, California, New Mexico and Nevada

Date of Government Version: 03/01/2013
Date Data Arrived at EDR: 03/01/2013
Date Made Active in Reports: 04/12/2013
Number of Days to Update: 42

Source: Environmental Protection Agency
Telephone: 415-972-3372
Last EDR Contact: 12/09/2014
Next Scheduled EDR Contact: 02/09/2015
Data Release Frequency: Quarterly

State and tribal registered storage tank lists

UST: Active UST Facilities
Active UST facilities gathered from the local regulatory agencies

Date of Government Version: 09/17/2014
Date Data Arrived at EDR: 09/17/2014
Date Made Active in Reports: 10/24/2014
Number of Days to Update: 37

Source: SWRCB
Telephone: 916-341-5851
Last EDR Contact: 12/15/2014
Next Scheduled EDR Contact: 03/30/2015
Data Release Frequency: Semi-Annually

AST: Aboveground Petroleum Storage Tank Facilities
A listing of aboveground storage tank petroleum storage tank locations.

Date of Government Version: 08/01/2009
Date Data Arrived at EDR: 09/10/2009
Date Made Active in Reports: 10/01/2009
Number of Days to Update: 21

Source: California Environmental Protection Agency
Telephone: 916-327-5092
Last EDR Contact: 12/23/2014
Next Scheduled EDR Contact: 04/13/2015
Data Release Frequency: Quarterly

INDIAN UST R7: Underground Storage Tanks on Indian Land
The Indian Underground Storage Tank (UST) database provides information about underground storage tanks on Indian land in EPA Region 7 (Iowa, Kansas, Missouri, Nebraska, and 9 Tribal Nations).

Date of Government Version: 08/20/2014
Date Data Arrived at EDR: 08/22/2014
Date Made Active in Reports: 09/18/2014
Number of Days to Update: 27

Source: EPA Region 7
Telephone: 913-551-7003
Last EDR Contact: 10/27/2014
Next Scheduled EDR Contact: 02/09/2015
Data Release Frequency: Varies

INDIAN UST R10: Underground Storage Tanks on Indian Land
The Indian Underground Storage Tank (UST) database provides information about underground storage tanks on Indian land in EPA Region 10 (Alaska, Idaho, Oregon, Washington, and Tribal Nations).

Date of Government Version: 05/20/2014
Date Data Arrived at EDR: 06/10/2014
Date Made Active in Reports: 08/15/2014
Number of Days to Update: 66

Source: EPA Region 10
Telephone: 206-553-2857
Last EDR Contact: 10/27/2014
Next Scheduled EDR Contact: 02/09/2015
Data Release Frequency: Quarterly

INDIAN UST R9: Underground Storage Tanks on Indian Land
The Indian Underground Storage Tank (UST) database provides information about underground storage tanks on Indian land in EPA Region 9 (Arizona, California, Hawaii, Nevada, the Pacific Islands, and Tribal Nations).

Date of Government Version: 08/14/2014
Date Data Arrived at EDR: 08/15/2014
Date Made Active in Reports: 08/22/2014
Number of Days to Update: 7

Source: EPA Region 9
Telephone: 415-972-3368
Last EDR Contact: 10/27/2014
Next Scheduled EDR Contact: 02/09/2015
Data Release Frequency: Quarterly

INDIAN UST R8: Underground Storage Tanks on Indian Land

The Indian Underground Storage Tank (UST) database provides information about underground storage tanks on Indian land in EPA Region 8 (Colorado, Montana, North Dakota, South Dakota, Utah, Wyoming and 27 Tribal Nations).

Date of Government Version: 11/04/2014
Date Data Arrived at EDR: 11/07/2014
Date Made Active in Reports: 11/17/2014
Number of Days to Update: 10

Source: EPA Region 8
Telephone: 303-312-6137
Last EDR Contact: 10/27/2014
Next Scheduled EDR Contact: 02/09/2015
Data Release Frequency: Quarterly

INDIAN UST R4: Underground Storage Tanks on Indian Land

The Indian Underground Storage Tank (UST) database provides information about underground storage tanks on Indian land in EPA Region 4 (Alabama, Florida, Georgia, Kentucky, Mississippi, North Carolina, South Carolina, Tennessee and Tribal Nations)

Date of Government Version: 07/30/2014
Date Data Arrived at EDR: 08/12/2014
Date Made Active in Reports: 08/22/2014
Number of Days to Update: 10

Source: EPA Region 4
Telephone: 404-562-9424
Last EDR Contact: 10/27/2014
Next Scheduled EDR Contact: 02/09/2015
Data Release Frequency: Semi-Annually

INDIAN UST R5: Underground Storage Tanks on Indian Land

The Indian Underground Storage Tank (UST) database provides information about underground storage tanks on Indian land in EPA Region 5 (Michigan, Minnesota and Wisconsin and Tribal Nations).

Date of Government Version: 11/03/2014
Date Data Arrived at EDR: 11/05/2014
Date Made Active in Reports: 11/17/2014
Number of Days to Update: 12

Source: EPA Region 5
Telephone: 312-886-6136
Last EDR Contact: 10/27/2014
Next Scheduled EDR Contact: 02/09/2015
Data Release Frequency: Varies

INDIAN UST R6: Underground Storage Tanks on Indian Land

The Indian Underground Storage Tank (UST) database provides information about underground storage tanks on Indian land in EPA Region 6 (Louisiana, Arkansas, Oklahoma, New Mexico, Texas and 65 Tribes).

Date of Government Version: 10/06/2014
Date Data Arrived at EDR: 10/29/2014
Date Made Active in Reports: 11/06/2014
Number of Days to Update: 8

Source: EPA Region 6
Telephone: 214-665-7591
Last EDR Contact: 10/27/2014
Next Scheduled EDR Contact: 02/09/2015
Data Release Frequency: Semi-Annually

INDIAN UST R1: Underground Storage Tanks on Indian Land

The Indian Underground Storage Tank (UST) database provides information about underground storage tanks on Indian land in EPA Region 1 (Connecticut, Maine, Massachusetts, New Hampshire, Rhode Island, Vermont and ten Tribal Nations).

Date of Government Version: 02/01/2013
Date Data Arrived at EDR: 05/01/2013
Date Made Active in Reports: 01/27/2014
Number of Days to Update: 271

Source: EPA, Region 1
Telephone: 617-918-1313
Last EDR Contact: 10/31/2014
Next Scheduled EDR Contact: 02/09/2015
Data Release Frequency: Varies

FEMA UST: Underground Storage Tank Listing

A listing of all FEMA owned underground storage tanks.

Date of Government Version: 01/01/2010
Date Data Arrived at EDR: 02/16/2010
Date Made Active in Reports: 04/12/2010
Number of Days to Update: 55

Source: FEMA
Telephone: 202-646-5797
Last EDR Contact: 01/12/2015
Next Scheduled EDR Contact: 04/27/2015
Data Release Frequency: Varies

State and tribal voluntary cleanup sites

INDIAN VCP R7: Voluntary Cleanup Priority Lisitng
A listing of voluntary cleanup priority sites located on Indian Land located in Region 7.

Date of Government Version: 03/20/2008
Date Data Arrived at EDR: 04/22/2008
Date Made Active in Reports: 05/19/2008
Number of Days to Update: 27

Source: EPA, Region 7
Telephone: 913-551-7365
Last EDR Contact: 04/20/2009
Next Scheduled EDR Contact: 07/20/2009
Data Release Frequency: Varies

INDIAN VCP R1: Voluntary Cleanup Priority Listing
A listing of voluntary cleanup priority sites located on Indian Land located in Region 1.

Date of Government Version: 09/29/2014
Date Data Arrived at EDR: 10/01/2014
Date Made Active in Reports: 11/06/2014
Number of Days to Update: 36

Source: EPA, Region 1
Telephone: 617-918-1102
Last EDR Contact: 12/31/2014
Next Scheduled EDR Contact: 04/13/2015
Data Release Frequency: Varies

VCP: Voluntary Cleanup Program Properties
Contains low threat level properties with either confirmed or unconfirmed releases and the project proponents have request that DTSC oversee investigation and/or cleanup activities and have agreed to provide coverage for DTSC's costs.

Date of Government Version: 11/03/2014
Date Data Arrived at EDR: 11/04/2014
Date Made Active in Reports: 12/12/2014
Number of Days to Update: 38

Source: Department of Toxic Substances Control
Telephone: 916-323-3400
Last EDR Contact: 11/04/2014
Next Scheduled EDR Contact: 02/16/2015
Data Release Frequency: Quarterly

ADDITIONAL ENVIRONMENTAL RECORDS

Local Brownfield lists

US BROWNFIELDS: A Listing of Brownfields Sites
Brownfields are real property, the expansion, redevelopment, or reuse of which may be complicated by the presence or potential presence of a hazardous substance, pollutant, or contaminant. Cleaning up and reinvesting in these properties takes development pressures off of undeveloped, open land, and both improves and protects the environment. Assessment, Cleanup and Redevelopment Exchange System (ACRES) stores information reported by EPA Brownfields grant recipients on brownfields properties assessed or cleaned up with grant funding as well as information on Targeted Brownfields Assessments performed by EPA Regions. A listing of ACRES Brownfield sites is obtained from Cleanups in My Community. Cleanups in My Community provides information on Brownfields properties for which information is reported back to EPA, as well as areas served by Brownfields grant programs.

Date of Government Version: 09/22/2014
Date Data Arrived at EDR: 09/23/2014
Date Made Active in Reports: 10/20/2014
Number of Days to Update: 27

Source: Environmental Protection Agency
Telephone: 202-566-2777
Last EDR Contact: 12/22/2014
Next Scheduled EDR Contact: 04/06/2015
Data Release Frequency: Semi-Annually

Local Lists of Landfill / Solid Waste Disposal Sites

ODI: Open Dump Inventory
An open dump is defined as a disposal facility that does not comply with one or more of the Part 257 or Part 258 Subtitle D Criteria.

Date of Government Version: 06/30/1985
Date Data Arrived at EDR: 08/09/2004
Date Made Active in Reports: 09/17/2004
Number of Days to Update: 39

Source: Environmental Protection Agency
Telephone: 800-424-9346
Last EDR Contact: 06/09/2004
Next Scheduled EDR Contact: N/A
Data Release Frequency: No Update Planned

DEBRIS REGION 9: Torres Martinez Reservation Illegal Dump Site Locations
A listing of illegal dump sites location on the Torres Martinez Indian Reservation located in eastern Riverside County and northern Imperial County, California.

Date of Government Version: 01/12/2009
Date Data Arrived at EDR: 05/07/2009
Date Made Active in Reports: 09/21/2009
Number of Days to Update: 137

Source: EPA, Region 9
Telephone: 415-947-4219
Last EDR Contact: 10/24/2014
Next Scheduled EDR Contact: 02/09/2015
Data Release Frequency: No Update Planned

SWRCY: Recycler Database
A listing of recycling facilities in California.

Date of Government Version: 09/16/2014
Date Data Arrived at EDR: 09/17/2014
Date Made Active in Reports: 10/23/2014
Number of Days to Update: 36

Source: Department of Conservation
Telephone: 916-323-3836
Last EDR Contact: 12/15/2014
Next Scheduled EDR Contact: 03/30/2015
Data Release Frequency: Quarterly

HAULERS: Registered Waste Tire Haulers Listing
A listing of registered waste tire haulers.

Date of Government Version: 09/08/2014
Date Data Arrived at EDR: 09/09/2014
Date Made Active in Reports: 10/22/2014
Number of Days to Update: 43

Source: Integrated Waste Management Board
Telephone: 916-341-6422
Last EDR Contact: 11/12/2014
Next Scheduled EDR Contact: 03/02/2015
Data Release Frequency: Varies

INDIAN ODI: Report on the Status of Open Dumps on Indian Lands
Location of open dumps on Indian land.

Date of Government Version: 12/31/1998
Date Data Arrived at EDR: 12/03/2007
Date Made Active in Reports: 01/24/2008
Number of Days to Update: 52

Source: Environmental Protection Agency
Telephone: 703-308-8245
Last EDR Contact: 10/29/2014
Next Scheduled EDR Contact: 02/16/2015
Data Release Frequency: Varies

WMUDS/SWAT: Waste Management Unit Database
Waste Management Unit Database System. WMUDS is used by the State Water Resources Control Board staff and the Regional Water Quality Control Boards for program tracking and inventory of waste management units. WMUDS is composed of the following databases: Facility Information, Scheduled Inspections Information, Waste Management Unit Information, SWAT Program Information, SWAT Report Summary Information, SWAT Report Summary Data, Chapter 15 (formerly Subchapter 15) Information, Chapter 15 Monitoring Parameters, TPCA Program Information, RCRA Program Information, Closure Information, and Interested Parties Information.

Date of Government Version: 04/01/2000
Date Data Arrived at EDR: 04/10/2000
Date Made Active in Reports: 05/10/2000
Number of Days to Update: 30

Source: State Water Resources Control Board
Telephone: 916-227-4448
Last EDR Contact: 11/05/2014
Next Scheduled EDR Contact: 02/23/2015
Data Release Frequency: No Update Planned

Local Lists of Hazardous waste / Contaminated Sites

US CDL: Clandestine Drug Labs

A listing of clandestine drug lab locations. The U.S. Department of Justice ("the Department") provides this web site as a public service. It contains addresses of some locations where law enforcement agencies reported they found chemicals or other items that indicated the presence of either clandestine drug laboratories or dumpsites. In most cases, the source of the entries is not the Department, and the Department has not verified the entry and does not guarantee its accuracy. Members of the public must verify the accuracy of all entries by, for example, contacting local law enforcement and local health departments.

Date of Government Version: 07/25/2014
Date Data Arrived at EDR: 09/09/2014
Date Made Active in Reports: 10/20/2014
Number of Days to Update: 41

Source: Drug Enforcement Administration
Telephone: 202-307-1000
Last EDR Contact: 11/25/2014
Next Scheduled EDR Contact: 03/16/2015
Data Release Frequency: Quarterly

HIST CAL-SITES: Calsites Database

The Calsites database contains potential or confirmed hazardous substance release properties. In 1996, California EPA reevaluated and significantly reduced the number of sites in the Calsites database. No longer updated by the state agency. It has been replaced by ENVIROSTOR.

Date of Government Version: 08/08/2005
Date Data Arrived at EDR: 08/03/2006
Date Made Active in Reports: 08/24/2006
Number of Days to Update: 21

Source: Department of Toxic Substance Control
Telephone: 916-323-3400
Last EDR Contact: 02/23/2009
Next Scheduled EDR Contact: 05/25/2009
Data Release Frequency: No Update Planned

SCH: School Property Evaluation Program

This category contains proposed and existing school sites that are being evaluated by DTSC for possible hazardous materials contamination. In some cases, these properties may be listed in the CalSites category depending on the level of threat to public health and safety or the environment they pose.

Date of Government Version: 11/03/2014
Date Data Arrived at EDR: 11/04/2014
Date Made Active in Reports: 12/12/2014
Number of Days to Update: 38

Source: Department of Toxic Substances Control
Telephone: 916-323-3400
Last EDR Contact: 11/04/2014
Next Scheduled EDR Contact: 02/16/2015
Data Release Frequency: Quarterly

TOXIC PITS: Toxic Pits Cleanup Act Sites

Toxic PITS Cleanup Act Sites. TOXIC PITS identifies sites suspected of containing hazardous substances where cleanup has not yet been completed.

Date of Government Version: 07/01/1995
Date Data Arrived at EDR: 08/30/1995
Date Made Active in Reports: 09/26/1995
Number of Days to Update: 27

Source: State Water Resources Control Board
Telephone: 916-227-4364
Last EDR Contact: 01/26/2009
Next Scheduled EDR Contact: 04/27/2009
Data Release Frequency: No Update Planned

CDL: Clandestine Drug Labs

A listing of drug lab locations. Listing of a location in this database does not indicate that any illegal drug lab materials were or were not present there, and does not constitute a determination that the location either requires or does not require additional cleanup work.

Date of Government Version: 06/30/2014
Date Data Arrived at EDR: 09/02/2014
Date Made Active in Reports: 09/24/2014
Number of Days to Update: 22

Source: Department of Toxic Substances Control
Telephone: 916-255-6504
Last EDR Contact: 01/12/2015
Next Scheduled EDR Contact: 04/27/2015
Data Release Frequency: Varies

US HIST CDL: National Clandestine Laboratory Register

A listing of clandestine drug lab locations. The U.S. Department of Justice ("the Department") provides this web site as a public service. It contains addresses of some locations where law enforcement agencies reported they found chemicals or other items that indicated the presence of either clandestine drug laboratories or dumpsites. In most cases, the source of the entries is not the Department, and the Department has not verified the entry and does not guarantee its accuracy. Members of the public must verify the accuracy of all entries by, for example, contacting local law enforcement and local health departments.

Date of Government Version: 07/25/2014
Date Data Arrived at EDR: 09/09/2014
Date Made Active in Reports: 10/20/2014
Number of Days to Update: 41

Source: Drug Enforcement Administration
Telephone: 202-307-1000
Last EDR Contact: 11/25/2014
Next Scheduled EDR Contact: 03/16/2015
Data Release Frequency: No Update Planned

Local Lists of Registered Storage Tanks

CA FID UST: Facility Inventory Database

The Facility Inventory Database (FID) contains a historical listing of active and inactive underground storage tank locations from the State Water Resource Control Board. Refer to local/county source for current data.

Date of Government Version: 10/31/1994
Date Data Arrived at EDR: 09/05/1995
Date Made Active in Reports: 09/29/1995
Number of Days to Update: 24

Source: California Environmental Protection Agency
Telephone: 916-341-5851
Last EDR Contact: 12/28/1998
Next Scheduled EDR Contact: N/A
Data Release Frequency: No Update Planned

UST MENDOCINO: Mendocino County UST Database

A listing of underground storage tank locations in Mendocino County.

Date of Government Version: 09/23/2009
Date Data Arrived at EDR: 09/23/2009
Date Made Active in Reports: 10/01/2009
Number of Days to Update: 8

Source: Department of Public Health
Telephone: 707-463-4466
Last EDR Contact: 12/24/2014
Next Scheduled EDR Contact: 03/16/2015
Data Release Frequency: Annually

HIST UST: Hazardous Substance Storage Container Database

The Hazardous Substance Storage Container Database is a historical listing of UST sites. Refer to local/county source for current data.

Date of Government Version: 10/15/1990
Date Data Arrived at EDR: 01/25/1991
Date Made Active in Reports: 02/12/1991
Number of Days to Update: 18

Source: State Water Resources Control Board
Telephone: 916-341-5851
Last EDR Contact: 07/26/2001
Next Scheduled EDR Contact: N/A
Data Release Frequency: No Update Planned

SWEEPS UST: SWEEPS UST Listing

Statewide Environmental Evaluation and Planning System. This underground storage tank listing was updated and maintained by a company contacted by the SWRCB in the early 1990's. The listing is no longer updated or maintained. The local agency is the contact for more information on a site on the SWEEPS list.

Date of Government Version: 06/01/1994
Date Data Arrived at EDR: 07/07/2005
Date Made Active in Reports: 08/11/2005
Number of Days to Update: 35

Source: State Water Resources Control Board
Telephone: N/A
Last EDR Contact: 06/03/2005
Next Scheduled EDR Contact: N/A
Data Release Frequency: No Update Planned

Local Land Records

LIENS 2: CERCLA Lien Information

A Federal CERCLA ('Superfund') lien can exist by operation of law at any site or property at which EPA has spent Superfund monies. These monies are spent to investigate and address releases and threatened releases of contamination. CERCLIS provides information as to the identity of these sites and properties.

Date of Government Version: 02/18/2014
Date Data Arrived at EDR: 03/18/2014
Date Made Active in Reports: 04/24/2014
Number of Days to Update: 37

Source: Environmental Protection Agency
Telephone: 202-564-6023
Last EDR Contact: 10/27/2014
Next Scheduled EDR Contact: 02/09/2015
Data Release Frequency: Varies

LIENS: Environmental Liens Listing

A listing of property locations with environmental liens for California where DTSC is a lien holder.

Date of Government Version: 10/02/2014
Date Data Arrived at EDR: 10/03/2014
Date Made Active in Reports: 11/20/2014
Number of Days to Update: 48

Source: Department of Toxic Substances Control
Telephone: 916-323-3400
Last EDR Contact: 12/05/2014
Next Scheduled EDR Contact: 03/23/2015
Data Release Frequency: Varies

DEED: Deed Restriction Listing

Site Mitigation and Brownfields Reuse Program Facility Sites with Deed Restrictions & Hazardous Waste Management Program Facility Sites with Deed / Land Use Restriction. The DTSC Site Mitigation and Brownfields Reuse Program (SMBRP) list includes sites cleaned up under the program's oversight and generally does not include current or former hazardous waste facilities that required a hazardous waste facility permit. The list represents deed restrictions that are active. Some sites have multiple deed restrictions. The DTSC Hazardous Waste Management Program (HWMP) has developed a list of current or former hazardous waste facilities that have a recorded land use restriction at the local county recorder's office. The land use restrictions on this list were required by the DTSC HWMP as a result of the presence of hazardous substances that remain on site after the facility (or part of the facility) has been closed or cleaned up. The types of land use restriction include deed notice, deed restriction, or a land use restriction that binds current and future owners.

Date of Government Version: 09/08/2014
Date Data Arrived at EDR: 09/10/2014
Date Made Active in Reports: 10/22/2014
Number of Days to Update: 42

Source: DTSC and SWRCB
Telephone: 916-323-3400
Last EDR Contact: 12/09/2014
Next Scheduled EDR Contact: 03/23/2015
Data Release Frequency: Semi-Annually

Records of Emergency Release Reports

HMIRS: Hazardous Materials Information Reporting System

Hazardous Materials Incident Report System. HMIRS contains hazardous material spill incidents reported to DOT.

Date of Government Version: 09/30/2014
Date Data Arrived at EDR: 10/01/2014
Date Made Active in Reports: 11/06/2014
Number of Days to Update: 36

Source: U.S. Department of Transportation
Telephone: 202-366-4555
Last EDR Contact: 12/30/2014
Next Scheduled EDR Contact: 04/13/2015
Data Release Frequency: Annually

CHMIRS: California Hazardous Material Incident Report System

California Hazardous Material Incident Reporting System. CHMIRS contains information on reported hazardous material incidents (accidental releases or spills).

Date of Government Version: 10/27/2014
Date Data Arrived at EDR: 10/29/2014
Date Made Active in Reports: 12/10/2014
Number of Days to Update: 42

Source: Office of Emergency Services
Telephone: 916-845-8400
Last EDR Contact: 10/29/2014
Next Scheduled EDR Contact: 02/09/2015
Data Release Frequency: Varies

LDS: Land Disposal Sites Listing

The Land Disposal program regulates of waste discharge to land for treatment, storage and disposal in waste management units.

Date of Government Version: 12/12/2014
Date Data Arrived at EDR: 12/15/2014
Date Made Active in Reports: 01/05/2015
Number of Days to Update: 21

Source: State Water Qualilty Control Board
Telephone: 866-480-1028
Last EDR Contact: 12/15/2014
Next Scheduled EDR Contact: 03/30/2015
Data Release Frequency: Quarterly

MCS: Military Cleanup Sites Listing

The State Water Resources Control Board and nine Regional Water Quality Control Boards partner with the Department of Defense (DoD) through the Defense and State Memorandum of Agreement (DSMOA) to oversee the investigation and remediation of water quality issues at military facilities.

Date of Government Version: 12/12/2014
Date Data Arrived at EDR: 12/15/2014
Date Made Active in Reports: 01/05/2015
Number of Days to Update: 21

Source: State Water Resources Control Board
Telephone: 866-480-1028
Last EDR Contact: 12/15/2014
Next Scheduled EDR Contact: 03/30/2015
Data Release Frequency: Quarterly

SPILLS 90: SPILLS90 data from FirstSearch

Spills 90 includes those spill and release records available exclusively from FirstSearch databases. Typically, they may include chemical, oil and/or hazardous substance spills recorded after 1990. Duplicate records that are already included in EDR incident and release records are not included in Spills 90.

Date of Government Version: 06/06/2012
Date Data Arrived at EDR: 01/03/2013
Date Made Active in Reports: 02/22/2013
Number of Days to Update: 50

Source: FirstSearch
Telephone: N/A
Last EDR Contact: 01/03/2013
Next Scheduled EDR Contact: N/A
Data Release Frequency: No Update Planned

Other Ascertainable Records

RCRA NonGen / NLR: RCRA - Non Generators

RCRAInfo is EPA's comprehensive information system, providing access to data supporting the Resource Conservation and Recovery Act (RCRA) of 1976 and the Hazardous and Solid Waste Amendments (HSWA) of 1984. The database includes selective information on sites which generate, transport, store, treat and/or dispose of hazardous waste as defined by the Resource Conservation and Recovery Act (RCRA). Non-Generators do not presently generate hazardous waste.

Date of Government Version: 06/10/2014
Date Data Arrived at EDR: 07/02/2014
Date Made Active in Reports: 09/18/2014
Number of Days to Update: 78

Source: Environmental Protection Agency
Telephone: (415) 495-8895
Last EDR Contact: 12/29/2014
Next Scheduled EDR Contact: 04/13/2015
Data Release Frequency: Varies

DOT OPS: Incident and Accident Data

Department of Transporation, Office of Pipeline Safety Incident and Accident data.

Date of Government Version: 07/31/2012
Date Data Arrived at EDR: 08/07/2012
Date Made Active in Reports: 09/18/2012
Number of Days to Update: 42

Source: Department of Transporation, Office of Pipeline Safety
Telephone: 202-366-4595
Last EDR Contact: 11/04/2014
Next Scheduled EDR Contact: 02/16/2015
Data Release Frequency: Varies

DOD: Department of Defense Sites

This data set consists of federally owned or administered lands, administered by the Department of Defense, that have any area equal to or greater than 640 acres of the United States, Puerto Rico, and the U.S. Virgin Islands.

Date of Government Version: 12/31/2005
Date Data Arrived at EDR: 11/10/2006
Date Made Active in Reports: 01/11/2007
Number of Days to Update: 62

Source: USGS
Telephone: 888-275-8747
Last EDR Contact: 01/15/2015
Next Scheduled EDR Contact: 04/27/2015
Data Release Frequency: Semi-Annually

FUDS: Formerly Used Defense Sites

The listing includes locations of Formerly Used Defense Sites properties where the US Army Corps of Engineers is actively working or will take necessary cleanup actions.

Date of Government Version: 06/06/2014
Date Data Arrived at EDR: 09/10/2014
Date Made Active in Reports: 09/18/2014
Number of Days to Update: 8

Source: U.S. Army Corps of Engineers
Telephone: 202-528-4285
Last EDR Contact: 12/12/2014
Next Scheduled EDR Contact: 03/23/2015
Data Release Frequency: Varies

CONSENT: Superfund (CERCLA) Consent Decrees

Major legal settlements that establish responsibility and standards for cleanup at NPL (Superfund) sites. Released periodically by United States District Courts after settlement by parties to litigation matters.

Date of Government Version: 12/31/2013
Date Data Arrived at EDR: 01/24/2014
Date Made Active in Reports: 02/24/2014
Number of Days to Update: 31

Source: Department of Justice, Consent Decree Library
Telephone: Varies
Last EDR Contact: 12/24/2014
Next Scheduled EDR Contact: 04/13/2015
Data Release Frequency: Varies

ROD: Records Of Decision

Record of Decision. ROD documents mandate a permanent remedy at an NPL (Superfund) site containing technical and health information to aid in the cleanup.

Date of Government Version: 11/25/2013
Date Data Arrived at EDR: 12/12/2013
Date Made Active in Reports: 02/24/2014
Number of Days to Update: 74

Source: EPA
Telephone: 703-416-0223
Last EDR Contact: 12/12/2014
Next Scheduled EDR Contact: 03/23/2015
Data Release Frequency: Annually

UMTRA: Uranium Mill Tailings Sites

Uranium ore was mined by private companies for federal government use in national defense programs. When the mills shut down, large piles of the sand-like material (mill tailings) remain after uranium has been extracted from the ore. Levels of human exposure to radioactive materials from the piles are low; however, in some cases tailings were used as construction materials before the potential health hazards of the tailings were recognized.

Date of Government Version: 09/14/2010
Date Data Arrived at EDR: 10/07/2011
Date Made Active in Reports: 03/01/2012
Number of Days to Update: 146

Source: Department of Energy
Telephone: 505-845-0011
Last EDR Contact: 11/26/2014
Next Scheduled EDR Contact: 03/09/2015
Data Release Frequency: Varies

US MINES: Mines Master Index File

Contains all mine identification numbers issued for mines active or opened since 1971. The data also includes violation information.

Date of Government Version: 08/05/2014
Date Data Arrived at EDR: 09/04/2014
Date Made Active in Reports: 11/17/2014
Number of Days to Update: 74

Source: Department of Labor, Mine Safety and Health Administration
Telephone: 303-231-5959
Last EDR Contact: 12/30/2014
Next Scheduled EDR Contact: 03/16/2015
Data Release Frequency: Semi-Annually

TRIS: Toxic Chemical Release Inventory System

Toxic Release Inventory System. TRIS identifies facilities which release toxic chemicals to the air, water and land in reportable quantities under SARA Title III Section 313.

Date of Government Version: 12/31/2011
Date Data Arrived at EDR: 07/31/2013
Date Made Active in Reports: 09/13/2013
Number of Days to Update: 44

Source: EPA
Telephone: 202-566-0250
Last EDR Contact: 11/26/2014
Next Scheduled EDR Contact: 03/09/2015
Data Release Frequency: Annually

TSCA: Toxic Substances Control Act

Toxic Substances Control Act. TSCA identifies manufacturers and importers of chemical substances included on the TSCA Chemical Substance Inventory list. It includes data on the production volume of these substances by plant site.

Date of Government Version: 12/31/2006
Date Data Arrived at EDR: 09/29/2010
Date Made Active in Reports: 12/02/2010
Number of Days to Update: 64

Source: EPA
Telephone: 202-260-5521
Last EDR Contact: 12/22/2014
Next Scheduled EDR Contact: 04/06/2015
Data Release Frequency: Every 4 Years

FTTS: FIFRA/ TSCA Tracking System - FIFRA (Federal Insecticide, Fungicide, & Rodenticide Act)/TSCA (Toxic Substances Control Act)
FTTS tracks administrative cases and pesticide enforcement actions and compliance activities related to FIFRA, TSCA and EPCRA (Emergency Planning and Community Right-to-Know Act). To maintain currency, EDR contacts the Agency on a quarterly basis.

Date of Government Version: 04/09/2009
Date Data Arrived at EDR: 04/16/2009
Date Made Active in Reports: 05/11/2009
Number of Days to Update: 25

Source: EPA/Office of Prevention, Pesticides and Toxic Substances
Telephone: 202-566-1667
Last EDR Contact: 11/19/2014
Next Scheduled EDR Contact: 03/09/2015
Data Release Frequency: Quarterly

FTTS INSP: FIFRA/ TSCA Tracking System - FIFRA (Federal Insecticide, Fungicide, & Rodenticide Act)/TSCA (Toxic Substances Control Act)
A listing of FIFRA/TSCA Tracking System (FTTS) inspections and enforcements.

Date of Government Version: 04/09/2009
Date Data Arrived at EDR: 04/16/2009
Date Made Active in Reports: 05/11/2009
Number of Days to Update: 25

Source: EPA
Telephone: 202-566-1667
Last EDR Contact: 11/19/2014
Next Scheduled EDR Contact: 03/09/2015
Data Release Frequency: Quarterly

HIST FTTS: FIFRA/TSCA Tracking System Administrative Case Listing
A complete administrative case listing from the FIFRA/TSCA Tracking System (FTTS) for all ten EPA regions. The information was obtained from the National Compliance Database (NCDB). NCDB supports the implementation of FIFRA (Federal Insecticide, Fungicide, and Rodenticide Act) and TSCA (Toxic Substances Control Act). Some EPA regions are now closing out records. Because of that, and the fact that some EPA regions are not providing EPA Headquarters with updated records, it was decided to create a HIST FTTS database. It included records that may not be included in the newer FTTS database updates. This database is no longer updated.

Date of Government Version: 10/19/2006
Date Data Arrived at EDR: 03/01/2007
Date Made Active in Reports: 04/10/2007
Number of Days to Update: 40

Source: Environmental Protection Agency
Telephone: 202-564-2501
Last EDR Contact: 12/17/2007
Next Scheduled EDR Contact: 03/17/2008
Data Release Frequency: No Update Planned

HIST FTTS INSP: FIFRA/TSCA Tracking System Inspection & Enforcement Case Listing
A complete inspection and enforcement case listing from the FIFRA/TSCA Tracking System (FTTS) for all ten EPA regions. The information was obtained from the National Compliance Database (NCDB). NCDB supports the implementation of FIFRA (Federal Insecticide, Fungicide, and Rodenticide Act) and TSCA (Toxic Substances Control Act). Some EPA regions are now closing out records. Because of that, and the fact that some EPA regions are not providing EPA Headquarters with updated records, it was decided to create a HIST FTTS database. It included records that may not be included in the newer FTTS database updates. This database is no longer updated.

Date of Government Version: 10/19/2006
Date Data Arrived at EDR: 03/01/2007
Date Made Active in Reports: 04/10/2007
Number of Days to Update: 40

Source: Environmental Protection Agency
Telephone: 202-564-2501
Last EDR Contact: 12/17/2008
Next Scheduled EDR Contact: 03/17/2008
Data Release Frequency: No Update Planned

SSTS: Section 7 Tracking Systems
Section 7 of the Federal Insecticide, Fungicide and Rodenticide Act, as amended (92 Stat. 829) requires all registered pesticide-producing establishments to submit a report to the Environmental Protection Agency by March 1st each year. Each establishment must report the types and amounts of pesticides, active ingredients and devices being produced, and those having been produced and sold or distributed in the past year.

Date of Government Version: 12/31/2009
Date Data Arrived at EDR: 12/10/2010
Date Made Active in Reports: 02/25/2011
Number of Days to Update: 77

Source: EPA
Telephone: 202-564-4203
Last EDR Contact: 10/27/2014
Next Scheduled EDR Contact: 02/09/2015
Data Release Frequency: Annually

ICIS: Integrated Compliance Information System

The Integrated Compliance Information System (ICIS) supports the information needs of the national enforcement and compliance program as well as the unique needs of the National Pollutant Discharge Elimination System (NPDES) program.

Date of Government Version: 07/31/2014
Date Data Arrived at EDR: 10/29/2014
Date Made Active in Reports: 11/06/2014
Number of Days to Update: 8

Source: Environmental Protection Agency
Telephone: 202-564-5088
Last EDR Contact: 01/09/2015
Next Scheduled EDR Contact: 04/27/2015
Data Release Frequency: Quarterly

PADS: PCB Activity Database System

PCB Activity Database. PADS Identifies generators, transporters, commercial storers and/or brokers and disposers of PCB's who are required to notify the EPA of such activities.

Date of Government Version: 07/01/2014
Date Data Arrived at EDR: 10/15/2014
Date Made Active in Reports: 11/17/2014
Number of Days to Update: 33

Source: EPA
Telephone: 202-566-0500
Last EDR Contact: 01/16/2015
Next Scheduled EDR Contact: 04/27/2015
Data Release Frequency: Annually

MLTS: Material Licensing Tracking System

MLTS is maintained by the Nuclear Regulatory Commission and contains a list of approximately 8,100 sites which possess or use radioactive materials and which are subject to NRC licensing requirements. To maintain currency, EDR contacts the Agency on a quarterly basis.

Date of Government Version: 07/22/2013
Date Data Arrived at EDR: 08/02/2013
Date Made Active in Reports: 11/01/2013
Number of Days to Update: 91

Source: Nuclear Regulatory Commission
Telephone: 301-415-7169
Last EDR Contact: 12/04/2014
Next Scheduled EDR Contact: 03/23/2015
Data Release Frequency: Quarterly

RADINFO: Radiation Information Database

The Radiation Information Database (RADINFO) contains information about facilities that are regulated by U.S. Environmental Protection Agency (EPA) regulations for radiation and radioactivity.

Date of Government Version: 10/07/2014
Date Data Arrived at EDR: 10/08/2014
Date Made Active in Reports: 10/20/2014
Number of Days to Update: 12

Source: Environmental Protection Agency
Telephone: 202-343-9775
Last EDR Contact: 01/08/2015
Next Scheduled EDR Contact: 04/20/2015
Data Release Frequency: Quarterly

FINDS: Facility Index System/Facility Registry System

Facility Index System. FINDS contains both facility information and 'pointers' to other sources that contain more detail. EDR includes the following FINDS databases in this report: PCS (Permit Compliance System), AIRS (Aerometric Information Retrieval System), DOCKET (Enforcement Docket used to manage and track information on civil judicial enforcement cases for all environmental statutes), FURS (Federal Underground Injection Control), C-DOCKET (Criminal Docket System used to track criminal enforcement actions for all environmental statutes), FFIS (Federal Facilities Information System), STATE (State Environmental Laws and Statutes), and PADS (PCB Activity Data System).

Date of Government Version: 08/16/2014
Date Data Arrived at EDR: 09/10/2014
Date Made Active in Reports: 10/20/2014
Number of Days to Update: 40

Source: EPA
Telephone: (415) 947-8000
Last EDR Contact: 12/09/2014
Next Scheduled EDR Contact: 03/23/2015
Data Release Frequency: Quarterly

RAATS: RCRA Administrative Action Tracking System

RCRA Administration Action Tracking System. RAATS contains records based on enforcement actions issued under RCRA pertaining to major violators and includes administrative and civil actions brought by the EPA. For administration actions after September 30, 1995, data entry in the RAATS database was discontinued. EPA will retain a copy of the database for historical records. It was necessary to terminate RAATS because a decrease in agency resources made it impossible to continue to update the information contained in the database.

Date of Government Version: 04/17/1995
Date Data Arrived at EDR: 07/03/1995
Date Made Active in Reports: 08/07/1995
Number of Days to Update: 35

Source: EPA
Telephone: 202-564-4104
Last EDR Contact: 06/02/2008
Next Scheduled EDR Contact: 09/01/2008
Data Release Frequency: No Update Planned

RMP: Risk Management Plans

When Congress passed the Clean Air Act Amendments of 1990, it required EPA to publish regulations and guidance for chemical accident prevention at facilities using extremely hazardous substances. The Risk Management Program Rule (RMP Rule) was written to implement Section 112(r) of these amendments. The rule, which built upon existing industry codes and standards, requires companies of all sizes that use certain flammable and toxic substances to develop a Risk Management Program, which includes a(n): Hazard assessment that details the potential effects of an accidental release, an accident history of the last five years, and an evaluation of worst-case and alternative accidental releases; Prevention program that includes safety precautions and maintenance, monitoring, and employee training measures; and Emergency response program that spells out emergency health care, employee training measures and procedures for informing the public and response agencies (e.g the fire department) should an accident occur.

Date of Government Version: 08/01/2014
Date Data Arrived at EDR: 08/12/2014
Date Made Active in Reports: 11/06/2014
Number of Days to Update: 86

Source: Environmental Protection Agency
Telephone: 202-564-8600
Last EDR Contact: 10/27/2014
Next Scheduled EDR Contact: 02/09/2015
Data Release Frequency: Varies

BRS: Biennial Reporting System

The Biennial Reporting System is a national system administered by the EPA that collects data on the generation and management of hazardous waste. BRS captures detailed data from two groups: Large Quantity Generators (LQG) and Treatment, Storage, and Disposal Facilities.

Date of Government Version: 12/31/2011
Date Data Arrived at EDR: 02/26/2013
Date Made Active in Reports: 04/19/2013
Number of Days to Update: 52

Source: EPA/NTIS
Telephone: 800-424-9346
Last EDR Contact: 11/26/2014
Next Scheduled EDR Contact: 03/09/2015
Data Release Frequency: Biennially

CA BOND EXP. PLAN: Bond Expenditure Plan

Department of Health Services developed a site-specific expenditure plan as the basis for an appropriation of Hazardous Substance Cleanup Bond Act funds. It is not updated.

Date of Government Version: 01/01/1989
Date Data Arrived at EDR: 07/27/1994
Date Made Active in Reports: 08/02/1994
Number of Days to Update: 6

Source: Department of Health Services
Telephone: 916-255-2118
Last EDR Contact: 05/31/1994
Next Scheduled EDR Contact: N/A
Data Release Frequency: No Update Planned

UIC: UIC Listing

A listing of wells identified as underground injection wells, in the California Oil and Gas Wells database.

Date of Government Version: 07/14/2014
Date Data Arrived at EDR: 09/17/2014
Date Made Active in Reports: 10/23/2014
Number of Days to Update: 36

Source: Deaprtment of Conservation
Telephone: 916-445-2408
Last EDR Contact: 12/15/2014
Next Scheduled EDR Contact: 03/30/2015
Data Release Frequency: Varies

NPDES: NPDES Permits Listing
A listing of NPDES permits, including stormwater.

Date of Government Version: 11/17/2014
Date Data Arrived at EDR: 11/19/2014
Date Made Active in Reports: 12/29/2014
Number of Days to Update: 40

Source: State Water Resources Control Board
Telephone: 916-445-9379
Last EDR Contact: 11/19/2014
Next Scheduled EDR Contact: 03/02/2015
Data Release Frequency: Quarterly

CORTESE: "Cortese" Hazardous Waste & Substances Sites List
The sites for the list are designated by the State Water Resource Control Board (LUST), the Integrated Waste Board (SWF/LS), and the Department of Toxic Substances Control (Cal-Sites).

Date of Government Version: 09/29/2014
Date Data Arrived at EDR: 09/30/2014
Date Made Active in Reports: 11/19/2014
Number of Days to Update: 50

Source: CAL EPA/Office of Emergency Information
Telephone: 916-323-3400
Last EDR Contact: 12/29/2014
Next Scheduled EDR Contact: 04/13/2015
Data Release Frequency: Quarterly

HIST CORTESE: Hazardous Waste & Substance Site List
The sites for the list are designated by the State Water Resource Control Board [LUST], the Integrated Waste Board [SWF/LS], and the Department of Toxic Substances Control [CALSITES]. This listing is no longer updated by the state agency.

Date of Government Version: 04/01/2001
Date Data Arrived at EDR: 01/22/2009
Date Made Active in Reports: 04/08/2009
Number of Days to Update: 76

Source: Department of Toxic Substances Control
Telephone: 916-323-3400
Last EDR Contact: 01/22/2009
Next Scheduled EDR Contact: N/A
Data Release Frequency: No Update Planned

NOTIFY 65: Proposition 65 Records
Listings of all Proposition 65 incidents reported to counties by the State Water Resources Control Board and the Regional Water Quality Control Board. This database is no longer updated by the reporting agency.

Date of Government Version: 10/21/1993
Date Data Arrived at EDR: 11/01/1993
Date Made Active in Reports: 11/19/1993
Number of Days to Update: 18

Source: State Water Resources Control Board
Telephone: 916-445-3846
Last EDR Contact: 12/18/2014
Next Scheduled EDR Contact: 04/06/2015
Data Release Frequency: No Update Planned

DRYCLEANERS: Cleaner Facilities
A list of drycleaner related facilities that have EPA ID numbers. These are facilities with certain SIC codes: power laundries, family and commercial; garment pressing and cleaner's agents; linen supply; coin-operated laundries and cleaning; drycleaning plants, except rugs; carpet and upholster cleaning; industrial launderers; laundry and garment services.

Date of Government Version: 06/28/2014
Date Data Arrived at EDR: 07/03/2014
Date Made Active in Reports: 08/21/2014
Number of Days to Update: 49

Source: Department of Toxic Substance Control
Telephone: 916-327-4498
Last EDR Contact: 12/22/2014
Next Scheduled EDR Contact: 03/23/2015
Data Release Frequency: Annually

WIP: Well Investigation Program Case List
Well Investigation Program case in the San Gabriel and San Fernando Valley area.

Date of Government Version: 07/03/2009
Date Data Arrived at EDR: 07/21/2009
Date Made Active in Reports: 08/03/2009
Number of Days to Update: 13

Source: Los Angeles Water Quality Control Board
Telephone: 213-576-6726
Last EDR Contact: 12/23/2014
Next Scheduled EDR Contact: 04/13/2015
Data Release Frequency: Varies

ENF: Enforcement Action Listing

A listing of Water Board Enforcement Actions. Formal is everything except Oral/Verbal Communication, Notice of Violation, Expedited Payment Letter, and Staff Enforcement Letter.

Date of Government Version: 11/10/2014
Date Data Arrived at EDR: 11/12/2014
Date Made Active in Reports: 12/12/2014
Number of Days to Update: 30

Source: State Water Resoruces Control Board
Telephone: 916-445-9379
Last EDR Contact: 11/07/2014
Next Scheduled EDR Contact: 02/09/2015
Data Release Frequency: Varies

HAZNET: Facility and Manifest Data

Facility and Manifest Data. The data is extracted from the copies of hazardous waste manifests received each year by the DTSC. The annual volume of manifests is typically 700,000 - 1,000,000 annually, representing approximately 350,000 - 500,000 shipments. Data are from the manifests submitted without correction, and therefore many contain some invalid values for data elements such as generator ID, TSD ID, waste category, and disposal method.

Date of Government Version: 12/31/2013
Date Data Arrived at EDR: 10/15/2014
Date Made Active in Reports: 11/19/2014
Number of Days to Update: 35

Source: California Environmental Protection Agency
Telephone: 916-255-1136
Last EDR Contact: 01/16/2015
Next Scheduled EDR Contact: 04/27/2015
Data Release Frequency: Annually

EMI: Emissions Inventory Data

Toxics and criteria pollutant emissions data collected by the ARB and local air pollution agencies.

Date of Government Version: 12/31/2012
Date Data Arrived at EDR: 03/25/2014
Date Made Active in Reports: 04/28/2014
Number of Days to Update: 34

Source: California Air Resources Board
Telephone: 916-322-2990
Last EDR Contact: 12/24/2014
Next Scheduled EDR Contact: 04/06/2015
Data Release Frequency: Varies

INDIAN RESERV: Indian Reservations

This map layer portrays Indian administered lands of the United States that have any area equal to or greater than 640 acres.

Date of Government Version: 12/31/2005
Date Data Arrived at EDR: 12/08/2006
Date Made Active in Reports: 01/11/2007
Number of Days to Update: 34

Source: USGS
Telephone: 202-208-3710
Last EDR Contact: 01/15/2015
Next Scheduled EDR Contact: 04/27/2015
Data Release Frequency: Semi-Annually

SCRD DRYCLEANERS: State Coalition for Remediation of Drycleaners Listing

The State Coalition for Remediation of Drycleaners was established in 1998, with support from the U.S. EPA Office of Superfund Remediation and Technology Innovation. It is comprised of representatives of states with established drycleaner remediation programs. Currently the member states are Alabama, Connecticut, Florida, Illinois, Kansas, Minnesota, Missouri, North Carolina, Oregon, South Carolina, Tennessee, Texas, and Wisconsin.

Date of Government Version: 03/07/2011
Date Data Arrived at EDR: 03/09/2011
Date Made Active in Reports: 05/02/2011
Number of Days to Update: 54

Source: Environmental Protection Agency
Telephone: 615-532-8599
Last EDR Contact: 11/18/2014
Next Scheduled EDR Contact: 02/02/2015
Data Release Frequency: Varies

HWP: EnviroStor Permitted Facilities Listing

Detailed information on permitted hazardous waste facilities and corrective action ("cleanups") tracked in EnviroStor.

Date of Government Version: 11/24/2014
Date Data Arrived at EDR: 11/25/2014
Date Made Active in Reports: 12/30/2014
Number of Days to Update: 35

Source: Department of Toxic Substances Control
Telephone: 916-323-3400
Last EDR Contact: 11/25/2014
Next Scheduled EDR Contact: 03/09/2015
Data Release Frequency: Quarterly

Financial Assurance 2: Financial Assurance Information Listing

A listing of financial assurance information for solid waste facilities. Financial assurance is intended to ensure that resources are available to pay for the cost of closure, post-closure care, and corrective measures if the owner or operator of a regulated facility is unable or unwilling to pay.

Date of Government Version: 11/17/2014
Date Data Arrived at EDR: 11/18/2014
Date Made Active in Reports: 12/29/2014
Number of Days to Update: 41

Source: California Integrated Waste Management Board
Telephone: 916-341-6066
Last EDR Contact: 11/26/2014
Next Scheduled EDR Contact: 03/02/2015
Data Release Frequency: Varies

PROC: Certified Processors Database

A listing of certified processors.

Date of Government Version: 09/16/2014
Date Data Arrived at EDR: 09/17/2014
Date Made Active in Reports: 10/23/2014
Number of Days to Update: 36

Source: Department of Conservation
Telephone: 916-323-3836
Last EDR Contact: 12/15/2014
Next Scheduled EDR Contact: 03/30/2015
Data Release Frequency: Quarterly

Financial Assurance 1: Financial Assurance Information Listing

Financial Assurance information

Date of Government Version: 10/28/2014
Date Data Arrived at EDR: 10/30/2014
Date Made Active in Reports: 12/10/2014
Number of Days to Update: 41

Source: Department of Toxic Substances Control
Telephone: 916-255-3628
Last EDR Contact: 10/27/2014
Next Scheduled EDR Contact: 02/09/2015
Data Release Frequency: Varies

PCB TRANSFORMER: PCB Transformer Registration Database

The database of PCB transformer registrations that includes all PCB registration submittals.

Date of Government Version: 02/01/2011
Date Data Arrived at EDR: 10/19/2011
Date Made Active in Reports: 01/10/2012
Number of Days to Update: 83

Source: Environmental Protection Agency
Telephone: 202-566-0517
Last EDR Contact: 10/31/2014
Next Scheduled EDR Contact: 02/09/2015
Data Release Frequency: Varies

EPA WATCH LIST: EPA WATCH LIST

EPA maintains a "Watch List" to facilitate dialogue between EPA, state and local environmental agencies on enforcement matters relating to facilities with alleged violations identified as either significant or high priority. Being on the Watch List does not mean that the facility has actually violated the law only that an investigation by EPA or a state or local environmental agency has led those organizations to allege that an unproven violation has in fact occurred. Being on the Watch List does not represent a higher level of concern regarding the alleged violations that were detected, but instead indicates cases requiring additional dialogue between EPA, state and local agencies - primarily because of the length of time the alleged violation has gone unaddressed or unresolved.

Date of Government Version: 08/30/2013
Date Data Arrived at EDR: 03/21/2014
Date Made Active in Reports: 06/17/2014
Number of Days to Update: 88

Source: Environmental Protection Agency
Telephone: 617-520-3000
Last EDR Contact: 11/14/2014
Next Scheduled EDR Contact: 02/23/2015
Data Release Frequency: Quarterly

HWT: Registered Hazardous Waste Transporter Database

A listing of hazardous waste transporters. In California, unless specifically exempted, it is unlawful for any person to transport hazardous wastes unless the person holds a valid registration issued by DTSC. A hazardous waste transporter registration is valid for one year and is assigned a unique registration number.

Date of Government Version: 10/14/2014
Date Data Arrived at EDR: 10/15/2014
Date Made Active in Reports: 11/19/2014
Number of Days to Update: 35

Source: Department of Toxic Substances Control
Telephone: 916-440-7145
Last EDR Contact: 01/13/2015
Next Scheduled EDR Contact: 04/27/2015
Data Release Frequency: Quarterly

US AIRS MINOR: Air Facility System Data
A listing of minor source facilities.

Date of Government Version: 10/16/2014
Date Data Arrived at EDR: 10/31/2014
Date Made Active in Reports: 11/17/2014
Number of Days to Update: 17

Source: EPA
Telephone: 202-564-2496
Last EDR Contact: 12/23/2014
Next Scheduled EDR Contact: 04/13/2015
Data Release Frequency: Annually

US AIRS (AFS): Aerometric Information Retrieval System Facility Subsystem (AFS)
The database is a sub-system of Aerometric Information Retrieval System (AIRS). AFS contains compliance data on air pollution point sources regulated by the U.S. EPA and/or state and local air regulatory agencies. This information comes from source reports by various stationary sources of air pollution, such as electric power plants, steel mills, factories, and universities, and provides information about the air pollutants they produce. Action, air program, air program pollutant, and general level plant data. It is used to track emissions and compliance data from industrial plants.

Date of Government Version: 10/16/2014
Date Data Arrived at EDR: 10/31/2014
Date Made Active in Reports: 11/17/2014
Number of Days to Update: 17

Source: EPA
Telephone: 202-564-2496
Last EDR Contact: 12/23/2014
Next Scheduled EDR Contact: 04/13/2015
Data Release Frequency: Annually

COAL ASH DOE: Sleam-Electric Plan Operation Data
A listing of power plants that store ash in surface ponds.

Date of Government Version: 12/31/2005
Date Data Arrived at EDR: 08/07/2009
Date Made Active in Reports: 10/22/2009
Number of Days to Update: 76

Source: Department of Energy
Telephone: 202-586-8719
Last EDR Contact: 01/15/2015
Next Scheduled EDR Contact: 04/27/2015
Data Release Frequency: Varies

MWMP: Medical Waste Management Program Listing
The Medical Waste Management Program (MWMP) ensures the proper handling and disposal of medical waste by permitting and inspecting medical waste Offsite Treatment Facilities (PDF) and Transfer Stations (PDF) throughout the state. MWMP also oversees all Medical Waste Transporters.

Date of Government Version: 08/20/2014
Date Data Arrived at EDR: 09/10/2014
Date Made Active in Reports: 10/23/2014
Number of Days to Update: 43

Source: Department of Public Health
Telephone: 916-558-1784
Last EDR Contact: 12/09/2014
Next Scheduled EDR Contact: 03/23/2015
Data Release Frequency: Varies

COAL ASH EPA: Coal Combustion Residues Surface Impoundments List
A listing of coal combustion residues surface impoundments with high hazard potential ratings.

Date of Government Version: 07/01/2014
Date Data Arrived at EDR: 09/10/2014
Date Made Active in Reports: 10/20/2014
Number of Days to Update: 40

Source: Environmental Protection Agency
Telephone: N/A
Last EDR Contact: 12/12/2014
Next Scheduled EDR Contact: 03/23/2015
Data Release Frequency: Varies

US FIN ASSUR: Financial Assurance Information
All owners and operators of facilities that treat, store, or dispose of hazardous waste are required to provide proof that they will have sufficient funds to pay for the clean up, closure, and post-closure care of their facilities.

Date of Government Version: 09/04/2014
Date Data Arrived at EDR: 09/04/2014
Date Made Active in Reports: 10/20/2014
Number of Days to Update: 46

Source: Environmental Protection Agency
Telephone: 202-566-1917
Last EDR Contact: 11/11/2014
Next Scheduled EDR Contact: 03/02/2015
Data Release Frequency: Quarterly

LEAD SMELTER 1: Lead Smelter Sites
A listing of former lead smelter site locations.

Date of Government Version: 06/04/2014
Date Data Arrived at EDR: 06/12/2014
Date Made Active in Reports: 07/28/2014
Number of Days to Update: 46

Source: Environmental Protection Agency
Telephone: 703-603-8787
Last EDR Contact: 01/05/2015
Next Scheduled EDR Contact: 04/20/2015
Data Release Frequency: Varies

LEAD SMELTER 2: Lead Smelter Sites
A list of several hundred sites in the U.S. where secondary lead smelting was done from 1931and 1964. These sites may pose a threat to public health through ingestion or inhalation of contaminated soil or dust

Date of Government Version: 04/05/2001
Date Data Arrived at EDR: 10/27/2010
Date Made Active in Reports: 12/02/2010
Number of Days to Update: 36

Source: American Journal of Public Health
Telephone: 703-305-6451
Last EDR Contact: 12/02/2009
Next Scheduled EDR Contact: N/A
Data Release Frequency: No Update Planned

PRP: Potentially Responsible Parties
A listing of verified Potentially Responsible Parties

Date of Government Version: 10/25/2013
Date Data Arrived at EDR: 10/17/2014
Date Made Active in Reports: 10/20/2014
Number of Days to Update: 3

Source: EPA
Telephone: 202-564-6023
Last EDR Contact: 12/29/2015
Next Scheduled EDR Contact: 04/13/2015
Data Release Frequency: Quarterly

WDS: Waste Discharge System
Sites which have been issued waste discharge requirements.

Date of Government Version: 06/19/2007
Date Data Arrived at EDR: 06/20/2007
Date Made Active in Reports: 06/29/2007
Number of Days to Update: 9

Source: State Water Resources Control Board
Telephone: 916-341-5227
Last EDR Contact: 11/19/2014
Next Scheduled EDR Contact: 03/09/2015
Data Release Frequency: Quarterly

FEDLAND: Federal and Indian Lands
Federally and Indian administrated lands of the United States. Lands included are administrated by: Army Corps of Engineers, Bureau of Reclamation, National Wild and Scenic River, National Wildlife Refuge, Public Domain Land, Wilderness, Wilderness Study Area, Wildlife Management Area, Bureau of Indian Affairs, Bureau of Land Management, Department of Justice, Forest Service, Fish and Wildlife Service, National Park Service.

Date of Government Version: 12/31/2005
Date Data Arrived at EDR: 02/06/2006
Date Made Active in Reports: 01/11/2007
Number of Days to Update: 339

Source: U.S. Geological Survey
Telephone: 888-275-8747
Last EDR Contact: 01/15/2015
Next Scheduled EDR Contact: 04/27/2015
Data Release Frequency: N/A

2020 COR ACTION: 2020 Corrective Action Program List
The EPA has set ambitious goals for the RCRA Corrective Action program by creating the 2020 Corrective Action Universe. This RCRA cleanup baseline includes facilities expected to need corrective action. The 2020 universe contains a wide variety of sites. Some properties are heavily contaminated while others were contaminated but have since been cleaned up. Still others have not been fully investigated yet, and may require little or no remediation. Inclusion in the 2020 Universe does not necessarily imply failure on the part of a facility to meet its RCRA obligations.

Date of Government Version: 11/11/2011
Date Data Arrived at EDR: 05/18/2012
Date Made Active in Reports: 05/25/2012
Number of Days to Update: 7

Source: Environmental Protection Agency
Telephone: 703-308-4044
Last EDR Contact: 11/14/2014
Next Scheduled EDR Contact: 02/23/2015
Data Release Frequency: Varies

EDR HIGH RISK HISTORICAL RECORDS

EDR Exclusive Records

EDR MGP: EDR Proprietary Manufactured Gas Plants

The EDR Proprietary Manufactured Gas Plant Database includes records of coal gas plants (manufactured gas plants) compiled by EDR's researchers. Manufactured gas sites were used in the United States from the 1800's to 1950's to produce a gas that could be distributed and used as fuel. These plants used whale oil, rosin, coal, or a mixture of coal, oil, and water that also produced a significant amount of waste. Many of the byproducts of the gas production, such as coal tar (oily waste containing volatile and non-volatile chemicals), sludges, oils and other compounds are potentially hazardous to human health and the environment. The byproduct from this process was frequently disposed of directly at the plant site and can remain or spread slowly, serving as a continuous source of soil and groundwater contamination.

Date of Government Version: N/A
Date Data Arrived at EDR: N/A
Date Made Active in Reports: N/A
Number of Days to Update: N/A

Source: EDR, Inc.
Telephone: N/A
Last EDR Contact: N/A
Next Scheduled EDR Contact: N/A
Data Release Frequency: No Update Planned

EDR US Hist Auto Stat: EDR Exclusive Historic Gas Stations

EDR has searched selected national collections of business directories and has collected listings of potential gas station/filling station/service station sites that were available to EDR researchers. EDR's review was limited to those categories of sources that might, in EDR's opinion, include gas station/filling station/service station establishments. The categories reviewed included, but were not limited to gas, gas station, gasoline station, filling station, auto, automobile repair, auto service station, service station, etc. This database falls within a category of information EDR classifies as "High Risk Historical Records", or HRHR. EDR's HRHR effort presents unique and sometimes proprietary data about past sites and operations that typically create environmental concerns, but may not show up in current government records searches.

Date of Government Version: N/A
Date Data Arrived at EDR: N/A
Date Made Active in Reports: N/A
Number of Days to Update: N/A

Source: EDR, Inc.
Telephone: N/A
Last EDR Contact: N/A
Next Scheduled EDR Contact: N/A
Data Release Frequency: Varies

EDR US Hist Cleaners: EDR Exclusive Historic Dry Cleaners

EDR has searched selected national collections of business directories and has collected listings of potential dry cleaner sites that were available to EDR researchers. EDR's review was limited to those categories of sources that might, in EDR's opinion, include dry cleaning establishments. The categories reviewed included, but were not limited to dry cleaners, cleaners, laundry, laundromat, cleaning/laundry, wash & dry etc. This database falls within a category of information EDR classifies as "High Risk Historical Records", or HRHR. EDR's HRHR effort presents unique and sometimes proprietary data about past sites and operations that typically create environmental concerns, but may not show up in current government records searches.

Date of Government Version: N/A
Date Data Arrived at EDR: N/A
Date Made Active in Reports: N/A
Number of Days to Update: N/A

Source: EDR, Inc.
Telephone: N/A
Last EDR Contact: N/A
Next Scheduled EDR Contact: N/A
Data Release Frequency: Varies

EDR RECOVERED GOVERNMENT ARCHIVES

Exclusive Recovered Govt. Archives

RGA LF: Recovered Government Archive Solid Waste Facilities List

The EDR Recovered Government Archive Landfill database provides a list of landfills derived from historical databases and includes many records that no longer appear in current government lists. Compiled from Records formerly available from the Department of Resources Recycling and Recovery in California.

Date of Government Version: N/A
Date Data Arrived at EDR: 07/01/2013
Date Made Active in Reports: 01/13/2014
Number of Days to Update: 196

Source: Department of Resources Recycling and Recovery
Telephone: N/A
Last EDR Contact: 06/01/2012
Next Scheduled EDR Contact: N/A
Data Release Frequency: Varies

RGA LUST: Recovered Government Archive Leaking Underground Storage Tank

The EDR Recovered Government Archive Leaking Underground Storage Tank database provides a list of LUST incidents derived from historical databases and includes many records that no longer appear in current government lists. Compiled from Records formerly available from the State Water Resources Control Board in California.

Date of Government Version: N/A
Date Data Arrived at EDR: 07/01/2013
Date Made Active in Reports: 12/30/2013
Number of Days to Update: 182

Source: State Water Resources Control Board
Telephone: N/A
Last EDR Contact: 06/01/2012
Next Scheduled EDR Contact: N/A
Data Release Frequency: Varies

COUNTY RECORDS

ALAMEDA COUNTY:

Contaminated Sites

A listing of contaminated sites overseen by the Toxic Release Program (oil and groundwater contamination from chemical releases and spills) and the Leaking Underground Storage Tank Program (soil and ground water contamination from leaking petroleum USTs).

Date of Government Version: 10/21/2014
Date Data Arrived at EDR: 11/07/2014
Date Made Active in Reports: 12/12/2014
Number of Days to Update: 35

Source: Alameda County Environmental Health Services
Telephone: 510-567-6700
Last EDR Contact: 12/29/2014
Next Scheduled EDR Contact: 04/13/2015
Data Release Frequency: Semi-Annually

Underground Tanks

Underground storage tank sites located in Alameda county.

Date of Government Version: 10/21/2014
Date Data Arrived at EDR: 11/07/2014
Date Made Active in Reports: 12/15/2014
Number of Days to Update: 38

Source: Alameda County Environmental Health Services
Telephone: 510-567-6700
Last EDR Contact: 12/29/2014
Next Scheduled EDR Contact: 04/13/2015
Data Release Frequency: Semi-Annually

AMADOR COUNTY:

CUPA Facility List

Cupa Facility List

Date of Government Version: 09/08/2014
Date Data Arrived at EDR: 09/09/2014
Date Made Active in Reports: 09/24/2014
Number of Days to Update: 15

Source: Amador County Environmental Health
Telephone: 209-223-6439
Last EDR Contact: 12/05/2014
Next Scheduled EDR Contact: 03/23/2015
Data Release Frequency: Varies

BUTTE COUNTY:

CUPA Facility Listing

Cupa facility list.

Date of Government Version: 11/20/2014
Date Data Arrived at EDR: 11/24/2014
Date Made Active in Reports: 01/07/2015
Number of Days to Update: 44

Source: Public Health Department
Telephone: 530-538-7149
Last EDR Contact: 01/12/2015
Next Scheduled EDR Contact: 04/27/2015
Data Release Frequency: No Update Planned

CALVERAS COUNTY:

CUPA Facility Listing
Cupa Facility Listing

Date of Government Version: 10/06/2014
Date Data Arrived at EDR: 10/07/2014
Date Made Active in Reports: 11/19/2014
Number of Days to Update: 43

Source: Calveras County Environmental Health
Telephone: 209-754-6399
Last EDR Contact: 01/12/2015
Next Scheduled EDR Contact: 04/13/2015
Data Release Frequency: Quarterly

COLUSA COUNTY:

CUPA Facility List
Cupa facility list.

Date of Government Version: 06/11/2014
Date Data Arrived at EDR: 06/13/2014
Date Made Active in Reports: 07/07/2014
Number of Days to Update: 24

Source: Health & Human Services
Telephone: 530-458-0396
Last EDR Contact: 11/07/2014
Next Scheduled EDR Contact: 02/23/2015
Data Release Frequency: Varies

CONTRA COSTA COUNTY:

Site List
List includes sites from the underground tank, hazardous waste generator and business plan/2185 programs.

Date of Government Version: 11/17/2014
Date Data Arrived at EDR: 11/19/2014
Date Made Active in Reports: 01/06/2015
Number of Days to Update: 48

Source: Contra Costa Health Services Department
Telephone: 925-646-2286
Last EDR Contact: 11/03/2014
Next Scheduled EDR Contact: 02/16/2015
Data Release Frequency: Semi-Annually

DEL NORTE COUNTY:

CUPA Facility List
Cupa Facility list

Date of Government Version: 11/03/2014
Date Data Arrived at EDR: 11/04/2014
Date Made Active in Reports: 12/12/2014
Number of Days to Update: 38

Source: Del Norte County Environmental Health Division
Telephone: 707-465-0426
Last EDR Contact: 11/03/2014
Next Scheduled EDR Contact: 02/16/2015
Data Release Frequency: Varies

EL DORADO COUNTY:

CUPA Facility List
CUPA facility list.

Date of Government Version: 11/19/2014
Date Data Arrived at EDR: 11/21/2014
Date Made Active in Reports: 12/29/2014
Number of Days to Update: 38

Source: El Dorado County Environmental Management Department
Telephone: 530-621-6623
Last EDR Contact: 11/03/2014
Next Scheduled EDR Contact: 02/16/2015
Data Release Frequency: Varies

FRESNO COUNTY:

CUPA Resources List

Certified Unified Program Agency. CUPA's are responsible for implementing a unified hazardous materials and hazardous waste management regulatory program. The agency provides oversight of businesses that deal with hazardous materials, operate underground storage tanks or aboveground storage tanks.

Date of Government Version: 09/30/2014
Date Data Arrived at EDR: 10/14/2014
Date Made Active in Reports: 11/19/2014
Number of Days to Update: 36

Source: Dept. of Community Health
Telephone: 559-445-3271
Last EDR Contact: 01/05/2015
Next Scheduled EDR Contact: 04/20/2015
Data Release Frequency: Semi-Annually

HUMBOLDT COUNTY:

CUPA Facility List

CUPA facility list.

Date of Government Version: 09/10/2014
Date Data Arrived at EDR: 09/11/2014
Date Made Active in Reports: 09/25/2014
Number of Days to Update: 14

Source: Humboldt County Environmental Health
Telephone: N/A
Last EDR Contact: 11/26/2014
Next Scheduled EDR Contact: 03/09/2015
Data Release Frequency: Varies

IMPERIAL COUNTY:

CUPA Facility List

Cupa facility list.

Date of Government Version: 11/03/2014
Date Data Arrived at EDR: 11/04/2014
Date Made Active in Reports: 12/12/2014
Number of Days to Update: 38

Source: San Diego Border Field Office
Telephone: 760-339-2777
Last EDR Contact: 10/27/2014
Next Scheduled EDR Contact: 02/09/2015
Data Release Frequency: Varies

INYO COUNTY:

CUPA Facility List

Cupa facility list.

Date of Government Version: 09/10/2013
Date Data Arrived at EDR: 09/11/2013
Date Made Active in Reports: 10/14/2013
Number of Days to Update: 33

Source: Inyo County Environmental Health Services
Telephone: 760-878-0238
Last EDR Contact: 11/19/2014
Next Scheduled EDR Contact: 03/09/2015
Data Release Frequency: Varies

KERN COUNTY:

Underground Storage Tank Sites & Tank Listing
Kern County Sites and Tanks Listing.

Date of Government Version: 07/22/2014
Date Data Arrived at EDR: 11/12/2014
Date Made Active in Reports: 12/19/2014
Number of Days to Update: 37

Source: Kern County Environment Health Services Department
Telephone: 661-862-8700
Last EDR Contact: 11/05/2014
Next Scheduled EDR Contact: 02/23/2015
Data Release Frequency: Quarterly

KINGS COUNTY:

CUPA Facility List
A listing of sites included in the county's Certified Unified Program Agency database. California's Secretary for Environmental Protection established the unified hazardous materials and hazardous waste regulatory program as required by chapter 6.11 of the California Health and Safety Code. The Unified Program consolidates the administration, permits, inspections, and enforcement activities.

Date of Government Version: 11/21/2014
Date Data Arrived at EDR: 11/25/2014
Date Made Active in Reports: 12/30/2014
Number of Days to Update: 35

Source: Kings County Department of Public Health
Telephone: 559-584-1411
Last EDR Contact: 11/21/2014
Next Scheduled EDR Contact: 03/09/2015
Data Release Frequency: Varies

LAKE COUNTY:

CUPA Facility List
Cupa facility list

Date of Government Version: 10/20/2014
Date Data Arrived at EDR: 10/21/2014
Date Made Active in Reports: 01/05/2015
Number of Days to Update: 76

Source: Lake County Environmental Health
Telephone: 707-263-1164
Last EDR Contact: 10/20/2014
Next Scheduled EDR Contact: 02/02/2015
Data Release Frequency: Varies

LOS ANGELES COUNTY:

San Gabriel Valley Areas of Concern
San Gabriel Valley areas where VOC contamination is at or above the MCL as designated by region 9 EPA office.

Date of Government Version: 03/30/2009
Date Data Arrived at EDR: 03/31/2009
Date Made Active in Reports: 10/23/2009
Number of Days to Update: 206

Source: EPA Region 9
Telephone: 415-972-3178
Last EDR Contact: 12/18/2014
Next Scheduled EDR Contact: 04/06/2015
Data Release Frequency: No Update Planned

HMS: Street Number List
Industrial Waste and Underground Storage Tank Sites.

Date of Government Version: 03/31/2014
Date Data Arrived at EDR: 06/06/2014
Date Made Active in Reports: 07/17/2014
Number of Days to Update: 41

Source: Department of Public Works
Telephone: 626-458-3517
Last EDR Contact: 01/12/2015
Next Scheduled EDR Contact: 04/27/2015
Data Release Frequency: Semi-Annually

List of Solid Waste Facilities
Solid Waste Facilities in Los Angeles County.

Date of Government Version: 10/20/2014
Date Data Arrived at EDR: 10/22/2014
Date Made Active in Reports: 12/12/2014
Number of Days to Update: 51

Source: La County Department of Public Works
Telephone: 818-458-5185
Last EDR Contact: 10/22/2014
Next Scheduled EDR Contact: 02/02/2015
Data Release Frequency: Varies

City of Los Angeles Landfills

Landfills owned and maintained by the City of Los Angeles.

Date of Government Version: 03/05/2009
Date Data Arrived at EDR: 03/10/2009
Date Made Active in Reports: 04/08/2009
Number of Days to Update: 29

Source: Engineering & Construction Division
Telephone: 213-473-7869
Last EDR Contact: 10/17/2014
Next Scheduled EDR Contact: 02/02/2015
Data Release Frequency: Varies

Site Mitigation List

Industrial sites that have had some sort of spill or complaint.

Date of Government Version: 01/07/2014
Date Data Arrived at EDR: 02/25/2014
Date Made Active in Reports: 03/25/2014
Number of Days to Update: 28

Source: Community Health Services
Telephone: 323-890-7806
Last EDR Contact: 10/17/2014
Next Scheduled EDR Contact: 02/02/2015
Data Release Frequency: Annually

City of El Segundo Underground Storage Tank

Underground storage tank sites located in El Segundo city.

Date of Government Version: 10/20/2014
Date Data Arrived at EDR: 10/22/2014
Date Made Active in Reports: 12/15/2014
Number of Days to Update: 54

Source: City of El Segundo Fire Department
Telephone: 310-524-2236
Last EDR Contact: 10/20/2014
Next Scheduled EDR Contact: 02/02/2015
Data Release Frequency: Semi-Annually

City of Long Beach Underground Storage Tank

Underground storage tank sites located in the city of Long Beach.

Date of Government Version: 07/28/2014
Date Data Arrived at EDR: 07/28/2014
Date Made Active in Reports: 08/20/2014
Number of Days to Update: 23

Source: City of Long Beach Fire Department
Telephone: 562-570-2563
Last EDR Contact: 10/27/2014
Next Scheduled EDR Contact: 02/09/2015
Data Release Frequency: Annually

City of Torrance Underground Storage Tank

Underground storage tank sites located in the city of Torrance.

Date of Government Version: 01/13/2014
Date Data Arrived at EDR: 03/27/2014
Date Made Active in Reports: 04/28/2014
Number of Days to Update: 32

Source: City of Torrance Fire Department
Telephone: 310-618-2973
Last EDR Contact: 01/12/2015
Next Scheduled EDR Contact: 04/27/2015
Data Release Frequency: Semi-Annually

MADERA COUNTY:

CUPA Facility List

A listing of sites included in the county's Certified Unified Program Agency database. California's Secretary for Environmental Protection established the unified hazardous materials and hazardous waste regulatory program as required by chapter 6.11 of the California Health and Safety Code. The Unified Program consolidates the administration, permits, inspections, and enforcement activities.

Date of Government Version: 10/02/2014
Date Data Arrived at EDR: 10/03/2014
Date Made Active in Reports: 11/20/2014
Number of Days to Update: 48

Source: Madera County Environmental Health
Telephone: 559-675-7823
Last EDR Contact: 11/26/2014
Next Scheduled EDR Contact: 03/09/2015
Data Release Frequency: Varies

MARIN COUNTY:

Underground Storage Tank Sites
Currently permitted USTs in Marin County.

Date of Government Version: 10/08/2014
Date Data Arrived at EDR: 10/22/2014
Date Made Active in Reports: 12/15/2014
Number of Days to Update: 54

Source: Public Works Department Waste Management
Telephone: 415-499-6647
Last EDR Contact: 01/05/2015
Next Scheduled EDR Contact: 04/20/2015
Data Release Frequency: Semi-Annually

MERCED COUNTY:

CUPA Facility List
CUPA facility list.

Date of Government Version: 11/25/2014
Date Data Arrived at EDR: 11/26/2014
Date Made Active in Reports: 12/29/2014
Number of Days to Update: 33

Source: Merced County Environmental Health
Telephone: 209-381-1094
Last EDR Contact: 11/21/2014
Next Scheduled EDR Contact: 03/09/2015
Data Release Frequency: Varies

MONO COUNTY:

CUPA Facility List
CUPA Facility List

Date of Government Version: 09/02/2014
Date Data Arrived at EDR: 09/05/2014
Date Made Active in Reports: 09/24/2014
Number of Days to Update: 19

Source: Mono County Health Department
Telephone: 760-932-5580
Last EDR Contact: 11/26/2014
Next Scheduled EDR Contact: 03/16/2015
Data Release Frequency: Varies

MONTEREY COUNTY:

CUPA Facility Listing
CUPA Program listing from the Environmental Health Division.

Date of Government Version: 06/09/2014
Date Data Arrived at EDR: 06/11/2014
Date Made Active in Reports: 07/09/2014
Number of Days to Update: 28

Source: Monterey County Health Department
Telephone: 831-796-1297
Last EDR Contact: 11/26/2014
Next Scheduled EDR Contact: 03/09/2015
Data Release Frequency: Varies

NAPA COUNTY:

Sites With Reported Contamination
A listing of leaking underground storage tank sites located in Napa county.

Date of Government Version: 12/05/2011
Date Data Arrived at EDR: 12/06/2011
Date Made Active in Reports: 02/07/2012
Number of Days to Update: 63

Source: Napa County Department of Environmental Management
Telephone: 707-253-4269
Last EDR Contact: 11/25/2014
Next Scheduled EDR Contact: 03/16/2015
Data Release Frequency: No Update Planned

Closed and Operating Underground Storage Tank Sites
Underground storage tank sites located in Napa county.

Date of Government Version: 01/15/2008
Date Data Arrived at EDR: 01/16/2008
Date Made Active in Reports: 02/08/2008
Number of Days to Update: 23

Source: Napa County Department of Environmental Management
Telephone: 707-253-4269
Last EDR Contact: 11/25/2014
Next Scheduled EDR Contact: 03/16/2015
Data Release Frequency: No Update Planned

NEVADA COUNTY:

CUPA Facility List
CUPA facility list.

Date of Government Version: 09/16/2014
Date Data Arrived at EDR: 09/18/2014
Date Made Active in Reports: 09/25/2014
Number of Days to Update: 7

Source: Community Development Agency
Telephone: 530-265-1467
Last EDR Contact: 12/15/2014
Next Scheduled EDR Contact: 02/16/2015
Data Release Frequency: Varies

ORANGE COUNTY:

List of Industrial Site Cleanups
Petroleum and non-petroleum spills.

Date of Government Version: 11/01/2014
Date Data Arrived at EDR: 11/12/2014
Date Made Active in Reports: 12/12/2014
Number of Days to Update: 30

Source: Health Care Agency
Telephone: 714-834-3446
Last EDR Contact: 11/05/2014
Next Scheduled EDR Contact: 02/23/2015
Data Release Frequency: Annually

List of Underground Storage Tank Cleanups
Orange County Underground Storage Tank Cleanups (LUST).

Date of Government Version: 11/01/2014
Date Data Arrived at EDR: 11/12/2014
Date Made Active in Reports: 12/12/2014
Number of Days to Update: 30

Source: Health Care Agency
Telephone: 714-834-3446
Last EDR Contact: 11/05/2014
Next Scheduled EDR Contact: 02/23/2015
Data Release Frequency: Quarterly

List of Underground Storage Tank Facilities
Orange County Underground Storage Tank Facilities (UST).

Date of Government Version: 11/01/2014
Date Data Arrived at EDR: 11/10/2014
Date Made Active in Reports: 12/15/2014
Number of Days to Update: 35

Source: Health Care Agency
Telephone: 714-834-3446
Last EDR Contact: 11/10/2014
Next Scheduled EDR Contact: 02/23/2015
Data Release Frequency: Quarterly

PLACER COUNTY:

Master List of Facilities
List includes aboveground tanks, underground tanks and cleanup sites.

Date of Government Version: 09/22/2014
Date Data Arrived at EDR: 09/23/2014
Date Made Active in Reports: 11/21/2014
Number of Days to Update: 59

Source: Placer County Health and Human Services
Telephone: 530-745-2363
Last EDR Contact: 12/05/2014
Next Scheduled EDR Contact: 03/23/2015
Data Release Frequency: Semi-Annually

RIVERSIDE COUNTY:

Listing of Underground Tank Cleanup Sites
Riverside County Underground Storage Tank Cleanup Sites (LUST).

Date of Government Version: 10/08/2014
Date Data Arrived at EDR: 10/10/2014
Date Made Active in Reports: 11/20/2014
Number of Days to Update: 41

Source: Department of Environmental Health
Telephone: 951-358-5055
Last EDR Contact: 12/22/2014
Next Scheduled EDR Contact: 01/05/2015
Data Release Frequency: Quarterly

Underground Storage Tank Tank List
Underground storage tank sites located in Riverside county.

Date of Government Version: 10/08/2014
Date Data Arrived at EDR: 10/10/2014
Date Made Active in Reports: 11/25/2014
Number of Days to Update: 46

Source: Department of Environmental Health
Telephone: 951-358-5055
Last EDR Contact: 12/22/2014
Next Scheduled EDR Contact: 04/06/2015
Data Release Frequency: Quarterly

SACRAMENTO COUNTY:

Toxic Site Clean-Up List
List of sites where unauthorized releases of potentially hazardous materials have occurred.

Date of Government Version: 02/06/2014
Date Data Arrived at EDR: 04/08/2014
Date Made Active in Reports: 04/29/2014
Number of Days to Update: 21

Source: Sacramento County Environmental Management
Telephone: 916-875-8406
Last EDR Contact: 01/07/2015
Next Scheduled EDR Contact: 04/20/2015
Data Release Frequency: Quarterly

Master Hazardous Materials Facility List
Any business that has hazardous materials on site - hazardous material storage sites, underground storage tanks, waste generators.

Date of Government Version: 10/21/2014
Date Data Arrived at EDR: 10/28/2014
Date Made Active in Reports: 12/15/2014
Number of Days to Update: 48

Source: Sacramento County Environmental Management
Telephone: 916-875-8406
Last EDR Contact: 01/05/2015
Next Scheduled EDR Contact: 04/20/2015
Data Release Frequency: Quarterly

SAN BERNARDINO COUNTY:

Hazardous Material Permits
This listing includes underground storage tanks, medical waste handlers/generators, hazardous materials handlers, hazardous waste generators, and waste oil generators/handlers.

Date of Government Version: 08/06/2014
Date Data Arrived at EDR: 08/07/2014
Date Made Active in Reports: 09/30/2014
Number of Days to Update: 54

Source: San Bernardino County Fire Department Hazardous Materials Division
Telephone: 909-387-3041
Last EDR Contact: 11/10/2014
Next Scheduled EDR Contact: 02/23/2015
Data Release Frequency: Quarterly

SAN DIEGO COUNTY:

Hazardous Materials Management Division Database

The database includes: HE58 - This report contains the business name, site address, business phone number, establishment 'H' permit number, type of permit, and the business status. HE17 - In addition to providing the same information provided in the HE58 listing, HE17 provides inspection dates, violations received by the establishment, hazardous waste generated, the quantity, method of storage, treatment/disposal of waste and the hauler, and information on underground storage tanks. Unauthorized Release List - Includes a summary of environmental contamination cases in San Diego County (underground tank cases, non-tank cases, groundwater contamination, and soil contamination are included.)

Date of Government Version: 09/23/2013
Date Data Arrived at EDR: 09/24/2013
Date Made Active in Reports: 10/17/2013
Number of Days to Update: 23

Source: Hazardous Materials Management Division
Telephone: 619-338-2268
Last EDR Contact: 12/04/2014
Next Scheduled EDR Contact: 03/23/2015
Data Release Frequency: Quarterly

Solid Waste Facilities

San Diego County Solid Waste Facilities.

Date of Government Version: 10/31/2014
Date Data Arrived at EDR: 11/21/2014
Date Made Active in Reports: 12/29/2014
Number of Days to Update: 38

Source: Department of Health Services
Telephone: 619-338-2209
Last EDR Contact: 10/27/2014
Next Scheduled EDR Contact: 02/09/2015
Data Release Frequency: Varies

Environmental Case Listing

The listing contains all underground tank release cases and projects pertaining to properties contaminated with hazardous substances that are actively under review by the Site Assessment and Mitigation Program.

Date of Government Version: 03/23/2010
Date Data Arrived at EDR: 06/15/2010
Date Made Active in Reports: 07/09/2010
Number of Days to Update: 24

Source: San Diego County Department of Environmental Health
Telephone: 619-338-2371
Last EDR Contact: 12/04/2014
Next Scheduled EDR Contact: 03/23/2015
Data Release Frequency: No Update Planned

SAN FRANCISCO COUNTY:

Local Oversite Facilities

A listing of leaking underground storage tank sites located in San Francisco county.

Date of Government Version: 09/19/2008
Date Data Arrived at EDR: 09/19/2008
Date Made Active in Reports: 09/29/2008
Number of Days to Update: 10

Source: Department Of Public Health San Francisco County
Telephone: 415-252-3920
Last EDR Contact: 11/05/2014
Next Scheduled EDR Contact: 02/23/2015
Data Release Frequency: Quarterly

Underground Storage Tank Information

Underground storage tank sites located in San Francisco county.

Date of Government Version: 11/29/2010
Date Data Arrived at EDR: 03/10/2011
Date Made Active in Reports: 03/15/2011
Number of Days to Update: 5

Source: Department of Public Health
Telephone: 415-252-3920
Last EDR Contact: 11/05/2014
Next Scheduled EDR Contact: 02/23/2015
Data Release Frequency: Quarterly

SAN JOAQUIN COUNTY:

San Joaquin Co. UST
A listing of underground storage tank locations in San Joaquin county.

Date of Government Version: 06/20/2014
Date Data Arrived at EDR: 06/23/2014
Date Made Active in Reports: 07/11/2014
Number of Days to Update: 18

Source: Environmental Health Department
Telephone: N/A
Last EDR Contact: 01/05/2015
Next Scheduled EDR Contact: 04/06/2015
Data Release Frequency: Semi-Annually

SAN LUIS OBISPO COUNTY:

CUPA Facility List
Cupa Facility List.

Date of Government Version: 11/21/2014
Date Data Arrived at EDR: 11/24/2014
Date Made Active in Reports: 12/30/2014
Number of Days to Update: 36

Source: San Luis Obispo County Public Health Department
Telephone: 805-781-5596
Last EDR Contact: 11/21/2014
Next Scheduled EDR Contact: 03/09/2015
Data Release Frequency: Varies

SAN MATEO COUNTY:

Business Inventory
List includes Hazardous Materials Business Plan, hazardous waste generators, and underground storage tanks.

Date of Government Version: 10/06/2014
Date Data Arrived at EDR: 10/10/2014
Date Made Active in Reports: 11/19/2014
Number of Days to Update: 40

Source: San Mateo County Environmental Health Services Division
Telephone: 650-363-1921
Last EDR Contact: 12/15/2014
Next Scheduled EDR Contact: 03/30/2015
Data Release Frequency: Annually

Fuel Leak List
A listing of leaking underground storage tank sites located in San Mateo county.

Date of Government Version: 09/15/2014
Date Data Arrived at EDR: 09/16/2014
Date Made Active in Reports: 10/22/2014
Number of Days to Update: 36

Source: San Mateo County Environmental Health Services Division
Telephone: 650-363-1921
Last EDR Contact: 12/11/2014
Next Scheduled EDR Contact: 03/30/2015
Data Release Frequency: Semi-Annually

SANTA BARBARA COUNTY:

CUPA Facility Listing
CUPA Program Listing from the Environmental Health Services division.

Date of Government Version: 09/08/2011
Date Data Arrived at EDR: 09/09/2011
Date Made Active in Reports: 10/07/2011
Number of Days to Update: 28

Source: Santa Barbara County Public Health Department
Telephone: 805-686-8167
Last EDR Contact: 11/19/2014
Next Scheduled EDR Contact: 03/09/2015
Data Release Frequency: Varies

SANTA CLARA COUNTY:

Cupa Facility List
Cupa facility list

Date of Government Version: 11/25/2014
Date Data Arrived at EDR: 11/26/2014
Date Made Active in Reports: 12/30/2014
Number of Days to Update: 34

Source: Department of Environmental Health
Telephone: 408-918-1973
Last EDR Contact: 11/21/2014
Next Scheduled EDR Contact: 03/09/2015
Data Release Frequency: Varies

HIST LUST - Fuel Leak Site Activity Report

A listing of open and closed leaking underground storage tanks. This listing is no longer updated by the county. Leaking underground storage tanks are now handled by the Department of Environmental Health.

Date of Government Version: 03/29/2005
Date Data Arrived at EDR: 03/30/2005
Date Made Active in Reports: 04/21/2005
Number of Days to Update: 22

Source: Santa Clara Valley Water District
Telephone: 408-265-2600
Last EDR Contact: 03/23/2009
Next Scheduled EDR Contact: 06/22/2009
Data Release Frequency: No Update Planned

LOP Listing

A listing of leaking underground storage tanks located in Santa Clara county.

Date of Government Version: 03/03/2014
Date Data Arrived at EDR: 03/05/2014
Date Made Active in Reports: 03/18/2014
Number of Days to Update: 13

Source: Department of Environmental Health
Telephone: 408-918-3417
Last EDR Contact: 11/25/2014
Next Scheduled EDR Contact: 03/16/2015
Data Release Frequency: Annually

Hazardous Material Facilities

Hazardous material facilities, including underground storage tank sites.

Date of Government Version: 11/10/2014
Date Data Arrived at EDR: 11/10/2014
Date Made Active in Reports: 12/15/2014
Number of Days to Update: 35

Source: City of San Jose Fire Department
Telephone: 408-535-7694
Last EDR Contact: 11/07/2014
Next Scheduled EDR Contact: 02/23/2015
Data Release Frequency: Annually

SANTA CRUZ COUNTY:

CUPA Facility List

CUPA facility listing.

Date of Government Version: 11/24/2014
Date Data Arrived at EDR: 11/25/2014
Date Made Active in Reports: 12/31/2014
Number of Days to Update: 36

Source: Santa Cruz County Environmental Health
Telephone: 831-464-2761
Last EDR Contact: 11/21/2014
Next Scheduled EDR Contact: 03/09/2015
Data Release Frequency: Varies

SHASTA COUNTY:

CUPA Facility List

Cupa Facility List.

Date of Government Version: 09/16/2014
Date Data Arrived at EDR: 09/18/2014
Date Made Active in Reports: 10/22/2014
Number of Days to Update: 34

Source: Shasta County Department of Resource Management
Telephone: 530-225-5789
Last EDR Contact: 11/26/2014
Next Scheduled EDR Contact: 03/09/2015
Data Release Frequency: Varies

SOLANO COUNTY:

Leaking Underground Storage Tanks
A listing of leaking underground storage tank sites located in Solano county.

Date of Government Version: 11/17/2014
Date Data Arrived at EDR: 11/24/2014
Date Made Active in Reports: 01/05/2015
Number of Days to Update: 42

Source: Solano County Department of Environmental Management
Telephone: 707-784-6770
Last EDR Contact: 12/11/2014
Next Scheduled EDR Contact: 03/30/2015
Data Release Frequency: Quarterly

Underground Storage Tanks
Underground storage tank sites located in Solano county.

Date of Government Version: 06/19/2014
Date Data Arrived at EDR: 06/26/2014
Date Made Active in Reports: 07/25/2014
Number of Days to Update: 29

Source: Solano County Department of Environmental Management
Telephone: 707-784-6770
Last EDR Contact: 12/11/2014
Next Scheduled EDR Contact: 03/30/2015
Data Release Frequency: Quarterly

SONOMA COUNTY:

Cupa Facility List
Cupa Facility list

Date of Government Version: 09/30/2014
Date Data Arrived at EDR: 10/02/2014
Date Made Active in Reports: 11/20/2014
Number of Days to Update: 49

Source: County of Sonoma Fire & Emergency Services Department
Telephone: 707-565-1174
Last EDR Contact: 12/29/2014
Next Scheduled EDR Contact: 04/13/2015
Data Release Frequency: Varies

Leaking Underground Storage Tank Sites
A listing of leaking underground storage tank sites located in Sonoma county.

Date of Government Version: 10/01/2014
Date Data Arrived at EDR: 10/03/2014
Date Made Active in Reports: 11/20/2014
Number of Days to Update: 48

Source: Department of Health Services
Telephone: 707-565-6565
Last EDR Contact: 12/29/2014
Next Scheduled EDR Contact: 04/13/2015
Data Release Frequency: Quarterly

SUTTER COUNTY:

Underground Storage Tanks
Underground storage tank sites located in Sutter county.

Date of Government Version: 09/08/2014
Date Data Arrived at EDR: 09/09/2014
Date Made Active in Reports: 10/24/2014
Number of Days to Update: 45

Source: Sutter County Department of Agriculture
Telephone: 530-822-7500
Last EDR Contact: 12/05/2014
Next Scheduled EDR Contact: 03/23/2015
Data Release Frequency: Semi-Annually

TUOLUMNE COUNTY:

CUPA Facility List
Cupa facility list

Date of Government Version: 10/28/2014
Date Data Arrived at EDR: 10/29/2014
Date Made Active in Reports: 12/12/2014
Number of Days to Update: 44

Source: Divison of Environmental Health
Telephone: 209-533-5633
Last EDR Contact: 10/27/2014
Next Scheduled EDR Contact: 02/09/2015
Data Release Frequency: Varies

VENTURA COUNTY:

Business Plan, Hazardous Waste Producers, and Operating Underground Tanks

The BWT list indicates by site address whether the Environmental Health Division has Business Plan (B), Waste Producer (W), and/or Underground Tank (T) information.

Date of Government Version: 10/29/2014
Date Data Arrived at EDR: 11/24/2014
Date Made Active in Reports: 12/29/2014
Number of Days to Update: 35

Source: Ventura County Environmental Health Division
Telephone: 805-654-2813
Last EDR Contact: 11/17/2014
Next Scheduled EDR Contact: 03/02/2015
Data Release Frequency: Quarterly

Inventory of Illegal Abandoned and Inactive Sites

Ventura County Inventory of Closed, Illegal Abandoned, and Inactive Sites.

Date of Government Version: 12/01/2011
Date Data Arrived at EDR: 12/01/2011
Date Made Active in Reports: 01/19/2012
Number of Days to Update: 49

Source: Environmental Health Division
Telephone: 805-654-2813
Last EDR Contact: 01/05/2015
Next Scheduled EDR Contact: 04/20/2015
Data Release Frequency: Annually

Listing of Underground Tank Cleanup Sites

Ventura County Underground Storage Tank Cleanup Sites (LUST).

Date of Government Version: 05/29/2008
Date Data Arrived at EDR: 06/24/2008
Date Made Active in Reports: 07/31/2008
Number of Days to Update: 37

Source: Environmental Health Division
Telephone: 805-654-2813
Last EDR Contact: 11/17/2014
Next Scheduled EDR Contact: 03/02/2015
Data Release Frequency: Quarterly

Medical Waste Program List

To protect public health and safety and the environment from potential exposure to disease causing agents, the Environmental Health Division Medical Waste Program regulates the generation, handling, storage, treatment and disposal of medical waste throughout the County.

Date of Government Version: 09/26/2014
Date Data Arrived at EDR: 10/29/2014
Date Made Active in Reports: 12/12/2014
Number of Days to Update: 44

Source: Ventura County Resource Management Agency
Telephone: 805-654-2813
Last EDR Contact: 10/27/2014
Next Scheduled EDR Contact: 02/09/2015
Data Release Frequency: Quarterly

Underground Tank Closed Sites List

Ventura County Operating Underground Storage Tank Sites (UST)/Underground Tank Closed Sites List.

Date of Government Version: 08/26/2014
Date Data Arrived at EDR: 09/17/2014
Date Made Active in Reports: 10/28/2014
Number of Days to Update: 41

Source: Environmental Health Division
Telephone: 805-654-2813
Last EDR Contact: 12/15/2014
Next Scheduled EDR Contact: 03/30/2015
Data Release Frequency: Quarterly

YOLO COUNTY:

Underground Storage Tank Comprehensive Facility Report

Underground storage tank sites located in Yolo county.

Date of Government Version: 09/23/2014
Date Data Arrived at EDR: 09/30/2014
Date Made Active in Reports: 11/25/2014
Number of Days to Update: 56

Source: Yolo County Department of Health
Telephone: 530-666-8646
Last EDR Contact: 12/18/2014
Next Scheduled EDR Contact: 04/06/2015
Data Release Frequency: Annually

YUBA COUNTY:

CUPA Facility List
CUPA facility listing for Yuba County.

Date of Government Version: 11/17/2014
Date Data Arrived at EDR: 11/18/2014
Date Made Active in Reports: 12/30/2014
Number of Days to Update: 42

Source: Yuba County Environmental Health Department
Telephone: 530-749-7523
Last EDR Contact: 11/17/2014
Next Scheduled EDR Contact: 02/16/2015
Data Release Frequency: Varies

OTHER DATABASE(S)

Depending on the geographic area covered by this report, the data provided in these specialty databases may or may not be complete. For example, the existence of wetlands information data in a specific report does not mean that all wetlands in the area covered by the report are included. Moreover, the absence of any reported wetlands information does not necessarily mean that wetlands do not exist in the area covered by the report.

CT MANIFEST: Hazardous Waste Manifest Data
Facility and manifest data. Manifest is a document that lists and tracks hazardous waste from the generator through transporters to a tsd facility.

Date of Government Version: 07/30/2013
Date Data Arrived at EDR: 08/19/2013
Date Made Active in Reports: 10/03/2013
Number of Days to Update: 45

Source: Department of Energy & Environmental Protection
Telephone: 860-424-3375
Last EDR Contact: 11/17/2014
Next Scheduled EDR Contact: 03/02/2015
Data Release Frequency: No Update Planned

NJ MANIFEST: Manifest Information
Hazardous waste manifest information.

Date of Government Version: 12/31/2011
Date Data Arrived at EDR: 07/19/2012
Date Made Active in Reports: 08/28/2012
Number of Days to Update: 40

Source: Department of Environmental Protection
Telephone: N/A
Last EDR Contact: 01/12/2015
Next Scheduled EDR Contact: 04/27/2015
Data Release Frequency: Annually

NY MANIFEST: Facility and Manifest Data
Manifest is a document that lists and tracks hazardous waste from the generator through transporters to a TSD facility.

Date of Government Version: 11/01/2014
Date Data Arrived at EDR: 11/05/2014
Date Made Active in Reports: 11/24/2014
Number of Days to Update: 19

Source: Department of Environmental Conservation
Telephone: 518-402-8651
Last EDR Contact: 11/05/2014
Next Scheduled EDR Contact: 02/16/2015
Data Release Frequency: Annually

PA MANIFEST: Manifest Information
Hazardous waste manifest information.

Date of Government Version: 12/31/2013
Date Data Arrived at EDR: 07/21/2014
Date Made Active in Reports: 08/25/2014
Number of Days to Update: 35

Source: Department of Environmental Protection
Telephone: 717-783-8990
Last EDR Contact: 10/20/2014
Next Scheduled EDR Contact: 02/02/2015
Data Release Frequency: Annually

RI MANIFEST: Manifest information
Hazardous waste manifest information

Date of Government Version: 12/31/2013
Date Data Arrived at EDR: 07/15/2014
Date Made Active in Reports: 08/13/2014
Number of Days to Update: 29

Source: Department of Environmental Management
Telephone: 401-222-2797
Last EDR Contact: 11/26/2014
Next Scheduled EDR Contact: 03/09/2015
Data Release Frequency: Annually

WI MANIFEST: Manifest Information
Hazardous waste manifest information.

Date of Government Version: 12/31/2013
Date Data Arrived at EDR: 06/20/2014
Date Made Active in Reports: 08/07/2014
Number of Days to Update: 48

Source: Department of Natural Resources
Telephone: N/A
Last EDR Contact: 12/12/2014
Next Scheduled EDR Contact: 03/30/2015
Data Release Frequency: Annually

Oil/Gas Pipelines: This data was obtained by EDR from the USGS in 1994. It is referred to by USGS as GeoData Digital Line Graphs from 1:100,000-Scale Maps. It was extracted from the transportation category including some oil, but primarily gas pipelines.

Sensitive Receptors: There are individuals deemed sensitive receptors due to their fragile immune systems and special sensitivity to environmental discharges. These sensitive receptors typically include the elderly, the sick, and children. While the location of all sensitive receptors cannot be determined, EDR indicates those buildings and facilities - schools, daycares, hospitals, medical centers, and nursing homes - where individuals who are sensitive receptors are likely to be located.

AHA Hospitals:
Source: American Hospital Association, Inc.
Telephone: 312-280-5991
The database includes a listing of hospitals based on the American Hospital Association's annual survey of hospitals.

Medical Centers: Provider of Services Listing
Source: Centers for Medicare & Medicaid Services
Telephone: 410-786-3000
A listing of hospitals with Medicare provider number, produced by Centers of Medicare & Medicaid Services, a federal agency within the U.S. Department of Health and Human Services.

Nursing Homes
Source: National Institutes of Health
Telephone: 301-594-6248
Information on Medicare and Medicaid certified nursing homes in the United States.

Public Schools
Source: National Center for Education Statistics
Telephone: 202-502-7300
The National Center for Education Statistics' primary database on elementary and secondary public education in the United States. It is a comprehensive, annual, national statistical database of all public elementary and secondary schools and school districts, which contains data that are comparable across all states.

Private Schools
Source: National Center for Education Statistics
Telephone: 202-502-7300
The National Center for Education Statistics' primary database on private school locations in the United States.

Daycare Centers: Licensed Facilities
Source: Department of Social Services
Telephone: 916-657-4041

Flood Zone Data: This data, available in select counties across the country, was obtained by EDR in 2003 & 2011 from the Federal Emergency Management Agency (FEMA). Data depicts 100-year and 500-year flood zones as defined by FEMA.

NWI: National Wetlands Inventory. This data, available in select counties across the country, was obtained by EDR in 2002, 2005 and 2010 from the U.S. Fish and Wildlife Service.

Scanned Digital USGS 7.5' Topographic Map (DRG)
Source: United States Geologic Survey
A digital raster graphic (DRG) is a scanned image of a U.S. Geological Survey topographic map. The map images are made by scanning published paper maps on high-resolution scanners. The raster image is georeferenced and fit to the Universal Transverse Mercator (UTM) projection.

STREET AND ADDRESS INFORMATION

© 2010 Tele Atlas North America, Inc. All rights reserved. This material is proprietary and the subject of copyright protection and other intellectual property rights owned by or licensed to Tele Atlas North America, Inc. The use of this material is subject to the terms of a license agreement. You will be held liable for any unauthorized copying or disclosure of this material.

GEOCHECK ®- PHYSICAL SETTING SOURCE ADDENDUM

TARGET PROPERTY ADDRESS

PACOIMA SPREADING GROUNDS LACFCD SITE
INTERSECTION OF DEVONSHIRE STREET & ARLETA AVE
MISSION HILLS, LOS A, CA 91345

TARGET PROPERTY COORDINATES

Latitude (North):	34.2563 - 34˚ 15’ 22.68’’
Longitude (West):	118.449 - 118˚ 26’ 56.40’’
Universal Tranverse Mercator:	Zone 11
UTM X (Meters):	366582.9
UTM Y (Meters):	3791329.0
Elevation:	923 ft. above sea level

USGS TOPOGRAPHIC MAP

Target Property Map:	34118-C4 SAN FERNANDO, CA
Most Recent Revision:	1988
South Map:	34118-B4 VAN NUYS, CA
Most Recent Revision:	1991

EDR’s GeoCheck Physical Setting Source Addendum is provided to assist the environmental professional in forming an opinion about the impact of potential contaminant migration.

Assessment of the impact of contaminant migration generally has two principal investigative components:

1. Groundwater flow direction, and
2. Groundwater flow velocity.

Groundwater flow direction may be impacted by surface topography, hydrology, hydrogeology, characteristics of the soil, and nearby wells. Groundwater flow velocity is generally impacted by the nature of the geologic strata.

GEOCHECK® - PHYSICAL SETTING SOURCE SUMMARY

GROUNDWATER FLOW DIRECTION INFORMATION

Groundwater flow direction for a particular site is best determined by a qualified environmental professional using site-specific well data. If such data is not reasonably ascertainable, it may be necessary to rely on other sources of information, such as surface topographic information, hydrologic information, hydrogeologic data collected on nearby properties, and regional groundwater flow information (from deep aquifers).

TOPOGRAPHIC INFORMATION

Surface topography may be indicative of the direction of surficial groundwater flow. This information can be used to assist the environmental professional in forming an opinion about the impact of nearby contaminated properties or, should contamination exist on the target property, what downgradient sites might be impacted.

TARGET PROPERTY TOPOGRAPHY

General Topographic Gradient: General SSW

SURROUNDING TOPOGRAPHY: ELEVATION PROFILES

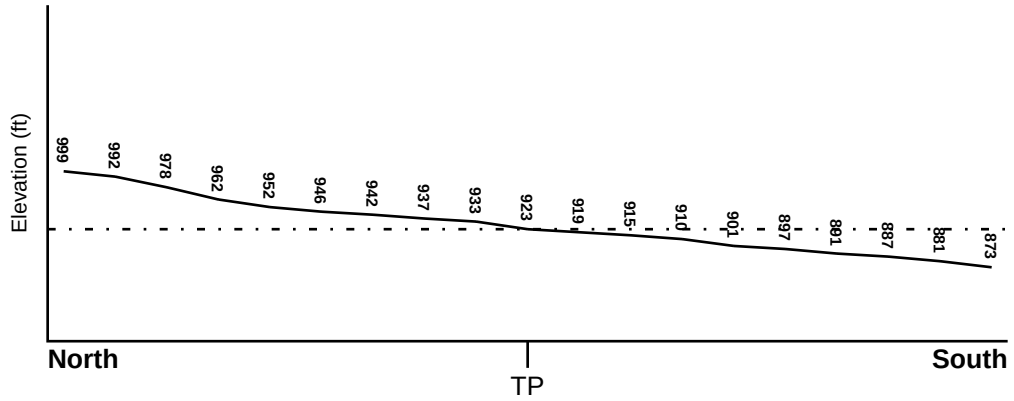

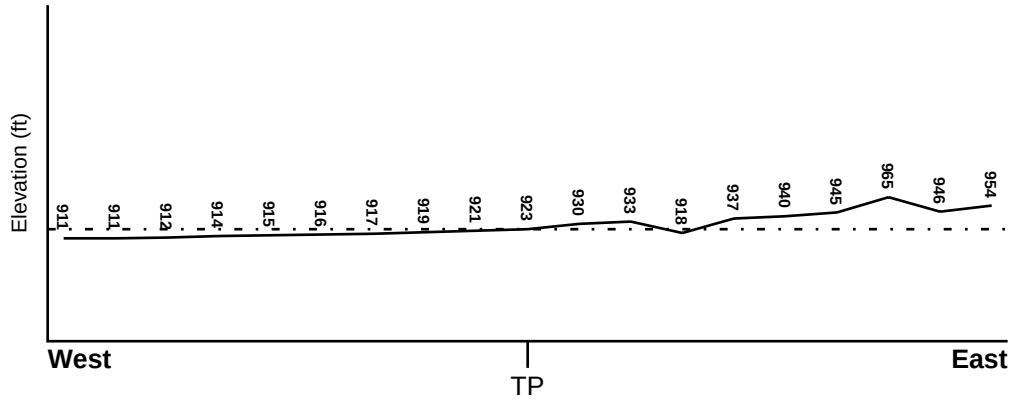

Target Property Elevation: 923 ft.

0 1/2 1 Miles

Source: Topography has been determined from the USGS 7.5' Digital Elevation Model and should be evaluated on a relative (not an absolute) basis. Relative elevation information between sites of close proximity should be field verified.

GEOCHECK® - PHYSICAL SETTING SOURCE SUMMARY

HYDROLOGIC INFORMATION

Surface water can act as a hydrologic barrier to groundwater flow. Such hydrologic information can be used to assist the environmental professional in forming an opinion about the impact of nearby contaminated properties or, should contamination exist on the target property, what downgradient sites might be impacted.

Refer to the Physical Setting Source Map following this summary for hydrologic information (major waterways and bodies of water).

FEMA FLOOD ZONE

Target Property County	FEMA Flood Electronic Data
LOS ANGELES, CA	YES - refer to the Overview Map and Detail Map

Flood Plain Panel at Target Property: 06037C - FEMA DFIRM Flood data

Additional Panels in search area: Not Reported

NATIONAL WETLAND INVENTORY

NWI Quad at Target Property	NWI Electronic Data Coverage
NOT AVAILABLE	YES - refer to the Overview Map and Detail Map

HYDROGEOLOGIC INFORMATION

Hydrogeologic information obtained by installation of wells on a specific site can often be an indicator of groundwater flow direction in the immediate area. Such hydrogeologic information can be used to assist the environmental professional in forming an opinion about the impact of nearby contaminated properties or, should contamination exist on the target property, what downgradient sites might be impacted.

Site-Specific Hydrogeological Data*:

Search Radius: 1.25 miles
Status: Not found

AQUIFLOW®

Search Radius: 1.000 Mile.

EDR has developed the AQUIFLOW Information System to provide data on the general direction of groundwater flow at specific points. EDR has reviewed reports submitted by environmental professionals to regulatory authorities at select sites and has extracted the date of the report, groundwater flow direction as determined hydrogeologically, and the depth to water table.

MAP ID	LOCATION FROM TP	GENERAL DIRECTION GROUNDWATER FLOW
Not Reported		

* ©1996 Site−specific hydrogeological data gathered by CERCLIS Alerts, Inc., Bainbridge Island, WA. All rights reserved. All of the information and opinions presented are those of the cited EPA report(s), which were completed under a Comprehensive Environmental Response Compensation and Liability Information System (CERCLIS) investigation.

GEOCHECK® - PHYSICAL SETTING SOURCE SUMMARY

GROUNDWATER FLOW VELOCITY INFORMATION

Groundwater flow velocity information for a particular site is best determined by a qualified environmental professional using site specific geologic and soil strata data. If such data are not reasonably ascertainable, it may be necessary to rely on other sources of information, including geologic age identification, rock stratigraphic unit and soil characteristics data collected on nearby properties and regional soil information. In general, contaminant plumes move more quickly through sandy-gravelly types of soils than silty-clayey types of soils.

GEOLOGIC INFORMATION IN GENERAL AREA OF TARGET PROPERTY

Geologic information can be used by the environmental professional in forming an opinion about the relative speed at which contaminant migration may be occurring.

ROCK STRATIGRAPHIC UNIT

Era:	Cenozoic
System:	Quaternary
Series:	Quaternary
Code:	Q *(decoded above as Era, System & Series)*

GEOLOGIC AGE IDENTIFICATION

Category: Stratifed Sequence

Geologic Age and Rock Stratigraphic Unit Source: P.G. Schruben, R.E. Arndt and W.J. Bawiec, Geology of the Conterminous U.S. at 1:2,500,000 Scale - a digital representation of the 1974 P.B. King and H.M. Beikman Map, USGS Digital Data Series DDS - 11 (1994).

SSURGO SOIL MAP - 4185299.2s

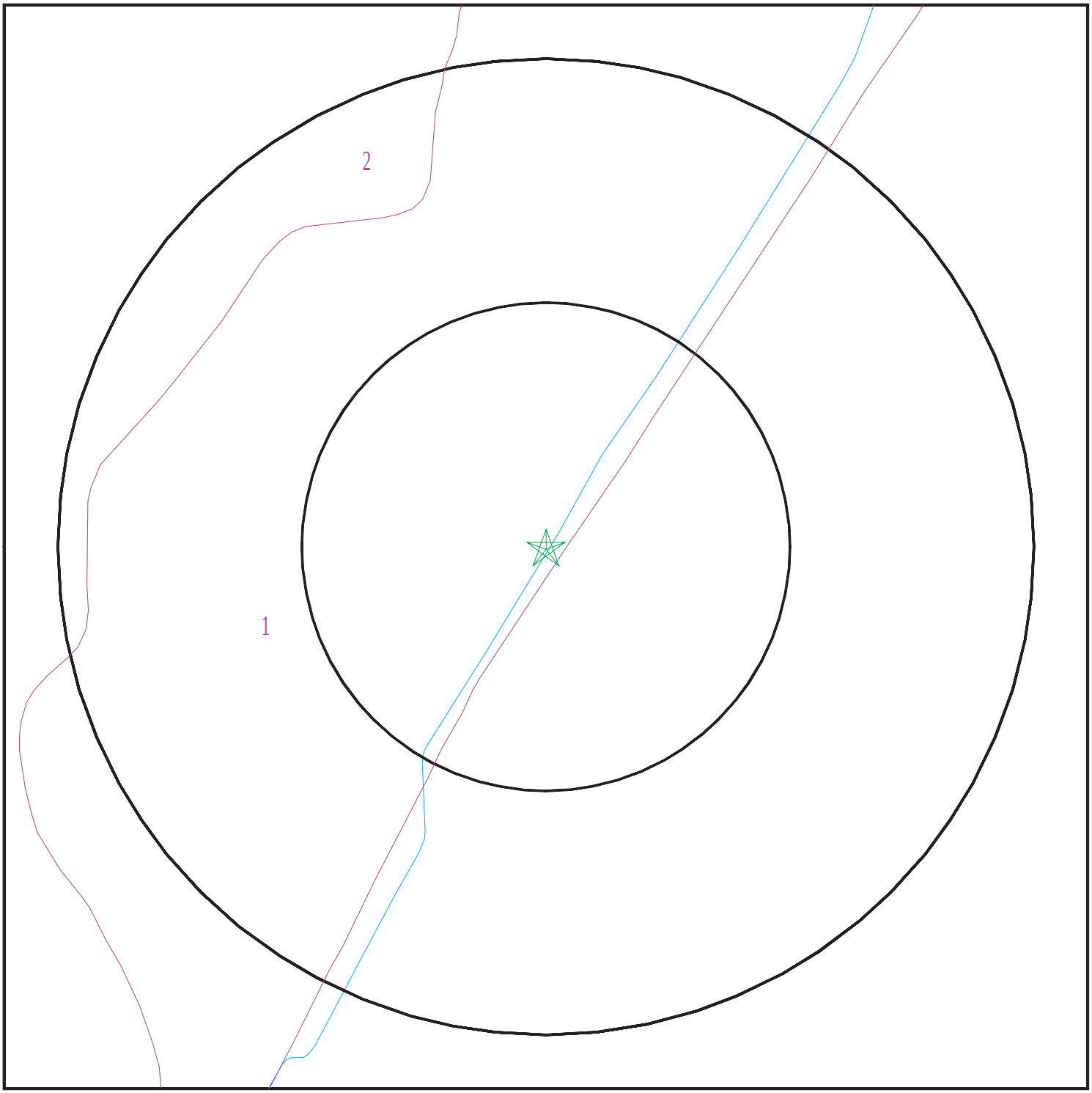

Target Property
SSURGO Soil
Water

0 1/16 1/8 1/4 Miles

N

SITE NAME:	Pacoima Spreading Grounds Lacfcd Site	CLIENT:	GeoSyntec Consultants
ADDRESS:	Intersection of Devonshire Street & Arleta Ave Mission Hills, Los A CA 91345	CONTACT:	Zahra Amini
		INQUIRY #:	4185299.2s
LAT/LONG:	34.2563 / 118.449	DATE:	January 19, 2015 2:11 pm

Copyright © 2015 EDR, Inc. © 2010 Tele Atlas Rel. 07/2009.

GEOCHECK® - PHYSICAL SETTING SOURCE SUMMARY

DOMINANT SOIL COMPOSITION IN GENERAL AREA OF TARGET PROPERTY

The U.S. Department of Agriculture's (USDA) Soil Conservation Service (SCS) leads the National Cooperative Soil Survey (NCSS) and is responsible for collecting, storing, maintaining and distributing soil survey information for privately owned lands in the United States. A soil map in a soil survey is a representation of soil patterns in a landscape. The following information is based on Soil Conservation Service SSURGO data.

Soil Map ID: 1

Soil Component Name: Xerorthents

Soil Surface Texture: variable

Hydrologic Group: Class C - Slow infiltration rates. Soils with layers impeding downward movement of water, or soils with moderately fine or fine textures.

Soil Drainage Class: Well drained

Hydric Status: Partially hydric

Corrosion Potential - Uncoated Steel: Not Reported

Depth to Bedrock Min: > 0 inches

Depth to Watertable Min: > 0 inches

Soil Layer Information							
	Boundary			Classification		Saturated hydraulic conductivity micro m/sec	Soil Reaction (pH)
Layer	Upper	Lower	Soil Texture Class	AASHTO Group	Unified Soil		
1	0 inches	59 inches	variable	Not reported	Not reported	Max: Min:	Max: Min:
2	59 inches	64 inches	unweathered bedrock	Not reported	Not reported	Max: Min:	Max: Min:

Soil Map ID: 2

Soil Component Name: Capistrano

Soil Surface Texture: fine sandy loam

Hydrologic Group: Class C - Slow infiltration rates. Soils with layers impeding downward movement of water, or soils with moderately fine or fine textures.

Soil Drainage Class:
Hydric Status: Not hydric

Corrosion Potential - Uncoated Steel: High

Depth to Bedrock Min: > 0 inches

Depth to Watertable Min: > 0 inches

GEOCHECK® - PHYSICAL SETTING SOURCE SUMMARY

Soil Layer Information							
	Boundary			Classification		Saturated hydraulic conductivity micro m/sec	Soil Reaction (pH)
Layer	Upper	Lower	Soil Texture Class	AASHTO Group	Unified Soil		
1	0 inches	40 inches	fine sandy loam	Silt-Clay Materials (more than 35 pct. passing No. 200), Silty Soils.	COARSE-GRAINED SOILS, Sands, Sands with fines, Silty Sand.	Max: 42 Min: 14	Max: 8.4 Min: 6.1
2	40 inches	72 inches	loam	Silt-Clay Materials (more than 35 pct. passing No. 200), Silty Soils.	FINE-GRAINED SOILS, Silts and Clays (liquid limit less than 50%), silt.	Max: 14 Min: 4	Max: 8.4 Min: 6.6

LOCAL / REGIONAL WATER AGENCY RECORDS

EDR Local/Regional Water Agency records provide water well information to assist the environmental professional in assessing sources that may impact ground water flow direction, and in forming an opinion about the impact of contaminant migration on nearby drinking water wells.

WELL SEARCH DISTANCE INFORMATION

DATABASE	SEARCH DISTANCE (miles)
Federal USGS	1.000
Federal FRDS PWS	Nearest PWS within 0.001 miles
State Database	1.000

FEDERAL USGS WELL INFORMATION

MAP ID	WELL ID	LOCATION FROM TP
No Wells Found		

FEDERAL FRDS PUBLIC WATER SUPPLY SYSTEM INFORMATION

MAP ID	WELL ID	LOCATION FROM TP
No PWS System Found		

Note: PWS System location is not always the same as well location.

GEOCHECK® - PHYSICAL SETTING SOURCE SUMMARY

STATE DATABASE WELL INFORMATION

MAP ID	WELL ID	LOCATION FROM TP
No Wells Found		

OTHER STATE DATABASE INFORMATION

STATE OIL/GAS WELL INFORMATION

MAP ID	WELL ID	LOCATION FROM TP
A1	CAOG9A000034924	1/4 - 1/2 Mile WNW
A2	CAOG9A000034926	1/4 - 1/2 Mile WNW
B3	CAOG9A000034936	1/2 - 1 Mile NE
B4	CAOG9A000034937	1/2 - 1 Mile NE
B5	CAOG9A000034940	1/2 - 1 Mile NE
B6	CAOG9A000034939	1/2 - 1 Mile NE
B7	CAOG9A000034938	1/2 - 1 Mile NE
B8	CAOG9A000034941	1/2 - 1 Mile NE
B9	CAOG9A000034942	1/2 - 1 Mile NE
B10	CAOG9A000034944	1/2 - 1 Mile NE
B11	CAOG9A000034945	1/2 - 1 Mile NE
B12	CAOG9A000034943	1/2 - 1 Mile NE
13	CAOG9A000034929	1/2 - 1 Mile ENE
14	CAOG9A000034970	1/2 - 1 Mile North

PHYSICAL SETTING SOURCE MAP - 4185299.2s

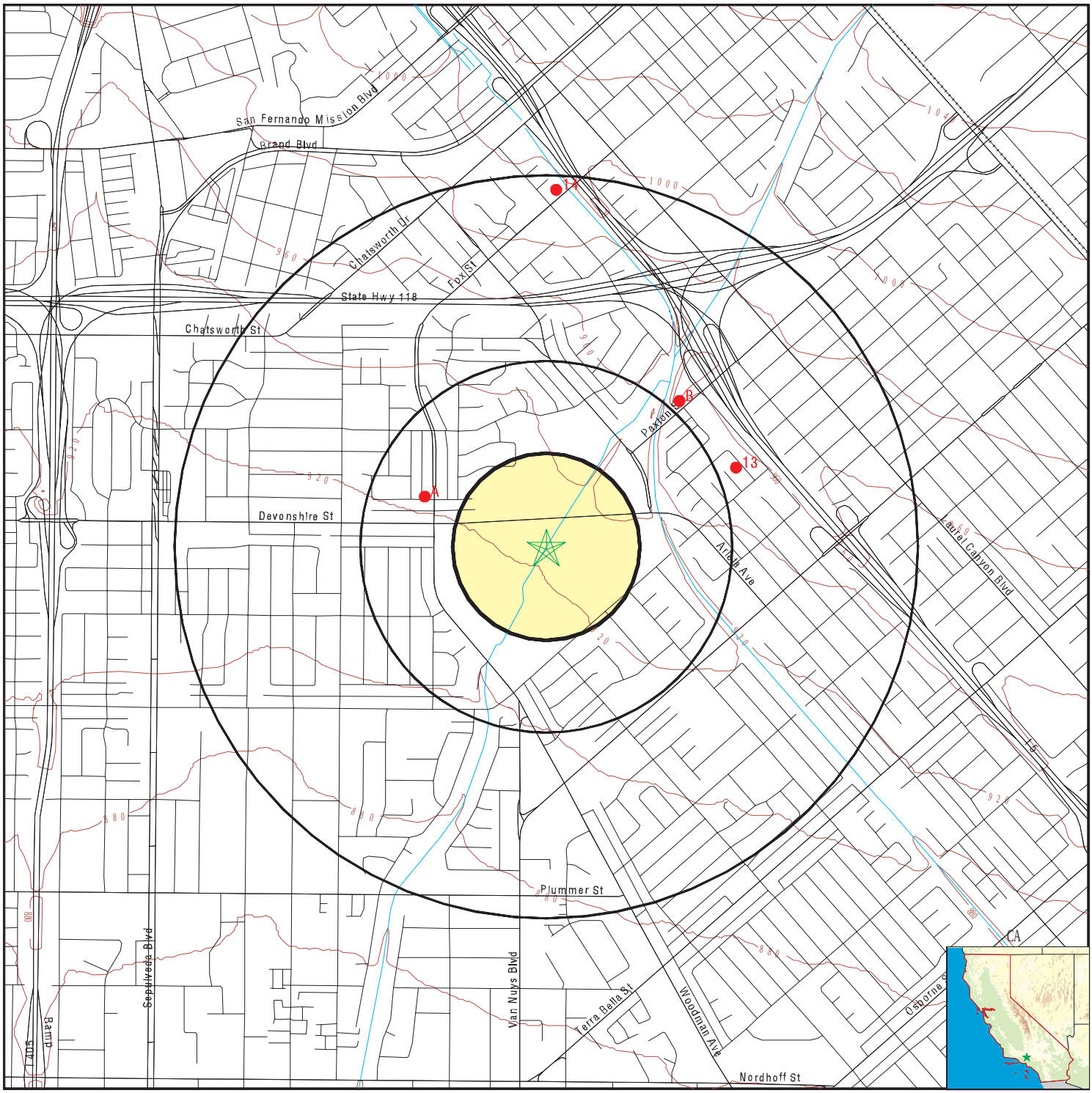

0 1/4 1/2 1 Miles

- County Boundary
- Major Roads
- Contour Lines
- Earthquake Fault Lines
- Earthquake epicenter, Richter 5 or greater
- Water Wells
- Public Water Supply Wells
- Cluster of Multiple Icons
- Groundwater Flow Direction
- GI Indeterminate Groundwater Flow at Location
- GV Groundwater Flow Varies at Location
- HD Closest Hydrogeological Data
- Oil, gas or related wells

SITE NAME:	Pacoima Spreading Grounds Lacfcd Site	CLIENT:	GeoSyntec Consultants
ADDRESS:	Intersection of Devonshire Street & Arleta Ave Mission Hills, Los A CA 91345	CONTACT:	Zahra Amini
		INQUIRY #:	4185299.2s
LAT/LONG:	34.2563 / 118.449	DATE:	January 19, 2015 2:11 pm

Copyright © 2015 EDR, Inc. © 2010 Tele Atlas Rel. 07/2009.

Map ID Direction Distance	Database	EDR ID Number

A1
WNW
1/4 - 1/2 Mile

OIL_GAS **CAOG9A000034924**

Districtnu:	2	Apinumber:	03721802
Blmwell:	N	Redrillcan:	No
Dryhole:	Y	Wellstatus:	P
Operatorna:	Chevron U.S.A. Inc.		
Countyname:	Los Angeles	Fieldname:	Any Field
Areaname:	Any Area		
Section:	16		
Township:	02N	Range:	15W
Basemeridi:	SB	Elevation:	Not Reported
Locationde:	Not Reported		
Glat:	34.257712		
Glong:	-118.454888		
Gissourcec:	hud		
Comments:	Not Reported		
Leasename:	Burnet C.H.	Wellnumber:	1
Epawell:	N	Hydraulica:	N
Confidenti:	N	Spuddate:	30-DEC-99
Welldeptha:	Not Reported	Redrillfoo:	Not Reported
Abandonedd:	/ /	Completion:	/ /
Gissymbol:	Not Reported	Site id:	CAOG9A000034924

A2
WNW
1/4 - 1/2 Mile

OIL_GAS **CAOG9A000034926**

Districtnu:	2	Apinumber:	03721869
Blmwell:	N	Redrillcan:	No
Dryhole:	Y	Wellstatus:	P
Operatorna:	Chevron U.S.A. Inc.		
Countyname:	Los Angeles	Fieldname:	Any Field
Areaname:	Any Area		
Section:	16		
Township:	02N	Range:	15W
Basemeridi:	SB	Elevation:	Not Reported
Locationde:	Not Reported		
Glat:	34.258808		
Glong:	-118.454529		
Gissourcec:	hud		
Comments:	Not Reported		
Leasename:	Burnet C.H.	Wellnumber:	2
Epawell:	N	Hydraulica:	N
Confidenti:	N	Spuddate:	30-DEC-99
Welldeptha:	Not Reported	Redrillfoo:	Not Reported
Abandonedd:	/ /	Completion:	/ /
Gissymbol:	Not Reported	Site id:	CAOG9A000034926

B3
NE
1/2 - 1 Mile

OIL_GAS **CAOG9A000034936**

Districtnu:	2	Apinumber:	03722926
Blmwell:	N	Redrillcan:	No
Dryhole:	N	Wellstatus:	P
Operatorna:	Vintage Production California LLC		
Countyname:	Los Angeles	Fieldname:	Pacoima (ABD)
Areaname:	Any Area		
Section:	15		
Township:	02N	Range:	15W
Basemeridi:	SB	Elevation:	Not Reported
Locationde:	FR NW COR 935S 2100E		
Glat:	34.261951		
Glong:	-118.442834		
Gissourcec:	gps		
Comments:	Not Reported		
Leasename:	Pacoima	Wellnumber:	9
Epawell:	N	Hydraulica:	N
Confidenti:	N	Spuddate:	30-DEC-99
Welldeptha:	Not Reported	Redrillfoo:	Not Reported
Abandonedd:	/ /	Completion:	/ /
Gissymbol:	Not Reported	Site id:	CAOG9A000034936

B4
NE **OIL_GAS** **CAOG9A000034937**
1/2 - 1 Mile

Districtnu:	2	Apinumber:	03722946
Blmwell:	N	Redrillcan:	No
Dryhole:	N	Wellstatus:	P
Operatorna:	Vintage Production California LLC		
Countyname:	Los Angeles	Fieldname:	Pacoima (ABD)
Areaname:	Any Area		
Section:	15		
Township:	02N	Range:	15W
Basemeridi:	SB	Elevation:	Not Reported
Locationde:	Not Reported		
Glat:	34.261956		
Glong:	-118.44279		
Gissourcec:	gps		
Comments:	Not Reported		
Leasename:	Pacoima	Wellnumber:	11
Epawell:	N	Hydraulica:	N
Confidenti:	N	Spuddate:	30-DEC-99
Welldeptha:	Not Reported	Redrillfoo:	Not Reported
Abandonedd:	/ /	Completion:	/ /
Gissymbol:	Not Reported	Site id:	CAOG9A000034937

B5
NE **OIL_GAS** **CAOG9A000034940**
1/2 - 1 Mile

Districtnu:	2	Apinumber:	03729955
Blmwell:	N	Redrillcan:	No
Dryhole:	N	Wellstatus:	P
Operatorna:	Vintage Production California LLC		
Countyname:	Los Angeles	Fieldname:	Pacoima (ABD)
Areaname:	Any Area		
Section:	15		
Township:	02N	Range:	15W
Basemeridi:	SB	Elevation:	Not Reported
Locationde:	FR NW COR 920S 2050E		
Glat:	34.26198		
Glong:	-118.442818		
Gissourcec:	gps		
Comments:	Not Reported		
Leasename:	Pacoima	Wellnumber:	WEST 1
Epawell:	N	Hydraulica:	N
Confidenti:	N	Spuddate:	30-DEC-99
Welldeptha:	Not Reported	Redrillfoo:	Not Reported
Abandonedd:	/ /	Completion:	/ /
Gissymbol:	Not Reported	Site id:	CAOG9A000034940

B6
NE **OIL_GAS** **CAOG9A000034939**
1/2 - 1 Mile

Districtnu:	2	Apinumber:	03722952
Blmwell:	N	Redrillcan:	No
Dryhole:	N	Wellstatus:	P
Operatorna:	Vintage Production California LLC		
Countyname:	Los Angeles	Fieldname:	Pacoima (ABD)
Areaname:	Any Area		
Section:	15		
Township:	02N	Range:	15W
Basemeridi:	SB	Elevation:	Not Reported
Locationde:	FR NW COR 910S 2110E		
Glat:	34.261964		
Glong:	-118.44277		
Gissourcec:	gps		
Comments:	Not Reported		
Leasename:	Pacoima	Wellnumber:	10
Epawell:	N	Hydraulica:	N
Confidenti:	N	Spuddate:	30-DEC-99
Welldeptha:	Not Reported	Redrillfoo:	Not Reported
Abandonedd:	/ /	Completion:	/ /
Gissymbol:	Not Reported	Site id:	CAOG9A000034939

B7
NE **OIL_GAS** **CAOG9A000034938**
1/2 - 1 Mile

Districtnu:	2	Apinumber:	03722741
Blmwell:	N	Redrillcan:	No
Dryhole:	N	Wellstatus:	P
Operatorna:	Vintage Production California LLC		
Countyname:	Los Angeles	Fieldname:	Pacoima (ABD)
Areaname:	Any Area		
Section:	15		
Township:	02N	Range:	15W
Basemeridi:	SB	Elevation:	Not Reported
Locationde:	FR NW COR 883S 2060E		
Glat:	34.261961		
Glong:	-118.442767		
Gissourcec:	gps		
Comments:	Not Reported		
Leasename:	Pacoima	Wellnumber:	7
Epawell:	N	Hydraulica:	N
Confidenti:	N	Spuddate:	30-DEC-99
Welldeptha:	Not Reported	Redrillfoo:	Not Reported
Abandonedd:	/ /	Completion:	/ /
Gissymbol:	Not Reported	Site id:	CAOG9A000034938

B8
NE
1/2 - 1 Mile

OIL_GAS **CAOG9A000034941**

Districtnu:	2	Apinumber:	03722356
Blmwell:	N	Redrillcan:	No
Dryhole:	N	Wellstatus:	P
Operatorna:	Vintage Production California LLC		
Countyname:	Los Angeles	Fieldname:	Pacoima (ABD)
Areaname:	Any Area		
Section:	15		
Township:	02N	Range:	15W
Basemeridi:	SB	Elevation:	Not Reported
Locationde:	FR NW COR 825S 2060E		
Glat:	34.261998		
Glong:	-118.442692		
Gissourcec:	gps		
Comments:	Not Reported		
Leasename:	Pacoima	Wellnumber:	4
Epawell:	N	Hydraulica:	N
Confidenti:	N	Spuddate:	30-DEC-99
Welldeptha:	Not Reported	Redrillfoo:	Not Reported
Abandonedd:	/ /	Completion:	/ /
Gissymbol:	Not Reported	Site id:	CAOG9A000034941

B9
NE
1/2 - 1 Mile

OIL_GAS **CAOG9A000034942**

Districtnu:	2	Apinumber:	03722709
Blmwell:	N	Redrillcan:	No
Dryhole:	N	Wellstatus:	P
Operatorna:	Vintage Production California LLC		
Countyname:	Los Angeles	Fieldname:	Pacoima (ABD)
Areaname:	Any Area		
Section:	15		
Township:	02N	Range:	15W
Basemeridi:	SB	Elevation:	Not Reported
Locationde:	FR NW COR 830S 2060E		
Glat:	34.262008		
Glong:	-118.442695		
Gissourcec:	gps		
Comments:	Not Reported		
Leasename:	Pacoima	Wellnumber:	5
Epawell:	N	Hydraulica:	N
Confidenti:	N	Spuddate:	30-DEC-99
Welldeptha:	Not Reported	Redrillfoo:	Not Reported
Abandonedd:	/ /	Completion:	/ /
Gissymbol:	Not Reported	Site id:	CAOG9A000034942

B10
NE **OIL_GAS** **CAOG9A000034944**
1/2 - 1 Mile

Districtnu:	2	Apinumber:	03729959
Blmwell:	N	Redrillcan:	No
Dryhole:	N	Wellstatus:	P
Operatorna:	Vintage Production California LLC		
Countyname:	Los Angeles	Fieldname:	Pacoima (ABD)
Areaname:	Any Area		
Section:	15		
Township:	02N	Range:	15W
Basemeridi:	SB	Elevation:	Not Reported
Locationde:	FR C/L PAXTON 302 SWLY 115 NWLY		
Glat:	34.262046		
Glong:	-118.442715		
Gissourcec:	gps		
Comments:	Not Reported		
Leasename:	Pacoima	Wellnumber:	12
Epawell:	N	Hydraulica:	N
Confidenti:	N	Spuddate:	30-DEC-99
Welldeptha:	Not Reported	Redrillfoo:	Not Reported
Abandonedd:	/ /	Completion:	/ /
Gissymbol:	Not Reported	Site id:	CAOG9A000034944

B11
NE **OIL_GAS** **CAOG9A000034945**
1/2 - 1 Mile

Districtnu:	2	Apinumber:	03722942
Blmwell:	N	Redrillcan:	No
Dryhole:	N	Wellstatus:	P
Operatorna:	Vintage Production California LLC		
Countyname:	Los Angeles	Fieldname:	Pacoima (ABD)
Areaname:	Any Area		
Section:	15		
Township:	02N	Range:	15W
Basemeridi:	SB	Elevation:	Not Reported
Locationde:	FR NW COR 930S 2050E		
Glat:	34.262051		
Glong:	-118.442693		
Gissourcec:	gps		
Comments:	Not Reported		
Leasename:	Pacoima	Wellnumber:	13
Epawell:	N	Hydraulica:	N
Confidenti:	N	Spuddate:	30-DEC-99
Welldeptha:	Not Reported	Redrillfoo:	Not Reported
Abandonedd:	/ /	Completion:	/ /
Gissymbol:	Not Reported	Site id:	CAOG9A000034945

B12
NE
1/2 - 1 Mile

OIL_GAS **CAOG9A000034943**

Districtnu:	2	Apinumber:	03722745
Blmwell:	N	Redrillcan:	No
Dryhole:	N	Wellstatus:	P
Operatorna:	Vintage Production California LLC		
Countyname:	Los Angeles	Fieldname:	Pacoima (ABD)
Areaname:	Any Area		
Section:	15		
Township:	02N	Range:	15W
Basemeridi:	SB	Elevation:	Not Reported
Locationde:	FR NW COR 890S 2100E		
Glat:	34.262041		
Glong:	-118.442645		
Gissourcec:	gps		
Comments:	Not Reported		
Leasename:	Pacoima	Wellnumber:	8
Epawell:	N	Hydraulica:	N
Confidenti:	N	Spuddate:	30-DEC-99
Welldeptha:	Not Reported	Redrillfoo:	Not Reported
Abandonedd:	/ /	Completion:	/ /
Gissymbol:	Not Reported	Site id:	CAOG9A000034943

13
ENE
1/2 - 1 Mile

OIL_GAS **CAOG9A000034929**

Districtnu:	2	Apinumber:	03706001
Blmwell:	N	Redrillcan:	No
Dryhole:	Y	Wellstatus:	P
Operatorna:	Chevron U.S.A. Inc.		
Countyname:	Los Angeles	Fieldname:	Any Field
Areaname:	Any Area		
Section:	15		
Township:	02N	Range:	15W
Basemeridi:	SB	Elevation:	Not Reported
Locationde:	Not Reported		
Glat:	34.259393		
Glong:	-118.440081		
Gissourcec:	hud		
Comments:	Not Reported		
Leasename:	University	Wellnumber:	1
Epawell:	N	Hydraulica:	N
Confidenti:	N	Spuddate:	30-DEC-99
Welldeptha:	Not Reported	Redrillfoo:	Not Reported
Abandonedd:	/ /	Completion:	/ /
Gissymbol:	Not Reported	Site id:	CAOG9A000034929

14
North
1/2 - 1 Mile

OIL_GAS **CAOG9A000034970**

Districtnu:	2	Apinumber:	03720519
Blmwell:	N	Redrillcan:	No
Dryhole:	Y	Wellstatus:	P
Operatorna:	Occidental Petroleum Corporation		
Countyname:	Los Angeles	Fieldname:	Any Field
Areaname:	Any Area		
Section:	10		
Township:	02N	Range:	15W
Basemeridi:	SB	Elevation:	Not Reported
Locationde:	Not Reported		
Glat:	34.270239		
Glong:	-118.448535		
Gissourcec:	hud		
Comments:	Not Reported		
Leasename:	Pacoima EH	Wellnumber:	1
Epawell:	N	Hydraulica:	N
Confidenti:	N	Spuddate:	30-DEC-99
Welldeptha:	Not Reported	Redrillfoo:	Not Reported
Abandonedd:	/ /	Completion:	/ /
Gissymbol:	Not Reported	Site id:	CAOG9A000034970

GEOCHECK® - PHYSICAL SETTING SOURCE MAP FINDINGS
RADON

AREA RADON INFORMATION

State Database: CA Radon

Radon Test Results

Zipcode	Num Tests	> 4 pCi/L
91345	21	0

Federal EPA Radon Zone for LOS ANGELES County: 2

Note: Zone 1 indoor average level > 4 pCi/L.
: Zone 2 indoor average level >= 2 pCi/L and <= 4 pCi/L.
: Zone 3 indoor average level < 2 pCi/L.

Federal Area Radon Information for LOS ANGELES COUNTY, CA

Number of sites tested: 63

Area	Average Activity	% <4 pCi/L	% 4-20 pCi/L	% >20 pCi/L
Living Area - 1st Floor	0.711 pCi/L	98%	2%	0%
Living Area - 2nd Floor	Not Reported	Not Reported	Not Reported	Not Reported
Basement	0.933 pCi/L	100%	0%	0%

PHYSICAL SETTING SOURCE RECORDS SEARCHED

TOPOGRAPHIC INFORMATION

USGS 7.5' Digital Elevation Model (DEM)
Source: United States Geologic Survey
EDR acquired the USGS 7.5' Digital Elevation Model in 2002 and updated it in 2006. The 7.5 minute DEM corresponds to the USGS 1:24,000- and 1:25,000-scale topographic quadrangle maps. The DEM provides elevation data with consistent elevation units and projection.

Scanned Digital USGS 7.5' Topographic Map (DRG)
Source: United States Geologic Survey
A digital raster graphic (DRG) is a scanned image of a U.S. Geological Survey topographic map. The map images are made by scanning published paper maps on high-resolution scanners. The raster image is georeferenced and fit to the Universal Transverse Mercator (UTM) projection.

HYDROLOGIC INFORMATION

Flood Zone Data: This data, available in select counties across the country, was obtained by EDR in 2003 & 2011 from the Federal Emergency Management Agency (FEMA). Data depicts 100-year and 500-year flood zones as defined by FEMA.

NWI: National Wetlands Inventory. This data, available in select counties across the country, was obtained by EDR in 2002, 2005 and 2010 from the U.S. Fish and Wildlife Service.

HYDROGEOLOGIC INFORMATION

AQUIFLOW[R] Information System
Source: EDR proprietary database of groundwater flow information
EDR has developed the AQUIFLOW Information System (AIS) to provide data on the general direction of groundwater flow at specific points. EDR has reviewed reports submitted to regulatory authorities at select sites and has extracted the date of the report, hydrogeologically determined groundwater flow direction and depth to water table information.

GEOLOGIC INFORMATION

Geologic Age and Rock Stratigraphic Unit
Source: P.G. Schruben, R.E. Arndt and W.J. Bawiec, Geology of the Conterminous U.S. at 1:2,500,000 Scale - A digital representation of the 1974 P.B. King and H.M. Beikman Map, USGS Digital Data Series DDS - 11 (1994).

STATSGO: State Soil Geographic Database
Source: Department of Agriculture, Natural Resources Conservation Services
The U.S. Department of Agriculture's (USDA) Natural Resources Conservation Service (NRCS) leads the national Conservation Soil Survey (NCSS) and is responsible for collecting, storing, maintaining and distributing soil survey information for privately owned lands in the United States. A soil map in a soil survey is a representation of soil patterns in a landscape. Soil maps for STATSGO are compiled by generalizing more detailed (SSURGO) soil survey maps.

SSURGO: Soil Survey Geographic Database
Source: Department of Agriculture, Natural Resources Conservation Services (NRCS)
Telephone: 800-672-5559
SSURGO is the most detailed level of mapping done by the Natural Resources Conservation Services, mapping scales generally range from 1:12,000 to 1:63,360. Field mapping methods using national standards are used to construct the soil maps in the Soil Survey Geographic (SSURGO) database. SSURGO digitizing duplicates the original soil survey maps. This level of mapping is designed for use by landowners, townships and county natural resource planning and management.

PHYSICAL SETTING SOURCE RECORDS SEARCHED

LOCAL / REGIONAL WATER AGENCY RECORDS

FEDERAL WATER WELLS

PWS: Public Water Systems
Source: EPA/Office of Drinking Water
Telephone: 202-564-3750
Public Water System data from the Federal Reporting Data System. A PWS is any water system which provides water to at least 25 people for at least 60 days annually. PWSs provide water from wells, rivers and other sources.

PWS ENF: Public Water Systems Violation and Enforcement Data
Source: EPA/Office of Drinking Water
Telephone: 202-564-3750
Violation and Enforcement data for Public Water Systems from the Safe Drinking Water Information System (SDWIS) after August 1995. Prior to August 1995, the data came from the Federal Reporting Data System (FRDS).

USGS Water Wells: USGS National Water Inventory System (NWIS)
This database contains descriptive information on sites where the USGS collects or has collected data on surface water and/or groundwater. The groundwater data includes information on wells, springs, and other sources of groundwater.

STATE RECORDS

Water Well Database
Source: Department of Water Resources
Telephone: 916-651-9648

California Drinking Water Quality Database
Source: Department of Public Health
Telephone: 916-324-2319
The database includes all drinking water compliance and special studies monitoring for the state of California since 1984. It consists of over 3,200,000 individual analyses along with well and water system information.

OTHER STATE DATABASE INFORMATION

California Oil and Gas Well Locations
Source: Department of Conservation
Telephone: 916-323-1779
Oil and Gas well locations in the state.

RADON

State Database: CA Radon
Source: Department of Health Services
Telephone: 916-324-2208
Radon Database for California

Area Radon Information
Source: USGS
Telephone: 703-356-4020
The National Radon Database has been developed by the U.S. Environmental Protection Agency (USEPA) and is a compilation of the EPA/State Residential Radon Survey and the National Residential Radon Survey. The study covers the years 1986 - 1992. Where necessary data has been supplemented by information collected at private sources such as universities and research institutions.

EPA Radon Zones
Source: EPA
Telephone: 703-356-4020
Sections 307 & 309 of IRAA directed EPA to list and identify areas of U.S. with the potential for elevated indoor radon levels.

PHYSICAL SETTING SOURCE RECORDS SEARCHED

OTHER

Airport Landing Facilities: Private and public use landing facilities
Source: Federal Aviation Administration, 800-457-6656

Epicenters: World earthquake epicenters, Richter 5 or greater
Source: Department of Commerce, National Oceanic and Atmospheric Administration

California Earthquake Fault Lines: The fault lines displayed on EDR's Topographic map are digitized quaternary fault lines, prepared in 1975 by the United State Geological Survey. Additional information (also from 1975) regarding activity at specific fault lines comes from California's Preliminary Fault Activity Map prepared by the California Division of Mines and Geology.

STREET AND ADDRESS INFORMATION

© 2010 Tele Atlas North America, Inc. All rights reserved. This material is proprietary and the subject of copyright protection and other intellectual property rights owned by or licensed to Tele Atlas North America, Inc. The use of this material is subject to the terms of a license agreement. You will be held liable for any unauthorized copying or disclosure of this material.

APPENDIX C
SELECTED AGENCY RECORDS

Environmental Support Services

Environmental Research & Due Diligence Compliance
30251 Golden Lantern, #E-305, Laguna Niguel, CA 92677
Tel) 949-429-3564 • Fax) 949-429-3563
www.EnvironmentalSupportServices.com • Info@EnvironmentalSupportServices.com

February 8, 2015

Project Name: Pacoima

Geosyntec Consultants
2100 Main Street, Suite 150
Huntington Beach, CA 92648

Attention: Zahra Amini

Dear Ms. Amini

Attached is the Environmental (Hazardous/Toxic Waste) Records Search Summary of the "Pacoima Spreading Grounds" located in the northern portion of the San Fernando Valley immediately west of the Pacoima Diversion Channel and near the intersection of Devonshire Street & Arleta Avenue and 10450 Arleta Avenue ("Pacoima") site located in Pacoima, California. Environmental Support Services ("**ESS**") received the request on January 16, 2015 and January 23, 2015 (See Appendix A). Should you have any questions regarding the summary, please call.

Sincerely,
Environmental Support Services

Shannon Castagno

Shannon Castagno
Project Manager
Shannon@EnvironmentalSupportServices.com

Records Search Summary

Company:	Geosyntec Consultants
Project Name:	Pacoima
Attention:	Zahra Amini
Street Address of Property:	"Pacoima Spreading Grounds" Located in the northern portion of the San Fernando Valley immediately west of the Pacoima Diversion Channel and near the intersection of Devonshire Street and Arleta Avenue 10450 Arleta Avenue Pacoima, CA APN's 2647-015-900, 2648-012-905, 2648-012-904, 2647-015-901, 2617-014-905 & 2617-014-904

Los Angeles County – Public Health Investigator

Faxed request: 1-16-15 & 1-23-15, Contact: Samuel Kaddis

ESS submitted a request for a records search concerning the Pacoima site to Mr. Kaddis, a Public Health Investigator for Los Angeles County (See Appendix B). **ESS** requested information concerning the utilization, manufacture, storage and/or discharge of hazardous materials/waste, and any information concerning previous or on-going site investigations/remediations pertaining to hazardous materials/waste. Thomas Nguyen, a Deputy Health Officer with the County, informed **ESS** on January 27, 2015 that his department had no records for 10450 Arleta Avenue, Pacoima, CA (See Appendix B).

Department of Toxic Substances Control (DTSC) – Cypress Office

Faxed request: 1-16-15 & 1-23-15, Contact: Julie Johnson/Jone Barrio

Previous contacts with the DTSC have disclosed that this office only collects and stores information (such as treatment, storage and disposal of hazardous waste) concerning sites which have existing businesses, industries, etc. present. **ESS** requested that Ms. Johnson/Ms. Barrio, with the DTSC, check the file room records for any files/information concerning "Pacoima Spreading Grounds" located in the northern portion of the San Fernando Valley immediately west of the Pacoima Diversion Channel and near the intersection of Devonshire Street & Arleta Avenue and 10450 Arleta Avenue, Pacoima, CA, APN's 2647-015-900, 2648-012-905, 2648-012-904, 2647-015-901, 2617-014-905 & 2617-014-904 (See Appendix C). Ms. Barrio informed **ESS** on January 27, 2015 that her department had no records for 10450 Arleta Avenue, Pacoima, CA (See Appendix C).

Department of Toxic Substances Control (DTSC) – Chatsworth Office

Faxed request: 1-16-15 & 1-23-15, Contact: Vivian Tutaan

Previous contacts with the DTSC have disclosed that this office only collects and stores information (such as treatment, storage and disposal of hazardous waste) concerning sites which have existing businesses, industries, etc. present. **ESS** requested that Ms. Tutaan, with the DTSC, check the file room records for any files/information concerning "Pacoima Spreading Grounds" located in the northern portion of the San Fernando Valley immediately west of the Pacoima Diversion Channel and near the intersection of Devonshire Street & Arleta Avenue and 10450 Arleta Avenue, Pacoima, CA, APN's 2647-015-900, 2648-012-905, 2648-012-904, 2647-015-901, 2617-014-905 & 2617-014-904 (See Appendix D). Glenn Castillo, with that department informed **ESS** on January 30, 2015 that his department had no records for 10450 Arleta Avenue, Pacoima, CA (See Appendix D).

City of Los Angeles Fire Department (Central) – Haz Mat Division

Faxed request: 1-16-15 & 1-23-15, Contact: Kacy Williams

ESS requested that Ms. Williams, with the City of Los Angeles Fire Dept., check her records concerning the storage of hazardous materials/waste with regards to the following: "Pacoima Spreading Grounds" located in the northern portion of the San Fernando Valley immediately west of the Pacoima Diversion Channel and near the intersection of Devonshire Street & Arleta Avenue and 10450 Arleta Avenue, Pacoima, CA, APN's 2647-015-900, 2648-012-905, 2648-012-904, 2647-015-901, 2617-014-905 & 2617-014-904. Sharon Dooley, with that department informed **ESS** on February 5, 2015 that her department only had records 10450 Arleta Avenue, Pacoima, CA (See Appendix E).

City of Los Angeles Fire Department (Central) – Plan Check/UG Tank Div

Faxed request: 1-16-15 & 1-23-15, Contact: Katie Rosa

ESS requested that Ms. Rosa, with the City of Los Angeles Fire Dept., check her records concerning the storage of hazardous materials/waste and underground storage tanks with regards to the following: "Pacoima Spreading Grounds" located in the northern portion of the San Fernando Valley immediately west of the Pacoima Diversion Channel and near the intersection of Devonshire Street & Arleta Avenue and 10450 Arleta Avenue, Pacoima, CA, APN's 2647-015-900, 2648-012-905, 2648-012-904, 2647-015-901, 2617-014-905 & 2617-014-904. As of February 8, 2015, Ms. Rosa had not completed **ESS'** request. Should any information concerning the site surface, **ESS** will immediately forward it to Ms. Amini at the Geosyntec Consultants office.

City of Los Angeles Fire Department (Central) – Ind/Comm Division

Visited: 1-20-15 & 1-28-15, Contact: Mina

ESS requested that Mina, with the City of Los Angeles Fire Dept., check her records concerning the storage of hazardous materials/waste and underground storage tanks with regards to the following: "Pacoima Spreading Grounds" located in the northern portion of the San Fernando Valley immediately west of the Pacoima Diversion Channel and near the intersection of Devonshire Street & Arleta Avenue and 10450 Arleta Avenue, Pacoima, CA, APN's 2647-015-900, 2648-012-905, 2648-012-904, 2647-015-901, 2617-014-905 & 2617-014-904. She informed **ESS** that her department had no files for that site.

City of Los Angeles Public Works – Industrial Waste

Faxed request: 1-16-15 & 1-23-15, Contact: Dennis Acevedo

ESS requested that Mr. Acevedo, with the City of Los Angeles Public Works Department, check his records for any information concerning industrial waste discharge permits or violations for "Pacoima Spreading Grounds" located in the northern portion of the San Fernando Valley immediately west of the Pacoima Diversion Channel and near the intersection of Devonshire Street & Arleta Avenue and 10450 Arleta Avenue, Pacoima, CA, APN's 2647-015-900, 2648-012-905, 2648-012-904, 2647-015-901, 2617-014-905 & 2617-014-904 (See Appendix F). Bellete Yohannes, with that department informed **ESS** on January 27, 2015 that his department had no records for 10450 Arleta Avenue, Pacoima, CA (See Appendix F).

City of Los Angeles Building Department

Visited: 1-20-15 & 1-28-15, Contact: Maria & Ramona

ESS requested that Maria & Ramona, with the City of Los Angeles Building Department, provide the building records (all building permits and certificates of occupancy) for "Pacoima Spreading Grounds" located in the northern portion of the San Fernando Valley immediately west of the Pacoima Diversion Channel and near the intersection of Devonshire Street & Arleta Avenue and 10450 Arleta Avenue, Pacoima, CA, APN's 2647-015-900, 2648-012-905, 2648-012-904, 2647-015-901, 2617-014-905 & 2617-014-904. They informed **ESS** they had no building records for that site. The City of Los Angeles Building records date back to the year 1905. No further information concerning the site was obtained from the building department at the time of the investigation.

South Coast Air Quality Management District (SCAQMD)

E-mailed request: 1-16-15 & 1-23-15, Contact: Linda Koenig

Previous communications with Personnel of the SCAQMD have disclosed that records concerning active, inactive and sold files can be obtained online. **ESS** searched the SCAQMD web site and no found records for "Pacoima Spreading Grounds" located in the northern portion of the San Fernando Valley immediately west of the Pacoima Diversion Channel and near the intersection of Devonshire Street & Arleta Avenue and 10450 Arleta Avenue, Pacoima, CA, APN's 2647-015-900, 2648-012-905, 2648-012-904, 2647-015-901, 2617-014-905 & 2617-014-904. **ESS** also submitted a search request concerning active, inactive and sold files concerning the Pacoima site to Ms. Koenig of Public Records at the SCAQMD (See Appendix G). Elizabeth Gonzalez, with that department informed **ESS** on January 30, 2015 that her department had no records for 10450 Arleta Avenue, Pacoima, CA (See Appendix G).

Regional Water Quality Control Board (RWQCB) – Los Angeles Region

E-mailed request: 1-16-15 & 1-23-15, Contact: Laura Gallardo

ESS requested that Ms. Gallardo, with the RWQCB, provide the files for "Pacoima Spreading Grounds" located in the northern portion of the San Fernando Valley immediately west of the Pacoima Diversion Channel and near the intersection of Devonshire Street & Arleta Avenue and 10450 Arleta Avenue, Pacoima, CA, APN's 2647-015-900, 2648-012-905, 2648-012-904, 2647-015-901, 2617-014-905 & 2617-014-904 (See Appendix H). Rosie Villar, with that department, informed **ESS** on January 26, 2015 & February 2, 2015 that her department had no records for the Pacoima site (See Appendix H).

Records Search completed by:

Shannon Castagno

_____

Shannon Castagno
Project Manager
Environmental Support Services

The information provided in this report was obtained by a comprehensive examination of public records, public information and public servant communications. The degree of care performed by **ESS** is equivalent to that exercised by environmental companies performing similar records searches.

Appendix A

Environmental (Hazardous/Toxic Waste) Records Search
Order Form

From: Zahra Amini [ZAmini@Geosyntec.com]
Sent: Friday, January 23, 2015 1:35 PM
To: Shannon@EnvironmentalSupportServices.com
Cc: Mike Reardon
Subject: Pacoima Spreading Grounds

Hi Shannon,

We got a hold of a previous report for the site: "Pacoima Spreading Grounds" that indicates a street address for the site as the following:

10450 Arleta Avenue
Pacoima, California

I was wondering if you could apply this new information to the request to the regulatory agencies for relevant documents. I would appreciate it if you could let me know of the associated costs in advance.

Many thanks,

Zahra

Zahra Amini, Ph.D.
Engineer

2100 Main Street, Suite 150
Huntington Beach, CA 92648
Direct line: 714 465 12 46
Fax: 714 969 08 20
Cell: 714 475 86 90
www.geosyntec.com

Geosyntec consultants

engineers | scientists | innovators

This electronic mail message contains information that (a) is or may be LEGALLY PRIVILEGED, CONFIDENTIAL, PROPRIETARY IN NATURE, OR OTHERWISE PROTECTED BY LAW FROM DISCLOSURE, and (b) is intended only for the use of the Addressee(s) named herein. If you are not the intended recipient, an addressee, or the person responsible for delivering this to an addressee, you are hereby notified that reading, using, copying, or distributing any part of this message is strictly prohibited. If you have received this electronic mail message in error, please contact us immediately and take the steps necessary to delete the message completely from your computer system.

From: Zahra Amini [ZAmini@Geosyntec.com]
Sent: Friday, January 16, 2015 12:35 PM
To: Shannon@EnvironmentalSupportServices.com
Subject: Environmental Records Search
Attachments: Site Figures.pdf; Site Location.pdf

Hi Shannon,

It was great speaking with you earlier today. I would like to ask you to please provide us with your services regarding environmental records for the site described below. We are interested in your full package that includes building, fire, and environmental health agencies in addition to Sanitation, DTSC, AQMD, Regional Board and etc for $350. As I mentioned before please note that this is a fairly quick turnaround job for us.

Site name: Pacoima Spreading Grounds

Los Angeles County Flood Control District's (LACFCD) Spreading Ground Site is located in the northern portion of the San Fernando Valley immediately west of the Pacoima Diversion Channel and near the intersection of Devonshire Street and Arleta Avenue.

I have attached some figures to this email for more information regarding site location. Please do not hesitate to contact me if you have any questions.

Thank you very much and best regards,

Zahra

Zahra Amini, Ph.D.
Engineer

2100 Main Street, Suite 150
Huntington Beach, CA 92648
Direct line: 714 465 12 46
Fax: 714 969 08 20
Cell: 714 475 86 90
www.geosyntec.com

Geosyntec consultants

engineers | scientists | innovators

This electronic mail message contains information that (a) is or may be LEGALLY PRIVILEGED, CONFIDENTIAL, PROPRIETARY IN NATURE, OR OTHERWISE PROTECTED BY LAW FROM DISCLOSURE, and (b) is intended only for the use of the Addressee(s) named herein. If you are not the intended recipient, an addressee, or the person responsible for delivering this to an addressee, you are hereby notified that reading, using, copying, or distributing any part of this message is strictly prohibited. If you have received this electronic mail message in error, please contact us immediately and take the steps necessary to delete the message completely from your computer system.

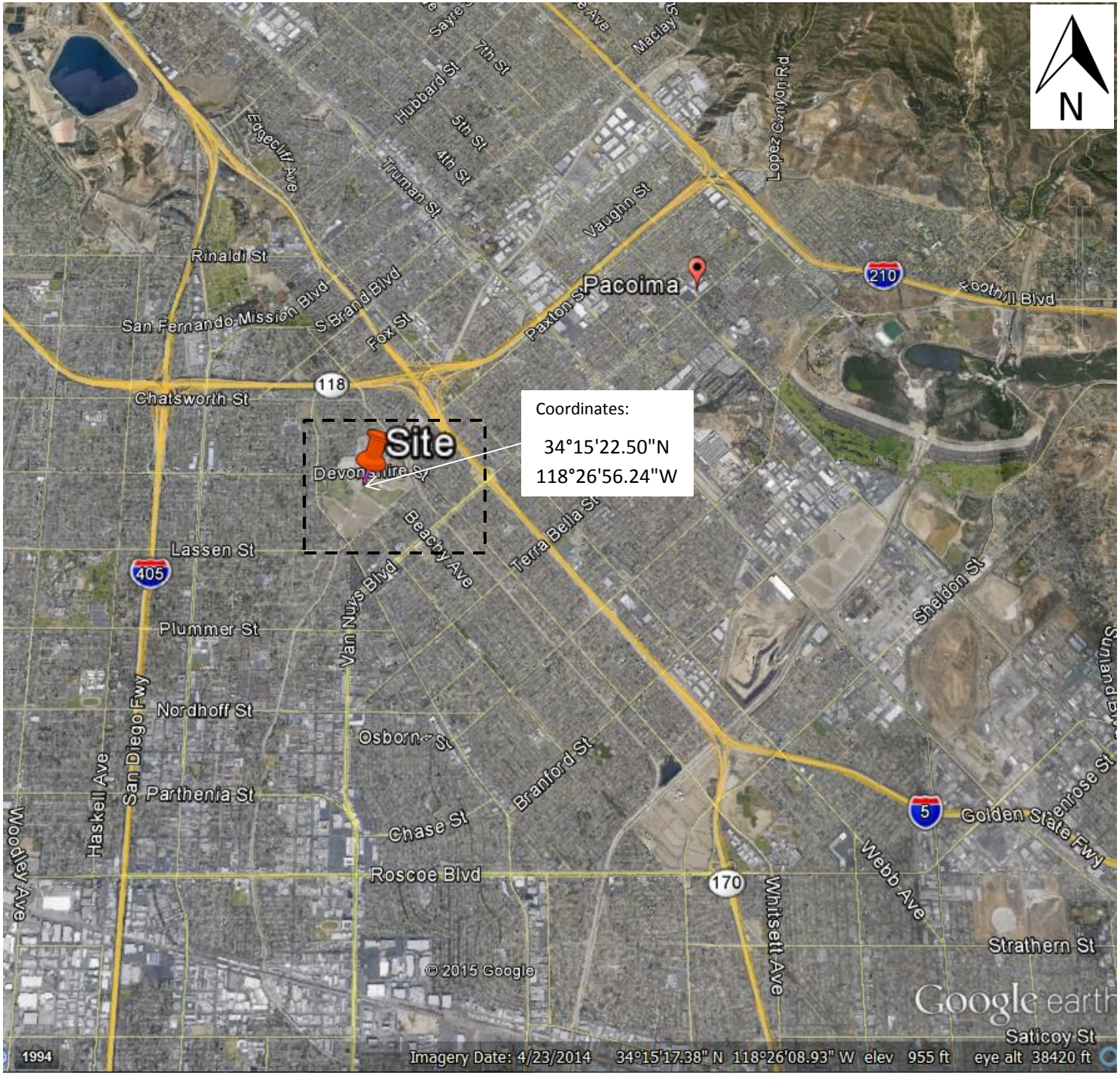
N
Coordinates:
34°15'22.50"N
118°26'56.24"W
Site
Pacoima
Rinaldi St
San Fernando Mission Blvd
S Brand Blvd
Fox St
Paxton St
Vaughn St
Hubbard St
7th St
5th St
4th St
Truman St
Eggcliff Ave
Macley St
Lopez Canyon Rd
Foothill Blvd
210
118
Chatsworth St
Devonshire St
Beachy Ave
Terra Bella St
Lassen St
405
Van Nuys Blvd
Plummer St
Sheldon St
Nordhoff St
Osborne St
Branford St
Parthenia St
Chase St
Roscoe Blvd
San Diego Fwy
Haskell Ave
Woodley Ave
5
Golden State Fwy
Sunland Blvd
Glenrose St
Webb Ave
170
Whitsett Ave
Strathern St
Saticoy St
© 2015 Google
Google earth
1994
Imagery Date: 4/23/2014 34°15'17.38" N 118°26'08.93" W elev 955 ft eye alt 38420 ft

Pacoima
Spreading
Grounds
Kingsbury St
Clymer St
Germain St
Kester Ave
Bevis Ave
Woodman Ave
Cedros Ave
San Jose St
Minnehaha St
Hiawatha St
Blackhawk St
Devonshire St
Tuba St
Devonwood Park
Mayall St
Stare St
Vintage St
Willis Ave
Saloma Ave
Wooddale Ave
Stanwin Ave
Arleta Ave
Lev Ave
Minnehaha St
Paxton St
Remick Ave
Weidner St
Louvre St
Filmore St
Vena Ave
Sharp Ave
Daventry St
Montford St
Patrick Ave
Golden State Fwy
I 56 B
5
I-5 N
I-5 S
Mercer St
Bartee Ave
Filmore St
Beachy Ave
Bordeaux Ave
Claretta St
Obeck Ave
Judd St
Buys Blvd

Geosyntec consultants

PROJECT LOCATION
SPREADING GROUND
SAN FERNANDO VALLEY, CALIFORNIA

DATE:	12 DECEMBER 2014	FILE NO.	FIGURE 1.DOC
PROPOSAL #:	N/A	FIGURE NO.	1

Geosyntec consultants

SITE MAP
SPREADING GROUND
SAN FERNANDO VALLEY, CALIFORNIA

DATE:	**12 DECEMBER 2014**	**FILE NO.**	**FIGURE 2.DOC**
PROPOSAL #:	**N/A**	**FIGURE NO.**	**2**

Appendix B

Request for Records Search to the
Los Angeles County Public Health Investigator and
Response from that Agency

Environmental Support Services
Environmental Research & Due Diligence Compliance
30251 Golden Lantern, #E-305, Laguna Niguel, CA 92677
Tel) 949-429-3564 • Fax) 949-429-3563
www.EnvironmentalSupportServices.com • Info@EnvironmentalSupportServices.com

January 16, 2015

County of Los Angeles
Department of Public Health – Public Health Investigator
5555 Ferguson Drive, Ste 120-04
Commerce, CA 90022

Attention: Custodian of Records

Subject: Records Search – Hazardous Materials/Waste/Underground Tanks

Site: "Pacoima Spreading Grounds"
Los Angeles County Flood Control District's (LACFCD) Spreading Ground Site
Located in the northern portion of the San Fernando Valley immediately west of the Pacoima Diversion Channel and near the intersection of Devonshire Street and Arleta Avenue
Pacoima, CA 91331
APN's 2647-015-900 & 901, 2617-014-904 & 905 and 2648-012-904 & 905
(See Attached Maps)

Dear Custodian of Records,

Environmental Support Services (ESS) is in the process of conducting a records search for an environmental audit at a site in Pacoima, CA. This search includes researching the history of the site, especially as it pertains to hazardous materials/waste. With this in mind, **ESS** requests the following information concerning the subject address which your agency may have on file:

1. any unauthorized releases, utilization, manufacture, storage, or discharge of hazardous materials/waste.

2. previous or on-going site investigations/remediations pertaining to hazardous materials/waste.

Should you have any questions concerning this request for information, please call. Your expedient processing of this request is appreciated.

Sincerely,
Environmental Support Services

Shannon Castagno

Shannon Castagno
Project Manager

Pacoima
Spreading
Grounds
Kingsbury St
Clymer St
Germain St
Kester Ave
Bevis Ave
Woodman Ave
Cedros Ave
San Jose St
Minnehaha St
Hiawatha St
Blackhawk St
Devonshire St
Tuba St
Devonwood Park
Mayall St
Stare St
Vintage St
Willis Ave
Saloma Ave
Wooddale Ave
Stanwin Ave
Arleta Ave
Lev Ave
Minnehaha St
Paxton St
Remick Ave
Weidner St
Louvre St
Filmore St
Vena Ave
Sharp Ave
Daventry St
Montford St
Patrick Ave
Golden State Fwy
I 56 B
5
I-5 N
I-5 S
Mercer St
Bartee Ave
Filmore St
Beachy Ave
Bordeaux Ave
Claretta St
Obeck Ave
Judd St
Buys Blvd

Geosyntec consultants

SITE MAP
SPREADING GROUND
SAN FERNANDO VALLEY, CALIFORNIA

DATE:	**12 DECEMBER 2014**	**FILE NO.**	**FIGURE 2.DOC**
PROPOSAL #:	**N/A**	**FIGURE NO.**	**2**

Google earth

feet 2000

meters 800

2648	12
SCALE 1" = 200'	

2-22-65
730312810
751210813

REVISED
5-4-63
730411
770404809

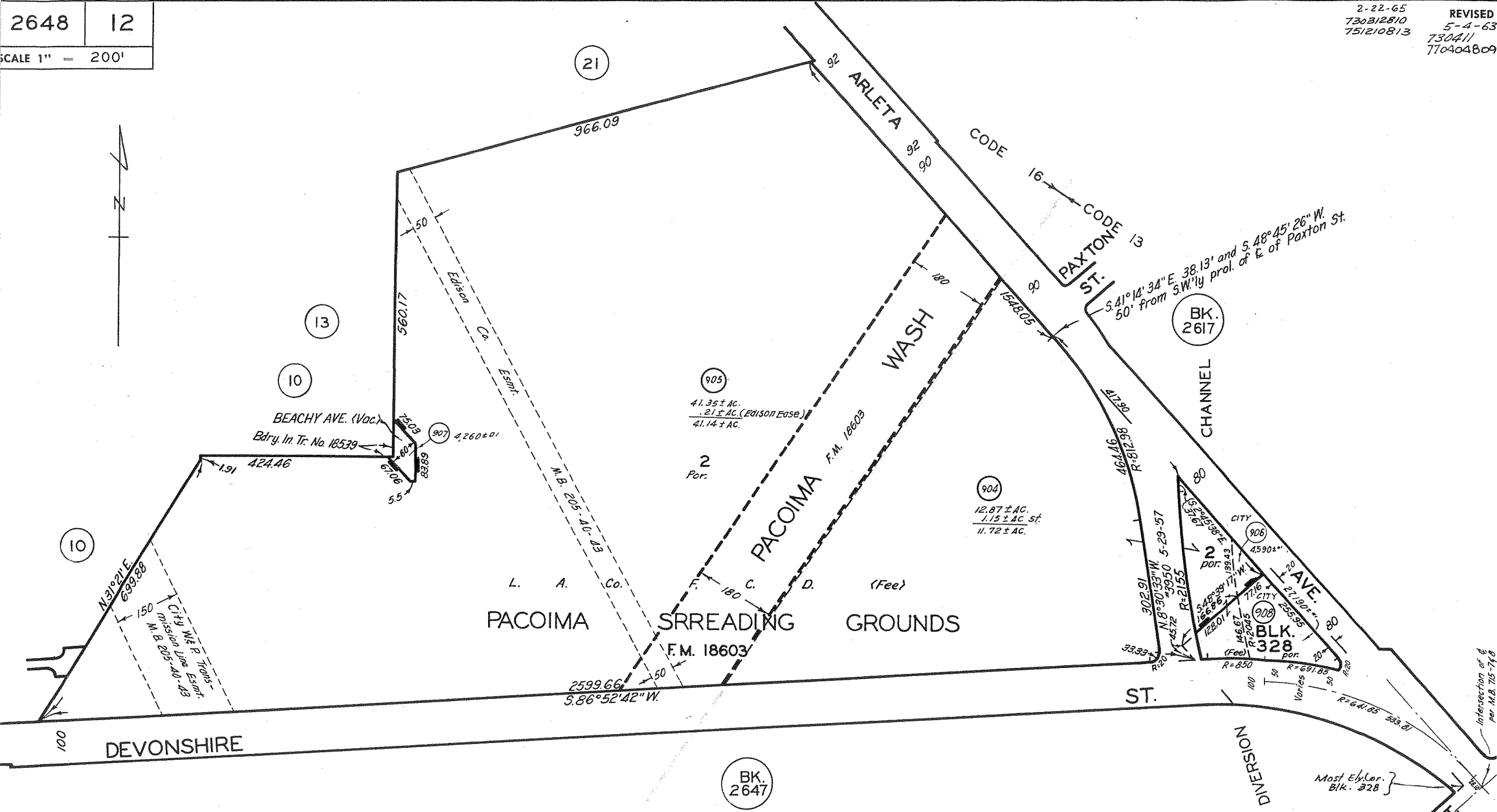

CODE
13
16

THE MACLAY RANCHO
EX MISSION SAN FERNANDO

M. R. 37 - 5 - 16

TRACT NO. 10355

M. B. 205 - 40 - 43

FOR PREV. ASSM'T. SEE:
2648 - 22

ASSESSOR'S MAP
COUNTY OF LOS ANGELES, CALIF.

2647	15
SCALE 1" =	300'

2-22-65

REVISED
3-3-64

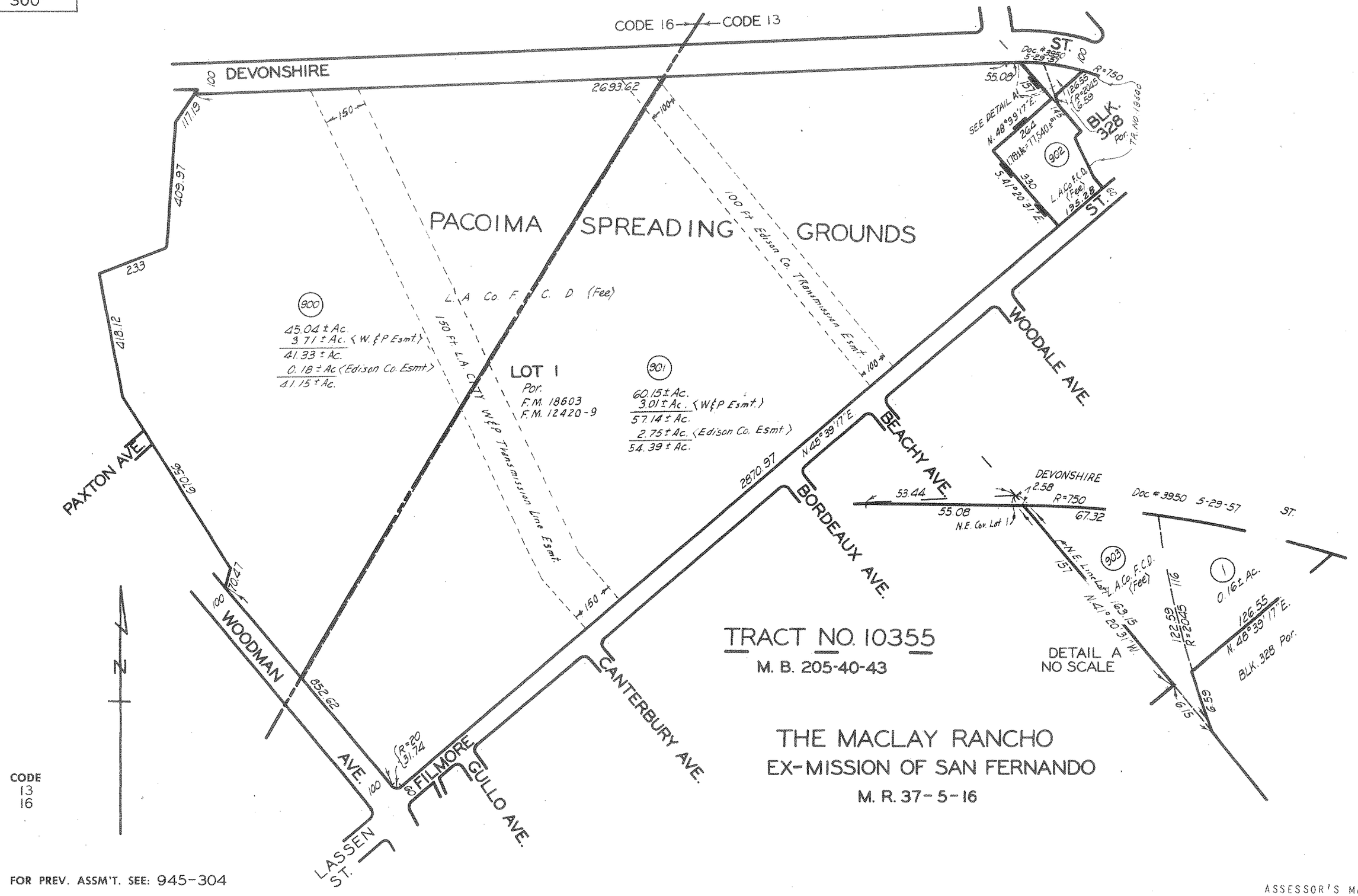

FOR PREV. ASSM'T. SEE: 945-304

ASSESSOR'S MAP
COUNTY OF LOS ANGELES, CALIF.

2617	14
SCALE 1" =	200'

REVISED
2-23-65
4-15-65
5-15-65
6-10-65
700309301
700503515
730416424
731010807
751104
760211301

NORTHERN PORTION OF THE
EX MISSION DE SAN FERNANDO
R.F. 238

THE MACLAY RANCHO
EX MISSION OF SAN FERNANDO
M.R. 37-5-16

TRACT NO. 18537
M.B. 555-1-3

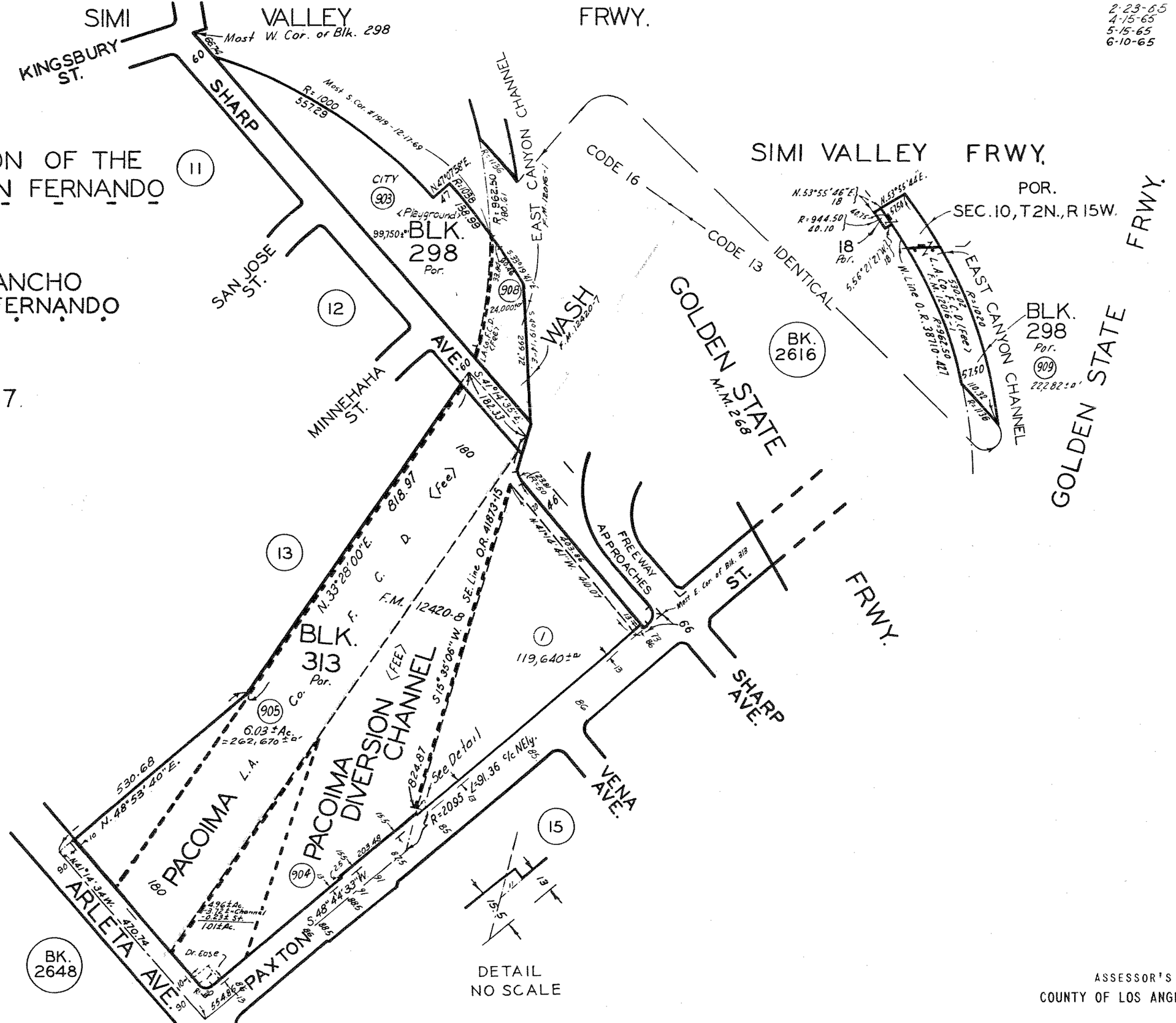

CODE
13
16

FOR PREV. ASSM'T. SEE:
2617-6 & 14

ASSESSOR'S MAP
COUNTY OF LOS ANGELES, CALIF.

Environmental Support Services
Environmental Research & Due Diligence Compliance
30251 Golden Lantern, #E-305, Laguna Niguel, CA 92677
Tel) 949-429-3564 • Fax) 949-429-3563
www.EnvironmentalSupportServices.com • Info@EnvironmentalSupportServices.com

January 23, 2015

County of Los Angeles
Department of Public Health – Public Health Investigator
5555 Ferguson Drive, Ste 120-04
Commerce, CA 90022

Attention: Custodian of Records

Subject: Records Search – Hazardous Materials/Waste/Underground Tanks

Site: "Pacoima Spreading Grounds"
10450 Arleta Avenue
Pacoima, CA 91331

Dear Custodian of Records,

Environmental Support Services (ESS) is in the process of conducting a records search for an environmental audit at a site in Pacoima, CA. This search includes researching the history of the site, especially as it pertains to hazardous materials/waste. With this in mind, **ESS** requests the following information concerning the subject address which your agency may have on file:

1. any unauthorized releases, utilization, manufacture, storage, or discharge of hazardous materials/waste.

2. previous or on-going site investigations/remediations pertaining to hazardous materials/waste.

Should you have any questions concerning this request for information, please call. Your expedient processing of this request is appreciated.

Sincerely,
Environmental Support Services

Shannon Castagno

Shannon Castagno
Project Manager
Shannon@EnvironmentalSupportServices.com

CYNTHIA A. HARDING, M.P.H.
Interim Director

JEFFREY D. GUNZENHAUSER, M.D., M.P.H.
Interim Health Officer

Public Health Investigation Administration
LEOLA MERCADEL
Chief, Public Health Investigation

5555 Ferguson Drive, Suite 120-04
Commerce, California 90022
TEL (323) 890-7801 • FAX (323) 728-0217

www.publichealth.lacounty.gov

BOARD OF SUPERVISORS

Hilda Solis
First District

Mark Ridley-Thomas
Second District

Sheila Kuehl
Third District

Don Knabe
Fourth District

Michael D. Antonovich
Fifth District

January 27, 2015

ENVIRONMENTAL SUPPORT SERVICES
SHANNON CASTAGNO
30251 GOLDEN LANTERN #E-305
LAGUNA NIGUEL, CA 92677

RE: 10450 ARLETA AVE., PACOIMA, CA 91331

I, the undersigned, being the Custodian or the Keeper of Records, certify that a thorough search for the records you requested was carried out under my direction and control.

This search revealed no records.

It should be understood that this does not mean that the records you requested do not exist. It is possible that such records may be misfiled; exist under another spelling, another name, or under another classification. However, with the information furnished to our office, and to the best of our knowledge, no records were located.

If you have any questions regarding your request, please contact our office at (323) 890-7806.

Sincerely,

Thomas Nguyen, Deputy Health Officer
Public Health Investigation

COR ID No.15448

Appendix C

Request for Records Search to the
Department of Toxic Substances Control – Cypress Office and
Response from that Agency

Environmental Support Services

Environmental Research & Due Diligence Compliance
30251 Golden Lantern, #E-305, Laguna Niguel, CA 92677
Tel) 949-429-3564 • Fax) 949-429-3563
www.EnvironmentalSupportServices.com • Info@EnvironmentalSupportServices.com

January 16, 2015

Dept of Toxic Substances Control
Cypress Office
5796 Corporate Avenue
Cypress, CA 90630

Attention: Julie Johnson/Jone Barrio

Dear Julie/Jone,

Please check for any files/information on the following site:

Site: "Pacoima Spreading Grounds"
Located in the northern portion of the San Fernando Valley immediately west of the Pacoima Diversion Channel and near the intersection of Devonshire Street and Arleta Avenue
Pacoima, CA 91331
APN's 2647-015-900 & 901, 2617-014-904 & 905 and 2648-012-904 & 905
(See Attached Maps)

Sincerely,
Environmental Support Services

Shannon Castagno

Shannon Castagno
Project Manager

Pacoima
Spreading
Grounds
Kingsbury St
Clymer St
Germain St
Kester Ave
Bevis Ave
Woodman Ave
Cedros Ave
San Jose St
Minnehaha St
Hiawatha St
Blackhawk St
Devonshire St
Tuba St
Devonwood Park
Mayall St
Stare St
Vintage St
Willis Ave
Saloma Ave
Wooddale Ave
Stanwin Ave
Arleta Ave
Lev Ave
Minnehaha St
Paxton St
Remick Ave
Weidner St
Louvre St
Filmore St
Vena Ave
Sharp Ave
Daventry St
Montford St
Patrick Ave
Golden State Fwy
I 56 B
5
I-5 N
I-5 S
Mercer St
Bartee Ave
Filmore St
Beachy Ave
Bordeaux Ave
Claretta St
Obeck Ave
Judd St
Buys Blvd

Geosyntec consultants

SITE MAP
SPREADING GROUND
SAN FERNANDO VALLEY, CALIFORNIA

DATE:	**12 DECEMBER 2014**	**FILE NO.**	**FIGURE 2.DOC**
PROPOSAL #:	**N/A**	**FIGURE NO.**	**2**

Google earth

feet 2000

meters 800

2648	12
SCALE 1" = 200'	

2-22-65
730312810
751210813

REVISED
5-4-63
730411
770404809

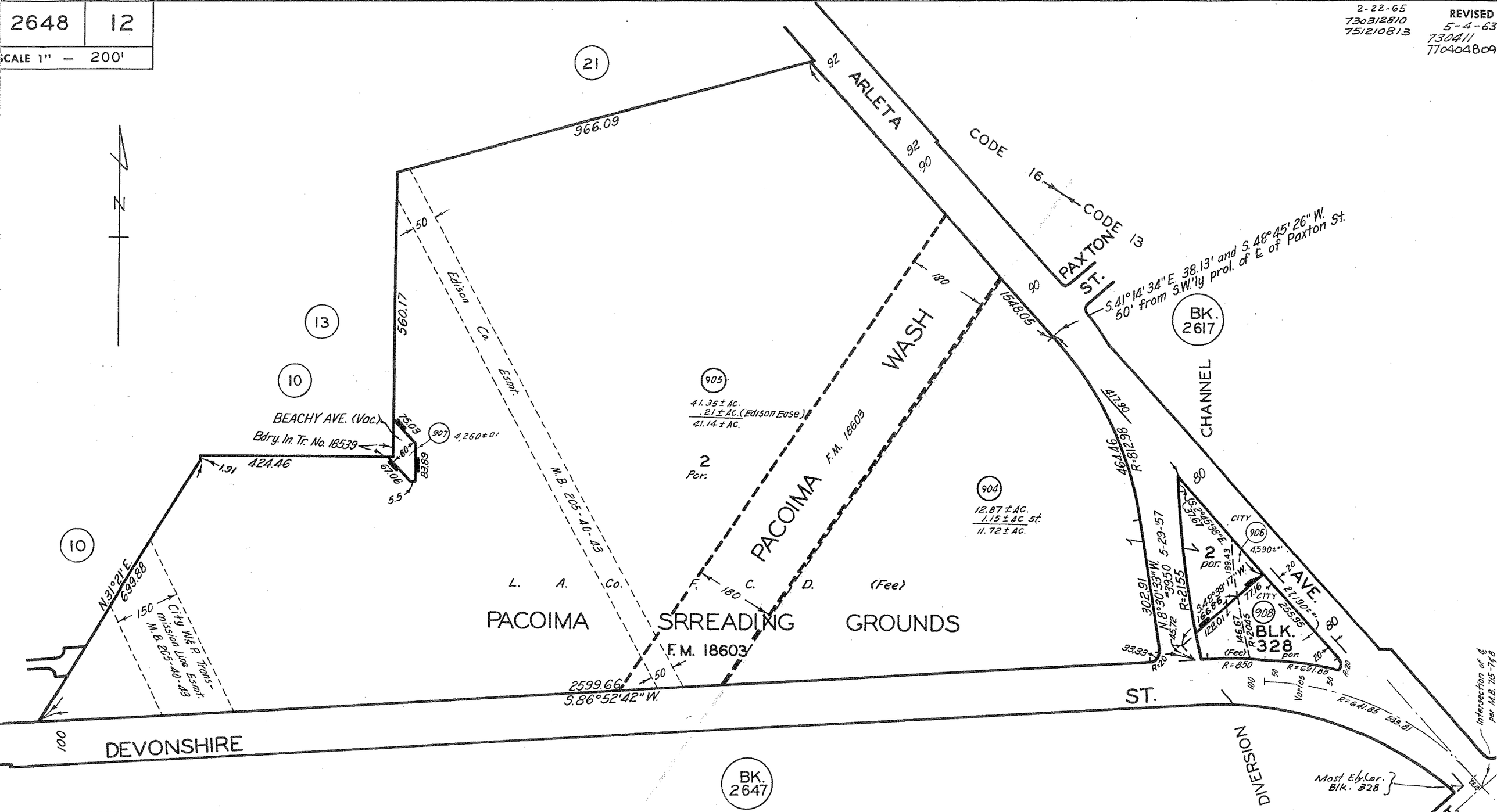

CODE
13
16

THE MACLAY RANCHO
EX MISSION SAN FERNANDO

M. R. 37 - 5 - 16

TRACT NO. 10355

M. B. 205 - 40 - 43

FOR PREV. ASSM'T. SEE:
2648 - 22

ASSESSOR'S MAP
COUNTY OF LOS ANGELES, CALIF.

2647	15
SCALE 1" =	300'

2-22-65

REVISED
3-3-64

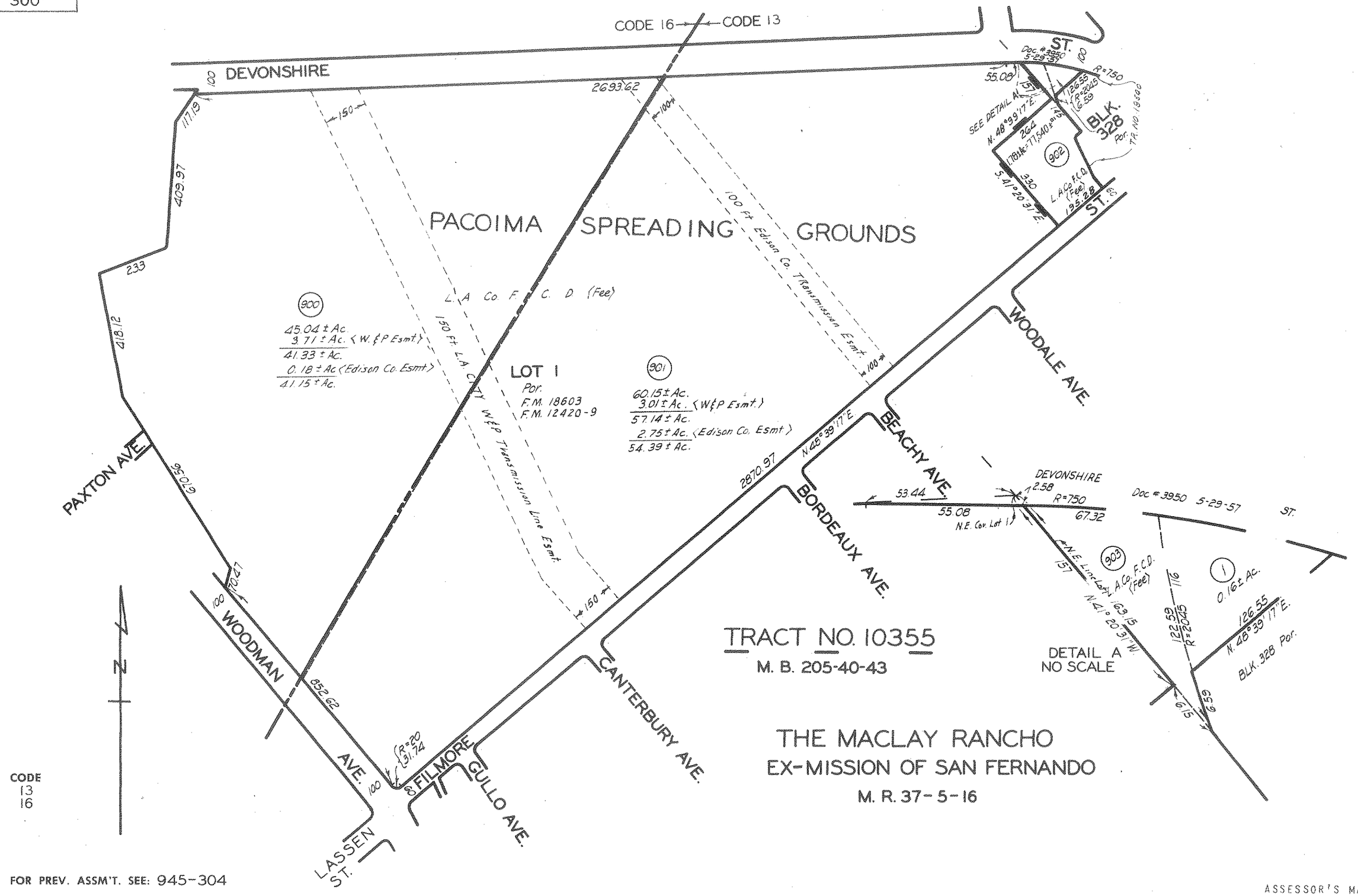

FOR PREV. ASSM'T. SEE: 945-304

ASSESSOR'S MAP
COUNTY OF LOS ANGELES, CALIF.

2617	14
SCALE 1" =	200'

REVISED
2-23-65
4-15-65
5-15-65
6-10-65
700309301
700503515
730416424
731010807
751104
760211301

NORTHERN PORTION OF THE
EX MISSION DE SAN FERNANDO
R.F. 238

THE MACLAY RANCHO
EX MISSION OF SAN FERNANDO
M.R. 37-5-16

TRACT NO. 18537
M.B. 555-1-3

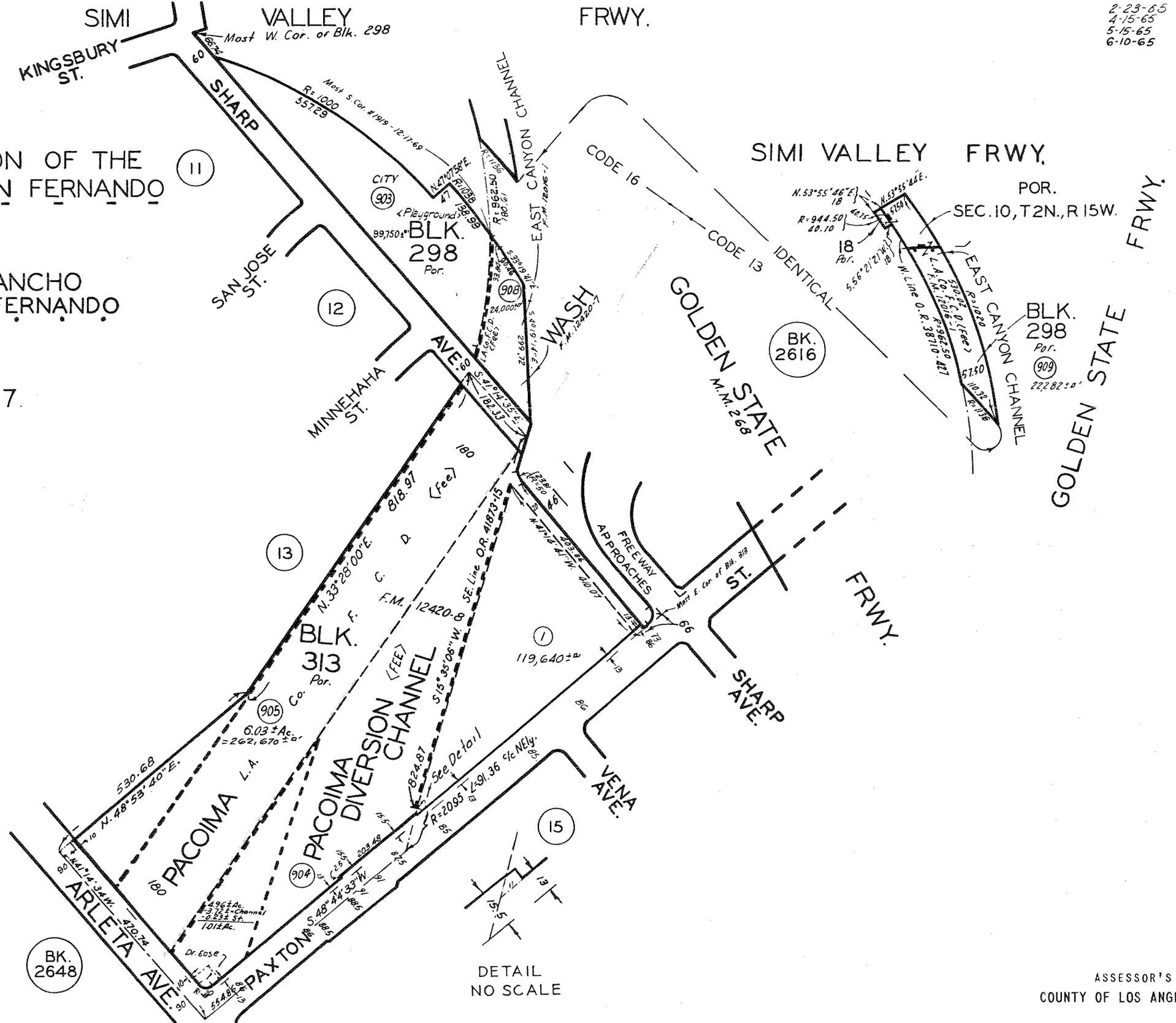

CODE
13
16

FOR PREV. ASSM'T. SEE:
2617-6 & 14

ASSESSOR'S MAP
COUNTY OF LOS ANGELES, CALIF.

Environmental Support Services

Environmental Research & Due Diligence Compliance
30251 Golden Lantern, #E-305, Laguna Niguel, CA 92677
Tel) 949-429-3564 • Fax) 949-429-3563
www.EnvironmentalSupportServices.com • Info@EnvironmentalSupportServices.com

January 23, 2015

Dept of Toxic Substances Control
Cypress Office
5796 Corporate Avenue
Cypress, CA 90630

Attention: Julie Johnson/Jone Barrio

Dear Julie/Jone,

Please check for any files/information on the following site:

Site: "Pacoima Spreading Grounds"
10450 Arleta Avenue
Pacoima, CA 91331

Sincerely,
Environmental Support Services

Shannon Castagno

Shannon Castagno
Project Manager
Shannon@EnvironmentalSupportServices.com

Department of Toxic Substances Control

Matthew Rodriquez
Secretary for
Environmental Protection

Miriam Barcellona Ingenito
Acting Director
5796 Corporate Avenue
Cypress, California 90630

Edmund G. Brown Jr.
Governor

January 27, 2015

Ms. Shannon Castagno
Environmental Support Services
30251 Golden Lantern, #E-305
Laguna Niguel, California 92677

PACOIMA SPREADING GROUNDS, 10450 ARLETA AVENUE,
PACOIMA, CALIFORNIA 91331
PR401231502

Dear Ms. Castagno:

The Department of Toxic Substances Control has received your fax/letter to review records, under the Public Records Act.

After a thorough review of our files we have found that no such records exist at this office pertaining to the site/facility reference above.

We would like to inform you about Envirostor, a database that provides information and documents on over 5,000 DTSC cleanup sites. EnviroStor can be accessed at: **http://www.envirostor.dtsc.ca.gov/public**. Also, a computer is available in the Central Files of each DTSC Regional Office for use by community members to view EnviroStor.

If you have any questions, or would like further information regarding your request, Please contact our Regional Records Coordinator at: (714) 484-5336.

Sincerely,

Jone Barrio
Regional Records Coordinator
Cypress Administrative Services

brm

Printed on Recycled Paper

Appendix D

Request for Records Search to the
Department of Toxic Substances Control – Chatsworth Office and
Response from that Agency

Environmental Support Services

Environmental Research & Due Diligence Compliance
30251 Golden Lantern, #E-305, Laguna Niguel, CA 92677
Tel) 949-429-3564 • Fax) 949-429-3563
www.EnvironmentalSupportServices.com • Info@EnvironmentalSupportServices.com

January 16, 2015

Dept of Toxic Substances Control
Chatsworth Office
9211 Oakdale Avenue
Chatsworth, CA

Attention: Vivien/File Room

Dear Vivien,

Please check for any files/information on the following site:

Site: "Pacoima Spreading Grounds"
Located in the northern portion of the San Fernando Valley immediately west of the Pacoima Diversion Channel and near the intersection of Devonshire Street and Arleta Avenue
Pacoima, CA 91331
APN's 2647-015-900 & 901, 2617-014-904 & 905 and 2648-012-904 & 905
(See Attached Maps)

Sincerely,
Environmental Support Services

Shannon Castagno

Shannon Castagno
Project Manager
Shannon@EnvironmentalSupportServices.com

Pacoima
Spreading
Grounds
Kingsbury St
Clymer St
Germain St
Kester Ave
Bevis Ave
Woodman Ave
Cedros Ave
San Jose St
Minnehaha St
Hiawatha St
Blackhawk St
Devonshire St
Tuba St
Devonwood Park
Mayall St
Stare St
Vintage St
Willis Ave
Saloma Ave
Wooddale Ave
Stanwin Ave
Arleta Ave
Lev Ave
Minnehaha St
Paxton St
Remick Ave
Weidner St
Louvre St
Filmore St
Vena Ave
Sharp Ave
Daventry St
Montford St
Patrick Ave
Golden State Fwy
I 56 B
5
I-5 N
I-5 S
Mercer St
Bartee Ave
Filmore St
Beachy Ave
Bordeaux Ave
Claretta St
Obeck Ave
Judd St
Buys Blvd

Geosyntec consultants

SITE MAP
SPREADING GROUND
SAN FERNANDO VALLEY, CALIFORNIA

DATE:	**12 DECEMBER 2014**	**FILE NO.**	**FIGURE 2.DOC**
PROPOSAL #:	**N/A**	**FIGURE NO.**	**2**

Google earth

feet 2000

meters 800

2648	12
SCALE 1" = 200'	

2-22-65
730312810
751210813

REVISED
5-4-63
730411
770404809

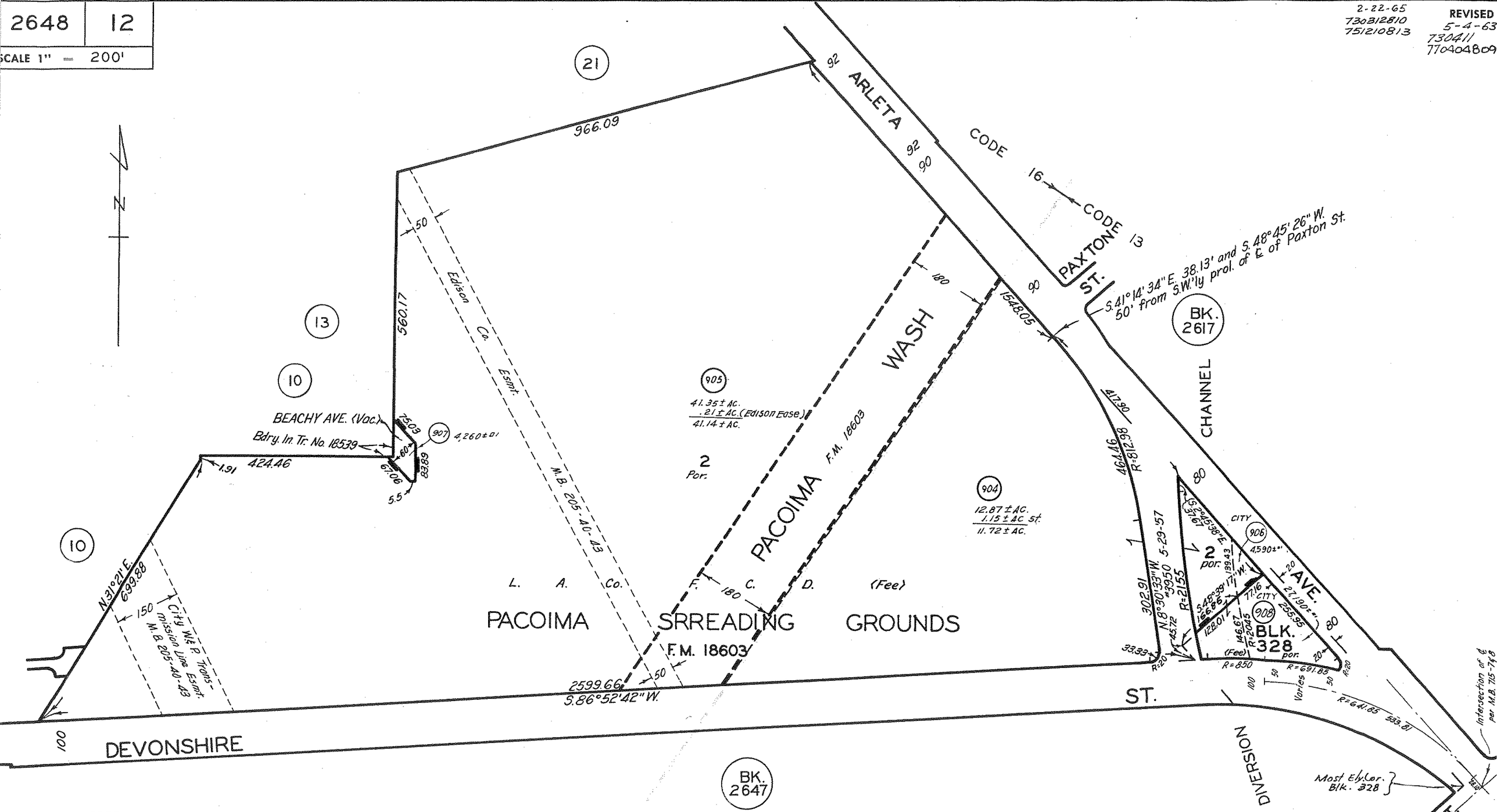

CODE
13
16

THE MACLAY RANCHO
EX MISSION SAN FERNANDO

M. R. 37 - 5 - 16

TRACT NO. 10355

M. B. 205 - 40 - 43

FOR PREV. ASSM'T. SEE:
2648 - 22

ASSESSOR'S MAP
COUNTY OF LOS ANGELES, CALIF.

2647	15
SCALE 1" =	300'

2-22-65

REVISED
3-3-64

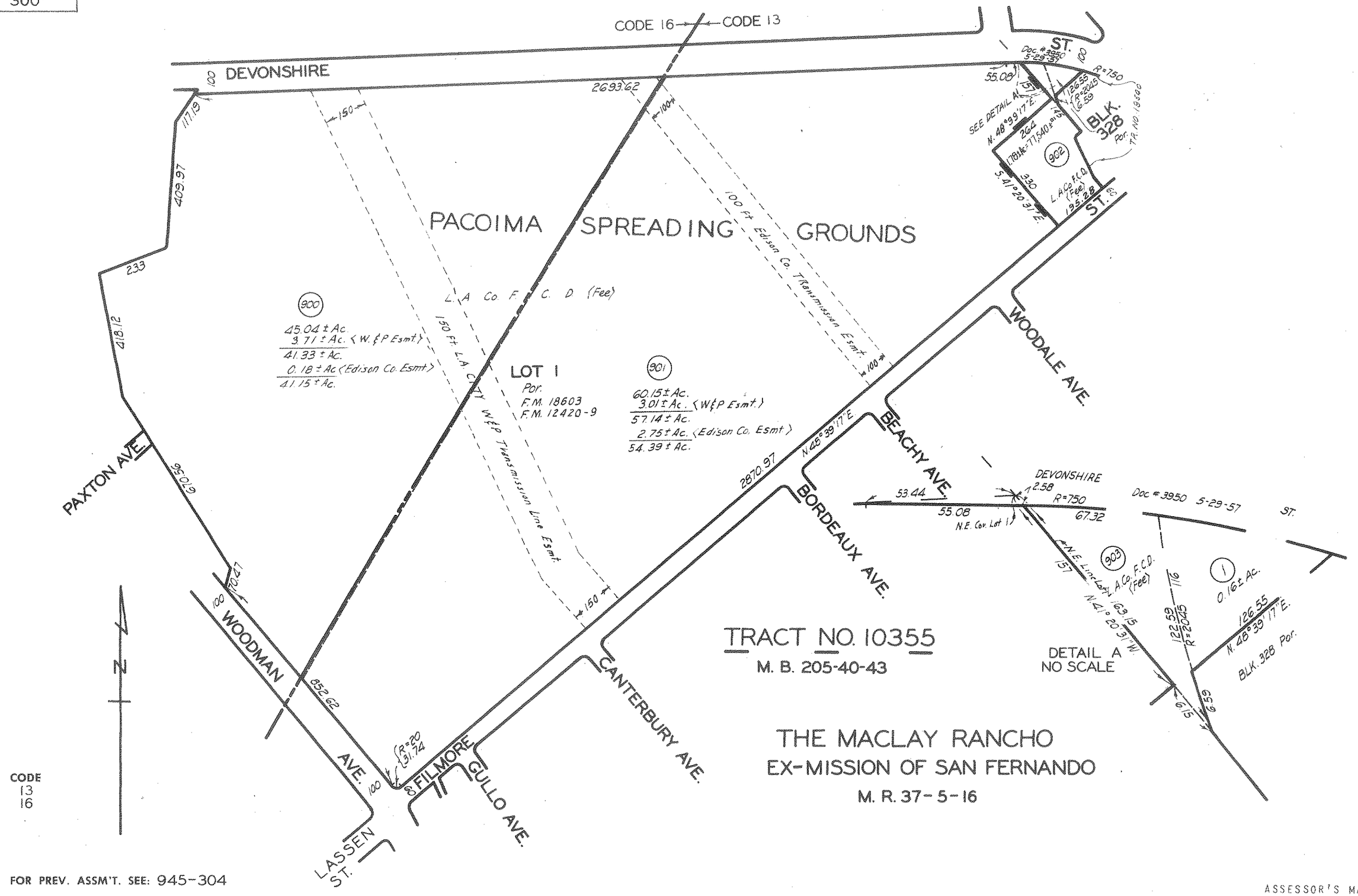

FOR PREV. ASSM'T. SEE: 945-304

ASSESSOR'S MAP
COUNTY OF LOS ANGELES, CALIF.

2617	14
SCALE 1" =	200'

REVISED
2-23-65
4-15-65
5-15-65
6-10-65
700309301
700503515
730416424
731010807
751104
760211301

NORTHERN PORTION OF THE
EX MISSION DE SAN FERNANDO
R.F. 238

THE MACLAY RANCHO
EX MISSION OF SAN FERNANDO
M.R. 37-5-16

TRACT NO. 18537
M.B. 555-1-3

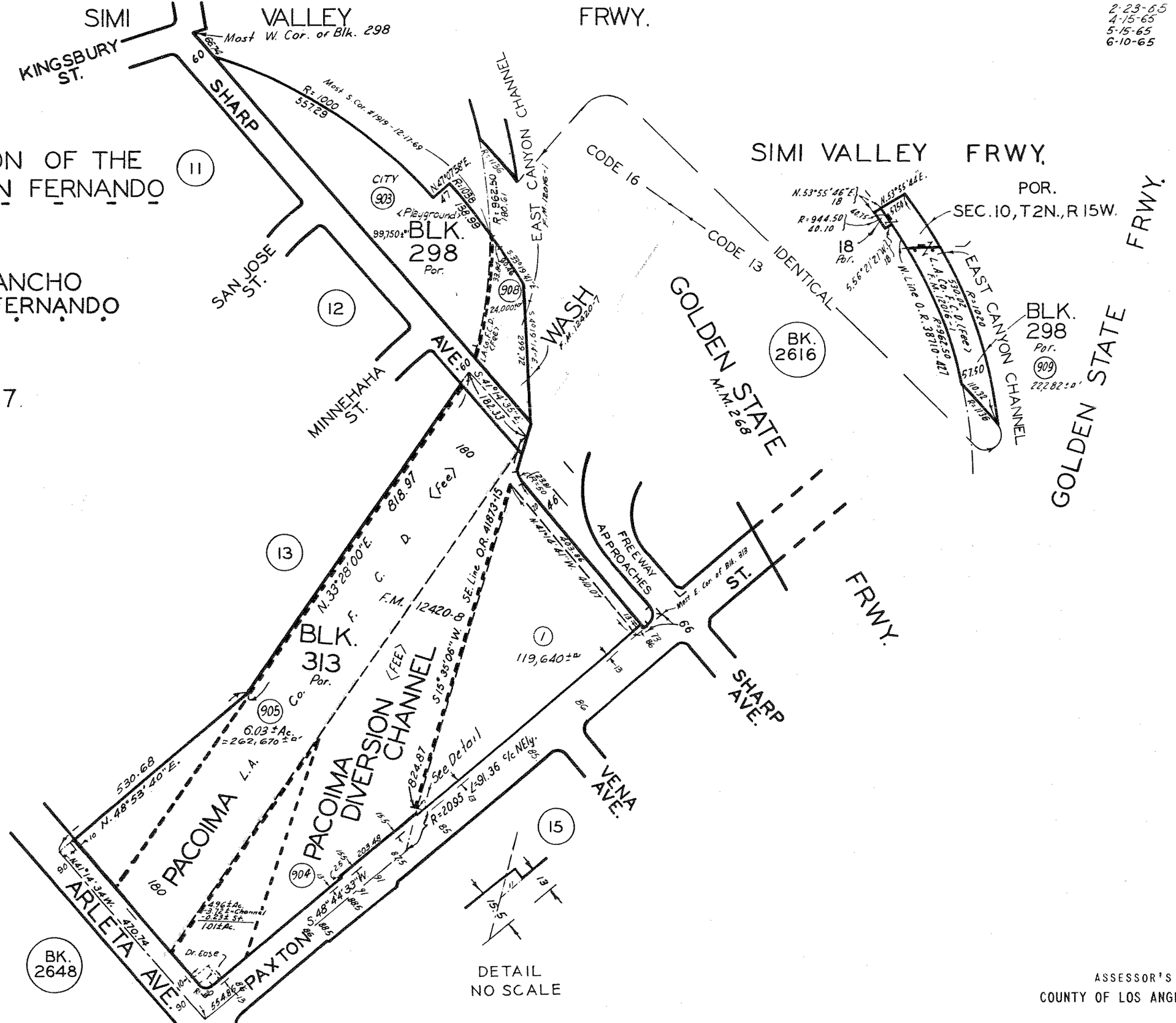

CODE
13
16

FOR PREV. ASSM'T. SEE:
2617-6 & 14

ASSESSOR'S MAP
COUNTY OF LOS ANGELES, CALIF.

Environmental Support Services

Environmental Research & Due Diligence Compliance
30251 Golden Lantern, #E-305, Laguna Niguel, CA 92677
Tel) 949-429-3564 • Fax) 949-429-3563
www.EnvironmentalSupportServices.com • Info@EnvironmentalSupportServices.com

January 23, 2015

Dept of Toxic Substances Control
Chatsworth Office
9211 Oakdale Avenue
Chatsworth, CA

Attention: Vivien/File Room

Dear Vivien,

Please check for any files/information on the following site:

Site: "Pacoima Spreading Grounds"
10450 Arleta Avenue
Pacoima, CA 91331

Sincerely,
Environmental Support Services

Shannon Castagno

Shannon Castagno
Project Manager
Shannon@EnvironmentalSupportServices.com

Department of Toxic Substances Control

Matthew Rodriquez
Secretary for
Environmental Protection

Barbara A. Lee, Director
9211 Oakdale Avenue
Chatsworth, California 91311

Edmund G. Brown Jr.
Governor

January 30, 2015

Ms. Shannon Castagno
Environmental Support Services
30251 Golden Lantern, #E-305
Laguna Niguel, CA 92677

"Pacoima Spreading Grounds", 10450 Arleta Avenue, Pacoima, CA 91331
PR3-012715-02

Dear Ms. Castagno:

We have received your Public Records Act Request for records from the Department of Toxic Substances Control.

After a thorough review of our files we have found that no such records exist at this office pertaining to the site/facility referenced above.

We would like to inform you about Envirostor, a database that provides information and documents on over 5,000 DTSC cleanup sites. EnviroStor can be accessed at: http://www.envirostor.dtsc.ca.gov/public. Also, a computer is available in the Central Files of each DTSC Regional Office for use by community members to view EnviroStor.

If you have any questions, would like further information regarding your request or would like an appointment to visit Chatsworth's Central Files, please contact me at (818) 717-6522.

Sincerely,

Glenn Castillo/cs
Regional Records Coordinator

Printed on Recycled Paper

Appendix E

Photocopies Obtained from the
City of Los Angeles Fire Department – Hazardous Materials Unit

City of LOS ANGELES
CALIFORNIA

LOS ANGELES FIRE DEPARTMENT
200 NORTH MAIN STREET
LOS ANGELES, CA 90012
(213) 978-3680

Business No.: FA0019353

Business Name: LA COUNTY - DEPT OF PUBLIC WORKS

Business Mailing Address: 10179 GLENOAKS BL
SUN VALLEY, CA 91352

Storage Address: 10450 N ARLETA AVE

Date:

Last Inspection Date:

Permit Date: 07/01/2014

RFI Request No:

RFI Requestor Name:

Chemical & Ingredients	Haz. Mat. Type	Max. Qnt on hand:	Yearly Qnt	Product Storage Type	Physical State
UNLEADED GASOLINE	a	250	500		b
- -		0	0		
UNLEADED GASOLINE	a	250	500		b
- -		0	0		

Appendix F

Request for Records Search to the
City of Los Angeles Public Works – Industrial Waste and
Response from that Agency

Environmental Support Services

Environmental Research & Due Diligence Compliance
30251 Golden Lantern, #E-305, Laguna Niguel, CA 92677
Tel) 949-429-3564 • Fax) 949-429-3563
www.EnvironmentalSupportServices.com • Info@EnvironmentalSupportServices.com

January 23, 2015

Los Angeles City Public Works

Attention: Industrial Waste Unit

Subject: Records Search – Hazardous Materials/Waste

Site: "Pacoima Spreading Grounds"
10450 Arleta Avenue
Pacoima, CA 91331

To Whom It May Concern:

Environmental Support Services (ESS) is in the process of conducting a records search for an environmental audit at a site in North Hollywood, CA. This search includes researching the history of the site, especially as it pertains to hazardous materials/waste. With this in mind, **ESS** requests the following information concerning the subject address which your agency may have on file:

1. copies of applications and permits for industrial waste discharge; and

2. copies of any and all violations concerning industrial waste discharge.

Should you have any questions concerning this request for information, please call. Your expedient processing of this request is appreciated. THANK YOU!

Sincerely,
Environmental Support Services

Shannon Castagno

Shannon Castagno
Project Manager
Shannon@EnvironmentalSupportServices.com

CITY OF LOS ANGELES

CALIFORNIA

BOARD OF PUBLIC WORKS
MEMBERS

KEVIN JAMES
PRESIDENT

MONICA RODRIGUEZ
VICE PRESIDENT

MATT SZABO
PRESIDENT PRO TEMPORE

MICHAEL R. DAVIS
COMMISSIONER

BARBARA ROMERO
COMMISSIONER

ERIC GARCETTI
MAYOR

BUREAU OF SANITATION

ENRIQUE C. ZALDIVAR
DIRECTOR

TRACI J. MINAMIDE
CHIEF OPERATING OFFICER

VAROUJ S. ABKIAN
ADEL H. HAGEKHALIL
ALEXANDER E. HELOU
ASSISTANT DIRECTORS

VACANT
CHIEF FINANCIAL OFFICER

INDUSTRIAL WASTE
MANAGEMENT DIVISION
2714 MEDIA CENTER DRIVE
LOS ANGELES, CA 90065
OFFICE: (323) 342-6200
FAX: (323) 342-6111

27-Jan-15

Shannon Castagno

Environmental Support Services

30251 Golden Lantern, #E-305

Laguna Niguel, CA. 92677

INDUSTRIAL WASTE DISCHARGE PERMIT INFORMATION

Your request to research our files for Industrial Waste Discharge permit information was done by my staff. Our records show the following findings:

No permit on file for 10450 Arleta Ave., Pacoima, CA. 91331

The cost of generating this report is **$1.00**

Please remit a check in the above amount payable to "Department of Public Works" and mail to:

Bureau of Sanitation

Industrial Waste Management Division

2714 Media Center Drive

Los Angeles, CA 90065

Attn: Admin Inspection Group

If you have any questions, please contact Ramy Sharobeem of my staff at (323) 342-6064.

Sincerely,

ENRIQUE C. ZALDIVAR, Director

Bureau of Sanitation

By: Bellete W. Yohannes

Bellete Yohannes, Chief Env. Compliance Inspector II

Industrial Waste Management Division

C: Attachment [ ] yes [X] no

Ramy Sharobeem

Appendix G

Request for Records Search to the
South Coast Air Quality Management District and
Response from that Agency

South Coast
Air Quality Management District
21865 Copley Drive, Diamond Bar, CA 91765-4178
(909) 396-2000 • www.aqmd.gov

Information Management
Public Records Unit

Direct Dial: (909) 396-3700
FAX: (909) 396-3330

PUBLIC RECORDS REQUEST FORM

PRU Office Use Only
CONTROL NUMBER

ATTENTION REQUESTOR: To expedite your request for District records, please fill out this form completely, and identify specifically the type of records you are requesting. Please limit your request to one facility or one site address for each request form filed, and three requested items per form. Additional forms or pages can be used if requesting information for more than one facility or for records not identified on this form. Requests should reasonably describe identifiable records prepared, owned, used, or retained by the District. Public Records Unit staff is available to assist you in identifying those records in the District's possession. The District is not required by law to create a new record or list from an existing record.

REQUESTOR INFORMATION

NAME: Shannon Castagno		DATE: 1/23/15
COMPANY: Environmental Support Services		
MAILING ADDRESS: 30251 Golden Lantern, #E305		
CITY: Laguna Niguel	STATE: CA	ZIP CODE: 92677
PHONE NUMBER: (949) 429-3564	FAX NUMBER: (949) 429-3563	
EMAIL ADDRESS: Shannon@EnvironmentalSupportServices.com		

REQUESTED RECORDS (*3 items per form*)

☐ Applications (APPLS)	☐ Complaints	☐ Asbestos Notifications/Records
x Permits to Operate (P/O)	☐ Site Inspection Reports (I/R)	☐ Facility Potential to Emit (PTE)
x Equipment List Report (EQL)	☐ Emissions Summary	☐ Facility Positive Balance (NSR)
x Notices of Violation (NOV)	☐ Source Test Reports (S/T RPTS)	☐ Toxic-Health Risk Assessment (HRA)
☐ Notices to Comply (N/C)	☐ Air Monitoring Data	☐ Other (describe below or on additional pages):

TIME PERIOD OF DOCUMENTS REQUESTED From: **ALL** To:

REQUESTED FACILITY INFORMATION (If Applicable)

FACILITY NAME:	Pacoima Spreading Grounds		
FACILITY ADDRESS:	10450 Arleta Avenue		
CITY:	Pacoima	STATE: CA	ZIP CODE: 91331
FACILITY I.D. NO. (if known):	APPL. AND/OR PERMIT NO. (if known):		

***Direct cost of duplication**: $.15 per page for paper copies (first 10 pages free) and $5.00 per copied audio tape. No charge for copied Diskettes or CDs. Transfer of gathered electronic records onto CD or Diskette typically costs $10.00 each, but costs will vary (see Instructions for Requesting Records).*

☐ I wish to inspect the requested records, where applicable, or receive the requested records electronically at no charge. I do not want copies produced at this time.

☐ I request that the SCAQMD contact me prior to copying the requested records if the cost exceeds $20.00.

x I would like copies of the requested records and I hereby agree to reimburse the SCAQMD for the direct cost of duplicationin accordance with Gov. Code Sec. 6253(b).

Shannon Castagno
Signature of Requestor

Note: After a preliminary estimate, advance payment may be required.

(Rev. 06/17/08-lkoenig)

Information Management
Public Records Unit

Direct Dial (909) 396-3700
Fax:(909) 396-3330

COMPLETION LETTER

January 30, 2015

SHANNON CASTAGNO
ENVIRONMENTAL SUPPORT SERVICES
30251 GOLDEN LANTERN # E-305
LAGUNA NIGUEL, CA 92677

Ref.: CONTROL NO. 79697
Received 1/27/2015

Re: P/O'S, EQL'S & N/C'S FOR PACOIMA SPREADING GROUNDS, AT 10450 ARLETA AVENUE, PACOIMA, CA 91331.

After a thorough search of this agency's records:

NO REQUESTED RECORDS WERE FOUND FOR THE ABOVE-REFERENCED FACILITY OR FACILITY SITE.

If you have any questions, please do not hesitate to contact me, Tuesday through Friday, **8:00 a.m**. to **4:30 p.m.**

Sincerely,

ELIZABETH GONZALEZ x2311
For Colleen Paine
Public Records Coordinator

:eg

Appendix H

Request for Records Search to the
Regional Water Quality Control Board – Los Angeles Region and
Response from that Agency

Environmental Support Services

Environmental Research & Due Diligence Compliance
30251 Golden Lantern, #E-305, Laguna Niguel, CA 92677
Tel) 949-429-3564 • Fax) 949-429-3563
www.EnvironmentalSupportServices.com • Info@EnvironmentalSupportServices.com

January 16, 2015

Regional Water Quality Control Board
Los Angeles Region
320 West 4th Street, Ste 200
Los Angeles, CA 91406

Attention: LUST/WIP/SLIC/Site Mitigation Divisions

Dear Personnel,

Please check for any files/information on the following sites:

Site: "Pacoima Spreading Grounds"
Located in the northern portion of the San Fernando Valley immediately west of the Pacoima Diversion Channel and near the intersection of Devonshire Street and Arleta Avenue
Pacoima, CA 91331
APN's 2647-015-900 & 901, 2617-014-904 & 905 and 2648-012-904 & 905
(See Attached Maps)

I would like to set up an appointment to review this file **as soon as possible**. Anything you can do to expedite this request would be greatly appreciated. Please call me at (949) 429-3564. Thanks!

Sincerely,
Environmental Support Services

Shannon Castagno

Shannon Castagno
Project Manager

Pacoima
Spreading
Grounds
Kingsbury St
Clymer St
Germain St
Kester Ave
Bevis Ave
Woodman Ave
Cedros Ave
San Jose St
Minnehaha St
Hiawatha St
Blackhawk St
Devonshire St
Tuba St
Devonwood Park
Mayall St
Stare St
Vintage St
Willis Ave
Saloma Ave
Wooddale Ave
Stanwin Ave
Arleta Ave
Lev Ave
Minnehaha St
Paxton St
Remick Ave
Weidner St
Louvre St
Filmore St
Vena Ave
Sharp Ave
Daventry St
Montford St
Patrick Ave
Golden State Fwy
I 56 B
5
I-5 N
I-5 S
Mercer St
Bartee Ave
Filmore St
Beachy Ave
Bordeaux Ave
Claretta St
Obeck Ave
Judd St
Buys Blvd

Geosyntec consultants

SITE MAP
SPREADING GROUND
SAN FERNANDO VALLEY, CALIFORNIA

DATE:	**12 DECEMBER 2014**	**FILE NO.**	**FIGURE 2.DOC**
PROPOSAL #:	**N/A**	**FIGURE NO.**	**2**

Google earth

feet 2000

meters 800

2648	12
SCALE 1" = 200'	

2-22-65
730312810
751210813

REVISED
5-4-63
730411
770404809

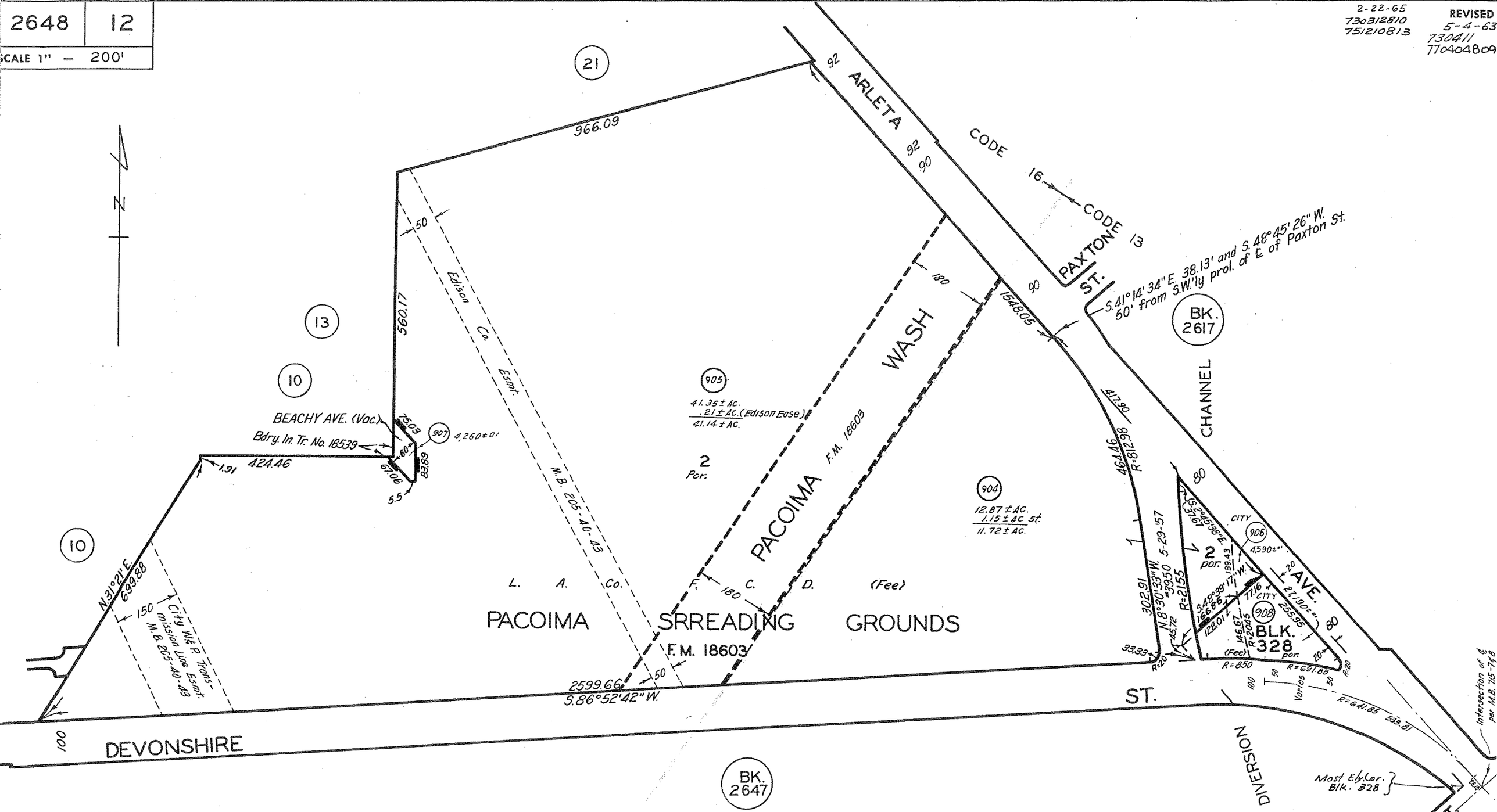

CODE
13
16

THE MACLAY RANCHO
EX MISSION SAN FERNANDO

M. R. 37 - 5 - 16

TRACT NO. 10355

M. B. 205 - 40 - 43

FOR PREV. ASSM'T. SEE:
2648 - 22

ASSESSOR'S MAP
COUNTY OF LOS ANGELES, CALIF.

2647	15
SCALE 1" =	300'

2-22-65

REVISED
3-3-64

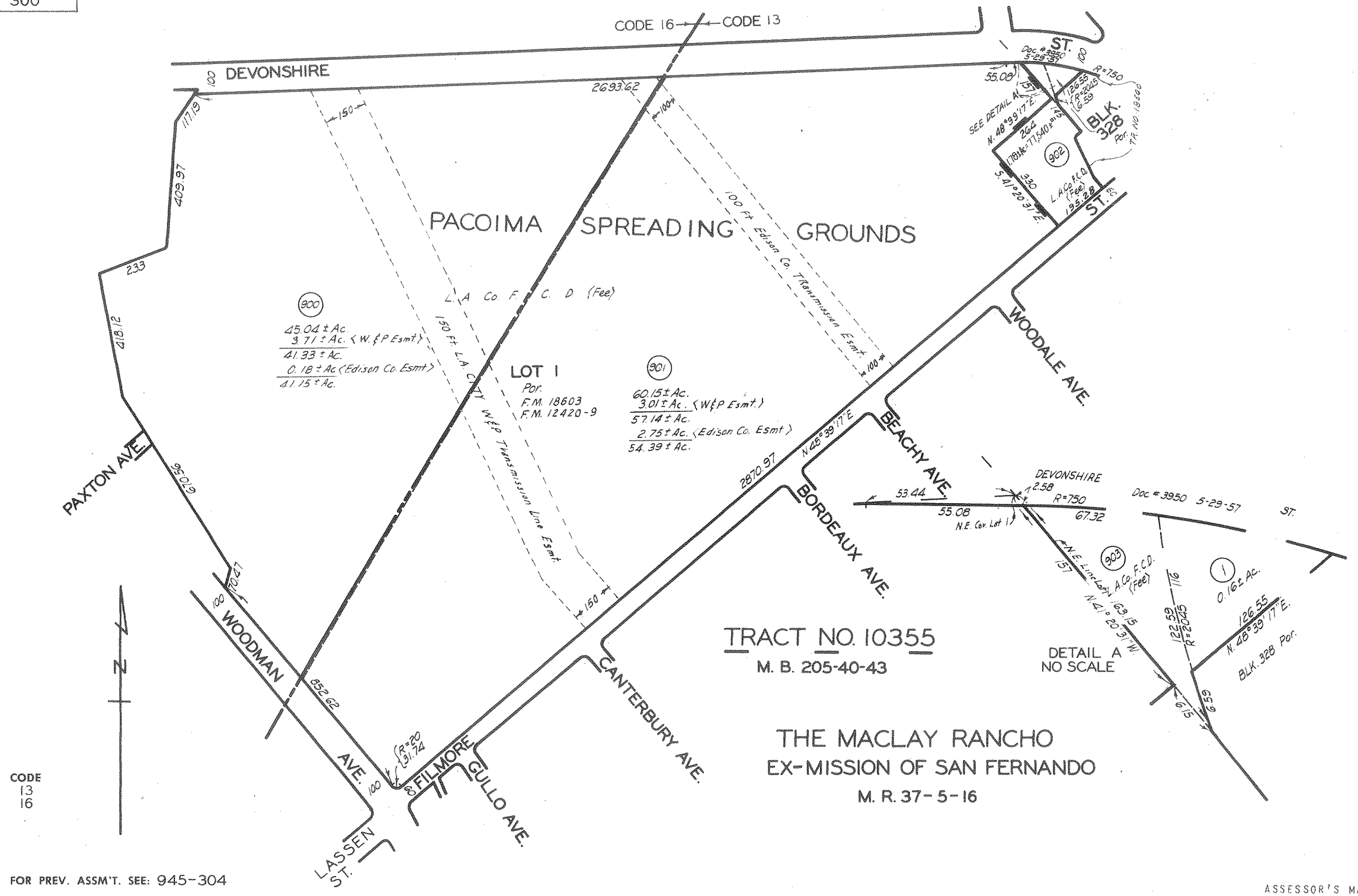

FOR PREV. ASSM'T. SEE: 945-304

ASSESSOR'S MAP
COUNTY OF LOS ANGELES, CALIF.

2617	14
SCALE 1" =	200'

REVISED
2-23-65
4-15-65
5-15-65
6-10-65
700309301
700503515
730416424
731010807
751104
760211301

NORTHERN PORTION OF THE
EX MISSION DE SAN FERNANDO
R.F. 238

THE MACLAY RANCHO
EX MISSION OF SAN FERNANDO
M.R. 37-5-16

TRACT NO. 18537
M.B. 555-1-3

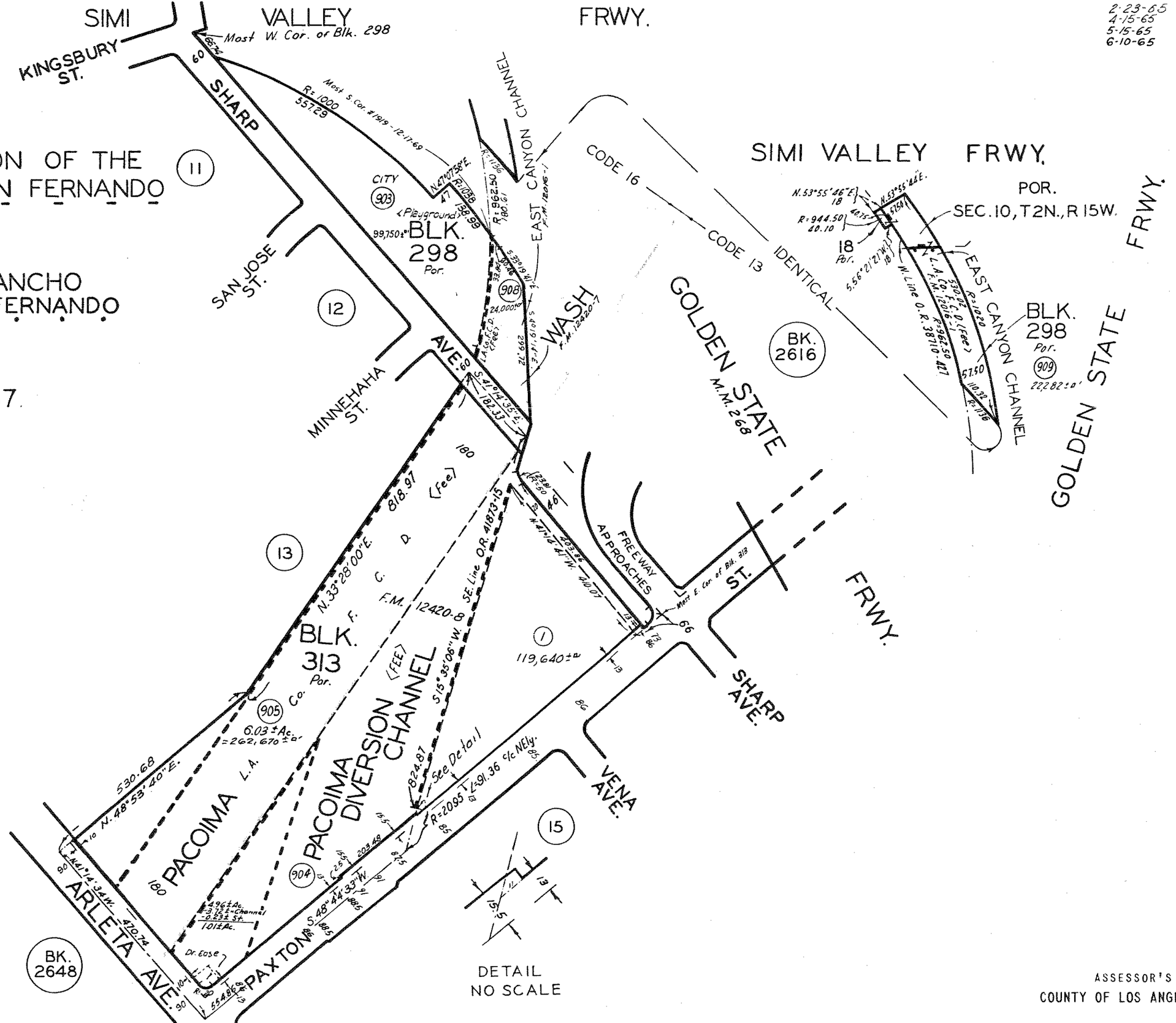

CODE
13
16

FOR PREV. ASSM'T. SEE:
2617-6 & 14

ASSESSOR'S MAP
COUNTY OF LOS ANGELES, CALIF.

Environmental Support Services

Environmental Research & Due Diligence Compliance
30251 Golden Lantern, #E-305, Laguna Niguel, CA 92677
Tel) 949-429-3564 • Fax) 949-429-3563
www.EnvironmentalSupportServices.com • Info@EnvironmentalSupportServices.com

January 23, 2015

Regional Water Quality Control Board
Los Angeles Region
320 West 4th Street, Ste 200
Los Angeles, CA 91406

Attention: LUST/WIP/SLIC/Site Mitigation Divisions

Dear Personnel,

Please check for any files/information on the following sites:

Site: "Pacoima Spreading Grounds"
10450 Arleta Avenue
Pacoima, CA 91331

I would like to set up an appointment to review this file **as soon as possible**. Anything you can do to expedite this request would be greatly appreciated. Please call me at
(949) 429-3564. Thanks!

Sincerely,
Environmental Support Services

Shannon Castagno

Shannon Castagno
Project Manager
Shannon@EnvironmentalSupportServices.com

From: Villar, Rosie@Waterboards [Rosie.Villar@waterboards.ca.gov] on behalf of WB-RB4-PublicRecords [RB4-PublicRecords@waterboards.ca.gov]
Sent: Monday, January 26, 2015 2:51 PM
To: shannon@environmentalsupportservices.com
Cc: WB-RB4-PublicRecords
Subject: File Review Request/Tracking No 2015012020

********* Please submit future file review requests to the LARWQCB via e-mail to RB4-publicrecords@waterboards.ca.gov.*******

Thank you for your request to review Regional Board records concerning the property on:

- Pacoima Spreading Grounds

The Regional Board has reviewed its files and has concluded that it does not have any records that are responsive to your request.

Thank you,

Rosie Villar
Associate Governmental Program Analyst
Regional Water Quality Control Board
Los Angeles Region

From: Villar, Rosie@Waterboards [Rosie.Villar@waterboards.ca.gov] on behalf of WB-RB4-PublicRecords [RB4-PublicRecords@waterboards.ca.gov]
Sent: Monday, February 02, 2015 1:25 PM
To: shannon@environmentalsupportservices.com
Cc: WB-RB4-PublicRecords
Subject: File Review Request/Tracking No 2015012614

********* Please submit future file review requests to the LARWQCB via e-mail to RB4-publicrecords@waterboards.ca.gov.*******

Thank you for your request to review Regional Board records concerning the property on:

- 10450 Arleta Ave., Pacoima

The Regional Board has reviewed its files and has concluded that it does not have any records that are responsive to your request.

Thank you,

Rosie Villar
Associate Governmental Program Analyst
Regional Water Quality Control Board
Los Angeles Region

APPENDIX D
HISTORICAL AERIAL PHOTOGRAPHS

Pacoima Spreading Grounds Lacfcd Site
Intersection of Devonshire Street & Arleta Ave
Mission Hills, Los A, CA 91345

Inquiry Number: 4185299.9
January 23, 2015

The EDR Aerial Photo Decade Package

6 Armstrong Road, 4th Floor
Shelton, Connecticut 06484
Toll Free: 800.352.0050
www.edrnet.com

EDR Aerial Photo Decade Package

Environmental Data Resources, Inc. (EDR) Aerial Photo Decade Package is a screening tool designed to assist environmental professionals in evaluating potential liability on a target property resulting from past activities. EDR's professional researchers provide digitally reproduced historical aerial photographs, and when available, provide one photo per decade.

When delivered electronically by EDR, the aerial photo images included with this report are for ONE TIME USE ONLY. Further reproduction of these aerial photo images is prohibited without permission from EDR. For more information contact your EDR Account Executive.

Thank you for your business.
Please contact EDR at 1-800-352-0050
with any questions or comments.

Disclaimer - Copyright and Trademark Notice

This Report contains certain information obtained from a variety of public and other sources reasonably available to Environmental Data Resources, Inc. It cannot be concluded from this Report that coverage information for the target and surrounding properties does not exist from other sources. **NO WARRANTY EXPRESSED OR IMPLIED, IS MADE WHATSOEVER IN CONNECTION WITH THIS REPORT. ENVIRONMENTAL DATA RESOURCES, INC. SPECIFICALLY DISCLAIMS THE MAKING OF ANY SUCH WARRANTIES, INCLUDING WITHOUT LIMITATION, MERCHANTABILITY OR FITNESS FOR A PARTICULAR USE OR PURPOSE. ALL RISK IS ASSUMED BY THE USER. IN NO EVENT SHALL ENVIRONMENTAL DATA RESOURCES, INC. BE LIABLE TO ANYONE, WHETHER ARISING OUT OF ERRORS OR OMISSIONS, NEGLIGENCE, ACCIDENT OR ANY OTHER CAUSE, FOR ANY LOSS OF DAMAGE, INCLUDING, WITHOUT LIMITATION, SPECIAL, INCIDENTAL, CONSEQUENTIAL, OR EXEMPLARY DAMAGES. ANY LIABILITY ON THE PART OF ENVIRONMENTAL DATA RESOURCES, INC. IS STRICTLY LIMITED TO A REFUND OF THE AMOUNT PAID FOR THIS REPORT.** Purchaser accepts this Report AS IS. Any analyses, estimates, ratings, environmental risk levels or risk codes provided in this Report are provided for illustrative purposes only, and are not intended to provide, nor should they be interpreted as providing any facts regarding, or prediction or forecast of, any environmental risk for any property. Only a Phase I Environmental Site Assessment performed by an environmental professional can provide information regarding the environmental risk for any property. Additionally, the information provided in this Report is not to be construed as legal advice.

Copyright 2015 by Environmental Data Resources, Inc. All rights reserved. Reproduction in any media or format, in whole or in part, of any report or map of Environmental Data Resources, Inc., or its affiliates, is prohibited without prior written permission.

EDR and its logos (including Sanborn and Sanborn Map) are trademarks of Environmental Data Resources, Inc. or its affiliates. All other trademarks used herein are the property of their respective owners.

Date EDR Searched Historical Sources:

Aerial Photography January 23, 2015

Target Property:

Intersection of Devonshire Street & Arleta Ave
Mission Hills, Los A, CA 91345

Year	***Scale***	***Details***	***Source***
1928	Aerial Photograph. Scale: 1"=500'	Flight Year: 1928	Fairchild
1928	Aerial Photograph. Scale: 1"=500'	Flight Year: 1928	Fairchild
1938	Aerial Photograph. Scale: 1"=500'	Flight Year: 1938	Laval
1938	Aerial Photograph. Scale: 1"=500'	Flight Year: 1938	Laval
1947	Aerial Photograph. Scale: 1"=500'	Flight Year: 1947	Tubis
1947	Aerial Photograph. Scale: 1"=500'	Flight Year: 1947	Tubis
1952	Aerial Photograph. Scale: 1"=500'	Flight Year: 1952	Pacific Air
1952	Aerial Photograph. Scale: 1"=500'	Flight Year: 1952	Pacific Air
1965	Aerial Photograph. Scale: 1"=500'	Flight Year: 1965	Fairchild
1965	Aerial Photograph. Scale: 1"=500'	Flight Year: 1965	Fairchild
1976	Aerial Photograph. Scale: 1"=500'	Flight Year: 1976	Teledyne
1976	Aerial Photograph. Scale: 1"=500'	Flight Year: 1976	Teledyne
1981	Aerial Photograph. Scale: 1"=500'	Flight Year: 1981	AMI
1981	Aerial Photograph. Scale: 1"=500'	Flight Year: 1981	AMI
1989	Aerial Photograph. Scale: 1"=500'	Flight Year: 1989	USGS
1989	Aerial Photograph. Scale: 1"=500'	Flight Year: 1989	USGS
1995	Aerial Photograph. Scale: 1"=500'	/DOQQ - acquisition dates: 1995	USGS/DOQQ
1995	Aerial Photograph. Scale: 1"=500'	/DOQQ - acquisition dates: 1995	USGS/DOQQ
1995	Aerial Photograph. Scale: 1"=500'	/DOQQ - acquisition dates: 1995	USGS/DOQQ

Year	*Scale*	*Details*	*Source*
1995	Aerial Photograph. Scale: 1"=500'	/DOQQ - acquisition dates: 1995	USGS/DOQQ
2002	Aerial Photograph. Scale: 1"=500'	Flight Year: 2002	USGS
2002	Aerial Photograph. Scale: 1"=500'	Flight Year: 2002	USGS
2005	Aerial Photograph. Scale: 1"=500'	Flight Year: 2005	USDA/NAIP
2005	Aerial Photograph. Scale: 1"=500'	Flight Year: 2005	USDA/NAIP
2005	Aerial Photograph. Scale: 1"=500'	Flight Year: 2005	USDA/NAIP
2005	Aerial Photograph. Scale: 1"=500'	Flight Year: 2005	USDA/NAIP
2009	Aerial Photograph. Scale: 1"=500'	Flight Year: 2009	USDA/NAIP
2009	Aerial Photograph. Scale: 1"=500'	Flight Year: 2009	USDA/NAIP
2009	Aerial Photograph. Scale: 1"=500'	Flight Year: 2009	USDA/NAIP
2009	Aerial Photograph. Scale: 1"=500'	Flight Year: 2009	USDA/NAIP
2010	Aerial Photograph. Scale: 1"=500'	Flight Year: 2010	USDA/NAIP
2010	Aerial Photograph. Scale: 1"=500'	Flight Year: 2010	USDA/NAIP
2010	Aerial Photograph. Scale: 1"=500'	Flight Year: 2010	USDA/NAIP
2010	Aerial Photograph. Scale: 1"=500'	Flight Year: 2010	USDA/NAIP
2012	Aerial Photograph. Scale: 1"=500'	Flight Year: 2012	USDA/NAIP
2012	Aerial Photograph. Scale: 1"=500'	Flight Year: 2012	USDA/NAIP
2012	Aerial Photograph. Scale: 1"=500'	Flight Year: 2012	USDA/NAIP
2012	Aerial Photograph. Scale: 1"=500'	Flight Year: 2012	USDA/NAIP

INQUIRY #: 4185299.9
YEAR: 1928
= 500'
N
EDR

INQUIRY #: 4185299.9
YEAR: 1928
= 500'
N
EDR

INQUIRY #: 4185299.9
YEAR: 1938
= 500'
N
EDR

INQUIRY #: 4185299.9
YEAR: 1938
= 500'
N
EDR

INQUIRY #: 4185299.9
YEAR: 1947
= 500'
N
EDR

INQUIRY #: 4185299.9
YEAR: 1947
= 500'
N
EDR

INQUIRY #: 4185299.9
YEAR: 1952
= 500'
N
EDR

INQUIRY #: 4185299.9
YEAR: 1952
= 500'
N
EDR

INQUIRY #: 4185299.9
YEAR: 1965
= 500'
N
EDR

INQUIRY #: 4185299.9
YEAR: 1965
= 500'
N
EDR

INQUIRY #: 4185299.9
YEAR: 1976
= 500'
N
EDR

INQUIRY #: 4185299.9
YEAR: 1976
= 500'
N
EDR

INQUIRY #: 4185299.9
YEAR: 1981
= 500'
N
EDR

INQUIRY #: 4185299.9
YEAR: 1981
= 500'
N
EDR

INQUIRY #: 4185299.9
YEAR: 1989
= 500'
N
EDR

INQUIRY #: 4185299.9
YEAR: 1995
= 500'
N
EDR

INQUIRY #: 4185299.9
YEAR: 1995
= 500'
N
EDR

INQUIRY #: 4185299.9
YEAR: 1995
= 500'
N
EDR

INQUIRY #: 4185299.9
YEAR: 2002
= 500'
N
EDR

INQUIRY #: 4185299.9
YEAR: 2002
= 500'
N
EDR

INQUIRY #: 4185299.9
YEAR: 2005
= 500'
N
EDR

INQUIRY #: 4185299.9
YEAR: 2005
= 500'
N
EDR

INQUIRY #: 4185299.9
YEAR: 2005
= 500'
N
EDR

INQUIRY #: 4185299.9
YEAR: 2005
= 500'
N
EDR

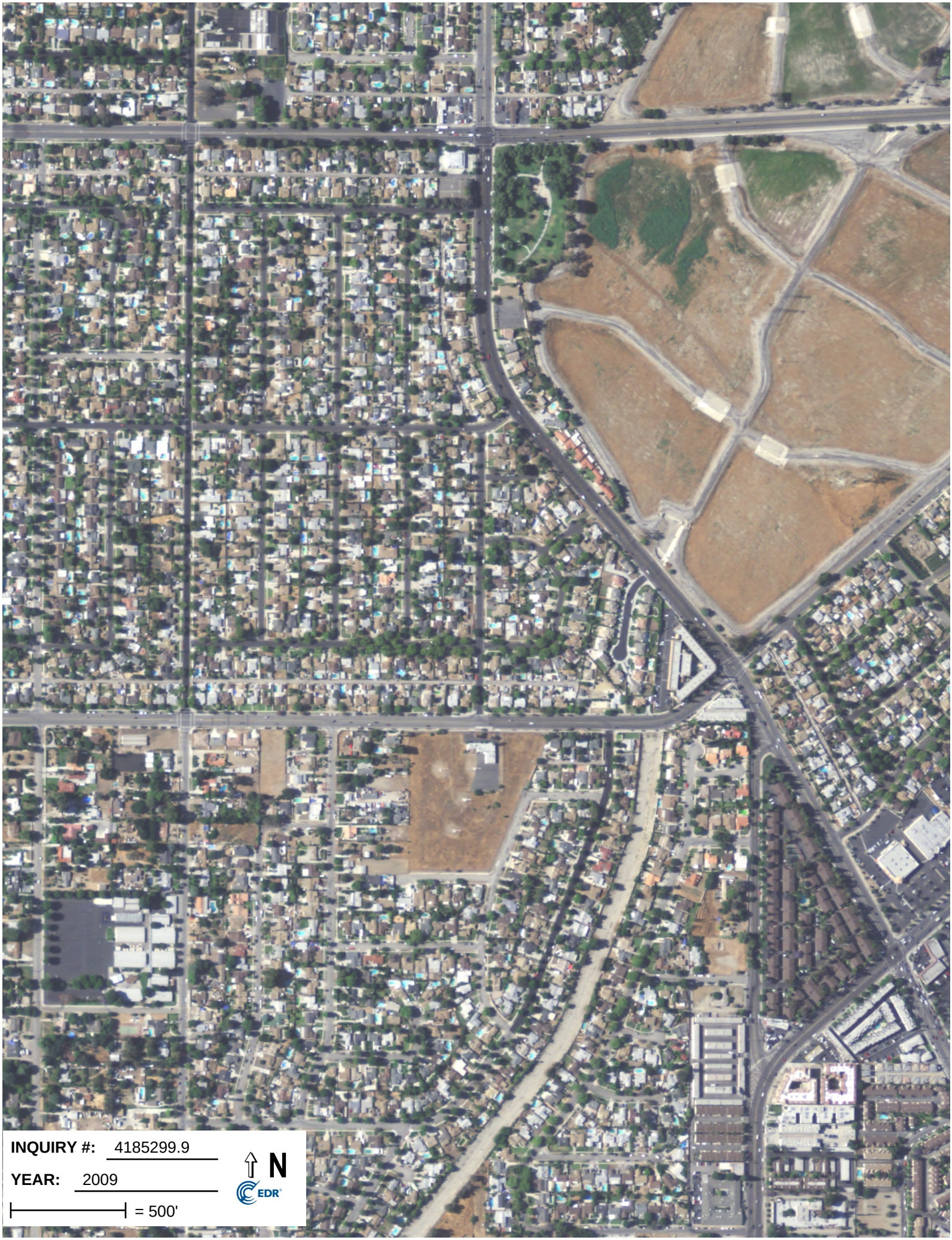
INQUIRY #: 4185299.9
YEAR: 2009
= 500'
N
EDR

INQUIRY #: 4185299.9
YEAR: 2009
= 500'
N
EDR

INQUIRY #: 4185299.9
YEAR: 2009
= 500'
N
EDR

INQUIRY #: 4185299.9
YEAR: 2009
= 500'
N
EDR

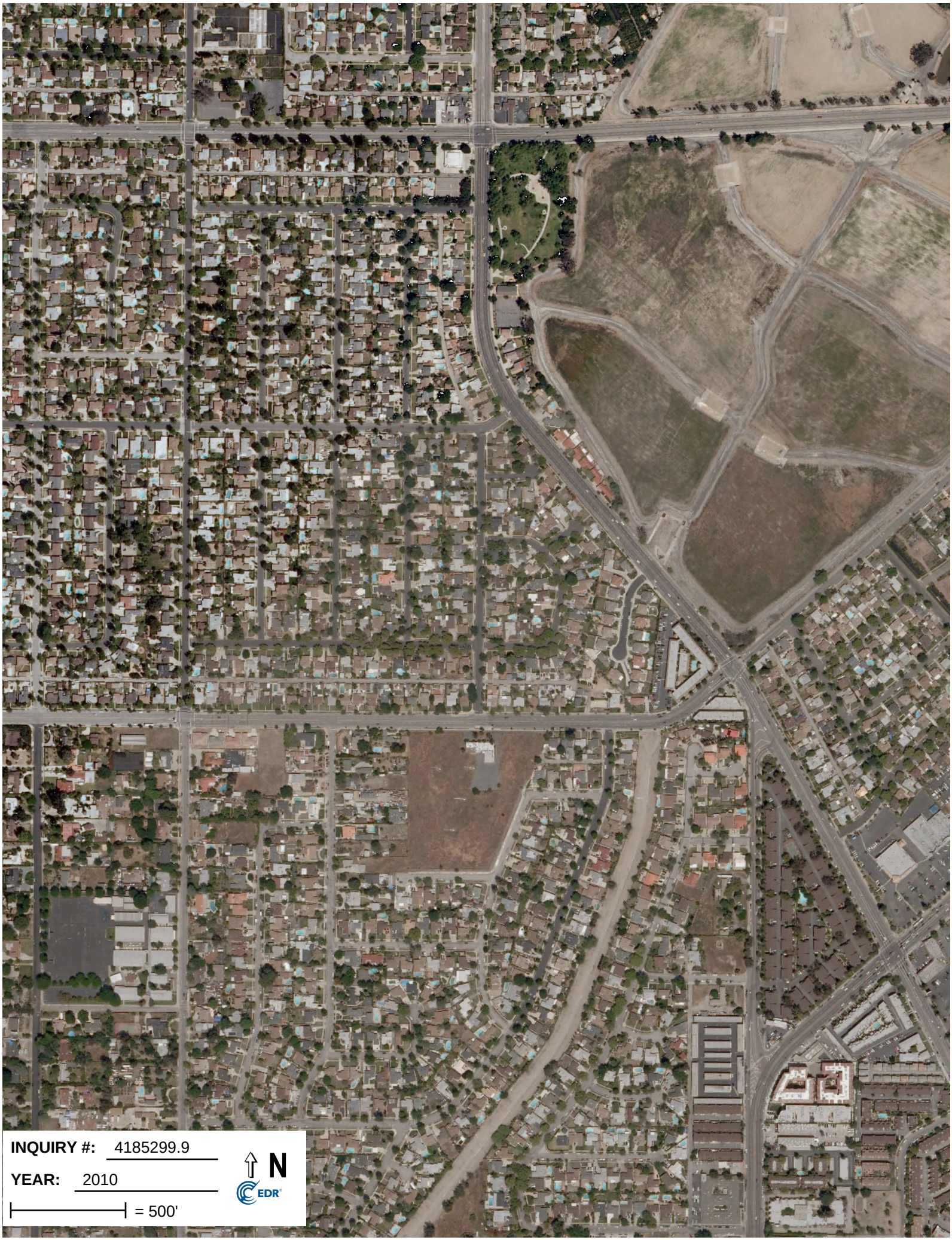
INQUIRY #: 4185299.9
YEAR: 2010
= 500'
N
EDR

INQUIRY #: 4185299.9
YEAR: 2010
= 500'
N
EDR

INQUIRY #: 4185299.9
YEAR: 2010
= 500'
N
EDR

INQUIRY #: 4185299.9
YEAR: 2010
= 500'
N
EDR

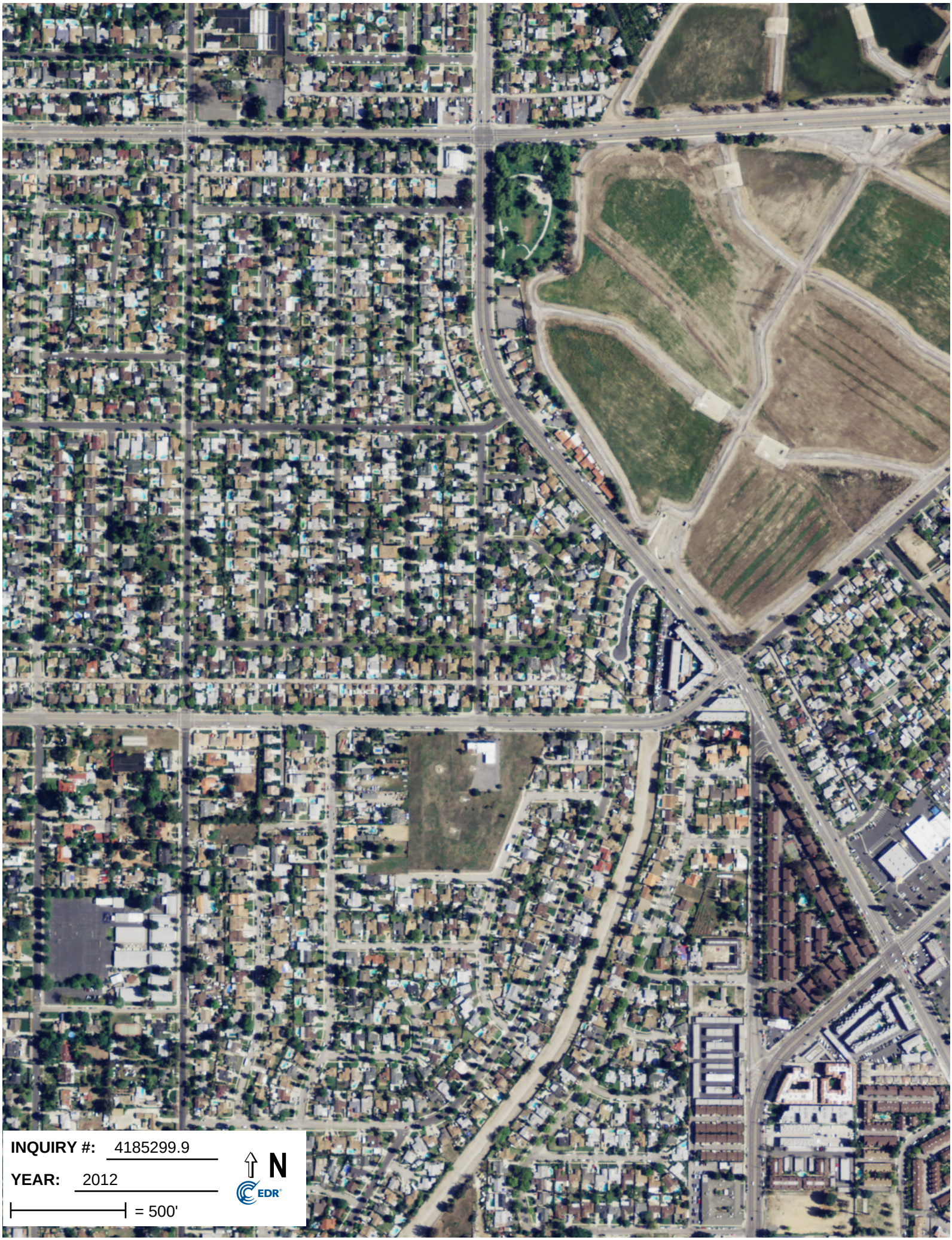
INQUIRY #: 4185299.9
YEAR: 2012
= 500'
N
EDR

INQUIRY #: 4185299.9
YEAR: 2012
= 500'
N
EDR

INQUIRY #: 4185299.9
YEAR: 2012
= 500'
N
EDR

INQUIRY #: 4185299.9
YEAR: 2012
= 500'
N
EDR

APPENDIX E
HISTORICAL SANBORN MAPS

Pacoima Spreading Grounds Lacfcd Site
Intersection of Devonshire Street & Arleta Ave
Mission Hills, Los A, CA 91345

Inquiry Number: 4185299.3
January 19, 2015

Certified Sanborn® Map Report

6 Armstrong Road, 4th Floor
Shelton, Connecticut 06484
Toll Free: 800.352.0050
www.edrnet.com

Certified Sanborn® Map Report

1/19/15

Site Name:	**Client Name:**
Pacoima Spreading Grounds	GeoSyntec Consultants
Intersection of Devonshire	2100 Main St.
Mission Hills, Los A, CA 91345	Huntington Beach, CA 92648
EDR Inquiry # 4185299.3	Contact: Zahra Amini

The Sanborn Library has been searched by EDR and maps covering the target property location as provided by GeoSyntec Consultants were identified for the years listed below. The Sanborn Library is the largest, most complete collection of fire insurance maps. The collection includes maps from Sanborn, Bromley, Perris & Browne, Hopkins, Barlow, and others. Only Environmental Data Resources Inc. (EDR) is authorized to grant rights for commercial reproduction of maps by the Sanborn Library LLC, the copyright holder for the collection. Results can be authenticated by visiting www.edrnet.com/sanborn.

The Sanborn Library is continually enhanced with newly identified map archives. This report accesses all maps in the collection as of the day this report was generated.

Certified Sanborn Results:

Site Name:	Pacoima Spreading Grounds Lacfcd Site
Address:	Intersection of Devonshire Street & Arleta Ave
City, State, Zip:	Mission Hills, Los A, CA 91345
Cross Street:	
P.O. #	NA
Project:	Pacoima Spreading Grounds
Certification #	6246-4FEE-A8BA

UNMAPPED PROPERTY

This report certifies that the complete holdings of the Sanborn Library, LLC collection have been searched based on client supplied target property information, and fire insurance maps covering the target property were not found.

Sanborn® Library search results
Certification # 6246-4FEE-A8BA

The Sanborn Library includes more than 1.2 million fire insurance maps from Sanborn, Bromley, Perris & Browne, Hopkins, Barlow and others which track historical property usage in approximately 12,000 American cities and towns. Collections searched:

- ✔ Library of Congress
- ✔ University Publications of America
- ✔ EDR Private Collection

The Sanborn Library LLC Since 1866™

Limited Permission To Make Copies

GeoSyntec Consultants (the client) is permitted to make up to FIVE photocopies of this Sanborn Map transmittal and each fire insurance map accompanying this report solely for the limited use of its customer. No one other than the client is authorized to make copies. Upon request made directly to an EDR Account Executive, the client may be permitted to make a limited number of additional photocopies. This permission is conditioned upon compliance by the client, its customer and their agents with EDR's copyright policy; a copy of which is available upon request.

Disclaimer - Copyright and Trademark notice

This Report contains certain information obtained from a variety of public and other sources reasonably available to Environmental Data Resources, Inc. It cannot be concluded from this Report that coverage information for the target and surrounding properties does not exist from other sources. NO WARRANTY EXPRESSED OR IMPLIED, IS MADE WHATSOEVER IN CONNECTION WITH THIS REPORT. ENVIRONMENTAL DATA RESOURCES, INC. SPECIFICALLY DISCLAIMS THE MAKING OF ANY SUCH WARRANTIES, INCLUDING WITHOUT LIMITATION, MERCHANTABILITY OR FITNESS FOR A PARTICULAR USE OR PURPOSE. ALL RISK IS ASSUMED BY THE USER. IN NO EVENT SHALL ENVIRONMENTAL DATA RESOURCES, INC. BE LIABLE TO ANYONE, WHETHER ARISING OUT OF ERRORS OR OMISSIONS, NEGLIGENCE, ACCIDENT OR ANY OTHER CAUSE, FOR ANY LOSS OF DAMAGE, INCLUDING, WITHOUT LIMITATION, SPECIAL, INCIDENTAL CONSEQUENTIAL, OR EXEMPLARY DAMAGES. ANY LIABILITY ON THE PART OF ENVIRONMENTAL DATA RESOURCES, INC. IS STRICTLY LIMITED TO A REFUND OF THE AMOUNT PAID FOR THIS REPORT. Purchaser accepts this Report "AS IS". Any analyses, estimates, ratings, environmental risk levels or risk codes provided in this Report are provided for illustrative purposes only, and are not intended to provide, nor should they be interpreted as providing any facts regarding, or prediction or forecast of, any environmental risk for any property. Only a Phase I Environmental Site Assessment performed by an environmental professional can provide information regarding the environmental risk for any property. Additionally, the information provided in this Report is not to be construed as legal advice.

Copyright 2015 by Environmental Data Resources, Inc. All rights reserved. Reproduction in any media or format, in whole or in part, of any report or map of Environmental Data Resources, Inc., or its affiliates, is prohibited without prior written permission.

EDR and its logos (including Sanborn and Sanborn Map) are trademarks of Environmental Data Resources, Inc. or its affiliates. All other trademarks used herein are the property of their respective owners.

APPENDIX F
CITY DIRECTORY ABSTRACTS

Pacoima Spreading Grounds Lacfcd Site
Intersection of Devonshire Street & Arleta Ave
Mission Hills, Los A, CA 91345

Inquiry Number: 4185299.5
January 19, 2015

The EDR-City Directory Abstract

Environmental Data Resources Inc

6 Armstrong Road
Shelton, CT 06484
800.352.0050
www.edrnet.com

TABLE OF CONTENTS

SECTION

Executive Summary

Findings

City Directory Images

Thank you for your business.
Please contact EDR at 1-800-352-0050
with any questions or comments.

Disclaimer - Copyright and Trademark Notice

This Report contains certain information obtained from a variety of public and other sources reasonably available to Environmental Data Resources, Inc. It cannot be concluded from this Report that coverage information for the target and surrounding properties does not exist from other sources. **NO WARRANTY EXPRESSED OR IMPLIED, IS MADE WHATSOEVER IN CONNECTION WITH THIS REPORT. ENVIRONMENTAL DATA RESOURCES, INC. SPECIFICALLY DISCLAIMS THE MAKING OF ANY SUCH WARRANTIES, INCLUDING WITHOUT LIMITATION, MERCHANTABILITY OR FITNESS FOR A PARTICULAR USE OR PURPOSE. ALL RISK IS ASSUMED BY THE USER. IN NO EVENT SHALL ENVIRONMENTAL DATA RESOURCES, INC. BE LIABLE TO ANYONE, WHETHER ARISING OUT OF ERRORS OR OMISSIONS, NEGLIGENCE, ACCIDENT OR ANY OTHER CAUSE, FOR ANY LOSS OR DAMAGE, INCLUDING, WITHOUT LIMITATION, SPECIAL, INCIDENTAL, CONSEQUENTIAL, OR EXEMPLARY DAMAGES. ANY LIABILITY ON THE PART OF ENVIRONMENTAL DATA RESOURCES, INC. IS STRICTLY LIMITED TO A REFUND OF THE AMOUNT PAID FOR THIS REPORT.** Purchaser accepts this Report "AS IS". Any analyses, estimates, ratings, environmental risk levels or risk codes provided in this Report are provided for illustrative purposes only, and are not intended to provide, nor should they be interpreted as providing any facts regarding, or prediction orforecast of, any environmental risk for any property. Only a Phase I Environmental Site Assessment performed by an environmental professional can provide information regarding the environmental risk for any property. Additionally, the information provided in this Report is not to be construed as legal advice.

Copyright 2015 by Environmental Data Resources, Inc. All rights reserved. Reproduction in any media or format, in whole or in part, of any report or map of Environmental Data Resources, Inc. or its affiliates is prohibited without prior written permission.

EDR and its logos (including Sanborn and Sanborn Map) are trademarks of Environmental Data Resources, Inc. or its affiliates. All other trademarks used herein are the property of their respective owners.

EXECUTIVE SUMMARY

DESCRIPTION

Environmental Data Resources, Inc.'s (EDR) City Directory Abstract is a screening tool designed to assist environmental professionals in evaluating potential liability on a target property resulting from past activities. EDR's City Directory Abstract includes a search and abstract of available city directory data. For each address, the directory lists the name of the corresponding occupant at five year intervals.

Business directories including city, cross reference and telephone directories were reviewed, if available, at approximately five year intervals for the years spanning 1920 through 2013. This report compiles information gathered in this review by geocoding the latitude and longitude of properties identified and gathering information about properties within 660 feet of the target property.

A summary of the information obtained is provided in the text of this report.

RESEARCH SUMMARY

The following research sources were consulted in the preparation of this report. An "X" indicates where information was identified in the source and provided in this report.

Year	Source	TP	Adjoining	Text Abstract	Source Image
2013	Cole Information Services	-	-	-	-
2008	Cole Information Services	-	-	-	-
2006	Haines Company	-	-	-	-
2004	Haines Company	-	X	X	-
2003	Haines & Company	-	-	-	-
2001	Haines & Company, Inc.	-	-	-	-
2000	Pacific Bell Telephone	-	-	-	-
1999	Haines Company	-	-	-	-
1996	GTE	-	-	-	-
1995	Pacific Bell	-	-	-	-
1992	PACIFIC BELL WHITE PAGES	-	-	-	-
1991	Pacific Bell	-	-	-	-
1990	Pacific Bell	-	-	-	-
1986	Pacific Bell	-	-	-	-
1985	Pacific Bell	-	-	-	-
1981	Pacific Telephone	-	-	-	-
1980	Pacific Telephone	-	X	X	-
1976	Pacific Telephone	-	-	-	-
1975	Pacific Telephone	-	-	-	-
1972	R. L. Polk & Co.	-	-	-	-
1971	Pacific Telephone	-	-	-	-
1970	Pacific Telephone	-	-	-	-
1969	Pacific Telephone	-	-	-	-
1967	Pacific Telephone	-	-	-	-
1966	Pacific Telephone	-	-	-	-

EXECUTIVE SUMMARY

Year	Source	TP	Adjoining	Text Abstract	Source Image
1965	Pacific Telephone	-	-	-	-
1964	Pacific Telephone	-	-	-	-
1963	Pacific Telephone	-	-	-	-
1962	Pacific Telephone	-	-	-	-
1961	Luskey Brothers & Co	-	-	-	-
1960	General Telephone Company Publishers	-	-	-	-
1958	Pacific Telephone	-	-	-	-
1957	Pacific Telephone	-	-	-	-
1956	General Telephone Company Publishers	-	-	-	-
1955	Home Directory Service	-	-	-	-
1954	R. L. Polk & Co.	-	-	-	-
1952	Los Angeles Directory Co.	-	-	-	-
1951	Pacific Directory Co.	-	-	-	-
1950	Pacific Telephone	-	-	-	-
1949	Los Angeles Directory Co.	-	-	-	-
1948	Associated Telephone Company, Ltd.	-	-	-	-
1947	Pacific Directory Co.	-	-	-	-
1946	Western Directory Co.	-	-	-	-
1945	The Glendale Directory Co.	-	-	-	-
1944	R. L. Polk & Co.	-	-	-	-
1942	Los Angeles Directory Co.	-	-	-	-
1940	Glendale Directory Co.	-	-	-	-
1939	Los Angeles Directory Co.	-	-	-	-
1938	Los Angeles Directory Co.	-	-	-	-
1937	Los Angeles Directory Co.	-	-	-	-
1936	Los Angeles Directory Co.	-	-	-	-
1935	Los Angeles Directory Co.	-	-	-	-
1934	Los Angeles Directory Co.	-	-	-	-
1933	Los Angeles Directory Co.	-	-	-	-
1932	Los Angeles Directory Co.	-	-	-	-
1931	Los Angeles Directory Co.	-	-	-	-
1930	Glendale Directory Co.	-	-	-	-
1929	Los Angeles Directory Co.	-	-	-	-
1928	Los Angeles Directory Co.	-	-	-	-
1927	Kaasen Directory Company Publishers	-	-	-	-
1926	Los Angeles Directory Co.	-	-	-	-
1925	Los Angeles Directory Co.	-	-	-	-
1924	Los Angeles Directory Co.	-	-	-	-
1923	Los Angeles Directory Co.	-	-	-	-
1921	Los Angeles Directory Co.	-	-	-	-
1920	Los Angeles Directory Co.	-	-	-	-

FINDINGS

TARGET PROPERTY INFORMATION

ADDRESS

Intersection of Devonshire Street & Arleta Ave
Mission Hills, Los A, CA 91345

FINDINGS DETAIL

Target Property research detail.

FINDINGS

ADJOINING PROPERTY DETAIL

The following Adjoining Property addresses were researched for this report. Detailed findings are provided for each address.

DEVONSHIRE LN

14715 DEVONSHIRE LN

Year	Uses	Source
1980	SOFOS MARY	Pacific Telephone

14719 DEVONSHIRE LN

Year	Uses	Source
1980	CASOTTI MICHAEL G MISSION HILLS	Pacific Telephone

14739 DEVONSHIRE LN

Year	Uses	Source
1980	JORDAN BRUCE K	Pacific Telephone

DEVONSHIRE ST

14715 DEVONSHIRE ST

Year	Uses	Source
2004	SCLARIN Santos	Haines Company

14719 DEVONSHIRE ST

Year	Uses	Source
2004	SPACISJov Ho	Haines Company

14727 DEVONSHIRE ST

Year	Uses	Source
2004	WIGETO	Haines Company

14733 DEVONSHIRE ST

Year	Uses	Source
2004	GONZALEZHetor	Haines Company

14739 DEVONSHIRE ST

Year	Uses	Source
2004	ELLIS Crystal	Haines Company

FINDINGS

TARGET PROPERTY: ADDRESS NOT IDENTIFIED IN RESEARCH SOURCE

The following Target Property addresses were researched for this report, and the addresses were not identified in the research source.

Address Researched	Address Not Identified in Research Source
Intersection of Devonshire Street & Arleta Ave	2013, 2008, 2006, 2004, 2003, 2001, 2000, 1999, 1996, 1995, 1992, 1991, 1990, 1986, 1985, 1981, 1980, 1976, 1975, 1972, 1971, 1970, 1969, 1967, 1966, 1965, 1964, 1963, 1962, 1961, 1960, 1958, 1957, 1956, 1955, 1954, 1952, 1951, 1950, 1949, 1948, 1947, 1946, 1945, 1944, 1942, 1940, 1939, 1938, 1937, 1936, 1935, 1934, 1933, 1932, 1931, 1930, 1929, 1928, 1927, 1926, 1925, 1924, 1923, 1921, 1920

ADJOINING PROPERTY: ADDRESSES NOT IDENTIFIED IN RESEARCH SOURCE

The following Adjoining Property addresses were researched for this report, and the addresses were not identified in research source.

Address Researched	Address Not Identified in Research Source
14715 DEVONSHIRE LN	2013, 2008, 2006, 2004, 2003, 2001, 2000, 1999, 1996, 1995, 1992, 1991, 1990, 1986, 1985, 1981, 1976, 1975, 1972, 1971, 1970, 1969, 1967, 1966, 1965, 1964, 1963, 1962, 1961, 1960, 1958, 1957, 1956, 1955, 1954, 1952, 1951, 1950, 1949, 1948, 1947, 1946, 1945, 1944, 1942, 1940, 1939, 1938, 1937, 1936, 1935, 1934, 1933, 1932, 1931, 1930, 1929, 1928, 1927, 1926, 1925, 1924, 1923, 1921, 1920
14715 DEVONSHIRE ST	2013, 2008, 2006, 2003, 2001, 2000, 1999, 1996, 1995, 1992, 1991, 1990, 1986, 1985, 1981, 1980, 1976, 1975, 1972, 1971, 1970, 1969, 1967, 1966, 1965, 1964, 1963, 1962, 1961, 1960, 1958, 1957, 1956, 1955, 1954, 1952, 1951, 1950, 1949, 1948, 1947, 1946, 1945, 1944, 1942, 1940, 1939, 1938, 1937, 1936, 1935, 1934, 1933, 1932, 1931, 1930, 1929, 1928, 1927, 1926, 1925, 1924, 1923, 1921, 1920
14719 DEVONSHIRE LN	2013, 2008, 2006, 2004, 2003, 2001, 2000, 1999, 1996, 1995, 1992, 1991, 1990, 1986, 1985, 1981, 1976, 1975, 1972, 1971, 1970, 1969, 1967, 1966, 1965, 1964, 1963, 1962, 1961, 1960, 1958, 1957, 1956, 1955, 1954, 1952, 1951, 1950, 1949, 1948, 1947, 1946, 1945, 1944, 1942, 1940, 1939, 1938, 1937, 1936, 1935, 1934, 1933, 1932, 1931, 1930, 1929, 1928, 1927, 1926, 1925, 1924, 1923, 1921, 1920
14719 DEVONSHIRE ST	2013, 2008, 2006, 2003, 2001, 2000, 1999, 1996, 1995, 1992, 1991, 1990, 1986, 1985, 1981, 1980, 1976, 1975, 1972, 1971, 1970, 1969, 1967, 1966, 1965, 1964, 1963, 1962, 1961, 1960, 1958, 1957, 1956, 1955, 1954, 1952, 1951, 1950, 1949, 1948, 1947, 1946, 1945, 1944, 1942, 1940, 1939, 1938, 1937, 1936, 1935, 1934, 1933, 1932, 1931, 1930, 1929, 1928, 1927, 1926, 1925, 1924, 1923, 1921, 1920
14727 DEVONSHIRE ST	2013, 2008, 2006, 2003, 2001, 2000, 1999, 1996, 1995, 1992, 1991, 1990, 1986, 1985, 1981, 1980, 1976, 1975, 1972, 1971, 1970, 1969, 1967, 1966, 1965, 1964, 1963, 1962, 1961, 1960, 1958, 1957, 1956, 1955, 1954, 1952, 1951, 1950, 1949, 1948, 1947, 1946, 1945, 1944, 1942, 1940, 1939, 1938, 1937, 1936, 1935, 1934, 1933, 1932, 1931, 1930, 1929, 1928, 1927, 1926, 1925, 1924, 1923, 1921, 1920
14733 DEVONSHIRE ST	2013, 2008, 2006, 2003, 2001, 2000, 1999, 1996, 1995, 1992, 1991, 1990, 1986, 1985, 1981, 1980, 1976, 1975, 1972, 1971, 1970, 1969, 1967, 1966, 1965, 1964, 1963, 1962, 1961, 1960, 1958, 1957, 1956, 1955, 1954, 1952, 1951, 1950, 1949, 1948, 1947, 1946, 1945, 1944, 1942, 1940, 1939, 1938, 1937, 1936, 1935, 1934, 1933, 1932, 1931, 1930, 1929, 1928, 1927, 1926, 1925, 1924, 1923, 1921, 1920
14739 DEVONSHIRE LN	2013, 2008, 2006, 2004, 2003, 2001, 2000, 1999, 1996, 1995, 1992, 1991, 1990, 1986, 1985, 1981, 1976, 1975, 1972, 1971, 1970, 1969, 1967, 1966, 1965, 1964, 1963, 1962, 1961, 1960, 1958, 1957, 1956, 1955, 1954, 1952, 1951, 1950, 1949, 1948, 1947, 1946, 1945, 1944, 1942, 1940, 1939, 1938, 1937, 1936, 1935, 1934, 1933, 1932, 1931, 1930, 1929, 1928, 1927, 1926, 1925, 1924, 1923, 1921, 1920

FINDINGS

Address Researched	Address Not Identified in Research Source
14739 DEVONSHIRE ST	2013, 2008, 2006, 2003, 2001, 2000, 1999, 1996, 1995, 1992, 1991, 1990, 1986, 1985, 1981, 1980, 1976, 1975, 1972, 1971, 1970, 1969, 1967, 1966, 1965, 1964, 1963, 1962, 1961, 1960, 1958, 1957, 1956, 1955, 1954, 1952, 1951, 1950, 1949, 1948, 1947, 1946, 1945, 1944, 1942, 1940, 1939, 1938, 1937, 1936, 1935, 1934, 1933, 1932, 1931, 1930, 1929, 1928, 1927, 1926, 1925, 1924, 1923, 1921, 1920

APPENDIX G
SITE RECONNAISSANCE PHOTOGRAPHIC DOCUMENTATION

Photo No.:	1	**Date:**	2/2/2015
Photographer:	Brian Cozzens	**Direction:**	North
Subject:	Upstream water sources: East Canyon Channel (left), and Pacoima Wash (right)		
Project:	Pacoima Spreading Grounds	**City/State:**	Los Angeles, CA

Photo No.:	2	**Date:**	2/2/2015
Photographer:	Brian Cozzens	**Direction:**	Northwest
Subject:	Inlet gates into Pacoima Spreading Grounds headworks		
Project:	Pacoima Spreading Grounds	**City/State:**	Los Angeles, CA

Photo No.:	3	**Date:**	2/2/2015
Photographer:	Brian Cozzens	**Direction:**	Northeast
Subject:	Headworks area with office/supplies building on left, gate operation buildings on right		
Project:	Pacoima Spreading Grounds	**City/State:**	Los Angeles, CA

Photo No.:	4	**Date:**	2/2/2015
Photographer:	Brian Cozzens	**Direction:**	South
Subject:	Removal location of former gasoline UST for backup generator; UST removed ~1 year ago		
Project:	Pacoima Spreading Grounds	**City/State:**	Los Angeles, CA

Photo No.:	5	**Date:**	2/2/2015
Photographer:	Brian Cozzens	**Direction:**	Southeast
Subject:	Portion of former landfill location		
Project:	Pacoima Spreading Grounds	**City/State:**	Los Angeles, CA

Photo No.:	6	**Date:**	2/2/2015
Photographer:	Brian Cozzens	**Direction:**	Northwest
Subject:	Gravel area on east side of main Pacoima Wash -previous oil/gas wells location		
Project:	Pacoima Spreading Grounds	**City/State:**	Los Angeles, CA

Photo No.:	7	**Date:**	2/2/2015
Photographer:	Brian Cozzens	**Direction:**	North
Subject:	Hazardous materials container containing paint cans for graffiti clean up		
Project:	Pacoima Spreading Grounds	**City/State:**	Los Angeles, CA

Photo No.:	8	**Date:**	2/2/2015
Photographer:	Brian Cozzens	**Direction:**	South
Subject:	Spreading grounds south of Devonshire		
Project:	Pacoima Spreading Grounds	**City/State:**	Los Angeles, CA

APPENDIX H
ENVIRONMENTAL PROFESSIONALS' QUALIFICATIONS

Geosyntec consultants

MICHAEL J. REARDON, P.E.
Associate Engineer

environmental due diligence
environmental site assessment
soil, vapor and groundwater remediation

EDUCATION

Clarkson University, New York: M.E. Environmental Engineering, 1995
University of New York at Plattsburgh, B.S. Environmental Systems, Chemistry, 1994.

REGISTRATIONS AND CERTIFICATIONS

Registered Professional Engineer, California, Number C 63003
Registered Professional Engineer, Arizona, Number AZ 48628

REPRESENTATIVE EXPERIENCE

Mr. Reardon has over 19 years of experience in successfully conducting environmental due diligence and multi-disciplinary environmental site assessment and remediation projects. Mr. Reardon has managed these projects on behalf of both public and private sector clients, often working at the direction of in-house or outside legal counsel. Mr. Reardon is experienced in managing the successful completion of projects under the regulatory oversight of the United Stated Environmental Protection Agency (USEPA), the California Department of Toxic Substances Control (DTSC), the South Coast Air Quality Management District (SCAQMD), the Orange County Health Care Agency and the Los Angeles and Santa Ana Regional Water Quality Control Boards (RWQCBs).

Additional areas of technical experience related to these types of projects also include:

- Human health risk assessments
- Indoor air vapor intrusion assessments
- Landfill gas migration
- LNAPL/DNAPL source investigations
- Groundwater pump and treat
- Soil vapor extraction
- Hazardous waste removal actions
- Remediation feasibility studies
- Underground storage tank investigations
- Tank inspection and integrity testing
- Burn dump investigations
- Regulatory agency No Further Action determinations
- Soil, soil vapor and groundwater characterizations

Details regarding select due diligence, site assessment and remediation projects are provided in the following:

Orange County Transportation Authority (OCTA), *Orange County, California*. Mr. Reardon is the project manager for an on-call environmental services contract with

OCTA. Effort conducted under this contract includes due diligence and site assessment services in support of transportation infrastructure projects. Mr. Reardon works closely with OCTA and other project team members (design engineers, real estate professionals and construction managers) to perform assessments of properties identified for easements or "full take" in support of the project. Properties are assessed for potential environmental impacts in advance of project construction by conducting Phase I ESAs and as warranted Phase II assessments of soil, soil vapor, or groundwater conditions. Should impacts be identified, remedial options are evaluated and cost estimates are prepared. Geosyntec is also assisting OCTA with pre-demolition hazardous material surveys of structures and preparation of abatement specifications and cost estimates to support OCTA bidding and contracting of the demolition work.

Home Depot, U.S.A., *California and Arizona*
MASCO Corporation, *California Sites*
Target Corporation, *Ontario, California*
Alumax Industrial Facility, *Riverside, California*
Prologis Development, *California Sites*
L.A. Unified School District, *Los Angeles Sites*
St. John Knits, *Southern California Facilities*

For these clients, Mr. Reardon managed numerous Site Assessments for several prospective manufacturing facilities, public schools, retail stores, and mixed-use developments. Site assessment experience for these facilities has included:

- Phase I ESAs
- Lead and asbestos surveys
- Soil, soil vapor and groundwater characterizations
- Underground tank investigations
- Indoor air vapor migration evaluations; and
- Human health risk assessments.

Marine Corps Air Station El Toro, *Orange County, California.* Mr. Reardon was a project manager for the Phase I Environmental Site Assessment (ESA) of the 4,700 acre closed Marine Base. The Phase I ESA environmental due diligence process was intended to define further the nature and scope of required cleanup of MCAS El Toro as part of contemplated redevelopment as a commercial airport by the County of Orange at that time. Work involved managing a team of over 20 professionals in reviewing over 4,000 Department of Navy (DoN) contractor investigation and remedial action reports. The ESA involved the evaluation of historic Base activities and the environmental condition of over 980 Locations of Concern (LOCs). With the change in land use at MCAS El Toro, Mr. Reardon continues to support the County of Orange in assessing potential environmental issues related to certain reuse parcels.

Chapman University Acquisition Properties, *Orange County, California.* Mr. Reardon has assisted Chapman University in assessing potential environmental conditions at

several properties considered for acquisition by the University. Effort has included performing Phase I ESAs and for one property a Phase II assessment of soil and soil vapor quality based on Phase I ESA findings related to historical solvent storage and use. Results of the incremental Phase II assessment identified deep soil and soil vapor impacts that were indicative of a potential larger contamination issue requiring regulatory agency involvement. Based on these findings, Chapman did not purchase the property, avoiding long term environmental liabilities associated with the property.

La Veta Former Refuse Disposal Site, *Orange California.* Mr. Reardon managed the DTSC required assessment of the La Veta Former Refuse Disposal Station on behalf of Orange County Waste and Recycling. The investigation was conducted in residential, recreational and open space areas of the former refuse disposal station to evaluate the nature and extent of municipal and burned wastes and soil gas quality. For a portion of the site, Mr. Reardon also led an indoor air vapor intrusion assessment of several homes to evaluate the potential for indoor air vapor intrusion of PCE identified in nearby soil gas as part of previous investigations. Results of this assessment revealed that subsurface indoor air vapor intrusion was not occurring. Based on the results of two supplemental soil gas monitoring events, DTSC closed the file for Orange County Waste & Recycling.

Former Medical Device Manufacturing Facility, *Irvine, California.* Mr. Reardon is the project manager for this California Santa Ana Regional Water Quality Control Board (RWQCB) lead site. The Site was formerly used for the manufacture of medical devices and investigation and remediation activities were performed prior to Geosyntec's involvement. In 2009, the RWQCB requested evaluation of current groundwater conditions five years following shutdown of the air sparging groundwater remediation system performed by other parties. It was discovered that groundwater conditions were essentially the same in 2010 as they were before the air sparge remedy was operated. In addition to Freon-113, several other chemicals were identified in groundwater including 1,4-dioxane, tetrachloroethene (PCE), trichloroethene (TCE), and 1,1-dichloroethene (1,1-DCE). Under oversight of the RWQCB, Mr. Reardon completed the lateral and vertical delineation of the Freon-113 plume and was able to demonstrate that other chemicals found in groundwater were from off-site sources.

Mr. Reardon then developed a cost effective in-situ remedial approach for addressing the remaining Freon-113 in groundwater utilizing a combination of zero valent iron (ZVI) and calcium acetate to address high concentrations of sulfate. Laboratory bench scale testing identified sulfate as inhibiting the performance of the ZVI and verified that sulfate concentrations could be reduced with calcium acetate by causing precipitation of gypsum mineral (calcium sulfate). A pilot remediation program was completed in early 2013 where ZVI and calcium acetate were injected into the aquifer in a series of boreholes using a high pressure nitrogen gas fracturing and emplacement process. The

boreholes were oriented in lines perpendicular to the plume so that the ZVI will react with the contaminants as groundwater flows through the treatment zone.

Alcoa, *Torrance and Fullerton Sites, California.* Mr. Reardon manages two Alcoa fastening system sites that have chlorinated impacts from historical manufacturing operations. The Fullerton site is under the oversight of the Santa Ana RWQCB and the Torrance site is under the oversight of DTSC. At both sites soil vapor extraction systems are operated and groundwater quality is monitored. For the Torrance facility, supplemental groundwater and soil vapor investigations are currently being performed in accordance with a DTSC approved work plan. Mr. Reardon is concurrently working with Alcoa on developing management/closure strategies for both sites.

Arizona Public Service, *Phoenix Arizona.* Mr. Reardon is currently managing an indoor air vapor intrusion assessment program being conducted under the oversight of EPA for the Arizona based utility company. The industrial building is located within an operable unit of a regional EPA superfund site and results of soil vapor and groundwater investigations raised concerns over indoor air vapor intrusion of chlorinated compounds. Mr. Reardon lead development of an EPA approved work plan for conducting two rounds of indoor air, outdoor and sub-slab soil vapor sampling. Results of two sampling events indicated an incomplete vapor intrusion pathway and no unacceptable risks to potential receptors were identified.

Hassayampa Landfill Superfund Site, *Maricopa County, Arizona.* Mr. Reardon is the project manager for this EPA lead site. At the Hassayampa Landfill, solvent waste disposal in unlined soil pits caused impacts to the vadose zone and groundwater. Mr. Reardon's experience on the Hassayampa Landfill includes; DNAPL source zone investigation and development of a site conceptual model identifying vapor phase transport as the predominant pathway of groundwater impacts; groundwater and soil vapor monitoring well installation; construction and operation of a soil vapor extraction system that has removed over 90 tons of VOC mass to date. The SVE system utilizes a proprietary compression, chilling and condensation technology for cost effective recovery of VOCs in a liquid form. Work at the site has also included operation and optimization of a groundwater pump and treat system utilizing an air stripper. Supporting groundwater calculations and modeling have been performed to support vertical and lateral plume capture. Mr. Reardon continues to manage on-going requirements for this EPA superfund site on behalf of the group of responsible parties.

PROFESSIONAL HISTORY

Geosyntec Consultants, Huntington Beach, California, 1995-Present

APPENDIX D-2

PHASE II ENVIRONMENTAL SITE ASSESSMENT

Geosyntec consultants

2100 Main Street, Suite 150
Huntington Beach, California 92648
PH 714.969.0800
FAX 714.969.0820
www.geosyntec.com

23 October 2015

Ms. Kristin (Keeling) Starbird
Vice President, Environmental Planning
BonTerra Psomas
225 South Lake Avenue, Suite 1000
Pasadena, CA 91101

Subject: Phase II Environmental Site Assessment
Pacoima Spreading Grounds Headworks
Los Angeles, California

Dear Ms. Starbird:

This letter report presents the results of soil and soil vapor sampling and testing conducted at the Pacoima Spreading Grounds headworks property (the Site) of the Los Angeles County Flood Control District (LACFCD), located at 10450 Arleta Avenue, Pacoima, California [Figure 1]. This Report was prepared by Dr. Zahra Amini of Geosyntec Consultants (Geosyntec), and reviewed by Mr. Eric Smalstig, P.E., also of Geosyntec, in accordance with the internal peer review policy of the firm. Geosyntec has prepared this letter report to support the California Environmental Quality Act (CEQA) process for a basin enhancement project at the Site.

PROJECT DESCRIPTION AND PURPOSE

LACFCD is performing a basin enhancement project (Project) at the Pacoima Spreading Grounds. The Project is subject to the CEQA process. To support the planning and CEQA process for the Project, Geosyntec completed a Phase I Environmental Site Assessment (ESA) of the property [Geosyntec, 2015]. During the completion of the Phase I Environmental Site Assessment (ESA) of the Site [Geosyntec, 2015], Recognized Environmental Conditions (RECs) were identified at the Site pursuant to American Society of Testing of Materials (ASTM) guidance. Therefore, LACFCD requested that a Phase II ESA, consisting of Site environmental sample collection and testing, be performed to further assess the Site RECs in the headworks area.

The Phase I ESA revealed evidence of the following RECs, and associated potential sources of impact, in connection with the Site:

- The closed San Fernando City Landfill and the oil and gas wells located adjacent to the Site (northeast of the Site) are potential sources of gas migration to the Site;

- The underground storage tanks (UST) that were located on-Site at 10450 Arleta Avenue (removed from the Site several years ago); and

- The waste materials / paint storage areas and general petroleum hydrocarbon impacts that were detected in soil samples during previous subsurface investigations at the Site.

Accordingly seven locations were identified for soil and soil vapor sampling at the Site. These locations are shown in Figure 2 in relation with the areas of potential concern. The scope of work for this Phase II ESA was to collect soil and soil vapor samples and perform chemical testing on those samples to further evaluate the above listed potential impacts at the Site. The scope of work did not include evaluation of the spreading basins. The field activities and associated results are described in this letter report.

SITE BACKGROUND

The Site is located at 10450 Arleta Avenue in Pacoima, California, north of the intersection of Arleta Avenue and Paxton Street, in the northern portion of the San Fernando Valley [Figure 1]. The Site is bordered by Paxton Street to the southeast, Pacoima Diversion Channel to the east, Arleta Avenue to the southwest, and a fenceline that separates the Site from the residential areas to the west and north of the headworks.

Pacoima Spreading Grounds has been serving as a drainage/flood control feature, and later a spreading grounds, since at least 1952. The water is diverted from the Pacoima Diversion Channel using the radial gate located in the channel adjacent to the headworks at the Site. The water then flows over a weir, through the intake canal, passing through pipes under Arleta Avenue to the spreading basins. The water percolates into the groundwater basin at the spreading grounds. The Site (i.e., headworks area) is trapezoidal with total lot size of approximately 8 acres and is comprised of multiple structures, including a hazardous materials storage area with storage units [Figure2]. A subsurface ESA was conducted at the Site in 2003 [Kleinfelder, 2003]. A summary of the Phase II ESA follows:

- This assessment included the drilling of 30 borings and the collection of 40 soil samples for laboratory testing at the Site.

- The soil samples were analyzed for total petroleum hydrocarbons (gasoline, and diesel range), volatile organic compounds (VOCs), total recoverable petroleum hydrocarbons (TPH), organochlorine pesticides, polychlorinated biphenyls (PCBs), California Title 22 metals, and chlorinated herbicides.

- VOCs, PCBs, herbicides and pesticides were not detected in soil samples.

- Hydrocarbons were detected at concentrations ranging from 1.36 to 85.4 milligrams per kilogram (mg/kg). Petroleum hydrocarbons in soil were not vertically delineated.

- With the exception of lead, concentrations of detected metals were below the U.S. EPA Residential Preliminary Remediation Goals (PRGs); note that PRGs are currently referred to as Regional Screening Levels (RSLs). Lead was detected in one sample at 5 ft below ground surface (bgs) at a concentration of 155 milligram per kilogram (mg/kg). Based on this result the Waste Extraction Test (WET) was performed resulting in a concentration of 9.11 milligrams per liter (mg/L). This concentration is greater than the Soluble Threshold Limit Concentration (STLC) used for hazardous waste classification.

- A soil gas survey was also recommended depending on the future uses of the Site.

In 2011, an underground tank was removed from the headworks area pursuant to a removal permit granted by the Los Angeles City Fire Department [Figure 2]. Subsequently, a closure report dated 31 October 2011 was submitted to the Fire Department which resulted in a "No Further Action" from the Fire Department. The closure report indicated that the tank had no documented releases and no significant concentrations of hydrocarbon associated with the tank were found in the surrounding soils.

FIELD ACTIVITIES

General

The field activities associated with this Phase II Site assessment were conducted in general accordance with Geosyntec's Scope of Work dated July 2014 and a Site-specific Health and Safety Plan (HASP). Field activities included the drilling of soil

borings, collection of soil samples and installation of soil vapor probes were conducted on August 20, 2015. Soil vapor samples were collected in Summa canisters on August 26, 2015. Soil and soil vapor quality at the Site were assessed by drilling and sampling 7 soil borings (SV-1, S-2, S-3, S-4, S-5, S-6, and SV-7). A single-depth soil vapor probe was installed at each of the two SV-1 and SV-7 locations.

Field Work Preparation

The boring locations were marked on August 14, 2015. Geosyntec contracted Goldak, a utility locating firm, to conduct a subsurface geophysical survey on August 14, 2014, to identify locations of potential underground utilities and clear boring locations. Underground Service Alert (USA) was notified more than 48 hours prior to beginning drilling activities to identify and mark underground utilities in the vicinity of the proposed borehole locations. As an added precaution, boring locations were also cleared by hand-auger to depths of approximately 5 ft bgs.

Soil Borings and Sampling

On 20 August 2015, seven soil boring location (SV-1, S-2, S-3, S-4, S-5, S-6, and SV-7), were advanced to a total depth of 10 ft bgs at the locations shown in Figure 2. At each boring location, a subcontractor, Interphase Environmental Inc. (Interphase) first cored through the asphalt or concrete (as applicable) prior to hand augering to depths of approximately 5 ft bgs. Following hand augering, borings were advanced using a truck-mounted direct-push drill rig (Geoprobe® 6600) to the target depths. A continuous soil core was collected from each of the seven boring locations and visually logged for lithology in accordance with the Unified Soil Classification System (USCS) by the onsite Geosyntec representative. In addition, the soil core was screened for evidence of VOC impacts using a photoionization detector (PID). Soils underneath the Site were generally found to be silty sand, silt, and sand with gravel. Copies of the boring logs are included in Appendix A.

A total of twenty eight (28) soil samples (four from each boring) were collected at four depths of approximately 1, 3, 7 and 10 ft bgs in laboratory-supplied glass jars sealed with Teflon®-lined plastic caps for analysis of TPH and California Title 22 Metals. Each jar soil sample from approximately 1 and 10 ft bgs was accompanied with a Terra Core sample. Soil samples from 3 and 7 ft bgs were collected to be retained for laboratory testing as a contingency, based on the results from the 1 ft and 10 ft samples. Following collection, each soil sample was labeled, double-bagged in one-gallon plastic bags, and placed in an insulated cooler with ice for transport to the laboratory under

chain of custody protocols. Soil samples were submitted to Eurofins Calscience Environmental Laboratories, Inc. (Eurofins Calscience), a National Environmental Laboratory Accreditation Conference (NELAC) accredited laboratory, for analyses of TPH by EPA Method 8015B (M), Title 22 metals by EPA Method 6010B/7471A, and for soluble metals by EPA Method 6020 STLC ICP/MS and Method 6010B STLC ICP.

The non-dedicated soil sampling equipment (e.g., direct-push rods and tips, hand augers, etc.) was decontaminated between borehole locations using the "three-bucket-wash" method. Sampling equipment was first washed in a solution of Alconox and potable water, then rinsed with potable water, and finally rinsed with distilled water and allowed to air-dry.

The soil analytical results for Title 22 metals, soluble lead and TPH are presented in Tables 1 through 3 and are discussed under "Results". Soil analytical laboratory results for metals, soluble lead and TPH are provided in Appendix B-1.

Soil Vapor Probe Installation and Sampling

Following direct push drilling of soil borings, soil vapor probes were installed at a single depth of 10 ft bgs at locations SV-1 and SV-7 [Figure 2].

Soil vapor probes were installed using prefabricated six-inch long polyethylene screens set at the target depth. The polyethylene vapor probe screens were attached to 0.25-inch diameter Nylaflow® tubing and lowered down the borings to the target depths. Approximately one foot of medium grained filter sand (#3) was placed around the soil vapor probe screens. Alternating combinations of dry and hydrated bentonite were then used to seal remaining borehole voids between the soil vapor screens and the remainder of the borehole to ground surface. The upper ends of the Nylaflow® tubing were sealed with 0.25-inch two-way valves. Soil vapor probes were completed with 5-inch diameter, flush mounted covers.

No sooner than 48-hours following probe installation, soil vapor samples were collected on 26 August 2015 in Summa canisters. The soil vapor samples were analyzed in the lab by Eurofins Calscience for VOCs by EPA Method TO-15 and fixed gases by ASTM method D-1946.

During sampling, a leak check compound (helium gas) was used to fill (or "charge") a hood that was placed over the wellhead to act as a tracer compound to monitor for

surface air leaks during sampling. Tracer compound analytical results indicated that ambient intrusion of surface gases did not impact the representativeness of the samples.

The VOC analytical results of the soil vapor sampling activities are presented in Table 4 and are presented in the following section. Soil vapor laboratory analytical reports are provided in Appendix B-2.

RESULTS

Introduction

The detectable laboratory analytical results for the soil and soil vapor are summarized in Tables 1 (soil total metals), 2 (soil soluble metals), 3 (soil TPH), and 4 (soil vapor VOCs and fixed gases). The laboratory analytical reports are included in Appendix B. The analytical results are summarized in the following sub-sections by media.

A continuous soil core was collected from each of the seven boring locations and visually logged for lithology in accordance with the Unified Soil Classification System (USCS) by the onsite field engineer. Borings were advanced to a depth of approximately10 ft bgs. Boring logs depicting soil conditions encountered with depth are presented in Appendix A. Soils beneath the Site consist of interbedded layers of sand and silt, with some gravel. In general, soils in the upper 5 feet were found to consist of silty sand, sandy silt and silt with some gravel. At depths of 5 to 10 feet, the subsurface materials mostly contain sand with gravel and silty sand.

Investigation derived wastes (IDW), which included soil cores recovered from each boring, but not selected for laboratory analysis, as well as decontamination fluids, were stored on-Site in a labeled 55-gallon drum, pending laboratory analysis. Based on the results presented later in this section, LACDPW will be managing the IDW along with other soils to be handled in the headworks area.

Soil Sampling Results

A total of 18 soil samples were analyzed from the seven (7) soil borings. Initially fourteen (14) samples were analyzed for TPH by EPA Method 8015B (M) and Title 22 metals by EPA Method 6010B/7471A from depths of approximately 1 and 10 ft bgs. More testing was performed subsequently based on the results of the initial testing. Field observations of recovered soil cores did not indicate significant staining or odors. The following sections present the results of the analyses.

Total Petroleum Hydrocarbon (TPH)

TPH was analyzed for gasoline, diesel and motor oil ranges and the results are summarized in Table 3. The results of TPH analysis on fourteen (14) soil samples show non-detect concentrations in the C_4-C_{10} carbon range (gasoline). TPH concentrations in the C_{10}-C_{22} carbon range (diesel) and in the C_{22}-C_{32} carbon range (motor oil) were not detected in any of the soils samples except for SV-1, S-2, and S-3 at approximately 1 ft bgs. The detected concentrations of TPH are below the action levels (i.e., 100-10,000 mg/kg for diesel range and motor oil range).

Title 22 Metals

Soil analytical results for Title 22 metals are summarized in Table 1. Table 1 also includes the U.S. EPA, Region 9 Screening Levels (RSLs) for industrial and residential soils for comparison [U.S. EPA, 2014]. The California Code of Regulations Title 22 regulatory thresholds for metals characterization as hazardous materials, Total Threshold Limit Concentration (TTLC) and Soluble Threshold Limit Concentration (STLC), as well as the general guideline for performing soluble analytical testing (10 times STLC levels) are included in Table 1 as well.

As listed in Table 1, Title 22 metals were detected in soil samples collected from borings SV-1, S-2, S-3, S-4, S-5, S-6, and SV-7. Barium, beryllium, cadmium, chromium, cobalt, copper, molybdenum, nickel, vanadium, and zinc were detected in soil samples. However, the detected concentrations of these metals were below EPA RSLs for industrial and residential land use. Arsenic was detected at concentrations above the EPA RSLs for residential land use in the soil samples collected at a depth of 1 ft bgs at location S-4 and lead concentrations of higher than the EPA RSLs for residential were found at 1.5 ft bgs at S-3.

Although detected arsenic concentrations exceed the RSLs for residential soil, detected arsenic concentrations in soil samples are within Southern California background. The DTSC website document: "Evaluation of Arsenic as a Chemical of Potential Concern at Proposed School Sites in the Los Angeles Area (not dated)" reports the 95% Upper Confidence Limit of the 99th percentile concentration ($C_{UL0.95(X0.99)}$) for arsenic in Los Angeles Unified School District as 11.3 mg/kg and states that: "If all the onsite samples are less than the $C_{UL0.95(X0.99)}$ then arsenic can be eliminated as a chemical of potential concern at the site." The highest reported arsenic concentration in the soil samples analyzed from the Site is 1.35 mg/kg.

Analytical laboratory results for total metals also showed total lead concentrations of higher than 10 times STLC in SV-1, S-2, S-3 and S-6 samples conducted at a depth of approximately 1 ft bgs. Subsequently the Waste Extraction Test (WET) analysis was performed on these samples using EPA Method 6010B STLC ICP and 6020 STLC ICP/MS. The WET analysis resulted in lead concentrations of higher than the STLC action level (i.e., 5 mg/l) only in samples conducted from approximately 1 ft bgs at locations S-2 and S-3. To further delineate the vertical extent of lead concentrations, soil samples collected at depths of 3 and 7 ft bgs at S-2 and S-3 locations were analyzed for both total and soluble lead. The S-2 and S-3 samples collected at 3 ft bgs showed lead concentrations of higher than STLC action level (i.e., 5 mg/l) whereas S-2 and S-3 samples collected at 7 ft bgs did not show lead concentrations of higher than the STLC action level [Table 2].

With the exception of arsenic and lead, the laboratory metals results were either: (i) not detected at concentrations above laboratory reporting limits; or (ii) reported at concentrations above laboratory reporting limits but below their respective industrial and residential RSLs, TTLCs and 10 times STLCs.

Soil Vapor Sampling Results

Two soil vapor samples were collected from soil vapor probes installed at 10 ft bgs at soil boring locations SV-1 and SV-7. Soil vapor samples were collected in Summa canisters and were analyzed by Eurofins Calscience laboratory for VOCs using EPA Method TO-15 and for fixed gases using ASTM Method D-1946. Table 4 summarizes the soil vapor VOC and fixed gases analytical results.

As listed in Table 4, a total of thirteen VOCs were detected in soil vapor samples, including acetone, benzene, 2-butanone, 1,4-dichlorobenzene, dichlorodifluoromethane, ethylbenzene, 4-ethyltoluene, tetrachloroethene, toluene, 1,2,4-trimethylbenzene, 1,3,5-trimethylbenzene, o-xylene, and p/m-xylene. The number of detected VOCs and also the VOC concentrations (with the only exception of 1,4-Dichlorobenzene) at SV-1 are higher than those at SV-7. The VOCs were detected at microgram per cubic meter (ug/m3) levels, below industrial guidance thresholds (e.g., California Human Health Screening Levels).

Also as listed in Table 4, three fixed gases were detected in soil vapor samples, inducing carbon dioxide, oxygen (+argon) and nitrogen. Similar concentrations of these gases were detected during field monitoring of sample collection at SV-1 and SV-7. Methane was not detected at the sampling locations.

SUMMARY AND CONCLUSIONS

An assessment of soil and soil vapor was conducted at the Site to assess potential impacts related to the areas of potential concern. Areas of potential concern are related to historical and current uses of the Site and included:

- The closed San Fernando City Landfill and the oil and gas wells located adjacent to the Site (northeast of the Site) are potential sources of gas migration to the Site;
- The underground storage tanks (UST) that were located on-Site at 10450 Arleta Avenue; and
- Petroleum hydrocarbons and lead that were detected in soil samples during previous subsurface investigations at the Site, especially those in the vicinity of the hazardous materials storage area.

In summary, TPH was not detected at concentrations above the action levels. With the exception of arsenic, and lead, concentrations of metals detected in soil samples were below US EPA industrial and residential screening levels. Concentrations of arsenic detected in soil samples are within background values for Southern California soils. Concentrations of lead were further delineated vertically by use of WET analysis. Concentration of lead in shallow samples collected at 1 and 3 ft bgs at locations near the hazardous materials storage area exceeded the STLC level for lead. The locations of the soil samples with notable lead concentrations are consistent with a previous subsurface ESA [Kleinfelder, 2003] and the location of a hazardous materials storage container at the Site. According to the LACDPW personnel, Mr. John Bodenchak, the stored material is primarily paint. The lead concentrations remained below the STLC level at 7 ft bgs.

A number of VOCs and fixed gases were detected in soil vapor samples. The VOC detections are below actionable thresholds given the current use of the Site and future use as recreational open space. If surface uses change, additional sampling may be warranted, to confirm these values are below regulatory thresholds for the intended use. The absence of detectable levels of methane at the two soil vapor sampling locations provides additional evidence that the closed landfill and nearby oil wells do not appear to be of significant environmental concern to the Site.

LIMITATIONS AND CLOSURE

Geosyntec services were performed and this report has been prepared in accordance with generally accepted professional standards of care applicable to the scope of services authorized by the client, and no other warranty is provided in connection therewith.

Consistent with applicable professional standards of care, our opinions and recommendations were based in part on data furnished by others. Although we were not able to independently verify such data, we did evaluate these data to determine whether it was consistent with other information that we developed in the course of our performance of the scope of services.

Geosyntec appreciates the opportunity to provide these environmental services to BonTerra Psomas in support of this important LACDPW project. Please contact the individuals below if you have questions regarding the content of this Report.

Sincerely,

Zahra A. Amini, Ph.D.
Engineer

Eric Smalstig, P.E.
Principal

Attachments

REFERENCES

Kleinfelder, Inc., [2003], "Report of limited Subsurface Environmental Site Assessment, Pacoima Spreading Grounds Headworks, 10450 Arleta Avenue, Pacoima, California," dated 15 April 2003.

Geosyntec, [2015], "Phase I Environmental Site Assessment, Pacoima Spreading Grounds, Los Angeles, California," dated 26 June 2015.

United States Environmental Protection Agency (U.S. EPA), [2015], "Regional Screening Levels (RSLs), Region 9," http://www.epa.gov/region09/superfund/prg. June.

TABLES

TABLE 1
Soil Metal Data Summary – Total Metals Results
Limited Phase II Site Assessment
Pacoima Spreading Grounds Headworks

					Location/Depth (ft)	**SV-1**		**S-2**				**S-3**				**S-4**		**S-5**		**S-6**		**SV-7**	
Screening Value	**RSL (I)**	**RSL (R)**	**TTLC**	**STLC**	**10 x STLC**	**1**	**9**	**1**	**3**	**7**	**10**	**1.5**	**3**	**7**	**9**	**1**	**9**	**1**	**10.5**	**1**	**9**	**1**	**10**
Antimony	470	31	500	15	150	ND	ND	ND	-	-	ND	ND	-	-	ND	ND	ND	ND	ND	ND	ND	ND	ND
Arsenic	3	1	500	5	50	ND	ND	ND	-	-	ND	0.896	-	-	ND	1.35	ND	ND	ND	ND	ND	ND	ND
Barium	220,000	15,000	10,000	100	1,000	212	105	312	-	-	71.7	306	-	-	147	134	86.4	128	123	242	91.7	180	223
Beryllium	2,300	160	75	0.75	7.5	0.352	ND	ND	-	-	ND	ND	-	-	ND	ND	ND	ND	ND	0.434	ND	ND	0.349
Cadmium	980	70	100	1	10	1.69	0.732	1.69	-	-	0.655	2.84	-	-	1.01	1.01	0.719	0.903	0.855	1.81	0.673	1.02	1.39
Chromium	120,000	1,800,000	2,500	560/5.0*	50**	22.7	7.23	10.5	-	-	9.31	11.6	-	-	14.7	12.3	6.36	11.4	11.0	26.2	5.66	11.1	17.1
Cobalt	350	23	8,000	80	800	17.8	8.45	8.88	-	-	6.22	13.6	-	-	11.4	11.3	7.39	10.6	9.86	20.4	7.56	11.7	16.2
Copper	47,000	3,100	2,500	25	250	28.1	11.8	27.8	-	-	9.94	108	-	-	14.7	20.0	11.0	16.5	40.7	37.7	10.8	18.9	19.8
Lead	800	400	350	5	50	53.6	0.518	117	173	1.05	0.663	515	58.6	15.9	4.18	7.42	0.681	2.25	20.7	66.6	0.897	3.49	1.73
Mercury	40	9	20	0.2	2	ND	ND	ND	-	-	ND	ND	-	-	ND	ND	ND	ND	ND	ND	ND	ND	ND
Molybdenum	5,800	390	3,500	350	3,500	ND	ND	ND	-	-	1.86	ND	-	-	ND	ND	ND	ND	0.715	ND	ND	ND	ND
Nickel	22,000	1,500	2,000	20	200	20.1	5.62	14.9	-	-	3.95	13.4	-	-	10.2	9.72	4.67	8.65	10.9	20.3	4.30	8.51	12.5
Selenium	5,800	390	100	1	10	ND	ND	ND	-	-	ND	ND	-	-	ND	ND	ND	ND	ND	ND	ND	ND	ND
Silver	5,800	390	500	5	50	ND	ND	ND	-	-	ND	ND	-	-	ND	ND	ND	ND	ND	ND	ND	ND	ND
Thallium	1	12	700	7	70	ND	ND	ND	-	-	ND	ND	-	-	ND	ND	ND	ND	ND	ND	ND	ND	ND
Vanadium	5,800	390	2,400	24	240	48.6	15.5	23.5	-	-	11.9	14.4	-	-	24.3	25.1	13.2	19.1	26.2	50.1	13.2	22.2	30.9
Zinc	34,000	350,000	5,000	250	2,500	97.2	26.9	232	-	-	19.8	383	-	-	43.8	49.6	22.6	39.2	37.3	104	24.1	44.1	46.2

Notes:

Samples Collected on 08/20/2015
Analyzed using EPA method 6010B and 7471A
Results units in mg/kg - Milligrams per kilogram
ND - Not Detected. Parameter not detected above laboratory reporting limit
RSL - Regional Screening Level. (I) = Industrial Soil; (R) = Residential Soil. Values from Regional Screening Level Table from "Regional Screening Levels for Chemical Contaminants at Superfund Sites" (U.S. EPA Region 9, May 2014).
TTLC - Total Threshold Limit Concentration (mg/kg)
STLC – Soluble Threshold Limit Concentration (mg/l)
Shaded value indicates reported detection above screening levels, TTLC or 10 x STLC
* Must meet both the STLC limit at 560 and EPA TCLP limit at 5 mg/l
** 10 times the TCLP value of 5 mg/l

TABLE 2
Soil Lead Analysis Data Summary – Soluble Metals Results
Limited Phase II Site Assessment
Pacoima Spreading Grounds Headworks

	Location/ Depth (ft)	**SV-1**	**S-2**			**S-3**			**S-6**
Screening Value	**STLC**	**1**	**1**	**3**	**7**	**1.5**	**3**	**7**	**1**
Lead	5	0.733	11.7	11.5	ND	15.6	5.89	0.275	0.969

Notes:

Samples Collected on 08/20/2015
Analyzed using EPA method 6020 STLC ICP/MS Metals (Aqueous)
All units in mg/l - Milligrams per liter
ND - Not Detected. Parameter not detected above laboratory reporting limit
STLC – Soluble Threshold Limit Concentration (mg/l)
Shaded value indicates reported detection above STLC

TABLE 3
Soil TPH Data Summary
Limited Phase II Site Assessment
Pacoima Spreading Grounds Headworks

		Location/ Depth (ft)	**SV-1**		**S-2**		**S-3**		**S-4**		**S-5**		**S-6**		**SV-7**	
Screening Value	**RSL (I*)**	**RSL (R*)**	**1**	**9**	**1**	**10**	**1.5**	**9**	**1**	**9**	**1**	**10.5**	**1**	**9**	**1**	**10**
TPH as Motor Oil	3.5E+6	2.3E+5	260	ND	86	ND	160	ND	ND	ND	ND	ND	ND	ND	ND	ND
TPH as Diesel	3.5E+6	2.3E+5	25	ND	21	ND	19	ND	ND	ND	ND	ND	ND	ND	ND	ND
TPH as Gasoline	--	--	ND	ND	ND	ND	ND	ND	ND	ND	ND	ND	ND	ND	ND	ND

Notes:

Samples Collected on 08/20/2015
Analyzed using EPA method 8015B (M)
All units in mg/kg - Milligrams per kilogram
ND - Not Detected. Parameter not detected above laboratory reporting limit
*The Regional Screening Levels (RSLs) [U.S. EPA, June 2015] are for high aliphatic (i.e., linear chain) total petroleum hydrocarbons, carbon chain length of 19 to 32 carbon atoms, due to the presence of the two classes of hydrocarbons detected (i.e., motor oil and diesel range) by the laboratory. Laboratory results did not indicate the presence of aromatic (ring compound) petroleum hydrocarbons (e.g., gasoline range hydrocarbons)

TABLE 4
Soil Vapor Data Summary
Limited Phase II Site Assessment
Pacoima Spreading Grounds Headworks

Location	SV-1	SV-7	RSL (R)	RSL (I)
Depth (ft)	**10**	**10**		
VOCs				
Acetone	22	14	3.2E+07	2.8E+08
Benzene	36	ND	3.6E+02	3.2E+03
2-Butanone	8.5	7.7	NL	NL
1,4-Dichlorobenzene	5.0	7.1	2.6E+02	2.2E+03
Dichlorodifluoromethane	2.7	ND	1.0E+05	8.8E+05
Ethylbenzene	15	ND	1.1E+03	9.8E+03
4-Ethyltoluene	8.7	ND	NL	NL
Tetrachloroethene	47	21	1.1E+04	9.4E+04
Toluene	200	ND	5.2E+06	4.4E+07
1,2,4-Trimethylbenzene	23	ND	7.3E+03	6.2E+04
1,3,5-Trimethylbenzene	7.9	ND	NL	NL
o-Xylene	26	ND	1.0E+05	8.8E+05
p/m-Xylene	100	ND	1.0E+05	8.8E+05
Fixed Gases				
Carbon Dioxide	1.95	2.48	NA	NA
Oxygen (+Argon)	21.2	20.6	NA	NA
Nitrogen	76.9	76.9	NA	NA

Notes:

Samples Collected on 08/26/2015
Analyzed using EPA method TO-15 and ASTM method D-1946
All units in ug/m^3- Micrograms per cubic meter
ND - Not Detected. Parameter not detected above laboratory reporting limit
NL-Not Listed
NA-Not Applicable
RSL - Regional Screening Level. (I) = Industrial Soil; (R) = Residential Soil. Values from "Regional Screening Level Table" by U.S. EPA, June 2015 and "Attenuation Factors for Preliminary Screening Evaluations" by DTSC-Cal/EPA, October 2011

FIGURES

Site Location
Pacoima Spreading Grounds Headworks
Los Angeles, California

3,000 1,500 0 3,000 6,000 Feet

Geosyntec consultants

Figure 1

Project No: HR1507 | October 2015

S:\GIS\HR1507\Project\PSG_SiteLoc.mxd c.c. 10/2/2015

Legend

- Soil Sampling Location
- Soil and Soil Vapor Sampling Location
- Indicating Potential Area of Concern

ft bgs = feet below ground surface
Service Layer Credits: Google Earth: May 2015

Site Map
Pacoima Spreading Grounds Headworks
Los Angeles, California

0 150 300 600 Feet

Geosyntec consultants

Project No: HR1507 | October 2015

Figure 2

S:\GIS\HR1507\Project\areofConcern.mxd cc 10/2/2015

SOIL AND SOIL GAS SAMPLING

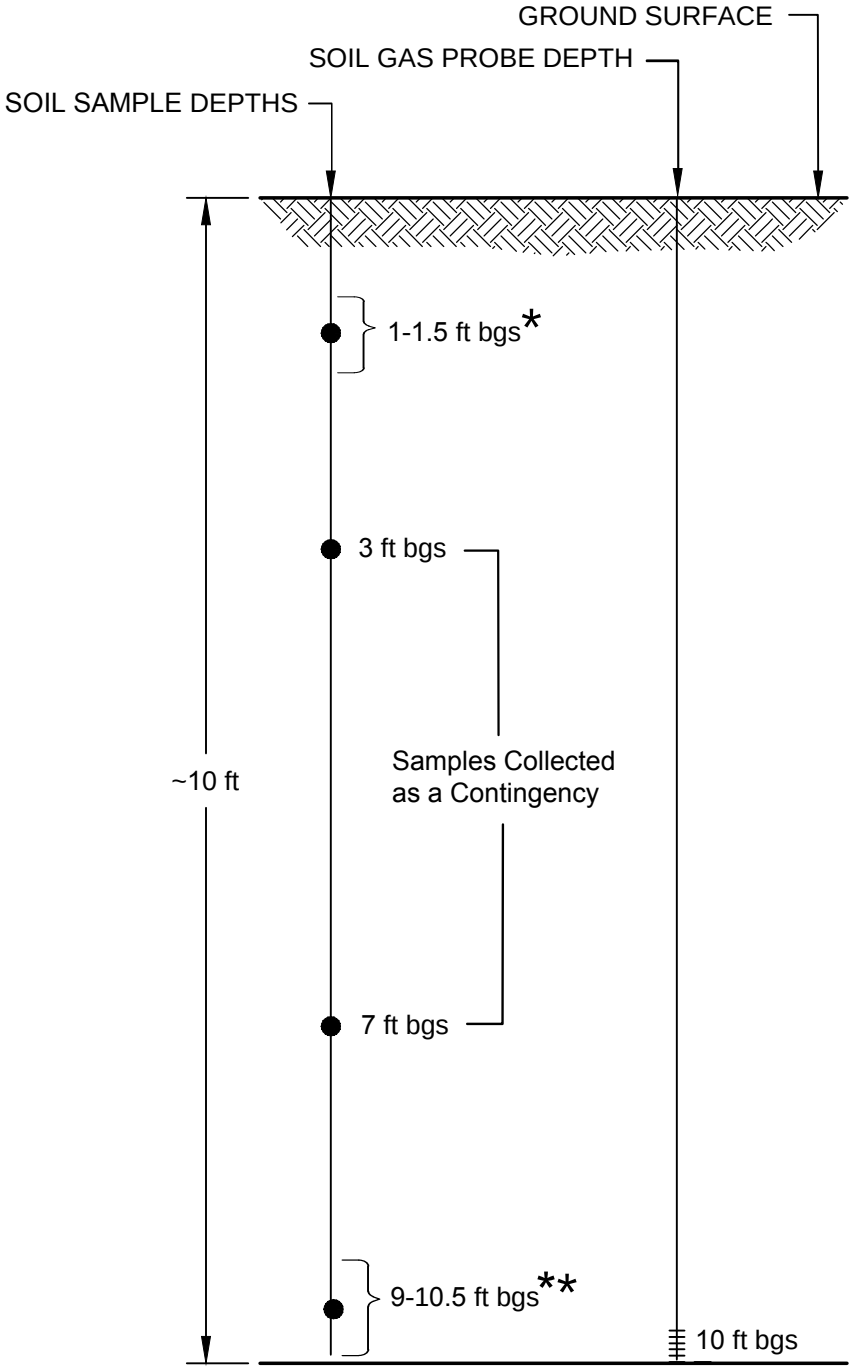

LEGEND

ft bgs	FEET BELOW GROUND SURFACE
*	1.5 ft bgs at location S-3
**	9 ft bgs at locations SV-1, S-3, S-4 and S-6; 10.5 ft bgs at location S-5

NOT TO SCALE

Sampling Depth Schematic
Pacoima Spreading Grounds Headworks
Los Angeles, California

Geosyntec consultants

Project No: HR1507

October 2015

Figure 3

N:\CACADD\OXY LA VERNE\OXY LA VERNE-HR1408\1480F002.dwg 8/17/15 20:58 kyko3_000

APPENDIX A

SOIL BORING LOGS

Geosyntec consultants
2100 Main St
Suite 150
Huntington Beach, CA 92648
Tel: (714) 969-0800
Fax: (714) 969-0820

GS FORM: WELL BORE 01/04

BOREHOLE LOG

BORING	**SV-1**		**SHEET 1 OF 1**
START DRILL DATE	Aug 20, 15	**ELEVATION DATA:**	
FINISH DRILL DATE	Aug 20, 15	**GROUND SURF. (Ft)**	
LOCATION	San Fernando Valley, Ca	**TOP OF CASING (Ft)**	
PROJECT	Pacoima Spreading Grounds	**DATUM**	
NUMBER	HR1507		

DEPTH (ft-bgs)	DESCRIPTION 1) Unit/Formation, Mem. 2) USCS Name 3) Color 4) Moisture 5) Percent Grain Size 6) Plasticity 7) Density/Consistency 8) Structure 9) Other (Mineralization, Discoloration, Odor, etc.)	GRAPHIC LOG	WELL LOG	GROUNDWATER OR STRUCTURE	ELEVATION (ft)	SAMPLE NO.	TYPE	BLOWS PER 6"	RECOVERY (%)	PID/FID (ppm)	TIME (00:00)	COMMENTS 1) Rig Behavior 2) Air Monitoring
	Sandy Silt (ML); dark brown; moist; medium.											
	At 3' bgs, grading to lighter brown color.											Boring advanced using direct push rig
5	Well graded sand with gravel (SW); light gray; dry; medium.											
10	Total Depth = 10' bgs											
15												
20												

CONTRACTOR	InterPhase	**NORTHING**	1918693.43
EQUIPMENT	Geoprobe Model 6600	**EASTING**	6427789.33
DRILL MTHD	Direct Push	**COORDINATE SYSTEM:**	
DIAMETER	1.5" (nominal)		
LOGGER	V. Manickam	**REVIEWER**	

NOTES: Coordinates determined by hand-held survey (Trimble unit), based on State Plane 1983 NAD; ft bgs: feet below ground surface.

SEE KEY SHEET FOR SYMBOLS AND ABBREVIATIONS

Geosyntec consultants
2100 Main St
Suite 150
Huntington Beach, CA 92648
Tel: (714) 969-0800
Fax: (714) 969-0820

GS FORM: WELL BORE 01/04

BOREHOLE LOG

BORING	**S-2**		**SHEET 1 OF 1**
START DRILL DATE	Aug 20, 15	**ELEVATION DATA:**	
FINISH DRILL DATE	Aug 20, 15	**GROUND SURF. (Ft)**	
LOCATION	San Fernando Valley, Ca	**TOP OF CASING (Ft)**	
PROJECT	Pacoima Spreading Grounds	**DATUM**	
NUMBER	HR1507		

DEPTH (ft-bgs)	DESCRIPTION 1) Unit/Formation, Mem. 2) USCS Name 3) Color 4) Moisture 5) Percent Grain Size 6) Plasticity 7) Density/Consistency 8) Structure 9) Other (Mineralization, Discoloration, Odor, etc.)	GRAPHIC LOG	WELL LOG	GROUNDWATER OR STRUCTURE	ELEVATION (ft)	SAMPLE: SAMPLE NO.	SAMPLE: TYPE	SAMPLE: BLOWS PER 6"	SAMPLE: RECOVERY (%)	SAMPLE: PID/FID (ppm)	SAMPLE: TIME (00:00)	COMMENTS 1) Rig Behavior 2) Air Monitoring
	Silty Sand (SM); grayish brown; moist; fine to medium.											
	At 3' bgs, grading to darker brown color.											
5	Well graded sand with gravel (SW); light gray; moist; medium to coarse.											
10												
	Total Depth = 10.5' bgs											
15												
20												

CONTRACTOR	InterPhase	**NORTHING**	1918450.37
EQUIPMENT	Geoprobe Model 6600	**EASTING**	6427655.18
DRILL MTHD	Direct Push	**COORDINATE SYSTEM:**	
DIAMETER	1.5" (nominal)		
LOGGER	V. Manickam	**REVIEWER**	

NOTES: Coordinates determined by hand-held survey (Trimble unit), based on State Plane 1983 NAD; ft bgs: feet below ground surface.

SEE KEY SHEET FOR SYMBOLS AND ABBREVIATIONS

Geosyntec consultants
2100 Main St
Suite 150
Huntington Beach, CA 92648
Tel: (714) 969-0800
Fax: (714) 969-0820

GS FORM: WELL BORE 01/04

BOREHOLE LOG

BORING S-3 **SHEET** 1 **OF** 1
START DRILL DATE Aug 20, 15 **ELEVATION DATA:**
FINISH DRILL DATE Aug 20, 15 **GROUND SURF. (Ft)**
LOCATION San Fernando Valley, Ca **TOP OF CASING (Ft)**
PROJECT Pacoima Spreading Grounds **DATUM**
NUMBER HR1507

DEPTH (ft-bgs)	DESCRIPTION 1) Unit/Formation, Mem. 2) USCS Name 3) Color 4) Moisture 5) Percent Grain Size 6) Plasticity 7) Density/Consistency 8) Structure 9) Other (Mineralization, Discoloration, Odor, etc.)	GRAPHIC LOG	WELL LOG	GROUNDWATER OR STRUCTURE	ELEVATION (ft)	SAMPLE NO.	TYPE	BLOWS PER 6"	RECOVERY (%)	PID/FID (ppm)	TIME (00:00)	COMMENTS 1) Rig Behavior 2) Air Monitoring
	Silty Sand (SM); brown; moist; fine to medium.											
	At 4' bgs, more fines present in soil.											
5												
	At 8' bgs, change to dark brown, increasing moisture.											
10												
	Total Depth = 10' bgs.											
15												
20												

CONTRACTOR InterPhase **NORTHING** 1918399.51
EQUIPMENT Geoprobe Model 6600 **EASTING** 6427691.98
DRILL MTHD Direct Push **COORDINATE SYSTEM:**
DIAMETER 1.5" (nominal)
LOGGER V. Manickam **REVIEWER**

NOTES: Coordinates determined by hand-held survey (Trimble unit), based on State Plane 1983 NAD; ft bgs: feet below ground surface.

SEE KEY SHEET FOR SYMBOLS AND ABBREVIATIONS

Geosyntec consultants
2100 Main St
Suite 150
Huntington Beach, CA 92648
Tel: (714) 969-0800
Fax: (714) 969-0820

GS FORM: WELL BORE 01/04

BOREHOLE LOG

BORING S-4 **SHEET** 1 **OF** 1
START DRILL DATE Aug 20, 15 **ELEVATION DATA:**
FINISH DRILL DATE Aug 20, 15 **GROUND SURF. (Ft)**
LOCATION San Fernando Valley, Ca **TOP OF CASING (Ft)**
PROJECT Pacoima Spreading Grounds **DATUM**
NUMBER HR1507

DEPTH (ft-bgs)	DESCRIPTION (1) Unit/Formation, Mem. (2) USCS Name (3) Color (4) Moisture (5) Percent Grain Size (6) Plasticity (7) Density/Consistency (8) Structure (9) Other (Mineralization, Discoloration, Odor, etc.)	GRAPHIC LOG	WELL LOG	GROUNDWATER OR STRUCTURE	ELEVATION (ft)	SAMPLE NO.	TYPE	BLOWS PER 6"	RECOVERY (%)	PID/FID (ppm)	TIME (00:00)	COMMENTS (1) Rig Behavior (2) Air Monitoring
	Well graded sand with gravel (SW); light gray; dry; medium to coarse.											
	Silt (ML); light gray; moist; fine.											
	Silty Sand (ML); light gray; moist; fine to medium.											
5												
	Well graded sand with gravel (SW); light gray; moist; medium to coarse.											
10												
	Total Depth = 10' bgs											
15												
20												

CONTRACTOR InterPhase
EQUIPMENT Geoprobe Model 6600
DRILL MTHD Direct Push
DIAMETER 1.5" (nominal)
LOGGER V. Manickam **REVIEWER**

NORTHING 1917880.33
EASTING 6427242.84
COORDINATE SYSTEM:

NOTES: Coordinates determined by hand-held survey (Trimble unit), based on State Plane 1983 NAD; ft bgs: feet below ground surface.

SEE KEY SHEET FOR SYMBOLS AND ABBREVIATIONS

Geosyntec consultants
2100 Main St
Suite 150
Huntington Beach, CA 92648
Tel: (714) 969-0800
Fax: (714) 969-0820

GS FORM: WELL BORE 01/04

BOREHOLE LOG

BORING	**S-5**	**SHEET**	**1 OF 1**
START DRILL DATE	Aug 20, 15	**ELEVATION DATA:**	
FINISH DRILL DATE	Aug 20, 15	**GROUND SURF. (Ft)**	
LOCATION	San Fernando Valley, Ca	**TOP OF CASING (Ft)**	
PROJECT	Pacoima Spreading Grounds	**DATUM**	
NUMBER	HR1507		

DEPTH (ft-bgs)	DESCRIPTION 1) Unit/Formation, Mem. 2) USCS Name 3) Color 4) Moisture 5) Percent Grain Size 6) Plasticity 7) Density/Consistency 8) Structure 9) Other (Mineralization, Discoloration, Odor, etc.)	GRAPHIC LOG	WELL LOG	GROUNDWATER OR STRUCTURE	ELEVATION (ft)	SAMPLE NO.	TYPE	BLOWS PER 6"	RECOVERY (%)	PID/FID (ppm)	TIME (00:00)	COMMENTS 1) Rig Behavior 2) Air Monitoring
	Silty Sand (SM); gray; moist; fine to medium.											
5	Silt (ML); gray; moist; fine.											
	At 7' bgs, grading to dark gray brown color.											
	Poorly graded sand (SP); light gray; dry; medium to coarse.											
10	Total Depth = 10.5' bgs.											
15												
20												

CONTRACTOR	InterPhase	**NORTHING**	1917729.68
EQUIPMENT	Geoprobe Model 6600	**EASTING**	6427204.50
DRILL MTHD	Direct Push	**COORDINATE SYSTEM:**	
DIAMETER	1.5" (nominal)		
LOGGER	V. Manickam	**REVIEWER**	

NOTES: Coordinates determined by hand-held survey (Trimble unit), based on State Plane 1983 NAD; ft bgs: feet below ground surface.

SEE KEY SHEET FOR SYMBOLS AND ABBREVIATIONS

Geosyntec consultants
2100 Main St
Suite 150
Huntington Beach, CA 92648
Tel: (714) 969-0800
Fax: (714) 969-0820

GS FORM: WELL BORE 01/04

BOREHOLE LOG

BORING S-6 **SHEET** 1 **OF** 1
START DRILL DATE Aug 20, 15 **ELEVATION DATA:**
FINISH DRILL DATE Aug 20, 15 **GROUND SURF. (Ft)**
LOCATION San Fernando Valley, Ca **TOP OF CASING (Ft)**
PROJECT Pacoima Spreading Grounds **DATUM**
NUMBER HR1507

DEPTH (ft-bgs)	DESCRIPTION 1) Unit/Formation, Mem. 2) USCS Name 3) Color 4) Moisture 5) Percent Grain Size 6) Plasticity 7) Density/Consistency 8) Structure 9) Other (Mineralization, Discoloration, Odor, etc.)	GRAPHIC LOG	WELL LOG	GROUNDWATER OR STRUCTURE	ELEVATION (ft)	SAMPLE NO.	TYPE	BLOWS PER 6"	RECOVERY (%)	PID/FID (ppm)	TIME (00:00)	COMMENTS 1) Rig Behavior 2) Air Monitoring
	Silt (ML); light brown; moist; fine.											
5												
	At 7' bgs, color change to gray.											
	Well graded sand with gravel (SW); light gray; moist; medium to coarse.											
10												
	Total Depth = 10' bgs.											
15												
20												

CONTRACTOR InterPhase **NORTHING** 1917902.62
EQUIPMENT Geoprobe Model 6600 **EASTING** 6427525.47
DRILL MTHD Direct Push **COORDINATE SYSTEM:**
DIAMETER 1.5" (nominal)
LOGGER V. Manickam **REVIEWER**

NOTES: Coordinates determined by hand-held survey (Trimble unit), based on State Plane 1983 NAD; ft bgs: feet below ground surface.

SEE KEY SHEET FOR SYMBOLS AND ABBREVIATIONS

Geosyntec consultants
2100 Main St
Suite 150
Huntington Beach, CA 92648
Tel: (714) 969-0800
Fax: (714) 969-0820

GS FORM: WELL BORE 01/04

BOREHOLE LOG

BORING SV-7 **SHEET** 1 **OF** 1
START DRILL DATE Aug 20, 15 **ELEVATION DATA:**
FINISH DRILL DATE Aug 20, 15 **GROUND SURF. (Ft)**
LOCATION San Fernando Valley, Ca **TOP OF CASING (Ft)**
PROJECT Pacoima Spreading Grounds **DATUM**
NUMBER HR1507

DEPTH (ft-bgs)	DESCRIPTION 1) Unit/Formation, Mem. 2) USCS Name 3) Color 4) Moisture 5) Percent Grain Size 6) Plasticity 7) Density/Consistency 8) Structure 9) Other (Mineralization, Discoloration, Odor, etc.)	GRAPHIC LOG	WELL LOG	GROUNDWATER OR STRUCTURE	ELEVATION (ft)	SAMPLE NO.	TYPE	BLOWS PER 6"	RECOVERY (%)	PID/FID (ppm)	TIME (00:00)	COMMENTS 1) Rig Behavior 2) Air Monitoring
	Silty Sand (SM) with gravel; light brown; moist; fine to medium.											
	At 2' to 4' bgs, off-white mineral veins.											
5												
	At 7' bgs, grading to lighter gray color.											
10	At 10' bgs, grading to reddish color.											
	Total Depth = 10' bgs											
15												
20												

CONTRACTOR InterPhase **NORTHING** 1918224.47
EQUIPMENT Geoprobe Model 6600 **EASTING** 6427673.61
DRILL MTHD Direct Push **COORDINATE SYSTEM:**
DIAMETER 1.5" (nominal)
LOGGER V. Manickam **REVIEWER**

NOTES: Coordinates determined by hand-held survey (Trimble unit), based on State Plane 1983 NAD; ft bgs: feet below ground surface.

SEE KEY SHEET FOR SYMBOLS AND ABBREVIATIONS

APPENDIX B

LABORATORY DATA

APPENDIX B-1

SOIL LABORATORY ANALYTICAL REPORT

eurofins | Calscience

WORK ORDER NUMBER: 15-08-1559

The difference is service

AIR | SOIL | WATER | MARINE CHEMISTRY

Analytical Report For

Client: Geosyntec Consultants

Client Project Name: PSG / HR1507-02

Attention: Zahra Amini
2100 Main Street, Suite 150
Huntington Beach, CA 92648-2460

Approved for release on 08/28/2015 by:
Stephen Nowak
Project Manager

ResultLink

Email your PM

Eurofins Calscience, Inc. (Calscience) certifies that the test results provided in this report meet all NELAC requirements for parameters for which accreditation is required or available. Any exceptions to NELAC requirements are noted in the case narrative. The original report of subcontracted analyses, if any, is attached to this report. The results in this report are limited to the sample(s) tested and any reproduction thereof must be made in its entirety. The client or recipient of this report is specifically prohibited from making material changes to said report and, to the extent that such changes are made, Calscience is not responsible, legally or otherwise. The client or recipient agrees to indemnify Calscience for any defense to any litigation which may arise.

eurofins | Calscience

Contents

Client Project Name: PSG / HR1507-02
Work Order Number: 15-08-1559

1 Work Order Narrative. 3

2 Sample Summary. 4

3 Detections Summary. 5

4 Client Sample Data. 10
4.1 EPA 8015B (M) TPH Motor Oil (Solid). 10
4.2 EPA 8015B (M) TPH Diesel (Solid). 13
4.3 EPA 8015B (M) TPH Gasoline Prep 5035 (Solid). 16
4.4 EPA 6010B/7471A CAC Title 22 Metals (Solid). 20
4.5 EPA 7471A Mercury (Solid). 35

5 Quality Control Sample Data. 37
5.1 MS/MSD. 37
5.2 LCS/LCSD. 41

6 Sample Analysis Summary. 47

7 Glossary of Terms and Qualifiers. 48

8 Chain-of-Custody/Sample Receipt Form. 49

eurofins | Calscience

Work Order Narrative

Work Order: 15-08-1559 Page 1 of 1

Condition Upon Receipt:

Samples were received under Chain-of-Custody (COC) on 08/21/15. They were assigned to Work Order 15-08-1559.

Unless otherwise noted on the Sample Receiving forms all samples were received in good condition and within the recommended EPA temperature criteria for the methods noted on the COC. The COC and Sample Receiving Documents are integral elements of the analytical report and are presented at the back of the report.

Holding Times:

All samples were analyzed within prescribed holding times (HT) and/or in accordance with the Calscience Sample Acceptance Policy unless otherwise noted in the analytical report and/or comprehensive case narrative, if required.

Any parameter identified in 40CFR Part 136.3 Table II that is designated as "analyze immediately" with a holding time of <= 15 minutes (40CFR-136.3 Table II, footnote 4), is considered a "field" test and the reported results will be qualified as being received outside of the stated holding time unless received at the laboratory within 15 minutes of the collection time.

Quality Control:

All quality control parameters (QC) were within established control limits except where noted in the QC summary forms or described further within this report.

Subcontractor Information:

Unless otherwise noted below (or on the subcontract form), no samples were subcontracted.

Additional Comments:

Air - Sorbent-extracted air methods (EPA TO-4A, EPA TO-10, EPA TO-13A, EPA TO-17): Analytical results are converted from mass/sample basis to mass/volume basis using client-supplied air volumes.

Solid - Unless otherwise indicated, solid sample data is reported on a wet weight basis, not corrected for % moisture. All QC results are always reported on a wet weight basis.

Return to Contents

eurofins | Calscience

Sample Summary

Client:	Geosyntec Consultants 2100 Main Street, Suite 150 Huntington Beach, CA 92648-2460	Work Order:	15-08-1559
		Project Name:	PSG / HR1507-02
		PO Number:	
		Date/Time Received:	08/21/15 14:10
		Number of Containers:	84
Attn:	Zahra Amini		

Sample Identification	Lab Number	Collection Date and Time	Number of Containers	Matrix
SV-1-1	15-08-1559-1	08/20/15 09:32	5	Solid
SV-1-9	15-08-1559-2	08/20/15 09:55	5	Solid
S-2-1	15-08-1559-3	08/20/15 07:45	5	Solid
S-2-10	15-08-1559-4	08/20/15 08:13	5	Solid
S-3-1.5	15-08-1559-5	08/20/15 08:43	5	Solid
S-3-9	15-08-1559-6	08/20/15 09:57	5	Solid
S-4-1	15-08-1559-7	08/20/15 10:42	5	Solid
S-4-9	15-08-1559-8	08/20/15 22:54	5	Solid
S-5-1	15-08-1559-9	08/20/15 14:43	5	Solid
S-5-10.5	15-08-1559-10	08/20/15 13:02	5	Solid
S-6-1	15-08-1559-11	08/20/15 12:09	5	Solid
S-6-9	15-08-1559-12	08/20/15 12:25	5	Solid
SV-7-1	15-08-1559-13	08/20/15 11:22	5	Solid
SV-7-10	15-08-1559-14	08/20/15 11:40	5	Solid
SV-1-3	15-08-1559-15	08/20/15 09:45	1	Solid
SV-1-7	15-08-1559-16	08/20/15 09:50	1	Solid
S-2-3	15-08-1559-17	08/20/15 07:50	1	Solid
S-2-7	15-08-1559-18	08/20/15 08:05	1	Solid
S-3-3	15-08-1559-19	08/20/15 08:50	1	Solid
S-3-7	15-08-1559-20	08/20/15 08:54	1	Solid
S-4-3	15-08-1559-21	08/20/15 10:53	1	Solid
S-4-7	15-08-1559-22	08/20/15 10:54	1	Solid
S-5-3	15-08-1559-23	08/20/15 12:40	1	Solid
S-5-7	15-08-1559-24	08/20/15 12:50	1	Solid
S-6-3	15-08-1559-25	08/20/15 12:22	1	Solid
S-6-7	15-08-1559-26	08/20/15 12:26	1	Solid
SV-7-3	15-08-1559-27	08/20/15 11:33	1	Solid
SV-7-7	15-08-1559-28	08/20/15 11:35	1	Solid

Return to Contents

eurofins | Calscience

Detections Summary

Client:	Geosyntec Consultants 2100 Main Street, Suite 150 Huntington Beach, CA 92648-2460	Work Order: Project Name: Received:	15-08-1559 PSG / HR1507-02 08/21/15
Attn:	Zahra Amini		

Client SampleID Analyte	Result	Qualifiers	RL	Units	Method	Extraction
SV-1-1 (15-08-1559-1)						
Barium	212		0.478	mg/kg	EPA 6010B	EPA 3050B
Beryllium	0.352		0.239	mg/kg	EPA 6010B	EPA 3050B
Cadmium	1.69		0.478	mg/kg	EPA 6010B	EPA 3050B
Chromium	22.7		0.239	mg/kg	EPA 6010B	EPA 3050B
Cobalt	17.8		0.239	mg/kg	EPA 6010B	EPA 3050B
Copper	28.1		0.478	mg/kg	EPA 6010B	EPA 3050B
Lead	53.6		0.478	mg/kg	EPA 6010B	EPA 3050B
Nickel	20.1		0.239	mg/kg	EPA 6010B	EPA 3050B
Vanadium	48.6		0.239	mg/kg	EPA 6010B	EPA 3050B
Zinc	97.2		0.957	mg/kg	EPA 6010B	EPA 3050B
TPH as Motor Oil	260	HD	25	mg/kg	EPA 8015B (M)	EPA 3550B
TPH as Diesel	25	HD	5.1	mg/kg	EPA 8015B (M)	EPA 3550B
SV-1-9 (15-08-1559-2)						
Barium	105		0.483	mg/kg	EPA 6010B	EPA 3050B
Cadmium	0.732		0.483	mg/kg	EPA 6010B	EPA 3050B
Chromium	7.23		0.242	mg/kg	EPA 6010B	EPA 3050B
Cobalt	8.45		0.242	mg/kg	EPA 6010B	EPA 3050B
Copper	11.8		0.483	mg/kg	EPA 6010B	EPA 3050B
Lead	0.518		0.483	mg/kg	EPA 6010B	EPA 3050B
Nickel	5.62		0.242	mg/kg	EPA 6010B	EPA 3050B
Vanadium	15.5		0.242	mg/kg	EPA 6010B	EPA 3050B
Zinc	26.9		0.966	mg/kg	EPA 6010B	EPA 3050B
S-2-1 (15-08-1559-3)						
Barium	312		0.503	mg/kg	EPA 6010B	EPA 3050B
Cadmium	1.69		0.503	mg/kg	EPA 6010B	EPA 3050B
Chromium	10.5		0.251	mg/kg	EPA 6010B	EPA 3050B
Cobalt	8.88		0.251	mg/kg	EPA 6010B	EPA 3050B
Copper	27.8		0.503	mg/kg	EPA 6010B	EPA 3050B
Lead	117		0.503	mg/kg	EPA 6010B	EPA 3050B
Nickel	14.9		0.251	mg/kg	EPA 6010B	EPA 3050B
Vanadium	23.5		0.251	mg/kg	EPA 6010B	EPA 3050B
Zinc	232		1.01	mg/kg	EPA 6010B	EPA 3050B
TPH as Motor Oil	86	HD	25	mg/kg	EPA 8015B (M)	EPA 3550B
TPH as Diesel	21	HD	4.9	mg/kg	EPA 8015B (M)	EPA 3550B

Return to Contents

* MDL is shown

eurofins | Calscience

Detections Summary

Client:	Geosyntec Consultants	Work Order:	15-08-1559
	2100 Main Street, Suite 150	Project Name:	PSG / HR1507-02
	Huntington Beach, CA 92648-2460	Received:	08/21/15
Attn:	Zahra Amini		Page 2 of 5

Client SampleID / Analyte	Result	Qualifiers	RL	Units	Method	Extraction
S-2-10 (15-08-1559-4)						
Barium	71.7		0.490	mg/kg	EPA 6010B	EPA 3050B
Cadmium	0.655		0.490	mg/kg	EPA 6010B	EPA 3050B
Chromium	9.31		0.245	mg/kg	EPA 6010B	EPA 3050B
Cobalt	6.22		0.245	mg/kg	EPA 6010B	EPA 3050B
Copper	9.94		0.490	mg/kg	EPA 6010B	EPA 3050B
Lead	0.663		0.490	mg/kg	EPA 6010B	EPA 3050B
Molybdenum	1.86		0.245	mg/kg	EPA 6010B	EPA 3050B
Nickel	3.95		0.245	mg/kg	EPA 6010B	EPA 3050B
Vanadium	11.9		0.245	mg/kg	EPA 6010B	EPA 3050B
Zinc	19.8		0.980	mg/kg	EPA 6010B	EPA 3050B
S-3-1.5 (15-08-1559-5)						
Arsenic	0.896		0.739	mg/kg	EPA 6010B	EPA 3050B
Barium	306		0.493	mg/kg	EPA 6010B	EPA 3050B
Cadmium	2.84		0.493	mg/kg	EPA 6010B	EPA 3050B
Chromium	11.6		0.246	mg/kg	EPA 6010B	EPA 3050B
Cobalt	13.6		0.246	mg/kg	EPA 6010B	EPA 3050B
Copper	108		0.493	mg/kg	EPA 6010B	EPA 3050B
Lead	515		0.493	mg/kg	EPA 6010B	EPA 3050B
Nickel	13.4		0.246	mg/kg	EPA 6010B	EPA 3050B
Vanadium	14.4		0.246	mg/kg	EPA 6010B	EPA 3050B
Zinc	383		0.985	mg/kg	EPA 6010B	EPA 3050B
TPH as Motor Oil	160	HD	25	mg/kg	EPA 8015B (M)	EPA 3550B
TPH as Diesel	19	HD	4.9	mg/kg	EPA 8015B (M)	EPA 3550B
S-3-9 (15-08-1559-6)						
Barium	147		0.500	mg/kg	EPA 6010B	EPA 3050B
Cadmium	1.01		0.500	mg/kg	EPA 6010B	EPA 3050B
Chromium	14.7		0.250	mg/kg	EPA 6010B	EPA 3050B
Cobalt	11.4		0.250	mg/kg	EPA 6010B	EPA 3050B
Copper	14.7		0.500	mg/kg	EPA 6010B	EPA 3050B
Lead	4.18		0.500	mg/kg	EPA 6010B	EPA 3050B
Nickel	10.2		0.250	mg/kg	EPA 6010B	EPA 3050B
Vanadium	24.3		0.250	mg/kg	EPA 6010B	EPA 3050B
Zinc	43.8		1.00	mg/kg	EPA 6010B	EPA 3050B

Return to Contents

* MDL is shown

eurofins | Calscience

Detections Summary

Client:	Geosyntec Consultants	Work Order:	15-08-1559
	2100 Main Street, Suite 150	Project Name:	PSG / HR1507-02
	Huntington Beach, CA 92648-2460	Received:	08/21/15
Attn:	Zahra Amini		

Client SampleID / Analyte	Result	Qualifiers	RL	Units	Method	Extraction
S-4-1 (15-08-1559-7)						
Arsenic	1.35		0.769	mg/kg	EPA 6010B	EPA 3050B
Barium	134		0.513	mg/kg	EPA 6010B	EPA 3050B
Cadmium	1.01		0.513	mg/kg	EPA 6010B	EPA 3050B
Chromium	12.3		0.256	mg/kg	EPA 6010B	EPA 3050B
Cobalt	11.3		0.256	mg/kg	EPA 6010B	EPA 3050B
Copper	20.0		0.513	mg/kg	EPA 6010B	EPA 3050B
Lead	7.42		0.513	mg/kg	EPA 6010B	EPA 3050B
Nickel	9.72		0.256	mg/kg	EPA 6010B	EPA 3050B
Vanadium	25.1		0.256	mg/kg	EPA 6010B	EPA 3050B
Zinc	49.6		1.03	mg/kg	EPA 6010B	EPA 3050B
S-4-9 (15-08-1559-8)						
Barium	86.4		0.508	mg/kg	EPA 6010B	EPA 3050B
Cadmium	0.719		0.508	mg/kg	EPA 6010B	EPA 3050B
Chromium	6.36		0.254	mg/kg	EPA 6010B	EPA 3050B
Cobalt	7.39		0.254	mg/kg	EPA 6010B	EPA 3050B
Copper	11.0		0.508	mg/kg	EPA 6010B	EPA 3050B
Lead	0.681		0.508	mg/kg	EPA 6010B	EPA 3050B
Nickel	4.67		0.254	mg/kg	EPA 6010B	EPA 3050B
Vanadium	13.2		0.254	mg/kg	EPA 6010B	EPA 3050B
Zinc	22.6		1.02	mg/kg	EPA 6010B	EPA 3050B
S-5-1 (15-08-1559-9)						
Barium	128		0.500	mg/kg	EPA 6010B	EPA 3050B
Cadmium	0.903		0.500	mg/kg	EPA 6010B	EPA 3050B
Chromium	11.4		0.250	mg/kg	EPA 6010B	EPA 3050B
Cobalt	10.6		0.250	mg/kg	EPA 6010B	EPA 3050B
Copper	16.5		0.500	mg/kg	EPA 6010B	EPA 3050B
Lead	2.25		0.500	mg/kg	EPA 6010B	EPA 3050B
Nickel	8.65		0.250	mg/kg	EPA 6010B	EPA 3050B
Vanadium	19.1		0.250	mg/kg	EPA 6010B	EPA 3050B
Zinc	39.2		1.00	mg/kg	EPA 6010B	EPA 3050B

Return to Contents

* MDL is shown

eurofins | Calscience

Detections Summary

Client:	Geosyntec Consultants	Work Order:	15-08-1559
	2100 Main Street, Suite 150	Project Name:	PSG / HR1507-02
	Huntington Beach, CA 92648-2460	Received:	08/21/15
Attn:	Zahra Amini		

Client SampleID / Analyte	Result	Qualifiers	RL	Units	Method	Extraction
S-5-10.5 (15-08-1559-10)						
Barium	123		0.508	mg/kg	EPA 6010B	EPA 3050B
Cadmium	0.855		0.508	mg/kg	EPA 6010B	EPA 3050B
Chromium	11.0		0.254	mg/kg	EPA 6010B	EPA 3050B
Cobalt	9.86		0.254	mg/kg	EPA 6010B	EPA 3050B
Copper	40.7		0.508	mg/kg	EPA 6010B	EPA 3050B
Lead	20.7		0.508	mg/kg	EPA 6010B	EPA 3050B
Molybdenum	0.715		0.254	mg/kg	EPA 6010B	EPA 3050B
Nickel	10.9		0.254	mg/kg	EPA 6010B	EPA 3050B
Vanadium	26.2		0.254	mg/kg	EPA 6010B	EPA 3050B
Zinc	37.3		1.02	mg/kg	EPA 6010B	EPA 3050B
S-6-1 (15-08-1559-11)						
Barium	242		0.521	mg/kg	EPA 6010B	EPA 3050B
Beryllium	0.434		0.260	mg/kg	EPA 6010B	EPA 3050B
Cadmium	1.81		0.521	mg/kg	EPA 6010B	EPA 3050B
Chromium	26.2		0.260	mg/kg	EPA 6010B	EPA 3050B
Cobalt	20.4		0.260	mg/kg	EPA 6010B	EPA 3050B
Copper	37.7		0.521	mg/kg	EPA 6010B	EPA 3050B
Lead	66.6		0.521	mg/kg	EPA 6010B	EPA 3050B
Nickel	20.3		0.260	mg/kg	EPA 6010B	EPA 3050B
Vanadium	50.1		0.260	mg/kg	EPA 6010B	EPA 3050B
Zinc	104		1.04	mg/kg	EPA 6010B	EPA 3050B
S-6-9 (15-08-1559-12)						
Barium	91.7		0.515	mg/kg	EPA 6010B	EPA 3050B
Cadmium	0.673		0.515	mg/kg	EPA 6010B	EPA 3050B
Chromium	5.66		0.258	mg/kg	EPA 6010B	EPA 3050B
Cobalt	7.56		0.258	mg/kg	EPA 6010B	EPA 3050B
Copper	10.8		0.515	mg/kg	EPA 6010B	EPA 3050B
Lead	0.897		0.515	mg/kg	EPA 6010B	EPA 3050B
Nickel	4.30		0.258	mg/kg	EPA 6010B	EPA 3050B
Vanadium	13.2		0.258	mg/kg	EPA 6010B	EPA 3050B
Zinc	24.1		1.03	mg/kg	EPA 6010B	EPA 3050B

Return to Contents

* MDL is shown

eurofins | Calscience

Detections Summary

Client:	Geosyntec Consultants 2100 Main Street, Suite 150 Huntington Beach, CA 92648-2460	Work Order: Project Name: Received:	15-08-1559 PSG / HR1507-02 08/21/15
Attn:	Zahra Amini		

Client SampleID Analyte	Result	Qualifiers	RL	Units	Method	Extraction
SV-7-1 (15-08-1559-13)						
Barium	180		0.485	mg/kg	EPA 6010B	EPA 3050B
Cadmium	1.02		0.485	mg/kg	EPA 6010B	EPA 3050B
Chromium	11.1		0.243	mg/kg	EPA 6010B	EPA 3050B
Cobalt	11.7		0.243	mg/kg	EPA 6010B	EPA 3050B
Copper	18.9		0.485	mg/kg	EPA 6010B	EPA 3050B
Lead	3.49		0.485	mg/kg	EPA 6010B	EPA 3050B
Nickel	8.51		0.243	mg/kg	EPA 6010B	EPA 3050B
Vanadium	22.2		0.243	mg/kg	EPA 6010B	EPA 3050B
Zinc	44.1		0.971	mg/kg	EPA 6010B	EPA 3050B
SV-7-10 (15-08-1559-14)						
Barium	223		0.490	mg/kg	EPA 6010B	EPA 3050B
Beryllium	0.349		0.245	mg/kg	EPA 6010B	EPA 3050B
Cadmium	1.39		0.490	mg/kg	EPA 6010B	EPA 3050B
Chromium	17.1		0.245	mg/kg	EPA 6010B	EPA 3050B
Cobalt	16.2		0.245	mg/kg	EPA 6010B	EPA 3050B
Copper	19.8		0.490	mg/kg	EPA 6010B	EPA 3050B
Lead	1.73		0.490	mg/kg	EPA 6010B	EPA 3050B
Nickel	12.5		0.245	mg/kg	EPA 6010B	EPA 3050B
Vanadium	30.9		0.245	mg/kg	EPA 6010B	EPA 3050B
Zinc	46.2		0.980	mg/kg	EPA 6010B	EPA 3050B

Subcontracted analyses, if any, are not included in this summary.

Return to Contents

* MDL is shown

eurofins | Calscience

Analytical Report

Geosyntec Consultants		Date Received:	08/21/15
2100 Main Street, Suite 150		Work Order:	15-08-1559
Huntington Beach, CA 92648-2460		Preparation:	EPA 3550B
		Method:	EPA 8015B (M)
		Units:	mg/kg
Project: PSG / HR1507-02			Page 1 of 3

Client Sample Number	Lab Sample Number	Date/Time Collected	Matrix	Instrument	Date Prepared	Date/Time Analyzed	QC Batch ID
SV-1-1	**15-08-1559-1-A**	**08/20/15 09:32**	**Solid**	**GC 46**	**08/24/15**	**08/25/15 17:55**	**150824B06**

Parameter	Result	RL	DF	Qualifiers
TPH as Motor Oil	260	25	1.00	HD

Surrogate	Rec. (%)	Control Limits	Qualifiers
n-Octacosane	114	61-145	

Client Sample Number	Lab Sample Number	Date/Time Collected	Matrix	Instrument	Date Prepared	Date/Time Analyzed	QC Batch ID
SV-1-9	**15-08-1559-2-A**	**08/20/15 09:55**	**Solid**	**GC 46**	**08/24/15**	**08/25/15 13:34**	**150824B06**

Parameter	Result	RL	DF	Qualifiers
TPH as Motor Oil	ND	25	1.00	

Surrogate	Rec. (%)	Control Limits	Qualifiers
n-Octacosane	99	61-145	

Client Sample Number	Lab Sample Number	Date/Time Collected	Matrix	Instrument	Date Prepared	Date/Time Analyzed	QC Batch ID
S-2-1	**15-08-1559-3-A**	**08/20/15 07:45**	**Solid**	**GC 46**	**08/24/15**	**08/25/15 17:19**	**150824B06**

Parameter	Result	RL	DF	Qualifiers
TPH as Motor Oil	86	25	1.00	HD

Surrogate	Rec. (%)	Control Limits	Qualifiers
n-Octacosane	69	61-145	

Client Sample Number	Lab Sample Number	Date/Time Collected	Matrix	Instrument	Date Prepared	Date/Time Analyzed	QC Batch ID
S-2-10	**15-08-1559-4-A**	**08/20/15 08:13**	**Solid**	**GC 46**	**08/24/15**	**08/25/15 13:52**	**150824B06**

Parameter	Result	RL	DF	Qualifiers
TPH as Motor Oil	ND	25	1.00	

Surrogate	Rec. (%)	Control Limits	Qualifiers
n-Octacosane	86	61-145	

Client Sample Number	Lab Sample Number	Date/Time Collected	Matrix	Instrument	Date Prepared	Date/Time Analyzed	QC Batch ID
S-3-1.5	**15-08-1559-5-A**	**08/20/15 08:43**	**Solid**	**GC 46**	**08/24/15**	**08/25/15 17:37**	**150824B06**

Parameter	Result	RL	DF	Qualifiers
TPH as Motor Oil	160	25	1.00	HD

Surrogate	Rec. (%)	Control Limits	Qualifiers
n-Octacosane	99	61-145	

RL: Reporting Limit. DF: Dilution Factor. MDL: Method Detection Limit.

Return to Contents

eurofins | Calscience

Analytical Report

Geosyntec Consultants		Date Received:	08/21/15
2100 Main Street, Suite 150		Work Order:	15-08-1559
Huntington Beach, CA 92648-2460		Preparation:	EPA 3550B
		Method:	EPA 8015B (M)
		Units:	mg/kg
Project: PSG / HR1507-02			Page 2 of 3

Client Sample Number	Lab Sample Number	Date/Time Collected	Matrix	Instrument	Date Prepared	Date/Time Analyzed	QC Batch ID
S-3-9	**15-08-1559-6-A**	**08/20/15 09:57**	**Solid**	**GC 46**	**08/24/15**	**08/25/15 14:09**	**150824B06**

Parameter	Result	RL	DF	Qualifiers
TPH as Motor Oil	ND	25	1.00	

Surrogate	Rec. (%)	Control Limits	Qualifiers
n-Octacosane	100	61-145	

S-4-1	**15-08-1559-7-A**	**08/20/15 10:42**	**Solid**	**GC 46**	**08/24/15**	**08/26/15 17:38**	**150824B06**

Parameter	Result	RL	DF	Qualifiers
TPH as Motor Oil	ND	25	1.00	

Surrogate	Rec. (%)	Control Limits	Qualifiers
n-Octacosane	102	61-145	

S-4-9	**15-08-1559-8-A**	**08/20/15 22:54**	**Solid**	**GC 46**	**08/24/15**	**08/25/15 14:44**	**150824B06**

Parameter	Result	RL	DF	Qualifiers
TPH as Motor Oil	ND	25	1.00	

Surrogate	Rec. (%)	Control Limits	Qualifiers
n-Octacosane	104	61-145	

S-5-1	**15-08-1559-9-A**	**08/20/15 14:43**	**Solid**	**GC 46**	**08/24/15**	**08/25/15 15:01**	**150824B06**

Parameter	Result	RL	DF	Qualifiers
TPH as Motor Oil	ND	25	1.00	

Surrogate	Rec. (%)	Control Limits	Qualifiers
n-Octacosane	103	61-145	

S-5-10.5	**15-08-1559-10-A**	**08/20/15 13:02**	**Solid**	**GC 46**	**08/24/15**	**08/25/15 15:19**	**150824B06**

Parameter	Result	RL	DF	Qualifiers
TPH as Motor Oil	ND	25	1.00	

Surrogate	Rec. (%)	Control Limits	Qualifiers
n-Octacosane	97	61-145	

RL: Reporting Limit. DF: Dilution Factor. MDL: Method Detection Limit.

Return to Contents

eurofins | Calscience

Analytical Report

Geosyntec Consultants		Date Received:	08/21/15
2100 Main Street, Suite 150		Work Order:	15-08-1559
Huntington Beach, CA 92648-2460		Preparation:	EPA 3550B
		Method:	EPA 8015B (M)
		Units:	mg/kg
Project: PSG / HR1507-02			Page 3 of 3

Client Sample Number	Lab Sample Number	Date/Time Collected	Matrix	Instrument	Date Prepared	Date/Time Analyzed	QC Batch ID
S-6-1	**15-08-1559-11-A**	**08/20/15 12:09**	**Solid**	**GC 46**	**08/24/15**	**08/25/15 17:03**	**150824B06**

Parameter	Result	RL	DF	Qualifiers
TPH as Motor Oil	ND	25	1.00	

Surrogate	Rec. (%)	Control Limits	Qualifiers
n-Octacosane	91	61-145	

S-6-9	**15-08-1559-12-A**	**08/20/15 12:25**	**Solid**	**GC 46**	**08/24/15**	**08/25/15 15:37**	**150824B06**

Parameter	Result	RL	DF	Qualifiers
TPH as Motor Oil	ND	25	1.00	

Surrogate	Rec. (%)	Control Limits	Qualifiers
n-Octacosane	94	61-145	

SV-7-1	**15-08-1559-13-A**	**08/20/15 11:22**	**Solid**	**GC 46**	**08/24/15**	**08/25/15 15:54**	**150824B06**

Parameter	Result	RL	DF	Qualifiers
TPH as Motor Oil	ND	25	1.00	

Surrogate	Rec. (%)	Control Limits	Qualifiers
n-Octacosane	87	61-145	

SV-7-10	**15-08-1559-14-A**	**08/20/15 11:40**	**Solid**	**GC 46**	**08/24/15**	**08/25/15 16:11**	**150824B06**

Parameter	Result	RL	DF	Qualifiers
TPH as Motor Oil	ND	25	1.00	

Surrogate	Rec. (%)	Control Limits	Qualifiers
n-Octacosane	83	61-145	

Method Blank	**099-15-420-1479**	**N/A**	**Solid**	**GC 46**	**08/24/15**	**08/24/15 17:57**	**150824B06**

Parameter	Result	RL	DF	Qualifiers
TPH as Motor Oil	ND	25	1.00	

Surrogate	Rec. (%)	Control Limits	Qualifiers
n-Octacosane	90	61-145	

RL: Reporting Limit. DF: Dilution Factor. MDL: Method Detection Limit.

Return to Contents

eurofins | Calscience

Analytical Report

Geosyntec Consultants		Date Received:	08/21/15
2100 Main Street, Suite 150		Work Order:	15-08-1559
Huntington Beach, CA 92648-2460		Preparation:	EPA 3550B
		Method:	EPA 8015B (M)
		Units:	mg/kg
Project: PSG / HR1507-02			Page 1 of 3

Client Sample Number	Lab Sample Number	Date/Time Collected	Matrix	Instrument	Date Prepared	Date/Time Analyzed	QC Batch ID
SV-1-1	**15-08-1559-1-A**	**08/20/15 09:32**	**Solid**	**GC 46**	**08/24/15**	**08/25/15 17:55**	**150824B05**

Parameter	Result	RL	DF	Qualifiers
TPH as Diesel	25	5.1	1.00	HD

Surrogate	Rec. (%)	Control Limits	Qualifiers
n-Octacosane	114	61-145	

Client Sample Number	Lab Sample Number	Date/Time Collected	Matrix	Instrument	Date Prepared	Date/Time Analyzed	QC Batch ID
SV-1-9	**15-08-1559-2-A**	**08/20/15 09:55**	**Solid**	**GC 46**	**08/24/15**	**08/25/15 13:34**	**150824B05**

Parameter	Result	RL	DF	Qualifiers
TPH as Diesel	ND	5.1	1.00	

Surrogate	Rec. (%)	Control Limits	Qualifiers
n-Octacosane	99	61-145	

Client Sample Number	Lab Sample Number	Date/Time Collected	Matrix	Instrument	Date Prepared	Date/Time Analyzed	QC Batch ID
S-2-1	**15-08-1559-3-A**	**08/20/15 07:45**	**Solid**	**GC 46**	**08/24/15**	**08/25/15 17:19**	**150824B05**

Parameter	Result	RL	DF	Qualifiers
TPH as Diesel	21	4.9	1.00	HD

Surrogate	Rec. (%)	Control Limits	Qualifiers
n-Octacosane	69	61-145	

Client Sample Number	Lab Sample Number	Date/Time Collected	Matrix	Instrument	Date Prepared	Date/Time Analyzed	QC Batch ID
S-2-10	**15-08-1559-4-A**	**08/20/15 08:13**	**Solid**	**GC 46**	**08/24/15**	**08/25/15 13:52**	**150824B05**

Parameter	Result	RL	DF	Qualifiers
TPH as Diesel	ND	5.0	1.00	

Surrogate	Rec. (%)	Control Limits	Qualifiers
n-Octacosane	86	61-145	

Client Sample Number	Lab Sample Number	Date/Time Collected	Matrix	Instrument	Date Prepared	Date/Time Analyzed	QC Batch ID
S-3-1.5	**15-08-1559-5-A**	**08/20/15 08:43**	**Solid**	**GC 46**	**08/24/15**	**08/25/15 17:37**	**150824B05**

Parameter	Result	RL	DF	Qualifiers
TPH as Diesel	19	4.9	1.00	HD

Surrogate	Rec. (%)	Control Limits	Qualifiers
n-Octacosane	99	61-145	

RL: Reporting Limit. DF: Dilution Factor. MDL: Method Detection Limit.

Return to Contents

eurofins | Calscience

Analytical Report

Geosyntec Consultants		Date Received:	08/21/15
2100 Main Street, Suite 150		Work Order:	15-08-1559
Huntington Beach, CA 92648-2460		Preparation:	EPA 3550B
		Method:	EPA 8015B (M)
		Units:	mg/kg
Project: PSG / HR1507-02			Page 2 of 3

Client Sample Number	Lab Sample Number	Date/Time Collected	Matrix	Instrument	Date Prepared	Date/Time Analyzed	QC Batch ID
S-3-9	**15-08-1559-6-A**	**08/20/15 09:57**	**Solid**	**GC 46**	**08/24/15**	**08/25/15 14:09**	**150824B05**

Parameter	Result	RL	DF	Qualifiers
TPH as Diesel	ND	4.9	1.00	

Surrogate	Rec. (%)	Control Limits	Qualifiers
n-Octacosane	100	61-145	

S-4-1	**15-08-1559-7-A**	**08/20/15 10:42**	**Solid**	**GC 46**	**08/24/15**	**08/26/15 17:38**	**150824B05**

Parameter	Result	RL	DF	Qualifiers
TPH as Diesel	ND	5.0	1.00	

Surrogate	Rec. (%)	Control Limits	Qualifiers
n-Octacosane	102	61-145	

S-4-9	**15-08-1559-8-A**	**08/20/15 22:54**	**Solid**	**GC 46**	**08/24/15**	**08/25/15 14:44**	**150824B05**

Parameter	Result	RL	DF	Qualifiers
TPH as Diesel	ND	4.9	1.00	

Surrogate	Rec. (%)	Control Limits	Qualifiers
n-Octacosane	104	61-145	

S-5-1	**15-08-1559-9-A**	**08/20/15 14:43**	**Solid**	**GC 46**	**08/24/15**	**08/25/15 15:01**	**150824B05**

Parameter	Result	RL	DF	Qualifiers
TPH as Diesel	ND	4.9	1.00	

Surrogate	Rec. (%)	Control Limits	Qualifiers
n-Octacosane	103	61-145	

S-5-10.5	**15-08-1559-10-A**	**08/20/15 13:02**	**Solid**	**GC 46**	**08/24/15**	**08/25/15 15:19**	**150824B05**

Parameter	Result	RL	DF	Qualifiers
TPH as Diesel	ND	5.0	1.00	

Surrogate	Rec. (%)	Control Limits	Qualifiers
n-Octacosane	97	61-145	

RL: Reporting Limit. DF: Dilution Factor. MDL: Method Detection Limit.

Return to Contents

eurofins | Calscience

Analytical Report

Geosyntec Consultants		Date Received:	08/21/15
2100 Main Street, Suite 150		Work Order:	15-08-1559
Huntington Beach, CA 92648-2460		Preparation:	EPA 3550B
		Method:	EPA 8015B (M)
		Units:	mg/kg
Project: PSG / HR1507-02			Page 3 of 3

Client Sample Number	Lab Sample Number	Date/Time Collected	Matrix	Instrument	Date Prepared	Date/Time Analyzed	QC Batch ID
S-6-1	**15-08-1559-11-A**	**08/20/15 12:09**	**Solid**	**GC 46**	**08/24/15**	**08/25/15 17:03**	**150824B05**

Parameter	Result	RL	DF	Qualifiers
TPH as Diesel	ND	5.0	1.00	

Surrogate	Rec. (%)	Control Limits	Qualifiers
n-Octacosane	91	61-145	

S-6-9	**15-08-1559-12-A**	**08/20/15 12:25**	**Solid**	**GC 46**	**08/24/15**	**08/25/15 15:37**	**150824B05**

Parameter	Result	RL	DF	Qualifiers
TPH as Diesel	ND	5.0	1.00	

Surrogate	Rec. (%)	Control Limits	Qualifiers
n-Octacosane	94	61-145	

SV-7-1	**15-08-1559-13-A**	**08/20/15 11:22**	**Solid**	**GC 46**	**08/24/15**	**08/25/15 15:54**	**150824B05**

Parameter	Result	RL	DF	Qualifiers
TPH as Diesel	ND	5.0	1.00	

Surrogate	Rec. (%)	Control Limits	Qualifiers
n-Octacosane	87	61-145	

SV-7-10	**15-08-1559-14-A**	**08/20/15 11:40**	**Solid**	**GC 46**	**08/24/15**	**08/25/15 16:11**	**150824B05**

Parameter	Result	RL	DF	Qualifiers
TPH as Diesel	ND	5.1	1.00	

Surrogate	Rec. (%)	Control Limits	Qualifiers
n-Octacosane	83	61-145	

Method Blank	**099-15-422-1997**	**N/A**	**Solid**	**GC 46**	**08/24/15**	**08/24/15 17:57**	**150824B05**

Parameter	Result	RL	DF	Qualifiers
TPH as Diesel	ND	5.0	1.00	

Surrogate	Rec. (%)	Control Limits	Qualifiers
n-Octacosane	90	61-145	

RL: Reporting Limit. DF: Dilution Factor. MDL: Method Detection Limit.

Return to Contents

eurofins | Calscience

Analytical Report

Geosyntec Consultants		Date Received:	08/21/15
2100 Main Street, Suite 150		Work Order:	15-08-1559
Huntington Beach, CA 92648-2460		Preparation:	EPA 5035
		Method:	EPA 8015B (M)
		Units:	mg/kg
Project: PSG / HR1507-02			Page 1 of 4

Client Sample Number	Lab Sample Number	Date/Time Collected	Matrix	Instrument	Date Prepared	Date/Time Analyzed	QC Batch ID
SV-1-1	**15-08-1559-1-D**	**08/20/15 09:32**	**Solid**	**GC 24**	**08/20/15**	**08/25/15 14:26**	**150825L029**

Parameter	Result	RL	DF	Qualifiers
TPH as Gasoline	ND	0.38	1.00	

Surrogate	Rec. (%)	Control Limits	Qualifiers
1,4-Bromofluorobenzene	76	60-126	

SV-1-9	**15-08-1559-2-E**	**08/20/15 09:55**	**Solid**	**GC 24**	**08/20/15**	**08/26/15 14:46**	**150826L044**

Parameter	Result	RL	DF	Qualifiers
TPH as Gasoline	ND	0.31	1.00	

Surrogate	Rec. (%)	Control Limits	Qualifiers
1,4-Bromofluorobenzene	74	60-126	

S-2-1	**15-08-1559-3-D**	**08/20/15 07:45**	**Solid**	**GC 24**	**08/20/15**	**08/25/15 15:00**	**150825L029**

Parameter	Result	RL	DF	Qualifiers
TPH as Gasoline	ND	0.26	1.00	

Surrogate	Rec. (%)	Control Limits	Qualifiers
1,4-Bromofluorobenzene	73	60-126	

S-2-10	**15-08-1559-4-D**	**08/20/15 08:13**	**Solid**	**GC 24**	**08/20/15**	**08/25/15 21:13**	**150825L029**

Parameter	Result	RL	DF	Qualifiers
TPH as Gasoline	ND	0.26	1.00	

Surrogate	Rec. (%)	Control Limits	Qualifiers
1,4-Bromofluorobenzene	70	60-126	

S-3-1.5	**15-08-1559-5-D**	**08/20/15 08:43**	**Solid**	**GC 24**	**08/20/15**	**08/25/15 15:34**	**150825L029**

Parameter	Result	RL	DF	Qualifiers
TPH as Gasoline	ND	0.32	1.00	

Surrogate	Rec. (%)	Control Limits	Qualifiers
1,4-Bromofluorobenzene	74	60-126	

RL: Reporting Limit. DF: Dilution Factor. MDL: Method Detection Limit.

Return to Contents

eurofins | Calscience

Analytical Report

Geosyntec Consultants		Date Received:	08/21/15
2100 Main Street, Suite 150		Work Order:	15-08-1559
Huntington Beach, CA 92648-2460		Preparation:	EPA 5035
		Method:	EPA 8015B (M)
		Units:	mg/kg
Project: PSG / HR1507-02			Page 2 of 4

Client Sample Number	Lab Sample Number	Date/Time Collected	Matrix	Instrument	Date Prepared	Date/Time Analyzed	QC Batch ID
S-3-9	**15-08-1559-6-D**	**08/20/15 09:57**	**Solid**	**GC 24**	**08/20/15**	**08/25/15 16:08**	**150825L029**

Parameter	Result	RL	DF	Qualifiers
TPH as Gasoline	ND	0.19	1.00	

Surrogate	Rec. (%)	Control Limits	Qualifiers
1,4-Bromofluorobenzene	74	60-126	

Client Sample Number	Lab Sample Number	Date/Time Collected	Matrix	Instrument	Date Prepared	Date/Time Analyzed	QC Batch ID
S-4-1	**15-08-1559-7-D**	**08/20/15 10:42**	**Solid**	**GC 24**	**08/20/15**	**08/25/15 16:42**	**150825L029**

Parameter	Result	RL	DF	Qualifiers
TPH as Gasoline	ND	0.26	1.00	

Surrogate	Rec. (%)	Control Limits	Qualifiers
1,4-Bromofluorobenzene	71	60-126	

Client Sample Number	Lab Sample Number	Date/Time Collected	Matrix	Instrument	Date Prepared	Date/Time Analyzed	QC Batch ID
S-4-9	**15-08-1559-8-E**	**08/20/15 22:54**	**Solid**	**GC 24**	**08/20/15**	**08/25/15 23:29**	**150825L029**

Parameter	Result	RL	DF	Qualifiers
TPH as Gasoline	ND	0.34	1.00	

Surrogate	Rec. (%)	Control Limits	Qualifiers
1,4-Bromofluorobenzene	71	60-126	

Client Sample Number	Lab Sample Number	Date/Time Collected	Matrix	Instrument	Date Prepared	Date/Time Analyzed	QC Batch ID
S-5-1	**15-08-1559-9-D**	**08/20/15 14:43**	**Solid**	**GC 24**	**08/20/15**	**08/25/15 17:50**	**150825L029**

Parameter	Result	RL	DF	Qualifiers
TPH as Gasoline	ND	0.27	1.00	

Surrogate	Rec. (%)	Control Limits	Qualifiers
1,4-Bromofluorobenzene	68	60-126	

Client Sample Number	Lab Sample Number	Date/Time Collected	Matrix	Instrument	Date Prepared	Date/Time Analyzed	QC Batch ID
S-5-10.5	**15-08-1559-10-D**	**08/20/15 13:02**	**Solid**	**GC 24**	**08/20/15**	**08/25/15 18:23**	**150825L029**

Parameter	Result	RL	DF	Qualifiers
TPH as Gasoline	ND	0.25	1.00	

Surrogate	Rec. (%)	Control Limits	Qualifiers
1,4-Bromofluorobenzene	73	60-126	

RL: Reporting Limit. DF: Dilution Factor. MDL: Method Detection Limit.

Return to Contents

eurofins | Calscience

Analytical Report

Geosyntec Consultants		Date Received:	08/21/15
2100 Main Street, Suite 150		Work Order:	15-08-1559
Huntington Beach, CA 92648-2460		Preparation:	EPA 5035
		Method:	EPA 8015B (M)
		Units:	mg/kg
Project: PSG / HR1507-02			Page 3 of 4

Client Sample Number	Lab Sample Number	Date/Time Collected	Matrix	Instrument	Date Prepared	Date/Time Analyzed	QC Batch ID
S-6-1	**15-08-1559-11-D**	**08/20/15 12:09**	**Solid**	**GC 24**	**08/20/15**	**08/25/15 20:06**	**150825L029**

Parameter	Result	RL	DF	Qualifiers
TPH as Gasoline	ND	0.33	1.00	

Surrogate	Rec. (%)	Control Limits	Qualifiers
1,4-Bromofluorobenzene	64	60-126	

Client Sample Number	Lab Sample Number	Date/Time Collected	Matrix	Instrument	Date Prepared	Date/Time Analyzed	QC Batch ID
S-6-9	**15-08-1559-12-D**	**08/20/15 12:25**	**Solid**	**GC 24**	**08/20/15**	**08/25/15 21:47**	**150825L029**

Parameter	Result	RL	DF	Qualifiers
TPH as Gasoline	ND	0.24	1.00	

Surrogate	Rec. (%)	Control Limits	Qualifiers
1,4-Bromofluorobenzene	76	60-126	

Client Sample Number	Lab Sample Number	Date/Time Collected	Matrix	Instrument	Date Prepared	Date/Time Analyzed	QC Batch ID
SV-7-1	**15-08-1559-13-D**	**08/20/15 11:22**	**Solid**	**GC 24**	**08/20/15**	**08/25/15 22:21**	**150825L029**

Parameter	Result	RL	DF	Qualifiers
TPH as Gasoline	ND	0.25	1.00	

Surrogate	Rec. (%)	Control Limits	Qualifiers
1,4-Bromofluorobenzene	76	60-126	

Client Sample Number	Lab Sample Number	Date/Time Collected	Matrix	Instrument	Date Prepared	Date/Time Analyzed	QC Batch ID
SV-7-10	**15-08-1559-14-D**	**08/20/15 11:40**	**Solid**	**GC 24**	**08/20/15**	**08/25/15 22:55**	**150825L029**

Parameter	Result	RL	DF	Qualifiers
TPH as Gasoline	ND	0.26	1.00	

Surrogate	Rec. (%)	Control Limits	Qualifiers
1,4-Bromofluorobenzene	71	60-126	

Client Sample Number	Lab Sample Number	Date/Time Collected	Matrix	Instrument	Date Prepared	Date/Time Analyzed	QC Batch ID
Method Blank	**099-12-285-5577**	**N/A**	**Solid**	**GC 24**	**08/25/15**	**08/25/15 12:10**	**150825L029**

Parameter	Result	RL	DF	Qualifiers
TPH as Gasoline	ND	0.25	1.00	

Surrogate	Rec. (%)	Control Limits	Qualifiers
1,4-Bromofluorobenzene	76	60-126	

RL: Reporting Limit. DF: Dilution Factor. MDL: Method Detection Limit.

Return to Contents

eurofins | Calscience

Analytical Report

Geosyntec Consultants		Date Received:	08/21/15
2100 Main Street, Suite 150		Work Order:	15-08-1559
Huntington Beach, CA 92648-2460		Preparation:	EPA 5035
		Method:	EPA 8015B (M)
		Units:	mg/kg
Project: PSG / HR1507-02			Page 4 of 4

Client Sample Number	Lab Sample Number	Date/Time Collected	Matrix	Instrument	Date Prepared	Date/Time Analyzed	QC Batch ID
Method Blank	**099-12-285-5578**	**N/A**	**Solid**	**GC 24**	**08/26/15**	**08/26/15 12:30**	**150826L044**

Parameter	Result	RL	DF	Qualifiers
TPH as Gasoline	ND	0.25	1.00	

Surrogate	Rec. (%)	Control Limits	Qualifiers
1,4-Bromofluorobenzene	69	60-126	

Return to Contents

RL: Reporting Limit. DF: Dilution Factor. MDL: Method Detection Limit.

eurofins | Calscience

Analytical Report

Geosyntec Consultants		Date Received:	08/21/15
2100 Main Street, Suite 150		Work Order:	15-08-1559
Huntington Beach, CA 92648-2460		Preparation:	EPA 3050B
		Method:	EPA 6010B
		Units:	mg/kg
Project: PSG / HR1507-02			Page 1 of 15

Client Sample Number	Lab Sample Number	Date/Time Collected	Matrix	Instrument	Date Prepared	Date/Time Analyzed	QC Batch ID
SV-1-1	**15-08-1559-1-A**	**08/20/15 09:32**	**Solid**	**ICP 7300**	**08/24/15**	**08/25/15 12:38**	**150824L03**

Parameter	Result	RL	DF	Qualifiers
Antimony	ND	0.718	0.957	
Arsenic	ND	0.718	0.957	
Barium	212	0.478	0.957	
Beryllium	0.352	0.239	0.957	
Cadmium	1.69	0.478	0.957	
Chromium	22.7	0.239	0.957	
Cobalt	17.8	0.239	0.957	
Copper	28.1	0.478	0.957	
Lead	53.6	0.478	0.957	
Molybdenum	ND	0.239	0.957	
Nickel	20.1	0.239	0.957	
Selenium	ND	0.718	0.957	
Silver	ND	0.239	0.957	
Thallium	ND	0.718	0.957	
Vanadium	48.6	0.239	0.957	
Zinc	97.2	0.957	0.957	

Return to Contents

RL: Reporting Limit. DF: Dilution Factor. MDL: Method Detection Limit.

eurofins | Calscience

Analytical Report

Geosyntec Consultants		Date Received:	08/21/15
2100 Main Street, Suite 150		Work Order:	15-08-1559
Huntington Beach, CA 92648-2460		Preparation:	EPA 3050B
		Method:	EPA 6010B
		Units:	mg/kg
Project: PSG / HR1507-02			Page 2 of 15

Client Sample Number	Lab Sample Number	Date/Time Collected	Matrix	Instrument	Date Prepared	Date/Time Analyzed	QC Batch ID
SV-1-9	**15-08-1559-2-A**	**08/20/15 09:55**	**Solid**	**ICP 7300**	**08/24/15**	**08/25/15 12:46**	**150824L03**

Parameter	Result	RL	DF	Qualifiers
Antimony	ND	0.725	0.966	
Arsenic	ND	0.725	0.966	
Barium	105	0.483	0.966	
Beryllium	ND	0.242	0.966	
Cadmium	0.732	0.483	0.966	
Chromium	7.23	0.242	0.966	
Cobalt	8.45	0.242	0.966	
Copper	11.8	0.483	0.966	
Lead	0.518	0.483	0.966	
Molybdenum	ND	0.242	0.966	
Nickel	5.62	0.242	0.966	
Selenium	ND	0.725	0.966	
Silver	ND	0.242	0.966	
Thallium	ND	0.725	0.966	
Vanadium	15.5	0.242	0.966	
Zinc	26.9	0.966	0.966	

Return to Contents

RL: Reporting Limit. DF: Dilution Factor. MDL: Method Detection Limit.

eurofins | Calscience

Analytical Report

Geosyntec Consultants		Date Received:	08/21/15
2100 Main Street, Suite 150		Work Order:	15-08-1559
Huntington Beach, CA 92648-2460		Preparation:	EPA 3050B
		Method:	EPA 6010B
		Units:	mg/kg
Project: PSG / HR1507-02			Page 3 of 15

Client Sample Number	Lab Sample Number	Date/Time Collected	Matrix	Instrument	Date Prepared	Date/Time Analyzed	QC Batch ID
S-2-1	**15-08-1559-3-A**	**08/20/15 07:45**	**Solid**	**ICP 7300**	**08/24/15**	**08/25/15 12:48**	**150824L03**

Parameter	Result	RL	DF	Qualifiers
Antimony	ND	0.754	1.01	
Arsenic	ND	0.754	1.01	
Barium	312	0.503	1.01	
Beryllium	ND	0.251	1.01	
Cadmium	1.69	0.503	1.01	
Chromium	10.5	0.251	1.01	
Cobalt	8.88	0.251	1.01	
Copper	27.8	0.503	1.01	
Lead	117	0.503	1.01	
Molybdenum	ND	0.251	1.01	
Nickel	14.9	0.251	1.01	
Selenium	ND	0.754	1.01	
Silver	ND	0.251	1.01	
Thallium	ND	0.754	1.01	
Vanadium	23.5	0.251	1.01	
Zinc	232	1.01	1.01	

Return to Contents

RL: Reporting Limit. DF: Dilution Factor. MDL: Method Detection Limit.

eurofins | Calscience

Analytical Report

Geosyntec Consultants		Date Received:	08/21/15
2100 Main Street, Suite 150		Work Order:	15-08-1559
Huntington Beach, CA 92648-2460		Preparation:	EPA 3050B
		Method:	EPA 6010B
		Units:	mg/kg
Project: PSG / HR1507-02			Page 4 of 15

Client Sample Number	Lab Sample Number	Date/Time Collected	Matrix	Instrument	Date Prepared	Date/Time Analyzed	QC Batch ID
S-2-10	**15-08-1559-4-A**	**08/20/15 08:13**	**Solid**	**ICP 7300**	**08/24/15**	**08/25/15 12:49**	**150824L03**

Parameter	Result	RL	DF	Qualifiers
Antimony	ND	0.735	0.980	
Arsenic	ND	0.735	0.980	
Barium	71.7	0.490	0.980	
Beryllium	ND	0.245	0.980	
Cadmium	0.655	0.490	0.980	
Chromium	9.31	0.245	0.980	
Cobalt	6.22	0.245	0.980	
Copper	9.94	0.490	0.980	
Lead	0.663	0.490	0.980	
Molybdenum	1.86	0.245	0.980	
Nickel	3.95	0.245	0.980	
Selenium	ND	0.735	0.980	
Silver	ND	0.245	0.980	
Thallium	ND	0.735	0.980	
Vanadium	11.9	0.245	0.980	
Zinc	19.8	0.980	0.980	

Return to Contents

RL: Reporting Limit. DF: Dilution Factor. MDL: Method Detection Limit.

eurofins | Calscience

Analytical Report

Geosyntec Consultants		Date Received:	08/21/15
2100 Main Street, Suite 150		Work Order:	15-08-1559
Huntington Beach, CA 92648-2460		Preparation:	EPA 3050B
		Method:	EPA 6010B
		Units:	mg/kg
Project: PSG / HR1507-02			Page 5 of 15

Client Sample Number	Lab Sample Number	Date/Time Collected	Matrix	Instrument	Date Prepared	Date/Time Analyzed	QC Batch ID
S-3-1.5	**15-08-1559-5-A**	**08/20/15 08:43**	**Solid**	**ICP 7300**	**08/24/15**	**08/25/15 12:51**	**150824L03**

Parameter	Result	RL	DF	Qualifiers
Antimony	ND	0.739	0.985	
Arsenic	0.896	0.739	0.985	
Barium	306	0.493	0.985	
Beryllium	ND	0.246	0.985	
Cadmium	2.84	0.493	0.985	
Chromium	11.6	0.246	0.985	
Cobalt	13.6	0.246	0.985	
Copper	108	0.493	0.985	
Lead	515	0.493	0.985	
Molybdenum	ND	0.246	0.985	
Nickel	13.4	0.246	0.985	
Selenium	ND	0.739	0.985	
Silver	ND	0.246	0.985	
Thallium	ND	0.739	0.985	
Vanadium	14.4	0.246	0.985	
Zinc	383	0.985	0.985	

Return to Contents

RL: Reporting Limit. DF: Dilution Factor. MDL: Method Detection Limit.

eurofins | Calscience

Analytical Report

Geosyntec Consultants		Date Received:	08/21/15
2100 Main Street, Suite 150		Work Order:	15-08-1559
Huntington Beach, CA 92648-2460		Preparation:	EPA 3050B
		Method:	EPA 6010B
		Units:	mg/kg
Project: PSG / HR1507-02			Page 6 of 15

Client Sample Number	Lab Sample Number	Date/Time Collected	Matrix	Instrument	Date Prepared	Date/Time Analyzed	QC Batch ID
S-3-9	**15-08-1559-6-A**	**08/20/15 09:57**	**Solid**	**ICP 7300**	**08/24/15**	**08/25/15 12:53**	**150824L03**

Parameter	Result	RL	DF	Qualifiers
Antimony	ND	0.750	1.00	
Arsenic	ND	0.750	1.00	
Barium	147	0.500	1.00	
Beryllium	ND	0.250	1.00	
Cadmium	1.01	0.500	1.00	
Chromium	14.7	0.250	1.00	
Cobalt	11.4	0.250	1.00	
Copper	14.7	0.500	1.00	
Lead	4.18	0.500	1.00	
Molybdenum	ND	0.250	1.00	
Nickel	10.2	0.250	1.00	
Selenium	ND	0.750	1.00	
Silver	ND	0.250	1.00	
Thallium	ND	0.750	1.00	
Vanadium	24.3	0.250	1.00	
Zinc	43.8	1.00	1.00	

Return to Contents

RL: Reporting Limit. DF: Dilution Factor. MDL: Method Detection Limit.

eurofins | Calscience

Analytical Report

Geosyntec Consultants		Date Received:	08/21/15
2100 Main Street, Suite 150		Work Order:	15-08-1559
Huntington Beach, CA 92648-2460		Preparation:	EPA 3050B
		Method:	EPA 6010B
		Units:	mg/kg
Project: PSG / HR1507-02			Page 7 of 15

Client Sample Number	Lab Sample Number	Date/Time Collected	Matrix	Instrument	Date Prepared	Date/Time Analyzed	QC Batch ID
S-4-1	**15-08-1559-7-A**	**08/20/15 10:42**	**Solid**	**ICP 7300**	**08/24/15**	**08/25/15 12:54**	**150824L03**

Parameter	Result	RL	DF	Qualifiers
Antimony	ND	0.769	1.03	
Arsenic	1.35	0.769	1.03	
Barium	134	0.513	1.03	
Beryllium	ND	0.256	1.03	
Cadmium	1.01	0.513	1.03	
Chromium	12.3	0.256	1.03	
Cobalt	11.3	0.256	1.03	
Copper	20.0	0.513	1.03	
Lead	7.42	0.513	1.03	
Molybdenum	ND	0.256	1.03	
Nickel	9.72	0.256	1.03	
Selenium	ND	0.769	1.03	
Silver	ND	0.256	1.03	
Thallium	ND	0.769	1.03	
Vanadium	25.1	0.256	1.03	
Zinc	49.6	1.03	1.03	

Return to Contents

RL: Reporting Limit. DF: Dilution Factor. MDL: Method Detection Limit.

eurofins | Calscience

Analytical Report

Geosyntec Consultants		Date Received:	08/21/15
2100 Main Street, Suite 150		Work Order:	15-08-1559
Huntington Beach, CA 92648-2460		Preparation:	EPA 3050B
		Method:	EPA 6010B
		Units:	mg/kg
Project: PSG / HR1507-02			Page 8 of 15

Client Sample Number	Lab Sample Number	Date/Time Collected	Matrix	Instrument	Date Prepared	Date/Time Analyzed	QC Batch ID
S-4-9	**15-08-1559-8-A**	**08/20/15 22:54**	**Solid**	**ICP 7300**	**08/24/15**	**08/25/15 12:56**	**150824L03**

Parameter	Result	RL	DF	Qualifiers
Antimony	ND	0.761	1.02	
Arsenic	ND	0.761	1.02	
Barium	86.4	0.508	1.02	
Beryllium	ND	0.254	1.02	
Cadmium	0.719	0.508	1.02	
Chromium	6.36	0.254	1.02	
Cobalt	7.39	0.254	1.02	
Copper	11.0	0.508	1.02	
Lead	0.681	0.508	1.02	
Molybdenum	ND	0.254	1.02	
Nickel	4.67	0.254	1.02	
Selenium	ND	0.761	1.02	
Silver	ND	0.254	1.02	
Thallium	ND	0.761	1.02	
Vanadium	13.2	0.254	1.02	
Zinc	22.6	1.02	1.02	

Return to Contents

RL: Reporting Limit. DF: Dilution Factor. MDL: Method Detection Limit.

eurofins | Calscience

Analytical Report

Geosyntec Consultants		Date Received:	08/21/15
2100 Main Street, Suite 150		Work Order:	15-08-1559
Huntington Beach, CA 92648-2460		Preparation:	EPA 3050B
		Method:	EPA 6010B
		Units:	mg/kg
Project: PSG / HR1507-02			Page 9 of 15

Client Sample Number	Lab Sample Number	Date/Time Collected	Matrix	Instrument	Date Prepared	Date/Time Analyzed	QC Batch ID
S-5-1	**15-08-1559-9-A**	**08/20/15 14:43**	**Solid**	**ICP 7300**	**08/24/15**	**08/25/15 12:57**	**150824L03**

Parameter	Result	RL	DF	Qualifiers
Antimony	ND	0.750	1.00	
Arsenic	ND	0.750	1.00	
Barium	128	0.500	1.00	
Beryllium	ND	0.250	1.00	
Cadmium	0.903	0.500	1.00	
Chromium	11.4	0.250	1.00	
Cobalt	10.6	0.250	1.00	
Copper	16.5	0.500	1.00	
Lead	2.25	0.500	1.00	
Molybdenum	ND	0.250	1.00	
Nickel	8.65	0.250	1.00	
Selenium	ND	0.750	1.00	
Silver	ND	0.250	1.00	
Thallium	ND	0.750	1.00	
Vanadium	19.1	0.250	1.00	
Zinc	39.2	1.00	1.00	

Return to Contents

RL: Reporting Limit. DF: Dilution Factor. MDL: Method Detection Limit.

eurofins | Calscience

Analytical Report

Geosyntec Consultants		Date Received:	08/21/15
2100 Main Street, Suite 150		Work Order:	15-08-1559
Huntington Beach, CA 92648-2460		Preparation:	EPA 3050B
		Method:	EPA 6010B
		Units:	mg/kg
Project: PSG / HR1507-02			Page 10 of 15

Client Sample Number	Lab Sample Number	Date/Time Collected	Matrix	Instrument	Date Prepared	Date/Time Analyzed	QC Batch ID
S-5-10.5	**15-08-1559-10-A**	**08/20/15 13:02**	**Solid**	**ICP 7300**	**08/24/15**	**08/25/15 12:59**	**150824L03**

Parameter	Result	RL	DF	Qualifiers
Antimony	ND	0.761	1.02	
Arsenic	ND	0.761	1.02	
Barium	123	0.508	1.02	
Beryllium	ND	0.254	1.02	
Cadmium	0.855	0.508	1.02	
Chromium	11.0	0.254	1.02	
Cobalt	9.86	0.254	1.02	
Copper	40.7	0.508	1.02	
Lead	20.7	0.508	1.02	
Molybdenum	0.715	0.254	1.02	
Nickel	10.9	0.254	1.02	
Selenium	ND	0.761	1.02	
Silver	ND	0.254	1.02	
Thallium	ND	0.761	1.02	
Vanadium	26.2	0.254	1.02	
Zinc	37.3	1.02	1.02	

Return to Contents

RL: Reporting Limit. DF: Dilution Factor. MDL: Method Detection Limit.

eurofins | Calscience

Analytical Report

Geosyntec Consultants		Date Received:	08/21/15
2100 Main Street, Suite 150		Work Order:	15-08-1559
Huntington Beach, CA 92648-2460		Preparation:	EPA 3050B
		Method:	EPA 6010B
		Units:	mg/kg
Project: PSG / HR1507-02			Page 11 of 15

Client Sample Number	Lab Sample Number	Date/Time Collected	Matrix	Instrument	Date Prepared	Date/Time Analyzed	QC Batch ID
S-6-1	**15-08-1559-11-A**	**08/20/15 12:09**	**Solid**	**ICP 7300**	**08/24/15**	**08/25/15 13:01**	**150824L03**

Parameter	Result	RL	DF	Qualifiers
Antimony	ND	0.781	1.04	
Arsenic	ND	0.781	1.04	
Barium	242	0.521	1.04	
Beryllium	0.434	0.260	1.04	
Cadmium	1.81	0.521	1.04	
Chromium	26.2	0.260	1.04	
Cobalt	20.4	0.260	1.04	
Copper	37.7	0.521	1.04	
Lead	66.6	0.521	1.04	
Molybdenum	ND	0.260	1.04	
Nickel	20.3	0.260	1.04	
Selenium	ND	0.781	1.04	
Silver	ND	0.260	1.04	
Thallium	ND	0.781	1.04	
Vanadium	50.1	0.260	1.04	
Zinc	104	1.04	1.04	

Return to Contents

RL: Reporting Limit. DF: Dilution Factor. MDL: Method Detection Limit.

eurofins | Calscience

Analytical Report

Geosyntec Consultants		Date Received:	08/21/15
2100 Main Street, Suite 150		Work Order:	15-08-1559
Huntington Beach, CA 92648-2460		Preparation:	EPA 3050B
		Method:	EPA 6010B
		Units:	mg/kg
Project: PSG / HR1507-02			Page 12 of 15

Client Sample Number	Lab Sample Number	Date/Time Collected	Matrix	Instrument	Date Prepared	Date/Time Analyzed	QC Batch ID
S-6-9	**15-08-1559-12-A**	**08/20/15 12:25**	**Solid**	**ICP 7300**	**08/24/15**	**08/25/15 13:07**	**150824L03**

Parameter	Result	RL	DF	Qualifiers
Antimony	ND	0.773	1.03	
Arsenic	ND	0.773	1.03	
Barium	91.7	0.515	1.03	
Beryllium	ND	0.258	1.03	
Cadmium	0.673	0.515	1.03	
Chromium	5.66	0.258	1.03	
Cobalt	7.56	0.258	1.03	
Copper	10.8	0.515	1.03	
Lead	0.897	0.515	1.03	
Molybdenum	ND	0.258	1.03	
Nickel	4.30	0.258	1.03	
Selenium	ND	0.773	1.03	
Silver	ND	0.258	1.03	
Thallium	ND	0.773	1.03	
Vanadium	13.2	0.258	1.03	
Zinc	24.1	1.03	1.03	

Return to Contents

RL: Reporting Limit. DF: Dilution Factor. MDL: Method Detection Limit.

eurofins | Calscience

Analytical Report

Geosyntec Consultants		Date Received:	08/21/15
2100 Main Street, Suite 150		Work Order:	15-08-1559
Huntington Beach, CA 92648-2460		Preparation:	EPA 3050B
		Method:	EPA 6010B
		Units:	mg/kg
Project: PSG / HR1507-02			Page 13 of 15

Client Sample Number	Lab Sample Number	Date/Time Collected	Matrix	Instrument	Date Prepared	Date/Time Analyzed	QC Batch ID
SV-7-1	**15-08-1559-13-A**	**08/20/15 11:22**	**Solid**	**ICP 7300**	**08/24/15**	**08/25/15 13:09**	**150824L03**

Parameter	Result	RL	DF	Qualifiers
Antimony	ND	0.728	0.971	
Arsenic	ND	0.728	0.971	
Barium	180	0.485	0.971	
Beryllium	ND	0.243	0.971	
Cadmium	1.02	0.485	0.971	
Chromium	11.1	0.243	0.971	
Cobalt	11.7	0.243	0.971	
Copper	18.9	0.485	0.971	
Lead	3.49	0.485	0.971	
Molybdenum	ND	0.243	0.971	
Nickel	8.51	0.243	0.971	
Selenium	ND	0.728	0.971	
Silver	ND	0.243	0.971	
Thallium	ND	0.728	0.971	
Vanadium	22.2	0.243	0.971	
Zinc	44.1	0.971	0.971	

Return to Contents

RL: Reporting Limit. DF: Dilution Factor. MDL: Method Detection Limit.

eurofins | Calscience

Analytical Report

Geosyntec Consultants		Date Received:	08/21/15
2100 Main Street, Suite 150		Work Order:	15-08-1559
Huntington Beach, CA 92648-2460		Preparation:	EPA 3050B
		Method:	EPA 6010B
		Units:	mg/kg
Project: PSG / HR1507-02			Page 14 of 15

Client Sample Number	Lab Sample Number	Date/Time Collected	Matrix	Instrument	Date Prepared	Date/Time Analyzed	QC Batch ID
SV-7-10	**15-08-1559-14-A**	**08/20/15 11:40**	**Solid**	**ICP 7300**	**08/24/15**	**08/25/15 13:10**	**150824L03**

Parameter	Result	RL	DF	Qualifiers
Antimony	ND	0.735	0.980	
Arsenic	ND	0.735	0.980	
Barium	223	0.490	0.980	
Beryllium	0.349	0.245	0.980	
Cadmium	1.39	0.490	0.980	
Chromium	17.1	0.245	0.980	
Cobalt	16.2	0.245	0.980	
Copper	19.8	0.490	0.980	
Lead	1.73	0.490	0.980	
Molybdenum	ND	0.245	0.980	
Nickel	12.5	0.245	0.980	
Selenium	ND	0.735	0.980	
Silver	ND	0.245	0.980	
Thallium	ND	0.735	0.980	
Vanadium	30.9	0.245	0.980	
Zinc	46.2	0.980	0.980	

Return to Contents

RL: Reporting Limit. DF: Dilution Factor. MDL: Method Detection Limit.

eurofins | Calscience

Analytical Report

Geosyntec Consultants		Date Received:	08/21/15
2100 Main Street, Suite 150		Work Order:	15-08-1559
Huntington Beach, CA 92648-2460		Preparation:	EPA 3050B
		Method:	EPA 6010B
		Units:	mg/kg
Project: PSG / HR1507-02			Page 15 of 15

Client Sample Number	Lab Sample Number	Date/Time Collected	Matrix	Instrument	Date Prepared	Date/Time Analyzed	QC Batch ID
Method Blank	**097-01-002-21662**	**N/A**	**Solid**	**ICP 7300**	**08/24/15**	**08/25/15 12:27**	**150824L03**

Parameter	Result	RL	DF	Qualifiers
Antimony	ND	0.761	1.02	
Arsenic	ND	0.761	1.02	
Barium	ND	0.508	1.02	
Beryllium	ND	0.254	1.02	
Cadmium	ND	0.508	1.02	
Chromium	ND	0.254	1.02	
Cobalt	ND	0.254	1.02	
Copper	ND	0.508	1.02	
Lead	ND	0.508	1.02	
Molybdenum	ND	0.254	1.02	
Nickel	ND	0.254	1.02	
Selenium	ND	0.761	1.02	
Silver	ND	0.254	1.02	
Thallium	ND	0.761	1.02	
Vanadium	ND	0.254	1.02	
Zinc	ND	1.02	1.02	

Return to Contents

RL: Reporting Limit. DF: Dilution Factor. MDL: Method Detection Limit.

eurofins | Calscience

Analytical Report

Geosyntec Consultants		Date Received:	08/21/15
2100 Main Street, Suite 150		Work Order:	15-08-1559
Huntington Beach, CA 92648-2460		Preparation:	EPA 7471A Total
		Method:	EPA 7471A
		Units:	mg/kg
Project: PSG / HR1507-02			Page 1 of 2

Client Sample Number	Lab Sample Number	Date/Time Collected	Matrix	Instrument	Date Prepared	Date/Time Analyzed	QC Batch ID
SV-1-1	**15-08-1559-1-A**	**08/20/15 09:32**	**Solid**	**Mercury 05**	**08/27/15**	**08/27/15 14:37**	**150827L01**

Parameter	Result	RL	DF	Qualifiers
Mercury	ND	0.0847	1.00	

SV-1-9	**15-08-1559-2-A**	**08/20/15 09:55**	**Solid**	**Mercury 05**	**08/27/15**	**08/27/15 14:44**	**150827L01**

Parameter	Result	RL	DF	Qualifiers
Mercury	ND	0.0833	1.00	

S-2-1	**15-08-1559-3-A**	**08/20/15 07:45**	**Solid**	**Mercury 05**	**08/27/15**	**08/27/15 14:46**	**150827L01**

Parameter	Result	RL	DF	Qualifiers
Mercury	ND	0.0833	1.00	

S-2-10	**15-08-1559-4-A**	**08/20/15 08:13**	**Solid**	**Mercury 05**	**08/27/15**	**08/27/15 14:48**	**150827L01**

Parameter	Result	RL	DF	Qualifiers
Mercury	ND	0.0877	1.00	

S-3-1.5	**15-08-1559-5-A**	**08/20/15 08:43**	**Solid**	**Mercury 05**	**08/27/15**	**08/27/15 14:50**	**150827L01**

Parameter	Result	RL	DF	Qualifiers
Mercury	ND	0.0862	1.00	

S-3-9	**15-08-1559-6-A**	**08/20/15 09:57**	**Solid**	**Mercury 05**	**08/27/15**	**08/27/15 14:53**	**150827L01**

Parameter	Result	RL	DF	Qualifiers
Mercury	ND	0.0833	1.00	

S-4-1	**15-08-1559-7-A**	**08/20/15 10:42**	**Solid**	**Mercury 05**	**08/27/15**	**08/27/15 15:00**	**150827L01**

Parameter	Result	RL	DF	Qualifiers
Mercury	ND	0.0806	1.00	

S-4-9	**15-08-1559-8-A**	**08/20/15 22:54**	**Solid**	**Mercury 05**	**08/27/15**	**08/27/15 15:02**	**150827L01**

Parameter	Result	RL	DF	Qualifiers
Mercury	ND	0.0862	1.00	

RL: Reporting Limit. DF: Dilution Factor. MDL: Method Detection Limit.

Return to Contents

eurofins | Calscience

Analytical Report

Geosyntec Consultants		Date Received:	08/21/15
2100 Main Street, Suite 150		Work Order:	15-08-1559
Huntington Beach, CA 92648-2460		Preparation:	EPA 7471A Total
		Method:	EPA 7471A
		Units:	mg/kg
Project: PSG / HR1507-02			Page 2 of 2

Client Sample Number	Lab Sample Number	Date/Time Collected	Matrix	Instrument	Date Prepared	Date/Time Analyzed	QC Batch ID
S-5-1	**15-08-1559-9-A**	**08/20/15 14:43**	**Solid**	**Mercury 05**	**08/27/15**	**08/27/15 15:04**	**150827L01**

Parameter	Result	RL	DF	Qualifiers
Mercury	ND	0.0847	1.00	

S-5-10.5	**15-08-1559-10-A**	**08/20/15 13:02**	**Solid**	**Mercury 05**	**08/27/15**	**08/27/15 15:07**	**150827L01**

Parameter	Result	RL	DF	Qualifiers
Mercury	ND	0.0833	1.00	

S-6-1	**15-08-1559-11-A**	**08/20/15 12:09**	**Solid**	**Mercury 05**	**08/27/15**	**08/27/15 15:10**	**150827L01**

Parameter	Result	RL	DF	Qualifiers
Mercury	ND	0.0833	1.00	

S-6-9	**15-08-1559-12-A**	**08/20/15 12:25**	**Solid**	**Mercury 05**	**08/27/15**	**08/27/15 15:12**	**150827L01**

Parameter	Result	RL	DF	Qualifiers
Mercury	ND	0.0847	1.00	

SV-7-1	**15-08-1559-13-A**	**08/20/15 11:22**	**Solid**	**Mercury 05**	**08/27/15**	**08/27/15 15:14**	**150827L01**

Parameter	Result	RL	DF	Qualifiers
Mercury	ND	0.0794	1.00	

SV-7-10	**15-08-1559-14-A**	**08/20/15 11:40**	**Solid**	**Mercury 05**	**08/27/15**	**08/27/15 15:16**	**150827L01**

Parameter	Result	RL	DF	Qualifiers
Mercury	ND	0.0877	1.00	

Method Blank	**099-16-272-1561**	**N/A**	**Solid**	**Mercury 05**	**08/27/15**	**08/27/15 14:33**	**150827L01**

Parameter	Result	RL	DF	Qualifiers
Mercury	ND	0.0833	1.00	

Return to Contents

RL: Reporting Limit. DF: Dilution Factor. MDL: Method Detection Limit.

eurofins | Calscience

Quality Control - Spike/Spike Duplicate

Geosyntec Consultants		Date Received:	08/21/15
2100 Main Street, Suite 150		Work Order:	15-08-1559
Huntington Beach, CA 92648-2460		Preparation:	EPA 3550B
		Method:	EPA 8015B (M)
Project: PSG / HR1507-02			Page 1 of 4

Quality Control Sample ID	Type	Matrix	Instrument	Date Prepared	Date Analyzed	MS/MSD Batch Number
15-08-1092-10	**Sample**	**Solid**	**GC 46**	**08/24/15**	**08/24/15 20:19**	**150824S06**
15-08-1092-10	**Matrix Spike**	**Solid**	**GC 46**	**08/24/15**	**08/24/15 19:26**	**150824S06**
15-08-1092-10	**Matrix Spike Duplicate**	**Solid**	**GC 46**	**08/24/15**	**08/24/15 19:44**	**150824S06**

Parameter	Sample Conc.	Spike Added	MS Conc.	MS %Rec.	MSD Conc.	MSD %Rec.	%Rec. CL	RPD	RPD CL	Qualifiers
TPH as Motor Oil	ND	400.0	321.4	80	331.0	83	64-130	3	0-15	

RPD: Relative Percent Difference. CL: Control Limits

Return to Contents

eurofins | Calscience

Quality Control - Spike/Spike Duplicate

Geosyntec Consultants		Date Received:	08/21/15
2100 Main Street, Suite 150		Work Order:	15-08-1559
Huntington Beach, CA 92648-2460		Preparation:	EPA 3550B
		Method:	EPA 8015B (M)
Project: PSG / HR1507-02			Page 2 of 4

Quality Control Sample ID	Type	Matrix	Instrument	Date Prepared	Date Analyzed	MS/MSD Batch Number
15-08-1092-10	**Sample**	**Solid**	**GC 46**	**08/24/15**	**08/24/15 20:19**	**150824S05**
15-08-1092-10	**Matrix Spike**	**Solid**	**GC 46**	**08/24/15**	**08/24/15 18:51**	**150824S05**
15-08-1092-10	**Matrix Spike Duplicate**	**Solid**	**GC 46**	**08/24/15**	**08/24/15 19:08**	**150824S05**

Parameter	Sample Conc.	Spike Added	MS Conc.	MS %Rec.	MSD Conc.	MSD %Rec.	%Rec. CL	RPD	RPD CL	Qualifiers
TPH as Diesel	ND	400.0	386.7	97	411.7	103	64-130	6	0-15	

RPD: Relative Percent Difference. CL: Control Limits

Return to Contents

eurofins | Calscience

Quality Control - Spike/Spike Duplicate

Geosyntec Consultants		Date Received:	08/21/15
2100 Main Street, Suite 150		Work Order:	15-08-1559
Huntington Beach, CA 92648-2460		Preparation:	EPA 3050B
		Method:	EPA 6010B
Project: PSG / HR1507-02			Page 3 of 4

Quality Control Sample ID	Type	Matrix	Instrument	Date Prepared	Date Analyzed	MS/MSD Batch Number
SV-1-1	**Sample**	**Solid**	**ICP 7300**	**08/24/15**	**08/25/15 12:38**	**150824S03**
SV-1-1	**Matrix Spike**	**Solid**	**ICP 7300**	**08/24/15**	**08/25/15 12:39**	**150824S03**
SV-1-1	**Matrix Spike Duplicate**	**Solid**	**ICP 7300**	**08/24/15**	**08/25/15 12:41**	**150824S03**

Parameter	Sample Conc.	Spike Added	MS Conc.	MS %Rec.	MSD Conc.	MSD %Rec.	%Rec. CL	RPD	RPD CL	Qualifiers
Antimony	ND	25.00	6.347	25	4.759	19	50-115	29	0-20	3,4
Arsenic	ND	25.00	26.54	106	23.69	95	75-125	11	0-20	
Barium	212.4	25.00	243.2	4X	227.1	4X	75-125	4X	0-20	Q
Beryllium	0.3517	25.00	28.91	114	26.58	105	75-125	8	0-20	
Cadmium	1.685	25.00	29.27	110	27.00	101	75-125	8	0-20	
Chromium	22.66	25.00	49.75	108	46.43	95	75-125	7	0-20	
Cobalt	17.81	25.00	46.24	114	43.25	102	75-125	7	0-20	
Copper	28.13	25.00	58.99	123	55.58	110	75-125	6	0-20	
Lead	53.55	25.00	78.25	99	69.67	64	75-125	12	0-20	3
Molybdenum	ND	25.00	26.17	105	23.75	95	75-125	10	0-20	
Nickel	20.15	25.00	47.33	109	43.88	95	75-125	8	0-20	
Selenium	ND	25.00	20.88	84	17.96	72	75-125	15	0-20	3
Silver	ND	12.50	5.742	46	4.736	38	75-125	19	0-20	3
Thallium	ND	25.00	26.83	107	24.30	97	75-125	10	0-20	
Vanadium	48.64	25.00	74.87	105	68.55	80	75-125	9	0-20	
Zinc	97.20	25.00	125.1	112	114.8	70	75-125	9	0-20	3

Return to Contents

RPD: Relative Percent Difference. CL: Control Limits

eurofins | Calscience

Quality Control - Spike/Spike Duplicate

Geosyntec Consultants		Date Received:	08/21/15
2100 Main Street, Suite 150		Work Order:	15-08-1559
Huntington Beach, CA 92648-2460		Preparation:	EPA 7471A Total
		Method:	EPA 7471A
Project: PSG / HR1507-02			Page 4 of 4

Quality Control Sample ID	Type	Matrix	Instrument	Date Prepared	Date Analyzed	MS/MSD Batch Number
SV-1-1	**Sample**	**Solid**	**Mercury 05**	**08/27/15**	**08/27/15 14:37**	**150827S01**
SV-1-1	**Matrix Spike**	**Solid**	**Mercury 05**	**08/27/15**	**08/27/15 14:39**	**150827S01**
SV-1-1	**Matrix Spike Duplicate**	**Solid**	**Mercury 05**	**08/27/15**	**08/27/15 14:41**	**150827S01**

Parameter	Sample Conc.	Spike Added	MS Conc.	MS %Rec.	MSD Conc.	MSD %Rec.	%Rec. CL	RPD	RPD CL	Qualifiers
Mercury	ND	0.8350	0.7898	95	0.8205	98	71-137	4	0-14	

RPD: Relative Percent Difference. CL: Control Limits

Return to Contents

eurofins | Calscience

Quality Control - LCS

Geosyntec Consultants		Date Received:	08/21/15
2100 Main Street, Suite 150		Work Order:	15-08-1559
Huntington Beach, CA 92648-2460		Preparation:	EPA 3550B
		Method:	EPA 8015B (M)
Project: PSG / HR1507-02			Page 1 of 6

Quality Control Sample ID	Type	Matrix	Instrument	Date Prepared	Date Analyzed	LCS Batch Number
099-15-420-1479	**LCS**	**Solid**	**GC 46**	**08/24/15**	**08/24/15 18:33**	**150824B06**

Parameter	Spike Added	Conc. Recovered	LCS %Rec.	%Rec. CL	Qualifiers
TPH as Motor Oil	400.0	342.3	86	75-123	

RPD: Relative Percent Difference. CL: Control Limits

Return to Contents

eurofins | Calscience

Quality Control - LCS

Geosyntec Consultants		Date Received:	08/21/15
2100 Main Street, Suite 150		Work Order:	15-08-1559
Huntington Beach, CA 92648-2460		Preparation:	EPA 3550B
		Method:	EPA 8015B (M)
Project: PSG / HR1507-02			Page 2 of 6

Quality Control Sample ID	Type	Matrix	Instrument	Date Prepared	Date Analyzed	LCS Batch Number
099-15-422-1997	**LCS**	**Solid**	**GC 46**	**08/24/15**	**08/24/15 18:15**	**150824B05**

Parameter	Spike Added	Conc. Recovered	LCS %Rec.	%Rec. CL	Qualifiers
TPH as Diesel	400.0	402.9	101	75-123	

Return to Contents

RPD: Relative Percent Difference. CL: Control Limits

eurofins | Calscience

Quality Control - LCS/LCSD

Geosyntec Consultants		Date Received:	08/21/15
2100 Main Street, Suite 150		Work Order:	15-08-1559
Huntington Beach, CA 92648-2460		Preparation:	EPA 5035
		Method:	EPA 8015B (M)
Project: PSG / HR1507-02			Page 3 of 6

Quality Control Sample ID	Type	Matrix	Instrument	Date Prepared	Date Analyzed	LCS/LCSD Batch Number
099-12-285-5577	**LCS**	**Solid**	**GC 24**	**08/25/15**	**08/25/15 11:02**	**150825L029**
099-12-285-5577	**LCSD**	**Solid**	**GC 24**	**08/25/15**	**08/25/15 11:36**	**150825L029**

Parameter	Spike Added	LCS Conc.	LCS %Rec.	LCSD Conc.	LCSD %Rec.	%Rec. CL	RPD	RPD CL	Qualifiers
TPH as Gasoline	2.000	1.980	99	1.979	99	55-139	0	0-18	

RPD: Relative Percent Difference. CL: Control Limits

Return to Contents

eurofins | Calscience

Quality Control - LCS/LCSD

Geosyntec Consultants		Date Received:	08/21/15
2100 Main Street, Suite 150		Work Order:	15-08-1559
Huntington Beach, CA 92648-2460		Preparation:	EPA 5035
		Method:	EPA 8015B (M)
Project: PSG / HR1507-02			Page 4 of 6

Quality Control Sample ID	Type	Matrix	Instrument	Date Prepared	Date Analyzed	LCS/LCSD Batch Number
099-12-285-5578	**LCS**	**Solid**	**GC 24**	**08/26/15**	**08/26/15 11:23**	**150826L044**
099-12-285-5578	**LCSD**	**Solid**	**GC 24**	**08/26/15**	**08/26/15 11:56**	**150826L044**

Parameter	Spike Added	LCS Conc.	LCS %Rec.	LCSD Conc.	LCSD %Rec.	%Rec. CL	RPD	RPD CL	Qualifiers
TPH as Gasoline	2.000	1.997	100	2.000	100	55-139	0	0-18	

RPD: Relative Percent Difference. CL: Control Limits

Return to Contents

eurofins | Calscience

Quality Control - LCS

Geosyntec Consultants		Date Received:	08/21/15
2100 Main Street, Suite 150		Work Order:	15-08-1559
Huntington Beach, CA 92648-2460		Preparation:	EPA 3050B
		Method:	EPA 6010B
Project: PSG / HR1507-02			Page 5 of 6

Quality Control Sample ID	Type	Matrix	Instrument	Date Prepared	Date Analyzed	LCS Batch Number
097-01-002-21662	**LCS**	**Solid**	**ICP 7300**	**08/24/15**	**08/25/15 12:29**	**150824L03**

Parameter	Spike Added	Conc. Recovered	LCS %Rec.	%Rec. CL	ME CL	Qualifiers
Antimony	25.00	24.27	97	80-120	73-127	
Arsenic	25.00	23.13	93	80-120	73-127	
Barium	25.00	24.74	99	80-120	73-127	
Beryllium	25.00	23.36	93	80-120	73-127	
Cadmium	25.00	24.97	100	80-120	73-127	
Chromium	25.00	24.74	99	80-120	73-127	
Cobalt	25.00	25.89	104	80-120	73-127	
Copper	25.00	26.08	104	80-120	73-127	
Lead	25.00	24.22	97	80-120	73-127	
Molybdenum	25.00	23.43	94	80-120	73-127	
Nickel	25.00	24.76	99	80-120	73-127	
Selenium	25.00	23.71	95	80-120	73-127	
Silver	12.50	11.82	95	80-120	73-127	
Thallium	25.00	24.74	99	80-120	73-127	
Vanadium	25.00	24.04	96	80-120	73-127	
Zinc	25.00	26.11	104	80-120	73-127	

Total number of LCS compounds: 16
Total number of ME compounds: 0
Total number of ME compounds allowed: 1
LCS ME CL validation result: Pass

Return to Contents

RPD: Relative Percent Difference. CL: Control Limits

eurofins | Calscience

Quality Control - LCS

Geosyntec Consultants		Date Received:	08/21/15
2100 Main Street, Suite 150		Work Order:	15-08-1559
Huntington Beach, CA 92648-2460		Preparation:	EPA 7471A Total
		Method:	EPA 7471A
Project: PSG / HR1507-02			Page 6 of 6

Quality Control Sample ID	Type	Matrix	Instrument	Date Prepared	Date Analyzed	LCS Batch Number
099-16-272-1561	**LCS**	**Solid**	**Mercury 05**	**08/27/15**	**08/27/15 14:35**	**150827L01**

Parameter	Spike Added	Conc. Recovered	LCS %Rec.	%Rec. CL	Qualifiers
Mercury	0.8350	0.8706	104	85-121	

Return to Contents

RPD: Relative Percent Difference. CL: Control Limits

eurofins | Calscience

Sample Analysis Summary Report

Work Order: 15-08-1559

Method	Extraction	Chemist ID	Instrument	Analytical Location
EPA 6010B	EPA 3050B	935	ICP 7300	1
EPA 7471A	EPA 7471A Total	915	Mercury 05	1
EPA 8015B (M)	EPA 5035	715	GC 24	2
EPA 8015B (M)	EPA 3550B	974	GC 46	1

Return to Contents

eurofins | Calscience

Glossary of Terms and Qualifiers

Work Order: 15-08-1559 Page 1 of 1

Qualifiers	Definition
*	See applicable analysis comment.
<	Less than the indicated value.
>	Greater than the indicated value.
1	Surrogate compound recovery was out of control due to a required sample dilution. Therefore, the sample data was reported without further clarification.
2	Surrogate compound recovery was out of control due to matrix interference. The associated method blank surrogate spike compound was in control and, therefore, the sample data was reported without further clarification.
3	Recovery of the Matrix Spike (MS) or Matrix Spike Duplicate (MSD) compound was out of control due to suspected matrix interference. The associated LCS recovery was in control.
4	The MS/MSD RPD was out of control due to suspected matrix interference.
5	The PDS/PDSD or PES/PESD associated with this batch of samples was out of control due to suspected matrix interference.
6	Surrogate recovery below the acceptance limit.
7	Surrogate recovery above the acceptance limit.
B	Analyte was present in the associated method blank.
BU	Sample analyzed after holding time expired.
BV	Sample received after holding time expired.
CI	See case narrative.
E	Concentration exceeds the calibration range.
ET	Sample was extracted past end of recommended max. holding time.
HD	The chromatographic pattern was inconsistent with the profile of the reference fuel standard.
HDH	The sample chromatographic pattern for TPH matches the chromatographic pattern of the specified standard but heavier hydrocarbons were also present (or detected).
HDL	The sample chromatographic pattern for TPH matches the chromatographic pattern of the specified standard but lighter hydrocarbons were also present (or detected).
J	Analyte was detected at a concentration below the reporting limit and above the laboratory method detection limit. Reported value is estimated.
JA	Analyte positively identified but quantitation is an estimate.
ME	LCS Recovery Percentage is within Marginal Exceedance (ME) Control Limit range (+/- 4 SD from the mean).
ND	Parameter not detected at the indicated reporting limit.
Q	Spike recovery and RPD control limits do not apply resulting from the parameter concentration in the sample exceeding the spike concentration by a factor of four or greater.
SG	The sample extract was subjected to Silica Gel treatment prior to analysis.
X	% Recovery and/or RPD out-of-range.
Z	Analyte presence was not confirmed by second column or GC/MS analysis.

Solid - Unless otherwise indicated, solid sample data is reported on a wet weight basis, not corrected for % moisture. All QC results are reported on a wet weight basis.

Any parameter identified in 40CFR Part 136.3 Table II that is designated as "analyze immediately" with a holding time of <= 15 minutes (40CFR-136.3 Table II, footnote 4), is considered a "field" test and the reported results will be qualified as being received outside of the stated holding time unless received at the laboratory within 15 minutes of the collection time.

A calculated total result (Example: Total Pesticides) is the summation of each component concentration and/or, if "J" flags are reported, estimated concentration. Component concentrations showing not detected (ND) are summed into the calculated total result as zero concentrations.

Return to Contents

eurofins | Calscience

7440 Lincoln Way, Garden Grove, CA 92841-1427 • (714) 895-5494
For courier service / sample drop off information, contact us26_sales@eurofinsus.com or call us.

CHAIN-OF-CUSTODY RECORD

DATE: 08/20/2015
PAGE: 1 OF 3

WO NO. / LAB USE ONLY: 15-08-1559

LABORATORY CLIENT: GEOSYNTEC CONSULTANTS
ADDRESS: 2100 MAIN ST #150
CITY: HUNTINGTON BEACH STATE: CA ZIP: 92648
TEL: 714 969-0800 E-MAIL: ZAMINI@GEOSYNTEC.COM

CLIENT PROJECT NAME / NO.: PSG HR1507-02
P.O. NO.:
PROJECT CONTACT: ZAHRA AMINI
LAB CONTACT OR QUOTE NO.:
GLOBAL ID:
LOG CODE:
SAMPLER(S): (PRINT) VIVEK MANICKAM

TURNAROUND TIME (Rush surcharges may apply to any TAT not "STANDARD"):
☐ SAME DAY ☐ 24 HR ☐ 48 HR ☐ 72 HR ☐ 5 DAYS ☑ STANDARD

EDD:
☐ COELT EDF ☐ OTHER

SPECIAL INSTRUCTIONS:
* SEE "HOLD" NOTE ON SELECT SAMPLE IDS - THESE ARE TO BE ANALYZED FOR METALS PENDING PRIMARY ANALYSES.

REQUESTED ANALYSES
Please check box or fill in blank as needed.

LAB USE ONLY	SAMPLE ID	SAMPLING DATE	SAMPLING TIME	MATRIX	NO. OF CONT.	Unpreserved	Preserved (5035)	Field Filtered	☑ TPH(g) ☑ GRO	☑ TPH(d) ☐ DRO / 8020	TPH ☐ C6-C36 ☐ C6-C44	TPH ____	BTEX / MTBE ☐ 8260 ☐ ____	VOCs (8260)	Oxygenates (8260)	Prep (5035) ☐ En Core ☑ Terra Core	SVOCs (8270)	Pesticides (8081)	PCBs (8082)	PAHs ☐ 8270 ☐ 8270 SIM	T22 Metals ☑ 6010/747X ☐ 6020/747X *	Cr(VI) ☐ 7196 ☐ 7199 ☐ 218.6		* NOTE: SUFFICIENT SAMPLE HAS BEEN COLLECTED TO RUN SOLUBLE - IF WE REQUEST IT. THX.
1	SV-1-1	8/20/15	9:32A	Soil	5	2	3		X	X						X					X			
2	SV-1-9	"	9:55A	"	"	"	"		X	X						X					X			
3	S-2-1	"	7:45A	"	"	"	"		X	X						X					X			
4	S-2-10	"	8:13A	"	"	"	"		X	X						X					X			
5	S-3-1.5	"	8:43A	"	"	"	"		X	X						X					X			
6	S-3-9	"	9:57A	"	"	"	"		X	X						X					X			
7	S-4-1	"	10:42A	"	"	"	"		X	X						X					X			
8	S-4-9	"	10:57P	"	"	"	"		X	X						X					X			
9	S-5-1	"	2:43P	"	"	"	"		X	X						X					X			
10	S-5-10.5	"	1:[illegible]0	"	"	"	"		X	X						X					X			

Relinquished by: (Signature)	Received by: (Signature/Affiliation)	Date:	Time:
VIVEK MANICKAM	EEZ	8/21/15	1327
	EEZ	8/21/15	1410

2014-07-01 Revision

Return to Contents

Calscience Environmental Laboratories, Inc.

CHAIN OF CUSTODY RECORD

☑ SoCal Laboratory
7440 Lincoln Way
Garden Grove, CA 92841-1427
(714) 895-5494

☐ NorCal Service Center
5063 Commercial Circle, Suite H
Concord, CA 94520-8577
(925) 689-9022

WO # / LAB USE ONLY: 0 8 - 1 5 5 9

Date: 8/20/2015

Page 2 of 3

LABORATORY CLIENT: GEOSYNTEC CONSULTANTS

ADDRESS: SEE PAGE 1 OF 3

CITY | STATE | ZIP

TEL: | E-MAIL:

CLIENT PROJECT NAME / NUMBER:

P.O. NO.:

PROJECT CONTACT: ZAHRA AMINI

SAMPLER(S): (PRINT)

TURNAROUND TIME:
☐ SAME DAY ☐ 24 HR ☐ 48 HR ☐ 72 HR ☑ STANDARD

☐ COELT EDF | GLOBAL ID | LOG CODE

SPECIAL INSTRUCTIONS:

REQUESTED ANALYSES

LAB USE ONLY	SAMPLE ID	SAMPLING DATE	SAMPLING TIME	MATRIX	NO. OF CONT.	Unpreserved	Preserved	Field Filtered	TPH (g) or GRO	TPH (d) or DRO or (C6-C36) or (C6-C44)	TPH ( )	BTEX / MTBE (8260) or ( )	VOCs (8260)	Oxygenates (8260)	En Core / Terra Core Prep (5035)	SVOCs (8270)	Pesticides (8081)	PCBs (8082)	PNAs (8310) or (8270)	T22 Metals (6010/747X) *	Cr(VI) [7196 or 7199 or 218.6]	Air - VOCs (TO-14A) or (TO-15)	Air - TPH (g) [TO-3]	* SEE NOTE PAGE 1	
11	S-6-1	8/20/15	12:09p	SOIL	5	2	3		X	X					X					X				*	
12	S-6-9	8/20/15	12:25p	"	5	"	"		X	X					X					X					
13	SV-7-1	8/20/15	11:22A	"	5	"	"		X	X					X					X					
14	SV-7-10	8/20/15	11:40A	"	5	"	"		X	X					X					X					
15	SV-1-3	"	9:45A	"	1	✓																			
16	SV-1-7	"	9:50A	"	1	✓																			
17	S-2-3	"	7:50A	"	1	✓																			
18	S-2-7	"	8:05A	"	1	✓																			
19	S-3-3	"	8:50A	"	1	✓																			

ON HOLD

Relinquished by: (Signature)	Received by: (Signature/Affiliation)	Date:	Time:
VIVEK MANICKAM	CEL	8/21/15	1335
	CEL	8/21/15	1410

DISTRIBUTION: White with final report, Green and Yellow to Client.
Please note that pages 1 and 2 of 2 of our T/Cs are printed on the reverse side of the Green and Yellow copies respectively.

06/01/10 Revision

Return to Contents

Calscience Environmental Laboratories, Inc.

7440 Lincoln Way, Garden Grove, CA 92841-1427 • (714) 895-5494
Other locations: Concord, San Luis Obispo, Houston, and Corpus Christi
For courier service / sample drop off information,
contact sales@calscience.com or call us.

CHAIN OF CUSTODY RECORD

WO # / LAB USE ONLY: 15-08-1559

Date: 8/20/15

Page 3 of 3

LABORATORY CLIENT: GEOSYNTEC CONSULTANTS

ADDRESS: SEE PAGE 1

CITY: STATE: ZIP:

TEL: E-MAIL:

CLIENT PROJECT NAME / NUMBER:

P.O. NO.:

PROJECT CONTACT: ZAHRA AMINI

SAMPLER(S): (PRINT)

TURNAROUND TIME (Rush surcharges may apply to any TAT not "STANDARD"):
☐ SAME DAY ☐ 24 HR ☐ 48 HR ☐ 72 HR ☐ 5 DAYS ☑ STANDARD

☐ COELT EDF GLOBAL ID LOG CODE

SPECIAL INSTRUCTIONS:

REQUESTED ANALYSES

Please check box or fill in blank as needed.

LAB USE ONLY	SAMPLE ID	SAMPLING DATE	SAMPLING TIME	MATRIX	NO. OF CONT.	Unpreserved	Preserved	Field Filtered	☐ TPH(g) ☐ GRO	☐ TPH(d) ☐ DRO	TPH ☐ C6-C36 ☐ C6-C44	TPH ___	BTEX / MTBE ☐ 8260 ☐ ___	VOCs (8260)	Oxygenates (8260)	Prep (5035) ☐ En Core ☐ Terra Core	SVOCs (8270)	Pesticides (8081)	PCBs (8082)	PAHs ☐ 8270 ☐ 8270 SIM	T22 Metals ☐ 6010/747X ☐ 6020/747X	Cr(VI) ☐ 7196 ☐ 7199 ☐ 218.6	* SEE NOTE PAGE 1			
20	S-3-7	8/20/15	8:54A	SOIL	1	✓																				
21	S-4-3	"	10:53A	"	1	✓																				
22	S-4-7	"	10:54A	"	1	✓																				
23	S-5-3	"	12:40P	"	1	✓																				
24	S-5-7	"	12:50P	"	1	✓																				
25	S-6-3	"	12:22P	"	1	✓																				
26	S-6-7	"	12:26P	"	1	✓																				
27	SV-7-3	"	11:33A	"	1	✓																				
28	SV-7-7	"	11:35A	"	1	✓																				

ON HOLD

Relinquished by: (Signature)	Received by: (Signature/Affiliation)	Date:	Time:
VIVEK MANICKAM	ECL	8/21/15	1327
	ECL	8/21/15	1410

DISTRIBUTION: White with final report, Green and Yellow to Client.
Please note that pages 1 and 2 of 2 of our T/Cs are printed on the reverse side of the Green and Yellow copies, respectively.

01/01/14 Revision

Return to Contents

eurofins | Calscience

WORK ORDER NUMBER: 15-08- 1559

SAMPLE RECEIPT CHECKLIST

COOLER 1 OF 2

CLIENT: GEOSYNTEC

DATE: 08 / 21 / 2015

TEMPERATURE: (Criteria: 0.0°C – 6.0°C, not frozen except sediment/tissue)

Thermometer ID: SC5 (CF:-0.2°C); Temperature (w/o CF): 3.2 °C (w/ CF): 3.0 °C; ☑ Blank ☐ Sample

☐ Sample(s) outside temperature criteria (PM/APM contacted by: _____)

☐ Sample(s) outside temperature criteria but received on ice/chilled on same day of sampling

☐ Sample(s) received at ambient temperature; placed on ice for transport by courier

Ambient Temperature: ☐ Air ☐ Filter Checked by: 678

CUSTODY SEAL:

Cooler	☐ Present and Intact	☐ Present but Not Intact	☑ Not Present	☐ N/A	Checked by: 678
Sample(s)	☐ Present and Intact	☐ Present but Not Intact	☑ Not Present	☐ N/A	Checked by: 1017

SAMPLE CONDITION:

	Yes	No	N/A
Chain-of-Custody (COC) document(s) received with samples	☑	☐	☐
COC document(s) received complete	☑	☐	☐
☐ Sampling date ☐ Sampling time ☐ Matrix ☐ Number of containers			
☐ No analysis requested ☐ Not relinquished ☐ No relinquished date ☐ No relinquished time			
Sampler's name indicated on COC	☑	☐	☐
Sample container label(s) consistent with COC	☐	☑	☐
Sample container(s) intact and in good condition	☑	☐	☐
Proper containers for analyses requested	☑	☐	☐
Sufficient volume/mass for analyses requested	☑	☐	☐
Samples received within holding time	☑	☐	☐
Aqueous samples for certain analyses received within 15-minute holding time			
☐ pH ☐ Residual Chlorine ☐ Dissolved Sulfide ☐ Dissolved Oxygen	☐	☐	☑
Proper preservation chemical(s) noted on COC and/or sample container	☑	☐	☐
Unpreserved aqueous sample(s) received for certain analyses			
☐ Volatile Organics ☐ Total Metals ☐ Dissolved Metals			
Container(s) for certain analysis free of headspace	☐	☐	☑
☐ Volatile Organics ☐ Dissolved Gases (RSK-175) ☐ Dissolved Oxygen (SM 4500)			
☐ Carbon Dioxide (SM 4500) ☐ Ferrous Iron (SM 3500) ☐ Hydrogen Sulfide (Hach)			
Tedlar™ bag(s) free of condensation	☐	☐	☑

CONTAINER TYPE: (Trip Blank Lot Number: _____)

Aqueous: ☐ VOA ☐ VOA**h** ☐ VOA**na$_2$** ☐ 100PJ ☐ 100PJ**na$_2$** ☐ 125AGB ☐ 125AGB**h** ☐ 125AGB**p** ☐ 125PB

☐ 125PB**znna** ☐ 250AGB ☐ 250CGB ☐ 250CGB**s** ☐ 250PB ☐ 250PB**n** ☐ 500AGB ☐ 500AGJ ☐ 500AGJ**s**

☐ 500PB ☐ 1AGB ☐ 1AGB**na$_2$** ☐ 1AGB**s** ☐ 1PB ☐ 1PB**na** ☐ _____ ☐ _____ ☐ _____ ☐ _____

Solid: ☐ 4ozCGJ ☑ 8ozCGJ ☐ 16ozCGJ ☐ Sleeve (_____) ☐ EnCores® (_____) ☑ TerraCores® (3) ☑ 2oz PJ

Air: ☐ Tedlar™ ☐ Canister ☐ Sorbent Tube ☐ PUF ☐ _____ **Other Matrix** (_____): ☐ _____ ☐ _____

Container: **A** = Amber, **B** = Bottle, **C** = Clear, **E** = Envelope, **G** = Glass, **J** = Jar, **P** = Plastic, and **Z** = Ziploc/Resealable Bag

Preservative: **b** = buffered, **f** = filtered, **h** = HCl, **n** = HNO_3, **na** = NaOH, **na$_2$** = $Na_2S_2O_3$, **p** = H_3PO_4, **s** = H_2SO_4, **u** = ultra-pure, **znna** = $Zn(CH_3CO_2)_2$ + NaOH

Labeled/Checked by: 1017

Reviewed by: Sia

Return to Contents

eurofins | Calscience

WORK ORDER NUMBER: 15-08- 1559

SAMPLE RECEIPT CHECKLIST

COOLER 2 OF 2

CLIENT: Geosyntec

DATE: 08 / 21 / 2015

TEMPERATURE: (Criteria: 0.0°C – 6.0°C, not frozen except sediment/tissue)

Thermometer ID: SC5 (CF:-0.2°C); Temperature (w/o CF): 3.3 °C (w/ CF): 3.1 °C; ☐ Blank ☐ Sample

☐ Sample(s) outside temperature criteria (PM/APM contacted by: _____)

☐ Sample(s) outside temperature criteria but received on ice/chilled on same day of sampling

☐ Sample(s) received at ambient temperature; placed on ice for transport by courier

Ambient Temperature: ☐ Air ☐ Filter Checked by: 678

CUSTODY SEAL:

Cooler	☐ Present and Intact	☐ Present but Not Intact	☑ Not Present	☐ N/A	Checked by: 678
Sample(s)	☐ Present and Intact	☐ Present but Not Intact	☑ Not Present	☐ N/A	Checked by: 1017

SAMPLE CONDITION:

	Yes	No	N/A
Chain-of-Custody (COC) document(s) received with samples	☑	☐	☐
COC document(s) received complete	☑	☐	☐
☐ Sampling date ☐ Sampling time ☐ Matrix ☐ Number of containers			
☐ No analysis requested ☐ Not relinquished ☐ No relinquished date ☐ No relinquished time			
Sampler's name indicated on COC	☑	☐	☐
Sample container label(s) consistent with COC	☑	☐	☐
Sample container(s) intact and in good condition	☑	☐	☐
Proper containers for analyses requested	☑	☐	☐
Sufficient volume/mass for analyses requested	☑	☐	☐
Samples received within holding time	☑	☐	☐
Aqueous samples for certain analyses received within 15-minute holding time			
☐ pH ☐ Residual Chlorine ☐ Dissolved Sulfide ☐ Dissolved Oxygen	☐	☐	☑
Proper preservation chemical(s) noted on COC and/or sample container	☑	☐	☐
Unpreserved aqueous sample(s) received for certain analyses			
☐ Volatile Organics ☐ Total Metals ☐ Dissolved Metals			
Container(s) for certain analysis free of headspace	☐	☐	☑
☐ Volatile Organics ☐ Dissolved Gases (RSK-175) ☐ Dissolved Oxygen (SM 4500)			
☐ Carbon Dioxide (SM 4500) ☐ Ferrous Iron (SM 3500) ☐ Hydrogen Sulfide (Hach)			
Tedlar™ bag(s) free of condensation	☐	☐	☑

CONTAINER TYPE: (Trip Blank Lot Number: _____)

Aqueous: ☐ VOA ☐ VOA**h** ☐ VOA**na$_2$** ☐ 100PJ ☐ 100PJ**na$_2$** ☐ 125AGB ☐ 125AGB**h** ☐ 125AGB**p** ☐ 125PB

☐ 125PB**znna** ☐ 250AGB ☐ 250CGB ☐ 250CGB**s** ☐ 250PB ☐ 250PB**n** ☐ 500AGB ☐ 500AGJ ☐ 500AGJ**s**

☐ 500PB ☐ 1AGB ☐ 1AGB**na$_2$** ☐ 1AGB**s** ☐ 1PB ☐ 1PB**na** ☐ _____ ☐ _____ ☐ _____ ☐ _____

Solid: ☐ 4ozCGJ ☑ 8ozCGJ ☐ 16ozCGJ ☐ Sleeve (_____) ☐ EnCores® (_____) ☑ TerraCores® (3) ☑ 2ozPJ

Air: ☐ Tedlar™ ☐ Canister ☐ Sorbent Tube ☐ PUF ☐ _____ **Other Matrix** (_____): ☐ _____ ☐ _____

Container: **A** = Amber, **B** = Bottle, **C** = Clear, **E** = Envelope, **G** = Glass, **J** = Jar, **P** = Plastic, and **Z** = Ziploc/Resealable Bag

Preservative: **b** = buffered, **f** = filtered, **h** = HCl, **n** = HNO_3, **na** = NaOH, **na$_2$** = $Na_2S_2O_3$, **p** = H_3PO_4, Labeled/Checked by: 1017

s = H_2SO_4, **u** = ultra-pure, **znna** = $Zn(CH_3CO_2)_2$ + NaOH Reviewed by: [illegible]

Return to Contents

eurofins | Calscience

WORK ORDER NUMBER: 15-08- 1559

SAMPLE ANOMALY REPORT

DATE: 08 / 21 / 2015

SAMPLES, CONTAINERS, AND LABELS:

Comments

- ☐ Sample(s) NOT RECEIVED but listed on COC
- ☐ Sample(s) received but NOT LISTED on COC
- ☐ Holding time expired (list client or ECI sample ID and analysis)
- ☐ Insufficient sample amount for requested analysis (list analysis)
- ☐ Improper container(s) used (list analysis)
- ☐ Improper preservative used (list analysis)
- ☐ No preservative noted on COC or label (list analysis and notify lab)
- ☐ Sample container(s) not labeled
- ☐ Client sample label(s) illegible (list container type and analysis)
- ☑ Client sample label(s) do not match COC (comment)
  - ☐ Project information
  - ☐ Client sample ID
  - ☑ Sampling date and/or time
  - ☐ Number of container(s)
  - ☐ Requested analysis
- ☐ Sample container(s) compromised (comment)
  - ☐ Broken
  - ☐ Water present in sample container
- ☐ Air sample container(s) compromised (comment)
  - ☐ Flat
  - ☐ Very low in volume
  - ☐ Leaking (not transferred; duplicate bag submitted)
  - ☐ Leaking (transferred into ECI Tedlar™ bags*)
  - ☐ Leaking (transferred into client's Tedlar™ bags*)

* Transferred at client's request.

(-9) Collection time per label is 12:43

MISCELLANEOUS: (Describe)

Comments

HEADSPACE:

(Containers with bubble > 6 mm or ¼ inch for volatile organic or dissolved gas analysis)

ECI Sample ID	ECI Container ID	Total Number**	ECI Sample ID	ECI Container ID	Total Number**

(Containers with bubble for other analysis)

ECI Sample ID	ECI Container ID	Total Number**	Requested Analysis

Comments:

Reported by: 1017

Reviewed by: 802

** Record the total number of containers (i.e., vials or bottles) for the affected sample.

Return to Contents

eurofins | Calscience

Supplemental Report 1

Additional requested analyses are reported as a stand-alone report.

WORK ORDER NUMBER: 15-08-1559

The difference is service

AIR | SOIL | WATER | MARINE CHEMISTRY

Analytical Report For

Client: Geosyntec Consultants

Client Project Name: PSG / HR1507-02

Attention: Zahra Amini
2100 Main Street, Suite 150
Huntington Beach, CA 92648-2460

Approved for release on 09/03/2015 by:
Stephen Nowak
Project Manager

ResultLink

Email your PM

Eurofins Calscience, Inc. (Calscience) certifies that the test results provided in this report meet all NELAC requirements for parameters for which accreditation is required or available. Any exceptions to NELAC requirements are noted in the case narrative. The original report of subcontracted analyses, if any, is attached to this report. The results in this report are limited to the sample(s) tested and any reproduction thereof must be made in its entirety. The client or recipient of this report is specifically prohibited from making material changes to said report and, to the extent that such changes are made, Calscience is not responsible, legally or otherwise. The client or recipient agrees to indemnify Calscience for any defense to any litigation which may arise.

eurofins | Calscience

Contents

Client Project Name: PSG / HR1507-02
Work Order Number: 15-08-1559

1 Work Order Narrative. 3

2 Sample Summary. 4

3 Client Sample Data. 5
3.1 EPA 6020 STLC ICP/MS Metals (Aqueous). 5

4 Quality Control Sample Data. 6
4.1 MS/MSD. 6
4.2 LCS/LCSD. 7

5 Sample Analysis Summary. 8

6 Glossary of Terms and Qualifiers. 9

7 Chain-of-Custody/Sample Receipt Form. 10

eurofins | Calscience

Work Order Narrative

Work Order: 15-08-1559 Page 1 of 1

Condition Upon Receipt:

Samples were received under Chain-of-Custody (COC) on 08/21/15. They were assigned to Work Order 15-08-1559.

Unless otherwise noted on the Sample Receiving forms all samples were received in good condition and within the recommended EPA temperature criteria for the methods noted on the COC. The COC and Sample Receiving Documents are integral elements of the analytical report and are presented at the back of the report.

Holding Times:

All samples were analyzed within prescribed holding times (HT) and/or in accordance with the Calscience Sample Acceptance Policy unless otherwise noted in the analytical report and/or comprehensive case narrative, if required.

Any parameter identified in 40CFR Part 136.3 Table II that is designated as "analyze immediately" with a holding time of <= 15 minutes (40CFR-136.3 Table II, footnote 4), is considered a "field" test and the reported results will be qualified as being received outside of the stated holding time unless received at the laboratory within 15 minutes of the collection time.

Quality Control:

All quality control parameters (QC) were within established control limits except where noted in the QC summary forms or described further within this report.

Subcontractor Information:

Unless otherwise noted below (or on the subcontract form), no samples were subcontracted.

Additional Comments:

Air - Sorbent-extracted air methods (EPA TO-4A, EPA TO-10, EPA TO-13A, EPA TO-17): Analytical results are converted from mass/sample basis to mass/volume basis using client-supplied air volumes.

Solid - Unless otherwise indicated, solid sample data is reported on a wet weight basis, not corrected for % moisture. All QC results are always reported on a wet weight basis.

Return to Contents

eurofins | Calscience

Sample Summary

Client:	Geosyntec Consultants 2100 Main Street, Suite 150 Huntington Beach, CA 92648-2460	Work Order:	15-08-1559
		Project Name:	PSG / HR1507-02
		PO Number:	
		Date/Time Received:	08/21/15 14:10
		Number of Containers:	84
Attn:	Zahra Amini		

Sample Identification	Lab Number	Collection Date and Time	Number of Containers	Matrix
SV-1-1	15-08-1559-1	08/20/15 09:32	5	Solid
S-2-1	15-08-1559-3	08/20/15 07:45	5	Solid
S-3-1.5	15-08-1559-5	08/20/15 08:43	5	Solid
S-6-1	15-08-1559-11	08/20/15 12:09	5	Solid

Return to Contents

eurofins | Calscience

Analytical Report

Geosyntec Consultants		Date Received:	08/21/15
2100 Main Street, Suite 150		Work Order:	15-08-1559
Huntington Beach, CA 92648-2460		Preparation:	T22.11.5. AII
		Method:	EPA 6020
		Units:	mg/L
Project: PSG / HR1507-02			Page 1 of 1

Client Sample Number	Lab Sample Number	Date/Time Collected	Matrix	Instrument	Date Prepared	Date/Time Analyzed	QC Batch ID
SV-1-1	**15-08-1559-1-A**	**08/20/15 09:32**	**Solid**	**ICP/MS 03**	**08/28/15**	**08/31/15 14:30**	**150831LA4**

Comment(s): - The analysis was performed on a STLC extract of the sample.

Parameter	Result	RL	DF	Qualifiers
Lead	0.733	0.100	10.0	

S-2-1	**15-08-1559-3-A**	**08/20/15 07:45**	**Solid**	**ICP/MS 03**	**08/28/15**	**08/31/15 14:33**	**150831LA4**

Comment(s): - The analysis was performed on a STLC extract of the sample.

Parameter	Result	RL	DF	Qualifiers
Lead	11.7	0.100	10.0	

S-3-1.5	**15-08-1559-5-A**	**08/20/15 08:43**	**Solid**	**ICP/MS 03**	**08/28/15**	**08/31/15 14:37**	**150831LA4**

Comment(s): - The analysis was performed on a STLC extract of the sample.

Parameter	Result	RL	DF	Qualifiers
Lead	15.6	0.100	10.0	

S-6-1	**15-08-1559-11-A**	**08/20/15 12:09**	**Solid**	**ICP/MS 03**	**08/28/15**	**08/31/15 14:40**	**150831LA4**

Comment(s): - The analysis was performed on a STLC extract of the sample.

Parameter	Result	RL	DF	Qualifiers
Lead	0.969	0.100	10.0	

Method Blank	**099-14-037-170**	**N/A**	**Aqueous**	**ICP/MS 03**	**08/28/15**	**08/31/15 14:12**	**150831LA4**

Parameter	Result	RL	DF	Qualifiers
Lead	ND	0.100	10.0	

Return to Contents

RL: Reporting Limit. DF: Dilution Factor. MDL: Method Detection Limit.

eurofins | Calscience

Quality Control - Spike/Spike Duplicate

Geosyntec Consultants		Date Received:	08/21/15
2100 Main Street, Suite 150		Work Order:	15-08-1559
Huntington Beach, CA 92648-2460		Preparation:	T22.11.5. AII
		Method:	EPA 6020
Project: PSG / HR1507-02			Page 1 of 1

Quality Control Sample ID	Type	Matrix	Instrument	Date Prepared	Date Analyzed	MS/MSD Batch Number
SV-1-1	**Sample**	**Solid**	**ICP/MS 03**	**08/28/15**	**08/31/15 14:30**	**150831SA4**
SV-1-1	**Matrix Spike**	**Solid**	**ICP/MS 03**	**08/28/15**	**08/31/15 14:19**	**150831SA4**
SV-1-1	**Matrix Spike Duplicate**	**Solid**	**ICP/MS 03**	**08/28/15**	**08/31/15 14:23**	**150831SA4**

Parameter	Sample Conc.	Spike Added	MS Conc.	MS %Rec.	MSD Conc.	MSD %Rec.	%Rec. CL	RPD	RPD CL	Qualifiers
Lead	0.7329	5.000	5.522	96	6.194	109	79-121	11	0-10	4

RPD: Relative Percent Difference. CL: Control Limits

Return to Contents

eurofins | Calscience

Quality Control - LCS

Geosyntec Consultants		Date Received:	08/21/15
2100 Main Street, Suite 150		Work Order:	15-08-1559
Huntington Beach, CA 92648-2460		Preparation:	T22.11.5. AII
		Method:	EPA 6020
Project: PSG / HR1507-02			Page 1 of 1

Quality Control Sample ID	Type	Matrix	Instrument	Date Prepared	Date Analyzed	LCS Batch Number
099-14-037-170	**LCS**	**Aqueous**	**ICP/MS 03**	**08/28/15**	**08/31/15 14:16**	**150831LA4**

Parameter	Spike Added	Conc. Recovered	LCS %Rec.	%Rec. CL	Qualifiers
Lead	5.000	5.472	109	80-120	

RPD: Relative Percent Difference. CL: Control Limits

Return to Contents

eurofins | Calscience

Sample Analysis Summary Report

Work Order: 15-08-1559

Method	Extraction	Chemist ID	Instrument	Analytical Location
EPA 6020	T22.11.5. AII	598	ICP/MS 03	1

Return to Contents

eurofins | Calscience

Glossary of Terms and Qualifiers

Work Order: 15-08-1559

Qualifiers	Definition
*	See applicable analysis comment.
<	Less than the indicated value.
>	Greater than the indicated value.
1	Surrogate compound recovery was out of control due to a required sample dilution. Therefore, the sample data was reported without further clarification.
2	Surrogate compound recovery was out of control due to matrix interference. The associated method blank surrogate spike compound was in control and, therefore, the sample data was reported without further clarification.
3	Recovery of the Matrix Spike (MS) or Matrix Spike Duplicate (MSD) compound was out of control due to suspected matrix interference. The associated LCS recovery was in control.
4	The MS/MSD RPD was out of control due to suspected matrix interference.
5	The PDS/PDSD or PES/PESD associated with this batch of samples was out of control due to suspected matrix interference.
6	Surrogate recovery below the acceptance limit.
7	Surrogate recovery above the acceptance limit.
B	Analyte was present in the associated method blank.
BU	Sample analyzed after holding time expired.
BV	Sample received after holding time expired.
CI	See case narrative.
E	Concentration exceeds the calibration range.
ET	Sample was extracted past end of recommended max. holding time.
HD	The chromatographic pattern was inconsistent with the profile of the reference fuel standard.
HDH	The sample chromatographic pattern for TPH matches the chromatographic pattern of the specified standard but heavier hydrocarbons were also present (or detected).
HDL	The sample chromatographic pattern for TPH matches the chromatographic pattern of the specified standard but lighter hydrocarbons were also present (or detected).
J	Analyte was detected at a concentration below the reporting limit and above the laboratory method detection limit. Reported value is estimated.
JA	Analyte positively identified but quantitation is an estimate.
ME	LCS Recovery Percentage is within Marginal Exceedance (ME) Control Limit range (+/- 4 SD from the mean).
ND	Parameter not detected at the indicated reporting limit.
Q	Spike recovery and RPD control limits do not apply resulting from the parameter concentration in the sample exceeding the spike concentration by a factor of four or greater.
SG	The sample extract was subjected to Silica Gel treatment prior to analysis.
X	% Recovery and/or RPD out-of-range.
Z	Analyte presence was not confirmed by second column or GC/MS analysis.

Solid - Unless otherwise indicated, solid sample data is reported on a wet weight basis, not corrected for % moisture. All QC results are reported on a wet weight basis.

Any parameter identified in 40CFR Part 136.3 Table II that is designated as "analyze immediately" with a holding time of <= 15 minutes (40CFR-136.3 Table II, footnote 4), is considered a "field" test and the reported results will be qualified as being received outside of the stated holding time unless received at the laboratory within 15 minutes of the collection time.

A calculated total result (Example: Total Pesticides) is the summation of each component concentration and/or, if "J" flags are reported, estimated concentration. Component concentrations showing not detected (ND) are summed into the calculated total result as zero concentrations.

Return to Contents

eurofins | Calscience

7440 Lincoln Way, Garden Grove, CA 92841-1427 • (714) 895-5494
For courier service / sample drop off information, contact us26_sales@eurofinsus.com or call us.

CHAIN-OF-CUSTODY RECORD

DATE: 08/20/2015
PAGE: 1 OF 3

WO NO. / LAB USE ONLY: 15-08-1559

LABORATORY CLIENT: GEOSYNTEC CONSULTANTS
ADDRESS: 2100 MAIN ST #150
CITY: HUNTINGTON BEACH STATE: CA ZIP: 92648
TEL: 714 969-0800 E-MAIL: ZAMINI@GEOSYNTEC.COM

CLIENT PROJECT NAME / NO.: PSG HR1507-02
P.O. NO.:
PROJECT CONTACT: ZAHRA AMINI
LAB CONTACT OR QUOTE NO.:
GLOBAL ID:
LOG CODE:
SAMPLER(S): (PRINT) VIVEK MANICKAM

TURNAROUND TIME (Rush surcharges may apply to any TAT not "STANDARD"):
☐ SAME DAY ☐ 24 HR ☐ 48 HR ☐ 72 HR ☐ 5 DAYS ☑ STANDARD

EDD:
☐ COELT EDF ☐ OTHER

SPECIAL INSTRUCTIONS:
* SEE "HOLD" NOTE ON SELECT SAMPLE IDS - THESE ARE TO BE ANALYZED FOR METALS PENDING PRIMARY ANALYSES.

REQUESTED ANALYSES

Please check box or fill in blank as needed.

LAB USE ONLY	SAMPLE ID	SAMPLING DATE	SAMPLING TIME	MATRIX	NO. OF CONT.	Unpreserved	Preserved (5035)	Field Filtered	☑ TPH(g) ☑ GRO	☑ TPH(d) ☐ DRO / 8020	TPH ☐ C6-C36 ☐ C6-C44	TPH ____	BTEX / MTBE ☐ 8260 ☐ ____	VOCs (8260)	Oxygenates (8260)	Prep (5035) ☐ En Core ☑ Terra Core	SVOCs (8270)	Pesticides (8081)	PCBs (8082)	PAHs ☐ 8270 ☐ 8270 SIM	T22 Metals ☑ 6010/747X ☐ 6020/747X *	Cr(VI) ☐ 7196 ☐ 7199 ☐ 218.6		* NOTE: SUFFICIENT SAMPLE HAS BEEN COLLECTED TO RUN SOLUBLE - IF WE REQUEST IT. THX.
1	SV-1-1	8/20/15	9:32A	Soil	5	2	3		X	X						X					X			
2	SV-1-9	"	9:55A	"	"	"	"		X	X						X					X			
3	S-2-1	"	7:45A	"	"	"	"		X	X						X					X			
4	S-2-10	"	8:13A	"	"	"	"		X	X						X					X			
5	S-3-1.5	"	8:43A	"	"	"	"		X	X						X					X			
6	S-3-9	"	9:57A	"	"	"	"		X	X						X					X			
7	S-4-1	"	10:42A	"	"	"	"		X	X						X					X			
8	S-4-9	"	10:57P	"	"	"	"		X	X						X					X			
9	S-5-1	"	2:43P	"	"	"	"		X	X						X					X			
10	S-5-10.5	"	1:[illegible]0	"	"	"	"		X	X						X					X			

Relinquished by: (Signature)	Received by: (Signature/Affiliation)	Date:	Time:
VIVEK MANICKAM	EEZ	8/21/15	1327
	EEZ	8/21/15	1410

2014-07-01 Revision

Return to Contents

Calscience Environmental Laboratories, Inc.

CHAIN OF CUSTODY RECORD

☑ SoCal Laboratory
7440 Lincoln Way
Garden Grove, CA 92841-1427
(714) 895-5494

☐ NorCal Service Center
5063 Commercial Circle, Suite H
Concord, CA 94520-8577
(925) 689-9022

WO # / LAB USE ONLY: 0 8 - 1 5 5 9

Date: 8/20/2015

Page 2 of 3

LABORATORY CLIENT: GEOSYNTEC CONSULTANTS

ADDRESS: SEE PAGE 1 OF 3

CITY | STATE | ZIP

TEL: | E-MAIL:

CLIENT PROJECT NAME / NUMBER:

P.O. NO.:

PROJECT CONTACT: ZAHRA AMINI

SAMPLER(S): (PRINT)

TURNAROUND TIME:
☐ SAME DAY ☐ 24 HR ☐ 48 HR ☐ 72 HR ☑ STANDARD

☐ COELT EDF | GLOBAL ID | LOG CODE

SPECIAL INSTRUCTIONS:

REQUESTED ANALYSES

LAB USE ONLY	SAMPLE ID	SAMPLING DATE	SAMPLING TIME	MATRIX	NO. OF CONT.	Unpreserved	Preserved	Field Filtered	TPH (g) or GRO	TPH (d) or DRO or (C6-C36) or (C6-C44)	TPH ( )	BTEX / MTBE (8260) or ( )	VOCs (8260)	Oxygenates (8260)	En Core / Terra Core Prep (5035)	SVOCs (8270)	Pesticides (8081)	PCBs (8082)	PNAs (8310) or (8270)	T22 Metals (6010/747X) *	Cr(VI) [7196 or 7199 or 218.6]	Air - VOCs (TO-14A) or (TO-15)	Air - TPH (g) [TO-3]	* SEE NOTE PAGE 1	
11	S-6-1	8/20/15	12:09p	SOIL	5	2	3		X	X					X					X					
12	S-6-9	8/20/15	12:25p	"	5	"	"		X	X					X					X					
13	SV-7-1	8/20/15	11:22A	"	5	"	"		X	X					X					X					
14	SV-7-10	8/20/15	11:40A	"	5	"	"		X	X					X					X					
15	SV-1-3	"	9:45A	"	1	✓																			
16	SV-1-7	"	9:50A	"	1	✓																			
17	S-2-3	"	7:50A	"	1	✓																			
18	S-2-7	"	8:05A	"	1	✓																			
19	S-3-3	"	8:50A	"	1	✓																			

ON HOLD

Relinquished by: (Signature)	Received by: (Signature/Affiliation)	Date:	Time:
VIVEK MANICKAM	[signature]	8/21/15	1335
[signature]	[signature]	8/21/15	1410

DISTRIBUTION: White with final report, Green and Yellow to Client.
Please note that pages 1 and 2 of 2 of our T/Cs are printed on the reverse side of the Green and Yellow copies respectively.

06/01/10 Revision

Return to Contents

Calscience Environmental Laboratories, Inc.

7440 Lincoln Way, Garden Grove, CA 92841-1427 • (714) 895-5494
Other locations: Concord, San Luis Obispo, Houston, and Corpus Christi
For courier service / sample drop off information,
contact sales@calscience.com or call us.

CHAIN OF CUSTODY RECORD

WO # / LAB USE ONLY: 15-08-1559

Date: 8/20/15

Page 3 of 3

LABORATORY CLIENT: GEOSYNTEC CONSULTANTS

ADDRESS: SEE PAGE 1

CITY: STATE: ZIP:

TEL: E-MAIL:

CLIENT PROJECT NAME / NUMBER:

P.O. NO.:

PROJECT CONTACT: ZAHRA AMINI

SAMPLER(S): (PRINT)

TURNAROUND TIME (Rush surcharges may apply to any TAT not "STANDARD"):
☐ SAME DAY ☐ 24 HR ☐ 48 HR ☐ 72 HR ☐ 5 DAYS ☑ STANDARD

☐ COELT EDF GLOBAL ID LOG CODE

SPECIAL INSTRUCTIONS:

REQUESTED ANALYSES

Please check box or fill in blank as needed.

LAB USE ONLY	SAMPLE ID	SAMPLING DATE	SAMPLING TIME	MATRIX	NO. OF CONT.	Unpreserved	Preserved	Field Filtered	☐ TPH(g) ☐ GRO	☐ TPH(d) ☐ DRO	TPH ☐ C6-C36 ☐ C6-C44	TPH ___	BTEX / MTBE ☐ 8260 ☐ ___	VOCs (8260)	Oxygenates (8260)	Prep (5035) ☐ En Core ☐ Terra Core	SVOCs (8270)	Pesticides (8081)	PCBs (8082)	PAHs ☐ 8270 ☐ 8270 SIM	T22 Metals ☐ 6010/747X ☐ 6020/747X	Cr(VI) ☐ 7196 ☐ 7199 ☐ 218.6	* SEE NOTE PAGE 1			
20	S-3-7	8/20/15	8:54A	SOIL	1	✓																				
21	S-4-3	"	10:53A	"	1	✓																				
22	S-4-7	"	10:54A	"	1	✓																				
23	S-5-3	"	12:40P	"	1	✓																				
24	S-5-7	"	12:50P	"	1	✓																				
25	S-6-3	"	12:22P	"	1	✓																				
26	S-6-7	"	12:26P	"	1	✓																				
27	SV-7-3	"	11:33A	"	1	✓																				
28	SV-7-7	"	11:35A	"	1	✓																				

ON HOLD

Relinquished by: (Signature)	Received by: (Signature/Affiliation)	Date:	Time:
VIVEK MANICKAM	ECL	8/21/15	1327
	ECL	8/21/15	1410

DISTRIBUTION: White with final report, Green and Yellow to Client.
Please note that pages 1 and 2 of 2 of our T/Cs are printed on the reverse side of the Green and Yellow copies, respectively.

01/01/14 Revision

Return to Contents

eurofins | Calscience

WORK ORDER NUMBER: 15-08- 1559

SAMPLE RECEIPT CHECKLIST

COOLER 1 OF 2

CLIENT: GEOSYNTEC

DATE: 08 / 21 / 2015

TEMPERATURE: (Criteria: 0.0°C – 6.0°C, not frozen except sediment/tissue)

Thermometer ID: SC5 (CF:-0.2°C); Temperature (w/o CF): 3.2 °C (w/ CF): 3.0 °C; ☑ Blank ☐ Sample

☐ Sample(s) outside temperature criteria (PM/APM contacted by: _____)

☐ Sample(s) outside temperature criteria but received on ice/chilled on same day of sampling

☐ Sample(s) received at ambient temperature; placed on ice for transport by courier

Ambient Temperature: ☐ Air ☐ Filter Checked by: 678

CUSTODY SEAL:

Cooler	☐ Present and Intact	☐ Present but Not Intact	☑ Not Present	☐ N/A	Checked by: 678
Sample(s)	☐ Present and Intact	☐ Present but Not Intact	☑ Not Present	☐ N/A	Checked by: 1017

SAMPLE CONDITION:

	Yes	No	N/A
Chain-of-Custody (COC) document(s) received with samples	☑	☐	☐
COC document(s) received complete	☑	☐	☐
☐ Sampling date ☐ Sampling time ☐ Matrix ☐ Number of containers			
☐ No analysis requested ☐ Not relinquished ☐ No relinquished date ☐ No relinquished time			
Sampler's name indicated on COC	☑	☐	☐
Sample container label(s) consistent with COC	☐	☑	☐
Sample container(s) intact and in good condition	☑	☐	☐
Proper containers for analyses requested	☑	☐	☐
Sufficient volume/mass for analyses requested	☑	☐	☐
Samples received within holding time	☑	☐	☐
Aqueous samples for certain analyses received within 15-minute holding time			
☐ pH ☐ Residual Chlorine ☐ Dissolved Sulfide ☐ Dissolved Oxygen	☐	☐	☑
Proper preservation chemical(s) noted on COC and/or sample container	☑	☐	☐
Unpreserved aqueous sample(s) received for certain analyses			
☐ Volatile Organics ☐ Total Metals ☐ Dissolved Metals			
Container(s) for certain analysis free of headspace	☐	☐	☑
☐ Volatile Organics ☐ Dissolved Gases (RSK-175) ☐ Dissolved Oxygen (SM 4500)			
☐ Carbon Dioxide (SM 4500) ☐ Ferrous Iron (SM 3500) ☐ Hydrogen Sulfide (Hach)			
Tedlar™ bag(s) free of condensation	☐	☐	☑

CONTAINER TYPE: (Trip Blank Lot Number: _____)

Aqueous: ☐ VOA ☐ VOA**h** ☐ VOA**na$_2$** ☐ 100PJ ☐ 100PJ**na$_2$** ☐ 125AGB ☐ 125AGB**h** ☐ 125AGB**p** ☐ 125PB

☐ 125PB**znna** ☐ 250AGB ☐ 250CGB ☐ 250CGB**s** ☐ 250PB ☐ 250PB**n** ☐ 500AGB ☐ 500AGJ ☐ 500AGJ**s**

☐ 500PB ☐ 1AGB ☐ 1AGB**na$_2$** ☐ 1AGB**s** ☐ 1PB ☐ 1PB**na** ☐ _____ ☐ _____ ☐ _____ ☐ _____

Solid: ☐ 4ozCGJ ☑ 8ozCGJ ☐ 16ozCGJ ☐ Sleeve (_____) ☐ EnCores® (_____) ☑ TerraCores® (3) ☑ 2oz PJ

Air: ☐ Tedlar™ ☐ Canister ☐ Sorbent Tube ☐ PUF ☐ _____ **Other Matrix** (_____): ☐ _____ ☐ _____

Container: **A** = Amber, **B** = Bottle, **C** = Clear, **E** = Envelope, **G** = Glass, **J** = Jar, **P** = Plastic, and **Z** = Ziploc/Resealable Bag

Preservative: **b** = buffered, **f** = filtered, **h** = HCl, **n** = HNO_3, **na** = NaOH, **na$_2$** = $Na_2S_2O_3$, **p** = H_3PO_4, **s** = H_2SO_4, **u** = ultra-pure, **znna** = $Zn(CH_3CO_2)_2$ + NaOH

Labeled/Checked by: 1017

Reviewed by: Sia

Return to Contents

eurofins | Calscience

WORK ORDER NUMBER: 15-08- 1559

SAMPLE RECEIPT CHECKLIST

COOLER 2 OF 2

CLIENT: Geosyntec

DATE: 08 / 21 / 2015

TEMPERATURE: (Criteria: 0.0°C – 6.0°C, not frozen except sediment/tissue)

Thermometer ID: SC5 (CF:-0.2°C); Temperature (w/o CF): 3.3 °C (w/ CF): 3.1 °C; ☐ Blank ☐ Sample

☐ Sample(s) outside temperature criteria (PM/APM contacted by: _____)

☐ Sample(s) outside temperature criteria but received on ice/chilled on same day of sampling

☐ Sample(s) received at ambient temperature; placed on ice for transport by courier

Ambient Temperature: ☐ Air ☐ Filter Checked by: 678

CUSTODY SEAL:

Cooler	☐ Present and Intact	☐ Present but Not Intact	☑ Not Present	☐ N/A	Checked by: 678
Sample(s)	☐ Present and Intact	☐ Present but Not Intact	☑ Not Present	☐ N/A	Checked by: 1017

SAMPLE CONDITION:

	Yes	No	N/A
Chain-of-Custody (COC) document(s) received with samples	☑	☐	☐
COC document(s) received complete	☑	☐	☐
☐ Sampling date ☐ Sampling time ☐ Matrix ☐ Number of containers			
☐ No analysis requested ☐ Not relinquished ☐ No relinquished date ☐ No relinquished time			
Sampler's name indicated on COC	☑	☐	☐
Sample container label(s) consistent with COC	☑	☐	☐
Sample container(s) intact and in good condition	☑	☐	☐
Proper containers for analyses requested	☑	☐	☐
Sufficient volume/mass for analyses requested	☑	☐	☐
Samples received within holding time	☑	☐	☐
Aqueous samples for certain analyses received within 15-minute holding time			
☐ pH ☐ Residual Chlorine ☐ Dissolved Sulfide ☐ Dissolved Oxygen	☐	☐	☑
Proper preservation chemical(s) noted on COC and/or sample container	☑	☐	☐
Unpreserved aqueous sample(s) received for certain analyses			
☐ Volatile Organics ☐ Total Metals ☐ Dissolved Metals			
Container(s) for certain analysis free of headspace	☐	☐	☑
☐ Volatile Organics ☐ Dissolved Gases (RSK-175) ☐ Dissolved Oxygen (SM 4500)			
☐ Carbon Dioxide (SM 4500) ☐ Ferrous Iron (SM 3500) ☐ Hydrogen Sulfide (Hach)			
Tedlar™ bag(s) free of condensation	☐	☐	☑

CONTAINER TYPE: (Trip Blank Lot Number: _____)

Aqueous: ☐ VOA ☐ VOA**h** ☐ VOA**na$_2$** ☐ 100PJ ☐ 100PJ**na$_2$** ☐ 125AGB ☐ 125AGB**h** ☐ 125AGB**p** ☐ 125PB

☐ 125PB**znna** ☐ 250AGB ☐ 250CGB ☐ 250CGB**s** ☐ 250PB ☐ 250PB**n** ☐ 500AGB ☐ 500AGJ ☐ 500AGJ**s**

☐ 500PB ☐ 1AGB ☐ 1AGB**na$_2$** ☐ 1AGB**s** ☐ 1PB ☐ 1PB**na** ☐ _____ ☐ _____ ☐ _____ ☐ _____

Solid: ☐ 4ozCGJ ☑ 8ozCGJ ☐ 16ozCGJ ☐ Sleeve (_____) ☐ EnCores® (_____) ☑ TerraCores® (3) ☑ 2ozPJ

Air: ☐ Tedlar™ ☐ Canister ☐ Sorbent Tube ☐ PUF ☐ _____ **Other Matrix** (_____): ☐ _____ ☐ _____

Container: **A** = Amber, **B** = Bottle, **C** = Clear, **E** = Envelope, **G** = Glass, **J** = Jar, **P** = Plastic, and **Z** = Ziploc/Resealable Bag

Preservative: **b** = buffered, **f** = filtered, **h** = HCl, **n** = HNO_3, **na** = NaOH, **na$_2$** = $Na_2S_2O_3$, **p** = H_3PO_4, Labeled/Checked by: 1017

s = H_2SO_4, **u** = ultra-pure, **znna** = $Zn(CH_3CO_2)_2$ + NaOH Reviewed by: [illegible]

Return to Contents

eurofins | Calscience

WORK ORDER NUMBER: 15-08- 1559

SAMPLE ANOMALY REPORT

DATE: 08 / 21 / 2015

SAMPLES, CONTAINERS, AND LABELS:

Comments

- ☐ Sample(s) NOT RECEIVED but listed on COC
- ☐ Sample(s) received but NOT LISTED on COC
- ☐ Holding time expired (list client or ECI sample ID and analysis)
- ☐ Insufficient sample amount for requested analysis (list analysis)
- ☐ Improper container(s) used (list analysis)
- ☐ Improper preservative used (list analysis)
- ☐ No preservative noted on COC or label (list analysis and notify lab)
- ☐ Sample container(s) not labeled
- ☐ Client sample label(s) illegible (list container type and analysis)
- ☑ Client sample label(s) do not match COC (comment)
  - ☐ Project information
  - ☐ Client sample ID
  - ☑ Sampling date and/or time
  - ☐ Number of container(s)
  - ☐ Requested analysis
- ☐ Sample container(s) compromised (comment)
  - ☐ Broken
  - ☐ Water present in sample container
- ☐ Air sample container(s) compromised (comment)
  - ☐ Flat
  - ☐ Very low in volume
  - ☐ Leaking (not transferred; duplicate bag submitted)
  - ☐ Leaking (transferred into ECI Tedlar™ bags*)
  - ☐ Leaking (transferred into client's Tedlar™ bags*)

* Transferred at client's request.

(-9) Collection time per label is 12:43

MISCELLANEOUS: (Describe)

Comments

HEADSPACE:

(Containers with bubble > 6 mm or ¼ inch for volatile organic or dissolved gas analysis)

ECI Sample ID	ECI Container ID	Total Number**	ECI Sample ID	ECI Container ID	Total Number**

(Containers with bubble for other analysis)

ECI Sample ID	ECI Container ID	Total Number**	Requested Analysis

Comments:

Reported by: 1017

Reviewed by: 802

** Record the total number of containers (i.e., vials or bottles) for the affected sample.

Return to Contents

Stephen Nowak

From: Zahra Amini [ZAmini@Geosyntec.com]
Sent: Friday, August 28, 2015 3:14 PM
To: Stephen Nowak
Cc: Eric Smalstig
Subject: RE: PSG / HR1507-02 / ECI 15-08-1559

Hi Steve,

Based on these results and notable concentrations of lead in the following samples we would like to request WET analysis to be done on these samples:

- SV-1-1
- S-2-1
- S-3-1.5
- S-6-1

Thanks,

Zahra Amini

Zahra Amini, Ph.D.
Engineer

2100 Main Street, Suite 150
Huntington Beach, CA 92648
Direct line: 714 465 12 46
Fax: 714 969 08 20
Cell: 714 475 86 90
www.geosyntec.com

Geosyntec consultants
engineers | scientists | innovators

This electronic mail message contains information that (a) is or may be LEGALLY PRIVILEGED, CONFIDENTIAL, PROPRIETARY IN NATURE, OR OTHERWISE PROTECTED BY LAW FROM DISCLOSURE, and (b) is intended only for the use of the Addressee(s) named herein. If you are not the intended recipient, an addressee, or the person responsible for delivering this to an addressee, you are hereby notified that reading, using, copying, or distributing any part of this message is strictly prohibited. If you have received this electronic mail message in error, please contact us immediately and take the steps necessary to delete the message completely from your computer system.

From: Stephen Nowak [mailto:StephenNowak@eurofinsUS.com]
Sent: Friday, August 28, 2015 12:36 PM
To: Zahra Amini
Subject: PSG / HR1507-02 / ECI 15-08-1559

Report and EDD are attached.

Stephen Nowak
Project Manager

Eurofins Calscience, Inc.
7440 Lincoln Way
GARDEN GROVE, CA 92841
USA
Phone: +1 714 895 5494
Mobile: +1 714 904 5230

Return to Contents

eurofins | Calscience

Supplemental Report 2

Additional requested analyses are reported as a stand-alone report.

WORK ORDER NUMBER: 15-08-1559

The difference is service

AIR | SOIL | WATER | MARINE CHEMISTRY

Analytical Report For

Client: Geosyntec Consultants

Client Project Name: PSG / HR1507-02

Attention: Zahra Amini
2100 Main Street, Suite 150
Huntington Beach, CA 92648-2460

Approved for release on 09/14/2015 by:
Stephen Nowak
Project Manager

ResultLink

Email your PM

Eurofins Calscience, Inc. (Calscience) certifies that the test results provided in this report meet all NELAC requirements for parameters for which accreditation is required or available. Any exceptions to NELAC requirements are noted in the case narrative. The original report of subcontracted analyses, if any, is attached to this report. The results in this report are limited to the sample(s) tested and any reproduction thereof must be made in its entirety. The client or recipient of this report is specifically prohibited from making material changes to said report and, to the extent that such changes are made, Calscience is not responsible, legally or otherwise. The client or recipient agrees to indemnify Calscience for any defense to any litigation which may arise.

eurofins | Calscience

Contents

Client Project Name: PSG / HR1507-02
Work Order Number: 15-08-1559

1 Work Order Narrative. 3

2 Sample Summary. 4

3 Client Sample Data. 5
3.1 EPA 6010B ICP Metals (Solid). 5
3.2 EPA 6010B STLC ICP Metals (Aqueous). 6

4 Quality Control Sample Data. 7
4.1 MS/MSD. 7
4.2 LCS/LCSD. 9

5 Sample Analysis Summary. 11

6 Glossary of Terms and Qualifiers. 12

7 Chain-of-Custody/Sample Receipt Form. 13

eurofins | Calscience

Work Order Narrative

Work Order: 15-08-1559 Page 1 of 1

Condition Upon Receipt:

Samples were received under Chain-of-Custody (COC) on 08/21/15. They were assigned to Work Order 15-08-1559.

Unless otherwise noted on the Sample Receiving forms all samples were received in good condition and within the recommended EPA temperature criteria for the methods noted on the COC. The COC and Sample Receiving Documents are integral elements of the analytical report and are presented at the back of the report.

Holding Times:

All samples were analyzed within prescribed holding times (HT) and/or in accordance with the Calscience Sample Acceptance Policy unless otherwise noted in the analytical report and/or comprehensive case narrative, if required.

Any parameter identified in 40CFR Part 136.3 Table II that is designated as "analyze immediately" with a holding time of <= 15 minutes (40CFR-136.3 Table II, footnote 4), is considered a "field" test and the reported results will be qualified as being received outside of the stated holding time unless received at the laboratory within 15 minutes of the collection time.

Quality Control:

All quality control parameters (QC) were within established control limits except where noted in the QC summary forms or described further within this report.

Subcontractor Information:

Unless otherwise noted below (or on the subcontract form), no samples were subcontracted.

Additional Comments:

Air - Sorbent-extracted air methods (EPA TO-4A, EPA TO-10, EPA TO-13A, EPA TO-17): Analytical results are converted from mass/sample basis to mass/volume basis using client-supplied air volumes.

Solid - Unless otherwise indicated, solid sample data is reported on a wet weight basis, not corrected for % moisture. All QC results are always reported on a wet weight basis.

Return to Contents

eurofins | Calscience

Sample Summary

Client:	Geosyntec Consultants 2100 Main Street, Suite 150 Huntington Beach, CA 92648-2460	Work Order:	15-08-1559
		Project Name:	PSG / HR1507-02
		PO Number:	
		Date/Time Received:	08/21/15 14:10
		Number of Containers:	84
Attn:	Zahra Amini		

Sample Identification	Lab Number	Collection Date and Time	Number of Containers	Matrix
S-2-3	15-08-1559-17	08/20/15 07:50	1	Solid
S-2-7	15-08-1559-18	08/20/15 08:05	1	Solid
S-3-3	15-08-1559-19	08/20/15 08:50	1	Solid
S-3-7	15-08-1559-20	08/20/15 08:54	1	Solid

Return to Contents

eurofins | Calscience

Analytical Report

Geosyntec Consultants		Date Received:	08/21/15
2100 Main Street, Suite 150		Work Order:	15-08-1559
Huntington Beach, CA 92648-2460		Preparation:	EPA 3050B
		Method:	EPA 6010B
		Units:	mg/kg
Project: PSG / HR1507-02			Page 1 of 1

Client Sample Number	Lab Sample Number	Date/Time Collected	Matrix	Instrument	Date Prepared	Date/Time Analyzed	QC Batch ID
S-2-3	**15-08-1559-17-A**	**08/20/15 07:50**	**Solid**	**ICP 7300**	**09/09/15**	**09/10/15 15:39**	**150909L06**

Parameter	Result	RL	DF	Qualifiers
Lead	173	0.518	1.04	

Client Sample Number	Lab Sample Number	Date/Time Collected	Matrix	Instrument	Date Prepared	Date/Time Analyzed	QC Batch ID
S-2-7	**15-08-1559-18-A**	**08/20/15 08:05**	**Solid**	**ICP 7300**	**09/09/15**	**09/10/15 15:40**	**150909L06**

Parameter	Result	RL	DF	Qualifiers
Lead	1.05	0.505	1.01	

Client Sample Number	Lab Sample Number	Date/Time Collected	Matrix	Instrument	Date Prepared	Date/Time Analyzed	QC Batch ID
S-3-3	**15-08-1559-19-A**	**08/20/15 08:50**	**Solid**	**ICP 7300**	**09/09/15**	**09/10/15 15:40**	**150909L06**

Parameter	Result	RL	DF	Qualifiers
Lead	58.6	0.508	1.02	

Client Sample Number	Lab Sample Number	Date/Time Collected	Matrix	Instrument	Date Prepared	Date/Time Analyzed	QC Batch ID
S-3-7	**15-08-1559-20-A**	**08/20/15 08:54**	**Solid**	**ICP 7300**	**09/09/15**	**09/10/15 15:41**	**150909L06**

Parameter	Result	RL	DF	Qualifiers
Lead	15.9	0.481	0.962	

Client Sample Number	Lab Sample Number	Date/Time Collected	Matrix	Instrument	Date Prepared	Date/Time Analyzed	QC Batch ID
Method Blank	**097-01-002-21737**	**N/A**	**Solid**	**ICP 7300**	**09/09/15**	**09/10/15 14:50**	**150909L06**

Parameter	Result	RL	DF	Qualifiers
Lead	ND	0.495	0.990	

Return to Contents

RL: Reporting Limit. DF: Dilution Factor. MDL: Method Detection Limit.

eurofins | Calscience

Analytical Report

Geosyntec Consultants		Date Received:	08/21/15
2100 Main Street, Suite 150		Work Order:	15-08-1559
Huntington Beach, CA 92648-2460		Preparation:	T22.11.5. AII
		Method:	EPA 6010B
		Units:	mg/L
Project: PSG / HR1507-02			Page 1 of 1

Client Sample Number	Lab Sample Number	Date/Time Collected	Matrix	Instrument	Date Prepared	Date/Time Analyzed	QC Batch ID
S-2-3	**15-08-1559-17-A**	**08/20/15 07:50**	**Solid**	**ICP 7300**	**09/09/15**	**09/11/15 18:02**	**150911LA2**

Comment(s): - The analysis was performed on a STLC extract of the sample.

Parameter	Result	RL	DF	Qualifiers
Lead	11.5	0.100	1.00	

S-2-7	**15-08-1559-18-A**	**08/20/15 08:05**	**Solid**	**ICP 7300**	**09/09/15**	**09/11/15 19:29**	**150911LA2**

Comment(s): - The analysis was performed on a STLC extract of the sample.

Parameter	Result	RL	DF	Qualifiers
Lead	ND	0.100	1.00	

S-3-3	**15-08-1559-19-A**	**08/20/15 08:50**	**Solid**	**ICP 7300**	**09/09/15**	**09/11/15 19:31**	**150911LA2**

Comment(s): - The analysis was performed on a STLC extract of the sample.

Parameter	Result	RL	DF	Qualifiers
Lead	5.89	0.100	1.00	

S-3-7	**15-08-1559-20-A**	**08/20/15 08:54**	**Solid**	**ICP 7300**	**09/09/15**	**09/11/15 19:37**	**150911LA2**

Comment(s): - The analysis was performed on a STLC extract of the sample.

Parameter	Result	RL	DF	Qualifiers
Lead	0.275	0.100	1.00	

Method Blank	**097-05-006-8033**	**N/A**	**Aqueous**	**ICP 7300**	**09/09/15**	**09/11/15 17:14**	**150911LA2**

Parameter	Result	RL	DF	Qualifiers
Lead	ND	0.100	1.00	

Return to Contents

RL: Reporting Limit. DF: Dilution Factor. MDL: Method Detection Limit.

eurofins | Calscience

Quality Control - Spike/Spike Duplicate

Geosyntec Consultants		Date Received:	08/21/15
2100 Main Street, Suite 150		Work Order:	15-08-1559
Huntington Beach, CA 92648-2460		Preparation:	EPA 3050B
		Method:	EPA 6010B
Project: PSG / HR1507-02			Page 1 of 2

Quality Control Sample ID	Type	Matrix	Instrument	Date Prepared	Date Analyzed	MS/MSD Batch Number
15-09-0571-10	**Sample**	**Solid**	**ICP 7300**	**09/09/15**	**09/10/15 14:59**	**150909S06**
15-09-0571-10	**Matrix Spike**	**Solid**	**ICP 7300**	**09/09/15**	**09/10/15 15:01**	**150909S06**
15-09-0571-10	**Matrix Spike Duplicate**	**Solid**	**ICP 7300**	**09/09/15**	**09/10/15 15:03**	**150909S06**

Parameter	Sample Conc.	Spike Added	MS Conc.	MS %Rec.	MSD Conc.	MSD %Rec.	%Rec. CL	RPD	RPD CL	Qualifiers
Lead	1.689	25.00	28.98	109	28.13	106	75-125	3	0-20	

RPD: Relative Percent Difference. CL: Control Limits

Return to Contents

eurofins | Calscience

Quality Control - Spike/Spike Duplicate

Geosyntec Consultants		Date Received:	08/21/15
2100 Main Street, Suite 150		Work Order:	15-08-1559
Huntington Beach, CA 92648-2460		Preparation:	T22.11.5. AII
		Method:	EPA 6010B
Project: PSG / HR1507-02			Page 2 of 2

Quality Control Sample ID	Type	Matrix	Instrument	Date Prepared	Date Analyzed	MS/MSD Batch Number
S-2-3	**Sample**	**Solid**	**ICP 7300**	**09/09/15**	**09/11/15 18:02**	**150911SA2**
S-2-3	**Matrix Spike**	**Solid**	**ICP 7300**	**09/09/15**	**09/11/15 18:04**	**150911SA2**
S-2-3	**Matrix Spike Duplicate**	**Solid**	**ICP 7300**	**09/09/15**	**09/11/15 18:06**	**150911SA2**

Parameter	Sample Conc.	Spike Added	MS Conc.	MS %Rec.	MSD Conc.	MSD %Rec.	%Rec. CL	RPD	RPD CL	Qualifiers
Lead	11.47	5.000	14.92	69	14.49	60	75-125	3	0-20	3

RPD: Relative Percent Difference. CL: Control Limits

Return to Contents

eurofins | Calscience

Quality Control - LCS

Geosyntec Consultants		Date Received:	08/21/15
2100 Main Street, Suite 150		Work Order:	15-08-1559
Huntington Beach, CA 92648-2460		Preparation:	EPA 3050B
		Method:	EPA 6010B
Project: PSG / HR1507-02			Page 1 of 2

Quality Control Sample ID	Type	Matrix	Instrument	Date Prepared	Date Analyzed	LCS Batch Number
097-01-002-21737	**LCS**	**Solid**	**ICP 7300**	**09/09/15**	**09/10/15 14:53**	**150909L06**

Parameter	Spike Added	Conc. Recovered	LCS %Rec.	%Rec. CL	Qualifiers
Lead	25.00	25.56	102	80-120	

RPD: Relative Percent Difference. CL: Control Limits

Return to Contents

eurofins | Calscience

Quality Control - LCS

Geosyntec Consultants		Date Received:	08/21/15
2100 Main Street, Suite 150		Work Order:	15-08-1559
Huntington Beach, CA 92648-2460		Preparation:	T22.11.5. AII
		Method:	EPA 6010B
Project: PSG / HR1507-02			Page 2 of 2

Quality Control Sample ID	Type	Matrix	Instrument	Date Prepared	Date Analyzed	LCS Batch Number
097-05-006-8033	**LCS**	**Aqueous**	**ICP 7300**	**09/09/15**	**09/11/15 17:16**	**150911LA2**

Parameter	Spike Added	Conc. Recovered	LCS %Rec.	%Rec. CL	Qualifiers
Lead	5.000	4.980	100	80-120	

Return to Contents

RPD: Relative Percent Difference. CL: Control Limits

eurofins | Calscience

Sample Analysis Summary Report

Work Order: 15-08-1559

Method	Extraction	Chemist ID	Instrument	Analytical Location
EPA 6010B	EPA 3050B	935	ICP 7300	1
EPA 6010B	T22.11.5. AII	935	ICP 7300	1

Return to Contents

eurofins | Calscience

Glossary of Terms and Qualifiers

Work Order: 15-08-1559 Page 1 of 1

Qualifiers	Definition
*	See applicable analysis comment.
<	Less than the indicated value.
>	Greater than the indicated value.
1	Surrogate compound recovery was out of control due to a required sample dilution. Therefore, the sample data was reported without further clarification.
2	Surrogate compound recovery was out of control due to matrix interference. The associated method blank surrogate spike compound was in control and, therefore, the sample data was reported without further clarification.
3	Recovery of the Matrix Spike (MS) or Matrix Spike Duplicate (MSD) compound was out of control due to suspected matrix interference. The associated LCS recovery was in control.
4	The MS/MSD RPD was out of control due to suspected matrix interference.
5	The PDS/PDSD or PES/PESD associated with this batch of samples was out of control due to suspected matrix interference.
6	Surrogate recovery below the acceptance limit.
7	Surrogate recovery above the acceptance limit.
B	Analyte was present in the associated method blank.
BU	Sample analyzed after holding time expired.
BV	Sample received after holding time expired.
CI	See case narrative.
E	Concentration exceeds the calibration range.
ET	Sample was extracted past end of recommended max. holding time.
HD	The chromatographic pattern was inconsistent with the profile of the reference fuel standard.
HDH	The sample chromatographic pattern for TPH matches the chromatographic pattern of the specified standard but heavier hydrocarbons were also present (or detected).
HDL	The sample chromatographic pattern for TPH matches the chromatographic pattern of the specified standard but lighter hydrocarbons were also present (or detected).
J	Analyte was detected at a concentration below the reporting limit and above the laboratory method detection limit. Reported value is estimated.
JA	Analyte positively identified but quantitation is an estimate.
ME	LCS Recovery Percentage is within Marginal Exceedance (ME) Control Limit range (+/- 4 SD from the mean).
ND	Parameter not detected at the indicated reporting limit.
Q	Spike recovery and RPD control limits do not apply resulting from the parameter concentration in the sample exceeding the spike concentration by a factor of four or greater.
SG	The sample extract was subjected to Silica Gel treatment prior to analysis.
X	% Recovery and/or RPD out-of-range.
Z	Analyte presence was not confirmed by second column or GC/MS analysis.
	Solid - Unless otherwise indicated, solid sample data is reported on a wet weight basis, not corrected for % moisture. All QC results are reported on a wet weight basis.
	Any parameter identified in 40CFR Part 136.3 Table II that is designated as "analyze immediately" with a holding time of <= 15 minutes (40CFR-136.3 Table II, footnote 4), is considered a "field" test and the reported results will be qualified as being received outside of the stated holding time unless received at the laboratory within 15 minutes of the collection time.
	A calculated total result (Example: Total Pesticides) is the summation of each component concentration and/or, if "J" flags are reported, estimated concentration. Component concentrations showing not detected (ND) are summed into the calculated total result as zero concentrations.

Return to Contents

eurofins | Calscience

7440 Lincoln Way, Garden Grove, CA 92841-1427 • (714) 895-5494
For courier service / sample drop off information, contact us26_sales@eurofinsus.com or call us.

CHAIN-OF-CUSTODY RECORD

DATE: 08/20/2015
PAGE: 1 OF 3

WO NO. / LAB USE ONLY: **15-08-1559**

LABORATORY CLIENT: GEOSYNTEC CONSULTANTS
ADDRESS: 2100 MAIN ST #150
CITY: HUNTINGTON BEACH STATE: CA ZIP: 92648
TEL: 714 969-0800 E-MAIL: ZAMINI@GEOSYNTEC.COM

CLIENT PROJECT NAME / NO.: PSG HR1507-02
P.O. NO.:
PROJECT CONTACT: ZAHRA AMINI
LAB CONTACT OR QUOTE NO.:
GLOBAL ID:
LOG CODE:
SAMPLER(S): (PRINT) VIVEK MANICKAM

TURNAROUND TIME (Rush surcharges may apply to any TAT not "STANDARD"):
☐ SAME DAY ☐ 24 HR ☐ 48 HR ☐ 72 HR ☐ 5 DAYS ☑ STANDARD

EDD:
☐ COELT EDF ☐ OTHER

SPECIAL INSTRUCTIONS:
* SEE "HOLD" NOTE ON SELECT SAMPLE IDS - THESE ARE TO BE ANALYZED FOR METALS PENDING PRIMARY ANALYSES.

REQUESTED ANALYSES
Please check box or fill in blank as needed.

LAB USE ONLY	SAMPLE ID	SAMPLING DATE	SAMPLING TIME	MATRIX	NO. OF CONT.	Unpreserved	Preserved (5035)	Field Filtered	☑ TPH(g) ☑ GRO	☑ TPH(d) ☐ DRO / 8020	TPH ☐ C6-C36 ☐ C6-C44	TPH ____	BTEX / MTBE ☐ 8260 ☐ ____	VOCs (8260)	Oxygenates (8260)	Prep (5035) ☐ En Core ☑ Terra Core	SVOCs (8270)	Pesticides (8081)	PCBs (8082)	PAHs ☐ 8270 ☐ 8270 SIM	T22 Metals ☑ 6010/747X ☐ 6020/747X *	Cr(VI) ☐ 7196 ☐ 7199 ☐ 218.6		* NOTE: SUFFICIENT SAMPLE HAS BEEN COLLECTED TO RUN SOLUBLE - IF WE REQUEST IT. THX.
1	SV-1-1	8/20/15	9:32A	Soil	5	2	3		X	X						X					X			
2	SV-1-9	"	9:55A	"	"	"	"		X	X						X					X			
3	S-2-1	"	7:45A	"	"	"	"		X	X						X					X			
4	S-2-10	"	8:13A	"	"	"	"		X	X						X					X			
5	S-3-1.5	"	8:43A	"	"	"	"		X	X						X					X			
6	S-3-9	"	9:57A	"	"	"	"		X	X						X					X			
7	S-4-1	"	10:42A	"	"	"	"		X	X						X					X			
8	S-4-9	"	10:57P	"	"	"	"		X	X						X					X			
9	S-5-1	"	2:43P	"	"	"	"		X	X						X					X			
10	S-5-10.5	"	1:00P	"	"	"	"		X	X						X					X			

Relinquished by: (Signature)	Received by: (Signature/Affiliation)	Date:	Time:
VIVEK MANICKAM	EEZ	8/21/15	1327
	EEZ	8/21/15	1410

2014-07-01 Revision

Return to Contents

Calscience Environmental Laboratories, Inc.

CHAIN OF CUSTODY RECORD

☑ SoCal Laboratory
7440 Lincoln Way
Garden Grove, CA 92841-1427
(714) 895-5494

☐ NorCal Service Center
5063 Commercial Circle, Suite H
Concord, CA 94520-8577
(925) 689-9022

WO # / LAB USE ONLY: 0 8 - 1 5 5 9

Date: 8/20/2015

Page 2 of 3

LABORATORY CLIENT: GEOSYNTEC CONSULTANTS

ADDRESS: SEE PAGE 1 OF 3

CITY | STATE | ZIP

TEL: | E-MAIL:

CLIENT PROJECT NAME / NUMBER:

P.O. NO.:

PROJECT CONTACT: ZAHRA AMINI

SAMPLER(S): (PRINT)

TURNAROUND TIME:
☐ SAME DAY ☐ 24 HR ☐ 48 HR ☐ 72 HR ☑ STANDARD

☐ COELT EDF | GLOBAL ID | LOG CODE

SPECIAL INSTRUCTIONS:

REQUESTED ANALYSES

LAB USE ONLY	SAMPLE ID	SAMPLING DATE	SAMPLING TIME	MATRIX	NO. OF CONT.	Unpreserved	Preserved	Field Filtered	TPH (g) or GRO	TPH (d) or DRO or (C6-C36) or (C6-C44)	TPH ( )	BTEX / MTBE (8260) or ( )	VOCs (8260)	Oxygenates (8260)	En Core / Terra Core Prep (5035)	SVOCs (8270)	Pesticides (8081)	PCBs (8082)	PNAs (8310) or (8270)	T22 Metals (6010/747X) *	Cr(VI) [7196 or 7199 or 218.6]	Air - VOCs (TO-14A) or (TO-15)	Air - TPH (g) [TO-3]	* SEE NOTE PAGE 1		
11	S-6-1	8/20/15	12:09p	SOIL	5	2	3		X	X					X					X				*		
12	S-6-9	8/20/15	12:25p	"	5	"	"		X	X					X					X						
13	SV-7-1	8/20/15	11:22A	"	5	"	"		X	X					X					X						
14	SV-7-10	8/20/15	11:40A	"	5	"	"		X	X					X					X						
15	SV-1-3	"	9:45A	"	1	✓																				
16	SV-1-7	"	9:50A	"	1	✓																				
17	S-2-3	"	7:50A	"	1	✓																				
18	S-2-7	"	8:05A	"	1	✓																				
19	S-3-3	"	8:50A	"	1	✓																				

ON HOLD

Relinquished by: (Signature)	Received by: (Signature/Affiliation)	Date:	Time:
VIVEK MANICKAM	CEL	8/21/15	1335
	CEL	8/21/15	1410

DISTRIBUTION: White with final report, Green and Yellow to Client.
Please note that pages 1 and 2 of 2 of our T/Cs are printed on the reverse side of the Green and Yellow copies respectively.

06/01/10 Revision

Return to Contents

Calscience Environmental Laboratories, Inc.

7440 Lincoln Way, Garden Grove, CA 92841-1427 • (714) 895-5494
Other locations: Concord, San Luis Obispo, Houston, and Corpus Christi
For courier service / sample drop off information,
contact sales@calscience.com or call us.

CHAIN OF CUSTODY RECORD

WO # / LAB USE ONLY: 15-08-1559

Date: 8/20/15

Page 3 of 3

LABORATORY CLIENT: GEOSYNTEC CONSULTANTS

ADDRESS: SEE PAGE 1

CITY: STATE: ZIP:

TEL: E-MAIL:

CLIENT PROJECT NAME / NUMBER:

P.O. NO.:

PROJECT CONTACT: ZAHRA AMINI

SAMPLER(S): (PRINT)

TURNAROUND TIME (Rush surcharges may apply to any TAT not "STANDARD"):
☐ SAME DAY ☐ 24 HR ☐ 48 HR ☐ 72 HR ☐ 5 DAYS ☑ STANDARD

☐ COELT EDF GLOBAL ID LOG CODE

SPECIAL INSTRUCTIONS:

REQUESTED ANALYSES

Please check box or fill in blank as needed.

LAB USE ONLY	SAMPLE ID	SAMPLING DATE	SAMPLING TIME	MATRIX	NO. OF CONT.	Unpreserved	Preserved	Field Filtered	☐ TPH(g) ☐ GRO	☐ TPH(d) ☐ DRO	TPH ☐ C6-C36 ☐ C6-C44	TPH ___	BTEX / MTBE ☐ 8260 ☐ ___	VOCs (8260)	Oxygenates (8260)	Prep (5035) ☐ En Core ☐ Terra Core	SVOCs (8270)	Pesticides (8081)	PCBs (8082)	PAHs ☐ 8270 ☐ 8270 SIM	T22 Metals ☐ 6010/747X ☐ 6020/747X	Cr(VI) ☐ 7196 ☐ 7199 ☐ 218.6	* SEE NOTE PAGE 1			
20	S-3-7	8/20/15	8:54A	SOIL	1	✓																				
21	S-4-3	"	10:53A	"	1	✓																				
22	S-4-7	"	10:54A	"	1	✓																				
23	S-5-3	"	12:40P	"	1	✓																				
24	S-5-7	"	12:50P	"	1	✓																				
25	S-6-3	"	12:22P	"	1	✓																				
26	S-6-7	"	12:26P	"	1	✓																				
27	SV-7-3	"	11:33A	"	1	✓																				
28	SV-7-7	"	11:35A	"	1	✓																				

ON HOLD

Relinquished by: (Signature)	Received by: (Signature/Affiliation)	Date:	Time:
VIVEK MANICKAM	ECL	8/21/15	1327
	ECL	8/21/15	1410

DISTRIBUTION: White with final report, Green and Yellow to Client.
Please note that pages 1 and 2 of 2 of our T/Cs are printed on the reverse side of the Green and Yellow copies, respectively.

01/01/14 Revision

Return to Contents

eurofins | Calscience

WORK ORDER NUMBER: 15-08- 1559

SAMPLE RECEIPT CHECKLIST

COOLER 1 OF 2

CLIENT: GEOSYNTEC

DATE: 08 / 21 / 2015

TEMPERATURE: (Criteria: 0.0°C – 6.0°C, not frozen except sediment/tissue)

Thermometer ID: SC5 (CF:-0.2°C); Temperature (w/o CF): 3.2 °C (w/ CF): 3.0 °C; ☑ Blank ☐ Sample

☐ Sample(s) outside temperature criteria (PM/APM contacted by: _____)

☐ Sample(s) outside temperature criteria but received on ice/chilled on same day of sampling

☐ Sample(s) received at ambient temperature; placed on ice for transport by courier

Ambient Temperature: ☐ Air ☐ Filter Checked by: 678

CUSTODY SEAL:

Cooler	☐ Present and Intact	☐ Present but Not Intact	☑ Not Present	☐ N/A	Checked by: 678
Sample(s)	☐ Present and Intact	☐ Present but Not Intact	☑ Not Present	☐ N/A	Checked by: 1017

SAMPLE CONDITION:

	Yes	No	N/A
Chain-of-Custody (COC) document(s) received with samples	☑	☐	☐
COC document(s) received complete	☑	☐	☐
☐ Sampling date ☐ Sampling time ☐ Matrix ☐ Number of containers			
☐ No analysis requested ☐ Not relinquished ☐ No relinquished date ☐ No relinquished time			
Sampler's name indicated on COC	☑	☐	☐
Sample container label(s) consistent with COC	☐	☑	☐
Sample container(s) intact and in good condition	☑	☐	☐
Proper containers for analyses requested	☑	☐	☐
Sufficient volume/mass for analyses requested	☑	☐	☐
Samples received within holding time	☑	☐	☐
Aqueous samples for certain analyses received within 15-minute holding time			
☐ pH ☐ Residual Chlorine ☐ Dissolved Sulfide ☐ Dissolved Oxygen	☐	☐	☑
Proper preservation chemical(s) noted on COC and/or sample container	☑	☐	☐
Unpreserved aqueous sample(s) received for certain analyses			
☐ Volatile Organics ☐ Total Metals ☐ Dissolved Metals			
Container(s) for certain analysis free of headspace	☐	☐	☑
☐ Volatile Organics ☐ Dissolved Gases (RSK-175) ☐ Dissolved Oxygen (SM 4500)			
☐ Carbon Dioxide (SM 4500) ☐ Ferrous Iron (SM 3500) ☐ Hydrogen Sulfide (Hach)			
Tedlar™ bag(s) free of condensation	☐	☐	☑

CONTAINER TYPE: (Trip Blank Lot Number: _____)

Aqueous: ☐ VOA ☐ VOA**h** ☐ VOA**na$_2$** ☐ 100PJ ☐ 100PJ**na$_2$** ☐ 125AGB ☐ 125AGB**h** ☐ 125AGB**p** ☐ 125PB

☐ 125PB**znna** ☐ 250AGB ☐ 250CGB ☐ 250CGB**s** ☐ 250PB ☐ 250PB**n** ☐ 500AGB ☐ 500AGJ ☐ 500AGJ**s**

☐ 500PB ☐ 1AGB ☐ 1AGB**na$_2$** ☐ 1AGB**s** ☐ 1PB ☐ 1PB**na** ☐ _____ ☐ _____ ☐ _____ ☐ _____

Solid: ☐ 4ozCGJ ☑ 8ozCGJ ☐ 16ozCGJ ☐ Sleeve (_____) ☐ EnCores® (_____) ☑ TerraCores® (3) ☑ 2oz PJ

Air: ☐ Tedlar™ ☐ Canister ☐ Sorbent Tube ☐ PUF ☐ _____ **Other Matrix** (_____): ☐ _____ ☐ _____

Container: **A** = Amber, **B** = Bottle, **C** = Clear, **E** = Envelope, **G** = Glass, **J** = Jar, **P** = Plastic, and **Z** = Ziploc/Resealable Bag

Preservative: **b** = buffered, **f** = filtered, **h** = HCl, **n** = HNO_3, **na** = NaOH, **na$_2$** = $Na_2S_2O_3$, **p** = H_3PO_4, **s** = H_2SO_4, **u** = ultra-pure, **znna** = $Zn(CH_3CO_2)_2$ + NaOH

Labeled/Checked by: 1017

Reviewed by: Sir

Return to Contents

eurofins | Calscience

WORK ORDER NUMBER: 15-08- 1559

SAMPLE RECEIPT CHECKLIST

COOLER 2 OF 2

CLIENT: Geosyntec

DATE: 08 / 21 / 2015

TEMPERATURE: (Criteria: 0.0°C – 6.0°C, not frozen except sediment/tissue)

Thermometer ID: SC5 (CF:-0.2°C); Temperature (w/o CF): 3.3 °C (w/ CF): 3.1 °C; ☐ Blank ☐ Sample

☐ Sample(s) outside temperature criteria (PM/APM contacted by: _____)

☐ Sample(s) outside temperature criteria but received on ice/chilled on same day of sampling

☐ Sample(s) received at ambient temperature; placed on ice for transport by courier

Ambient Temperature: ☐ Air ☐ Filter Checked by: 678

CUSTODY SEAL:

Cooler	☐ Present and Intact	☐ Present but Not Intact	☑ Not Present	☐ N/A	Checked by: 678
Sample(s)	☐ Present and Intact	☐ Present but Not Intact	☑ Not Present	☐ N/A	Checked by: 1017

SAMPLE CONDITION:

	Yes	No	N/A
Chain-of-Custody (COC) document(s) received with samples	☑	☐	☐
COC document(s) received complete	☑	☐	☐
☐ Sampling date ☐ Sampling time ☐ Matrix ☐ Number of containers			
☐ No analysis requested ☐ Not relinquished ☐ No relinquished date ☐ No relinquished time			
Sampler's name indicated on COC	☑	☐	☐
Sample container label(s) consistent with COC	☑	☐	☐
Sample container(s) intact and in good condition	☑	☐	☐
Proper containers for analyses requested	☑	☐	☐
Sufficient volume/mass for analyses requested	☑	☐	☐
Samples received within holding time	☑	☐	☐
Aqueous samples for certain analyses received within 15-minute holding time			
☐ pH ☐ Residual Chlorine ☐ Dissolved Sulfide ☐ Dissolved Oxygen	☐	☐	☑
Proper preservation chemical(s) noted on COC and/or sample container	☑	☐	☐
Unpreserved aqueous sample(s) received for certain analyses			
☐ Volatile Organics ☐ Total Metals ☐ Dissolved Metals			
Container(s) for certain analysis free of headspace	☐	☐	☑
☐ Volatile Organics ☐ Dissolved Gases (RSK-175) ☐ Dissolved Oxygen (SM 4500)			
☐ Carbon Dioxide (SM 4500) ☐ Ferrous Iron (SM 3500) ☐ Hydrogen Sulfide (Hach)			
Tedlar™ bag(s) free of condensation	☐	☐	☑

CONTAINER TYPE: (Trip Blank Lot Number: _____)

Aqueous: ☐ VOA ☐ VOA**h** ☐ VOA**na$_2$** ☐ 100PJ ☐ 100PJ**na$_2$** ☐ 125AGB ☐ 125AGB**h** ☐ 125AGB**p** ☐ 125PB

☐ 125PB**znna** ☐ 250AGB ☐ 250CGB ☐ 250CGB**s** ☐ 250PB ☐ 250PB**n** ☐ 500AGB ☐ 500AGJ ☐ 500AGJ**s**

☐ 500PB ☐ 1AGB ☐ 1AGB**na$_2$** ☐ 1AGB**s** ☐ 1PB ☐ 1PB**na** ☐ _____ ☐ _____ ☐ _____ ☐ _____

Solid: ☐ 4ozCGJ ☑ 8ozCGJ ☐ 16ozCGJ ☐ Sleeve (_____) ☐ EnCores® (_____) ☑ TerraCores® (3) ☑ 2ozPJ

Air: ☐ Tedlar™ ☐ Canister ☐ Sorbent Tube ☐ PUF ☐ _____ **Other Matrix** (_____): ☐ _____ ☐ _____

Container: **A** = Amber, **B** = Bottle, **C** = Clear, **E** = Envelope, **G** = Glass, **J** = Jar, **P** = Plastic, and **Z** = Ziploc/Resealable Bag

Preservative: **b** = buffered, **f** = filtered, **h** = HCl, **n** = HNO_3, **na** = NaOH, **na$_2$** = $Na_2S_2O_3$, **p** = H_3PO_4, **s** = H_2SO_4, **u** = ultra-pure, **znna** = $Zn(CH_3CO_2)_2$ + NaOH

Labeled/Checked by: 1017

Reviewed by: [illegible]

Return to Contents

eurofins | Calscience

WORK ORDER NUMBER: 15-08- 1559

SAMPLE ANOMALY REPORT

DATE: 08 / 21 / 2015

SAMPLES, CONTAINERS, AND LABELS:

Comments

- ☐ Sample(s) NOT RECEIVED but listed on COC
- ☐ Sample(s) received but NOT LISTED on COC
- ☐ Holding time expired (list client or ECI sample ID and analysis)
- ☐ Insufficient sample amount for requested analysis (list analysis)
- ☐ Improper container(s) used (list analysis)
- ☐ Improper preservative used (list analysis)
- ☐ No preservative noted on COC or label (list analysis and notify lab)
- ☐ Sample container(s) not labeled
- ☐ Client sample label(s) illegible (list container type and analysis)
- ☑ Client sample label(s) do not match COC (comment)
  - ☐ Project information
  - ☐ Client sample ID
  - ☑ Sampling date and/or time
  - ☐ Number of container(s)
  - ☐ Requested analysis
- ☐ Sample container(s) compromised (comment)
  - ☐ Broken
  - ☐ Water present in sample container
- ☐ Air sample container(s) compromised (comment)
  - ☐ Flat
  - ☐ Very low in volume
  - ☐ Leaking (not transferred; duplicate bag submitted)
  - ☐ Leaking (transferred into ECI Tedlar™ bags*)
  - ☐ Leaking (transferred into client's Tedlar™ bags*)

* Transferred at client's request.

(-9) Collection time per label is 12:43

MISCELLANEOUS: (Describe)

Comments

HEADSPACE:

(Containers with bubble > 6 mm or ¼ inch for volatile organic or dissolved gas analysis)

ECI Sample ID	ECI Container ID	Total Number**	ECI Sample ID	ECI Container ID	Total Number**

(Containers with bubble for other analysis)

ECI Sample ID	ECI Container ID	Total Number**	Requested Analysis

Comments:

Reported by: 1017

Reviewed by: 802

** Record the total number of containers (i.e., vials or bottles) for the affected sample.

Return to Contents

Stephen Nowak

From: Zahra Amini [ZAmini@Geosyntec.com]
Sent: Friday, August 28, 2015 3:14 PM
To: Stephen Nowak
Cc: Eric Smalstig
Subject: RE: PSG / HR1507-02 / ECI 15-08-1559

Hi Steve,

Based on these results and notable concentrations of lead in the following samples we would like to request WET analysis to be done on these samples:

- SV-1-1
- S-2-1
- S-3-1.5
- S-6-1

Thanks,

Zahra Amini

Zahra Amini, Ph.D.
Engineer

2100 Main Street, Suite 150
Huntington Beach, CA 92648
Direct line: 714 465 12 46
Fax: 714 969 08 20
Cell: 714 475 86 90
www.geosyntec.com

Geosyntec consultants
engineers | scientists | innovators

This electronic mail message contains information that (a) is or may be LEGALLY PRIVILEGED, CONFIDENTIAL, PROPRIETARY IN NATURE, OR OTHERWISE PROTECTED BY LAW FROM DISCLOSURE, and (b) is intended only for the use of the Addressee(s) named herein. If you are not the intended recipient, an addressee, or the person responsible for delivering this to an addressee, you are hereby notified that reading, using, copying, or distributing any part of this message is strictly prohibited. If you have received this electronic mail message in error, please contact us immediately and take the steps necessary to delete the message completely from your computer system.

From: Stephen Nowak [mailto:StephenNowak@eurofinsUS.com]
Sent: Friday, August 28, 2015 12:36 PM
To: Zahra Amini
Subject: PSG / HR1507-02 / ECI 15-08-1559

Report and EDD are attached.

Stephen Nowak
Project Manager

Eurofins Calscience, Inc.
7440 Lincoln Way
GARDEN GROVE, CA 92841
USA
Phone: +1 714 895 5494
Mobile: +1 714 904 5230

Return to Contents

Stephen Nowak

From: Zahra Amini [ZAmini@Geosyntec.com]
Sent: Wednesday, September 09, 2015 9:09 AM
To: Stephen Nowak
Cc: Michele Castro
Subject: RE: PSG Total and STLC Pb

Hi Steve,

We would like to request additional testing for lead only with standard turnaround time.

Could you please perform testing for total lead and soluble lead (WET) on only the 'HOLD' soil samples from the following:

S-2-3;
S-2-7;
S-3-3; and
S-3-7.

Thank you,

Zahra Amini

Zahra Amini, Ph.D.
Engineer

2100 Main Street, Suite 150
Huntington Beach, CA 92648
Direct line: 714 465 12 46
Fax: 714 969 08 20
Cell: 714 475 86 90
www.geosyntec.com

Geosyntec consultants
engineers | scientists | innovators

This electronic mail message contains information that (a) is or may be LEGALLY PRIVILEGED, CONFIDENTIAL, PROPRIETARY IN NATURE, OR OTHERWISE PROTECTED BY LAW FROM DISCLOSURE, and (b) is intended only for the use of the Addressee(s) named herein. If you are not the intended recipient, an addressee, or the person responsible for delivering this to an addressee, you are hereby notified that reading, using, copying, or distributing any part of this message is strictly prohibited. If you have received this electronic mail message in error, please contact us immediately and take the steps necessary to delete the message completely from your computer system.

From: Michele Castro [mailto:MicheleCastro@eurofinsUS.com]
Sent: Tuesday, September 08, 2015 3:46 PM
To: Zahra Amini
Cc: Stephen Nowak
Subject: PSG Total and STLC Pb

Hi Zahra,

Here are the two quotes you requested. Let me know if you need anything else.

Kind regards,

Michele

Return to Contents

APPENDIX B-2

SOIL VAPOR LABORATORY ANALYTICAL REPORT

eurofins | Calscience

WORK ORDER NUMBER: 15-08-1921

The difference is service

AIR | SOIL | WATER | MARINE CHEMISTRY

Analytical Report For

Client: Geosyntec Consultants

Client Project Name: Pacoima / HR1507-02

Attention: Zahra Amini
2100 Main Street, Suite 150
Huntington Beach, CA 92648-2460

Approved for release on 09/03/2015 by:
Stephen Nowak
Project Manager

ResultLink

Email your PM

Eurofins Calscience, Inc. (Calscience) certifies that the test results provided in this report meet all NELAC requirements for parameters for which accreditation is required or available. Any exceptions to NELAC requirements are noted in the case narrative. The original report of subcontracted analyses, if any, is attached to this report. The results in this report are limited to the sample(s) tested and any reproduction thereof must be made in its entirety. The client or recipient of this report is specifically prohibited from making material changes to said report and, to the extent that such changes are made, Calscience is not responsible, legally or otherwise. The client or recipient agrees to indemnify Calscience for any defense to any litigation which may arise.

eurofins | Calscience

Contents

Client Project Name: Pacoima / HR1507-02
Work Order Number: 15-08-1921

1 Work Order Narrative. 3

2 Sample Summary. 4

3 Detections Summary. 5

4 Client Sample Data. 6
4.1 ASTM D-1946 Fixed Gases (Air). 6
4.2 EPA TO-15 Full List (Air). 7

5 Quality Control Sample Data. 15
5.1 LCS/LCSD. 15

6 Summa Canister Vacuum Summary. 20

7 Sample Analysis Summary. 21

8 Glossary of Terms and Qualifiers. 22

9 Chain-of-Custody/Sample Receipt Form. 23

eurofins | Calscience

Work Order Narrative

Work Order: 15-08-1921 Page 1 of 1

Condition Upon Receipt:

Samples were received under Chain-of-Custody (COC) on 08/27/15. They were assigned to Work Order 15-08-1921.

Unless otherwise noted on the Sample Receiving forms all samples were received in good condition and within the recommended EPA temperature criteria for the methods noted on the COC. The COC and Sample Receiving Documents are integral elements of the analytical report and are presented at the back of the report.

Holding Times:

All samples were analyzed within prescribed holding times (HT) and/or in accordance with the Calscience Sample Acceptance Policy unless otherwise noted in the analytical report and/or comprehensive case narrative, if required.

Any parameter identified in 40CFR Part 136.3 Table II that is designated as "analyze immediately" with a holding time of <= 15 minutes (40CFR-136.3 Table II, footnote 4), is considered a "field" test and the reported results will be qualified as being received outside of the stated holding time unless received at the laboratory within 15 minutes of the collection time.

Quality Control:

All quality control parameters (QC) were within established control limits except where noted in the QC summary forms or described further within this report.

Subcontractor Information:

Unless otherwise noted below (or on the subcontract form), no samples were subcontracted.

Additional Comments:

Air - Sorbent-extracted air methods (EPA TO-4A, EPA TO-10, EPA TO-13A, EPA TO-17): Analytical results are converted from mass/sample basis to mass/volume basis using client-supplied air volumes.

Solid - Unless otherwise indicated, solid sample data is reported on a wet weight basis, not corrected for % moisture. All QC results are always reported on a wet weight basis.

Return to Contents

eurofins | Calscience

Sample Summary

Client:	Geosyntec Consultants 2100 Main Street, Suite 150 Huntington Beach, CA 92648-2460	Work Order:	15-08-1921
		Project Name:	Pacoima / HR1507-02
		PO Number:	
		Date/Time Received:	08/27/15 15:10
		Number of Containers:	2
Attn:	Zahra Amini		

Sample Identification	Lab Number	Collection Date and Time	Number of Containers	Matrix
SV-1	15-08-1921-1	08/26/15 13:38	1	Air
SV-7	15-08-1921-2	08/26/15 14:45	1	Air

Return to Contents

eurofins | Calscience

Detections Summary

Client:	Geosyntec Consultants 2100 Main Street, Suite 150 Huntington Beach, CA 92648-2460	Work Order: Project Name: Received:	15-08-1921 Pacoima / HR1507-02 08/27/15
Attn:	Zahra Amini		

Client SampleID Analyte	Result	Qualifiers	RL	Units	Method	Extraction
SV-1 (15-08-1921-1)						
Carbon Dioxide	1.95		0.500	%v	ASTM D-1946	N/A
Oxygen (+ Argon)	21.2		0.500	%v	ASTM D-1946	N/A
Nitrogen	76.9		0.500	%v	ASTM D-1946	N/A
Acetone	22		4.8	ug/m3	EPA TO-15	N/A
Benzene	36		1.6	ug/m3	EPA TO-15	N/A
2-Butanone	8.5		4.4	ug/m3	EPA TO-15	N/A
1,4-Dichlorobenzene	5.0		3.0	ug/m3	EPA TO-15	N/A
Dichlorodifluoromethane	2.7		2.5	ug/m3	EPA TO-15	N/A
Ethylbenzene	15		2.2	ug/m3	EPA TO-15	N/A
4-Ethyltoluene	8.7		2.5	ug/m3	EPA TO-15	N/A
Tetrachloroethene	47		3.4	ug/m3	EPA TO-15	N/A
Toluene	200		1.9	ug/m3	EPA TO-15	N/A
1,2,4-Trimethylbenzene	23		7.4	ug/m3	EPA TO-15	N/A
1,3,5-Trimethylbenzene	7.9		2.5	ug/m3	EPA TO-15	N/A
o-Xylene	26		2.2	ug/m3	EPA TO-15	N/A
p/m-Xylene	100		8.7	ug/m3	EPA TO-15	N/A
SV-7 (15-08-1921-2)						
Carbon Dioxide	2.48		0.500	%v	ASTM D-1946	N/A
Oxygen (+ Argon)	20.6		0.500	%v	ASTM D-1946	N/A
Nitrogen	76.9		0.500	%v	ASTM D-1946	N/A
Acetone	14		4.8	ug/m3	EPA TO-15	N/A
2-Butanone	7.7		4.4	ug/m3	EPA TO-15	N/A
1,4-Dichlorobenzene	7.1		3.0	ug/m3	EPA TO-15	N/A
Tetrachloroethene	21		3.4	ug/m3	EPA TO-15	N/A

Subcontracted analyses, if any, are not included in this summary.

Return to Contents

* MDL is shown

eurofins | Calscience

Analytical Report

Geosyntec Consultants		Date Received:	08/27/15
2100 Main Street, Suite 150		Work Order:	15-08-1921
Huntington Beach, CA 92648-2460		Preparation:	N/A
		Method:	ASTM D-1946
		Units:	%v
Project: Pacoima / HR1507-02			Page 1 of 1

Client Sample Number	Lab Sample Number	Date/Time Collected	Matrix	Instrument	Date Prepared	Date/Time Analyzed	QC Batch ID
SV-1	**15-08-1921-1-A**	**08/26/15 13:38**	**Air**	**GC 65**	**N/A**	**08/27/15 17:10**	**150827L01**

Parameter	Result	RL	DF	Qualifiers
Methane	ND	0.500	1.00	
Carbon Dioxide	1.95	0.500	1.00	
Carbon Monoxide	ND	0.500	1.00	
Oxygen (+ Argon)	21.2	0.500	1.00	
Nitrogen	76.9	0.500	1.00	

SV-7	**15-08-1921-2-A**	**08/26/15 14:45**	**Air**	**GC 65**	**N/A**	**08/27/15 17:48**	**150827L01**

Parameter	Result	RL	DF	Qualifiers
Methane	ND	0.500	1.00	
Carbon Dioxide	2.48	0.500	1.00	
Carbon Monoxide	ND	0.500	1.00	
Oxygen (+ Argon)	20.6	0.500	1.00	
Nitrogen	76.9	0.500	1.00	

Method Blank	**099-16-444-262**	**N/A**	**Air**	**GC 65**	**N/A**	**08/27/15 10:26**	**150827L01**

Parameter	Result	RL	DF	Qualifiers
Methane	ND	0.500	1.00	
Carbon Dioxide	ND	0.500	1.00	
Carbon Monoxide	ND	0.500	1.00	
Oxygen (+ Argon)	ND	0.500	1.00	
Nitrogen	ND	0.500	1.00	

Return to Contents

RL: Reporting Limit. DF: Dilution Factor. MDL: Method Detection Limit.

eurofins | Calscience

Analytical Report

Geosyntec Consultants		Date Received:	08/27/15
2100 Main Street, Suite 150		Work Order:	15-08-1921
Huntington Beach, CA 92648-2460		Preparation:	N/A
		Method:	EPA TO-15
		Units:	ug/m3
Project: Pacoima / HR1507-02			Page 1 of 8

Client Sample Number	Lab Sample Number	Date/Time Collected	Matrix	Instrument	Date Prepared	Date/Time Analyzed	QC Batch ID
SV-1	**15-08-1921-1-A**	**08/26/15 13:38**	**Air**	**GC/MS OOO**	**N/A**	**09/01/15 04:06**	**150831L01**

Parameter	Result	RL	DF	Qualifiers
Acetone	22	4.8	1.00	
Benzene	36	1.6	1.00	
Benzyl Chloride	ND	7.8	1.00	
Bromodichloromethane	ND	3.4	1.00	
Bromoform	ND	5.2	1.00	
Bromomethane	ND	1.9	1.00	
2-Butanone	8.5	4.4	1.00	
n-Butylbenzene	ND	2.7	1.00	
sec-Butylbenzene	ND	2.7	1.00	
tert-Butylbenzene	ND	2.7	1.00	
Carbon Disulfide	ND	6.2	1.00	
Carbon Tetrachloride	ND	3.1	1.00	
Chlorobenzene	ND	2.3	1.00	
Chloroethane	ND	1.3	1.00	
Chloroform	ND	2.4	1.00	
Chloromethane	ND	1.0	1.00	
Dibromochloromethane	ND	4.3	1.00	
1,2-Dibromoethane	ND	3.8	1.00	
1,2-Dichlorobenzene	ND	3.0	1.00	
1,3-Dichlorobenzene	ND	3.0	1.00	
1,4-Dichlorobenzene	5.0	3.0	1.00	
Dichlorodifluoromethane	2.7	2.5	1.00	
1,1-Dichloroethane	ND	2.0	1.00	
1,2-Dichloroethane	ND	2.0	1.00	
1,1-Dichloroethene	ND	2.0	1.00	
c-1,2-Dichloroethene	ND	2.0	1.00	
t-1,2-Dichloroethene	ND	2.0	1.00	
1,2-Dichloropropane	ND	2.3	1.00	
c-1,3-Dichloropropene	ND	2.3	1.00	
t-1,3-Dichloropropene	ND	4.5	1.00	
Dichlorotetrafluoroethane	ND	14	1.00	
1,1-Difluoroethane	ND	5.4	1.00	
Ethylbenzene	15	2.2	1.00	
4-Ethyltoluene	8.7	2.5	1.00	
Hexachloro-1,3-Butadiene	ND	16	1.00	

RL: Reporting Limit. DF: Dilution Factor. MDL: Method Detection Limit.

Return to Contents

eurofins | Calscience

Analytical Report

Geosyntec Consultants	Date Received:	08/27/15
2100 Main Street, Suite 150	Work Order:	15-08-1921
Huntington Beach, CA 92648-2460	Preparation:	N/A
	Method:	EPA TO-15
	Units:	ug/m3
Project: Pacoima / HR1507-02		Page 2 of 8

Parameter	Result	RL	DF	Qualifiers
2-Hexanone	ND	6.1	1.00	
Isopropanol	ND	12	1.00	
Methyl-t-Butyl Ether (MTBE)	ND	7.2	1.00	
Methylene Chloride	ND	17	1.00	
4-Methyl-2-Pentanone	ND	6.1	1.00	
Styrene	ND	6.4	1.00	
1,1,2,2-Tetrachloroethane	ND	6.9	1.00	
Tetrachloroethene	47	3.4	1.00	
Toluene	200	1.9	1.00	
1,2,4-Trichlorobenzene	ND	15	1.00	
1,1,1-Trichloroethane	ND	2.7	1.00	
1,1,2-Trichloroethane	ND	2.7	1.00	
Trichloroethene	ND	2.7	1.00	
Trichlorofluoromethane	ND	5.6	1.00	
1,1,2-Trichloro-1,2,2-Trifluoroethane	ND	11	1.00	
1,2,4-Trimethylbenzene	23	7.4	1.00	
1,3,5-Trimethylbenzene	7.9	2.5	1.00	
Vinyl Acetate	ND	7.0	1.00	
Vinyl Chloride	ND	1.3	1.00	
o-Xylene	26	2.2	1.00	
p/m-Xylene	100	8.7	1.00	

Surrogate	Rec. (%)	Control Limits	Qualifiers
1,4-Bromofluorobenzene	109	68-134	
1,2-Dichloroethane-d4	114	67-133	
Toluene-d8	106	70-130	

Return to Contents

RL: Reporting Limit. DF: Dilution Factor. MDL: Method Detection Limit.

eurofins | Calscience

Analytical Report

Geosyntec Consultants		Date Received:	08/27/15
2100 Main Street, Suite 150		Work Order:	15-08-1921
Huntington Beach, CA 92648-2460		Preparation:	N/A
		Method:	EPA TO-15
		Units:	ug/m3
Project: Pacoima / HR1507-02			Page 3 of 8

Client Sample Number	Lab Sample Number	Date/Time Collected	Matrix	Instrument	Date Prepared	Date/Time Analyzed	QC Batch ID
SV-7	**15-08-1921-2-A**	**08/26/15 14:45**	**Air**	**GC/MS II**	**N/A**	**08/30/15 10:47**	**150829L03**

Parameter	Result	RL	DF	Qualifiers
Acetone	14	4.8	1.00	
Benzene	ND	1.6	1.00	
Benzyl Chloride	ND	7.8	1.00	
Bromodichloromethane	ND	3.4	1.00	
Bromoform	ND	5.2	1.00	
Bromomethane	ND	1.9	1.00	
2-Butanone	7.7	4.4	1.00	
n-Butylbenzene	ND	2.7	1.00	
sec-Butylbenzene	ND	2.7	1.00	
tert-Butylbenzene	ND	2.7	1.00	
Carbon Disulfide	ND	6.2	1.00	
Carbon Tetrachloride	ND	3.1	1.00	
Chlorobenzene	ND	2.3	1.00	
Chloroethane	ND	1.3	1.00	
Chloroform	ND	2.4	1.00	
Chloromethane	ND	1.0	1.00	
Dibromochloromethane	ND	4.3	1.00	
1,2-Dibromoethane	ND	3.8	1.00	
1,2-Dichlorobenzene	ND	3.0	1.00	
1,3-Dichlorobenzene	ND	3.0	1.00	
1,4-Dichlorobenzene	7.1	3.0	1.00	
Dichlorodifluoromethane	ND	2.5	1.00	
1,1-Dichloroethane	ND	2.0	1.00	
1,2-Dichloroethane	ND	2.0	1.00	
1,1-Dichloroethene	ND	2.0	1.00	
c-1,2-Dichloroethene	ND	2.0	1.00	
t-1,2-Dichloroethene	ND	2.0	1.00	
1,2-Dichloropropane	ND	2.3	1.00	
c-1,3-Dichloropropene	ND	2.3	1.00	
t-1,3-Dichloropropene	ND	4.5	1.00	
Dichlorotetrafluoroethane	ND	14	1.00	
1,1-Difluoroethane	ND	5.4	1.00	
Ethylbenzene	ND	2.2	1.00	
4-Ethyltoluene	ND	2.5	1.00	
Hexachloro-1,3-Butadiene	ND	16	1.00	

RL: Reporting Limit. DF: Dilution Factor. MDL: Method Detection Limit.

Return to Contents

eurofins | Calscience

Analytical Report

Geosyntec Consultants	Date Received:	08/27/15
2100 Main Street, Suite 150	Work Order:	15-08-1921
Huntington Beach, CA 92648-2460	Preparation:	N/A
	Method:	EPA TO-15
	Units:	ug/m3
Project: Pacoima / HR1507-02		Page 4 of 8

Parameter	Result	RL	DF	Qualifiers
2-Hexanone	ND	6.1	1.00	
Isopropanol	ND	12	1.00	
Methyl-t-Butyl Ether (MTBE)	ND	7.2	1.00	
Methylene Chloride	ND	17	1.00	
4-Methyl-2-Pentanone	ND	6.1	1.00	
Styrene	ND	6.4	1.00	
1,1,2,2-Tetrachloroethane	ND	6.9	1.00	
Tetrachloroethene	21	3.4	1.00	
Toluene	ND	1.9	1.00	
1,2,4-Trichlorobenzene	ND	15	1.00	
1,1,1-Trichloroethane	ND	2.7	1.00	
1,1,2-Trichloroethane	ND	2.7	1.00	
Trichloroethene	ND	2.7	1.00	
Trichlorofluoromethane	ND	5.6	1.00	
1,1,2-Trichloro-1,2,2-Trifluoroethane	ND	11	1.00	
1,2,4-Trimethylbenzene	ND	7.4	1.00	
1,3,5-Trimethylbenzene	ND	2.5	1.00	
Vinyl Acetate	ND	7.0	1.00	
Vinyl Chloride	ND	1.3	1.00	
o-Xylene	ND	2.2	1.00	
p/m-Xylene	ND	8.7	1.00	

Surrogate	Rec. (%)	Control Limits	Qualifiers
1,4-Bromofluorobenzene	97	68-134	
1,2-Dichloroethane-d4	97	67-133	
Toluene-d8	106	70-130	

Return to Contents

RL: Reporting Limit. DF: Dilution Factor. MDL: Method Detection Limit.

eurofins | Calscience

Analytical Report

Geosyntec Consultants		Date Received:	08/27/15
2100 Main Street, Suite 150		Work Order:	15-08-1921
Huntington Beach, CA 92648-2460		Preparation:	N/A
		Method:	EPA TO-15
		Units:	ug/m3
Project: Pacoima / HR1507-02			Page 5 of 8

Client Sample Number	Lab Sample Number	Date/Time Collected	Matrix	Instrument	Date Prepared	Date/Time Analyzed	QC Batch ID
Method Blank	**095-01-021-15890**	**N/A**	**Air**	**GC/MS II**	**N/A**	**08/29/15 20:20**	**150829L03**

Parameter	Result	RL	DF	Qualifiers
Acetone	ND	4.8	1.00	
Benzene	ND	1.6	1.00	
Benzyl Chloride	ND	7.8	1.00	
Bromodichloromethane	ND	3.4	1.00	
Bromoform	ND	5.2	1.00	
Bromomethane	ND	1.9	1.00	
2-Butanone	ND	4.4	1.00	
n-Butylbenzene	ND	2.7	1.00	
sec-Butylbenzene	ND	2.7	1.00	
tert-Butylbenzene	ND	2.7	1.00	
Carbon Disulfide	ND	6.2	1.00	
Carbon Tetrachloride	ND	3.1	1.00	
Chlorobenzene	ND	2.3	1.00	
Chloroethane	ND	1.3	1.00	
Chloroform	ND	2.4	1.00	
Chloromethane	ND	1.0	1.00	
Dibromochloromethane	ND	4.3	1.00	
1,2-Dibromoethane	ND	3.8	1.00	
1,2-Dichlorobenzene	ND	3.0	1.00	
1,3-Dichlorobenzene	ND	3.0	1.00	
1,4-Dichlorobenzene	ND	3.0	1.00	
Dichlorodifluoromethane	ND	2.5	1.00	
1,1-Dichloroethane	ND	2.0	1.00	
1,2-Dichloroethane	ND	2.0	1.00	
1,1-Dichloroethene	ND	2.0	1.00	
c-1,2-Dichloroethene	ND	2.0	1.00	
t-1,2-Dichloroethene	ND	2.0	1.00	
1,2-Dichloropropane	ND	2.3	1.00	
c-1,3-Dichloropropene	ND	2.3	1.00	
t-1,3-Dichloropropene	ND	4.5	1.00	
Dichlorotetrafluoroethane	ND	14	1.00	
1,1-Difluoroethane	ND	5.4	1.00	
Ethylbenzene	ND	2.2	1.00	
4-Ethyltoluene	ND	2.5	1.00	
Hexachloro-1,3-Butadiene	ND	16	1.00	

RL: Reporting Limit. DF: Dilution Factor. MDL: Method Detection Limit.

Return to Contents

eurofins | Calscience

Analytical Report

Geosyntec Consultants	Date Received:	08/27/15
2100 Main Street, Suite 150	Work Order:	15-08-1921
Huntington Beach, CA 92648-2460	Preparation:	N/A
	Method:	EPA TO-15
	Units:	ug/m3
Project: Pacoima / HR1507-02		Page 6 of 8

Parameter	Result	RL	DF	Qualifiers
2-Hexanone	ND	6.1	1.00	
Isopropanol	ND	12	1.00	
Methyl-t-Butyl Ether (MTBE)	ND	7.2	1.00	
Methylene Chloride	ND	17	1.00	
4-Methyl-2-Pentanone	ND	6.1	1.00	
Styrene	ND	6.4	1.00	
1,1,2,2-Tetrachloroethane	ND	6.9	1.00	
Tetrachloroethene	ND	3.4	1.00	
Toluene	ND	1.9	1.00	
1,2,4-Trichlorobenzene	ND	15	1.00	
1,1,1-Trichloroethane	ND	2.7	1.00	
1,1,2-Trichloroethane	ND	2.7	1.00	
Trichloroethene	ND	2.7	1.00	
Trichlorofluoromethane	ND	5.6	1.00	
1,1,2-Trichloro-1,2,2-Trifluoroethane	ND	11	1.00	
1,2,4-Trimethylbenzene	ND	7.4	1.00	
1,3,5-Trimethylbenzene	ND	2.5	1.00	
Vinyl Acetate	ND	7.0	1.00	
Vinyl Chloride	ND	1.3	1.00	
o-Xylene	ND	2.2	1.00	
p/m-Xylene	ND	8.7	1.00	

Surrogate	Rec. (%)	Control Limits	Qualifiers
1,4-Bromofluorobenzene	100	68-134	
1,2-Dichloroethane-d4	102	67-133	
Toluene-d8	109	70-130	

Return to Contents

RL: Reporting Limit. DF: Dilution Factor. MDL: Method Detection Limit.

eurofins | Calscience

Analytical Report

Geosyntec Consultants		Date Received:	08/27/15
2100 Main Street, Suite 150		Work Order:	15-08-1921
Huntington Beach, CA 92648-2460		Preparation:	N/A
		Method:	EPA TO-15
		Units:	ug/m3
Project: Pacoima / HR1507-02			Page 7 of 8

Client Sample Number	Lab Sample Number	Date/Time Collected	Matrix	Instrument	Date Prepared	Date/Time Analyzed	QC Batch ID
Method Blank	**095-01-021-15901**	**N/A**	**Air**	**GC/MS OOO**	**N/A**	**08/31/15 16:20**	**150831L01**

Parameter	Result	RL	DF	Qualifiers
Acetone	ND	4.8	1.00	
Benzene	ND	1.6	1.00	
Benzyl Chloride	ND	7.8	1.00	
Bromodichloromethane	ND	3.4	1.00	
Bromoform	ND	5.2	1.00	
Bromomethane	ND	1.9	1.00	
2-Butanone	ND	4.4	1.00	
n-Butylbenzene	ND	2.7	1.00	
sec-Butylbenzene	ND	2.7	1.00	
tert-Butylbenzene	ND	2.7	1.00	
Carbon Disulfide	ND	6.2	1.00	
Carbon Tetrachloride	ND	3.1	1.00	
Chlorobenzene	ND	2.3	1.00	
Chloroethane	ND	1.3	1.00	
Chloroform	ND	2.4	1.00	
Chloromethane	ND	1.0	1.00	
Dibromochloromethane	ND	4.3	1.00	
1,2-Dibromoethane	ND	3.8	1.00	
1,2-Dichlorobenzene	ND	3.0	1.00	
1,3-Dichlorobenzene	ND	3.0	1.00	
1,4-Dichlorobenzene	ND	3.0	1.00	
Dichlorodifluoromethane	ND	2.5	1.00	
1,1-Dichloroethane	ND	2.0	1.00	
1,2-Dichloroethane	ND	2.0	1.00	
1,1-Dichloroethene	ND	2.0	1.00	
c-1,2-Dichloroethene	ND	2.0	1.00	
t-1,2-Dichloroethene	ND	2.0	1.00	
1,2-Dichloropropane	ND	2.3	1.00	
c-1,3-Dichloropropene	ND	2.3	1.00	
t-1,3-Dichloropropene	ND	4.5	1.00	
Dichlorotetrafluoroethane	ND	14	1.00	
1,1-Difluoroethane	ND	5.4	1.00	
Ethylbenzene	ND	2.2	1.00	
4-Ethyltoluene	ND	2.5	1.00	
Hexachloro-1,3-Butadiene	ND	16	1.00	

RL: Reporting Limit. DF: Dilution Factor. MDL: Method Detection Limit.

Return to Contents

eurofins | Calscience

Analytical Report

Geosyntec Consultants	Date Received:	08/27/15
2100 Main Street, Suite 150	Work Order:	15-08-1921
Huntington Beach, CA 92648-2460	Preparation:	N/A
	Method:	EPA TO-15
	Units:	ug/m3
Project: Pacoima / HR1507-02		Page 8 of 8

Parameter	Result	RL	DF	Qualifiers
2-Hexanone	ND	6.1	1.00	
Isopropanol	ND	12	1.00	
Methyl-t-Butyl Ether (MTBE)	ND	7.2	1.00	
Methylene Chloride	ND	17	1.00	
4-Methyl-2-Pentanone	ND	6.1	1.00	
Styrene	ND	6.4	1.00	
1,1,2,2-Tetrachloroethane	ND	6.9	1.00	
Tetrachloroethene	ND	3.4	1.00	
Toluene	ND	1.9	1.00	
1,2,4-Trichlorobenzene	ND	15	1.00	
1,1,1-Trichloroethane	ND	2.7	1.00	
1,1,2-Trichloroethane	ND	2.7	1.00	
Trichloroethene	ND	2.7	1.00	
Trichlorofluoromethane	ND	5.6	1.00	
1,1,2-Trichloro-1,2,2-Trifluoroethane	ND	11	1.00	
1,2,4-Trimethylbenzene	ND	7.4	1.00	
1,3,5-Trimethylbenzene	ND	2.5	1.00	
Vinyl Acetate	ND	7.0	1.00	
Vinyl Chloride	ND	1.3	1.00	
o-Xylene	ND	2.2	1.00	
p/m-Xylene	ND	8.7	1.00	

Surrogate	Rec. (%)	Control Limits	Qualifiers
1,4-Bromofluorobenzene	102	68-134	
1,2-Dichloroethane-d4	115	67-133	
Toluene-d8	100	70-130	

Return to Contents

RL: Reporting Limit. DF: Dilution Factor. MDL: Method Detection Limit.

eurofins | Calscience

Quality Control - LCS/LCSD

Geosyntec Consultants		Date Received:	08/27/15
2100 Main Street, Suite 150		Work Order:	15-08-1921
Huntington Beach, CA 92648-2460		Preparation:	N/A
		Method:	ASTM D-1946
Project: Pacoima / HR1507-02			Page 1 of 5

Quality Control Sample ID	Type	Matrix	Instrument	Date Prepared	Date Analyzed	LCS/LCSD Batch Number
099-16-444-262	**LCS**	**Air**	**GC 65**	**N/A**	**08/27/15 09:50**	**150827L01**
099-16-444-262	**LCSD**	**Air**	**GC 65**	**N/A**	**08/27/15 10:08**	**150827L01**

Parameter	Spike Added	LCS Conc.	LCS %Rec.	LCSD Conc.	LCSD %Rec.	%Rec. CL	RPD	RPD CL	Qualifiers
Methane	4.500	4.263	95	4.267	95	80-120	0	0-30	
Carbon Dioxide	15.00	14.72	98	14.99	100	80-120	2	0-30	
Carbon Monoxide	6.990	6.375	91	6.369	91	80-120	0	0-30	
Oxygen (+ Argon)	4.010	4.226	105	4.200	105	80-120	1	0-30	
Nitrogen	69.50	68.76	99	68.63	99	80-120	0	0-30	

Return to Contents

RPD: Relative Percent Difference. CL: Control Limits

eurofins | Calscience

Quality Control - LCS/LCSD

Geosyntec Consultants		Date Received:	08/27/15
2100 Main Street, Suite 150		Work Order:	15-08-1921
Huntington Beach, CA 92648-2460		Preparation:	N/A
		Method:	EPA TO-15
Project: Pacoima / HR1507-02			Page 2 of 5

Quality Control Sample ID	Type	Matrix	Instrument	Date Prepared	Date Analyzed	LCS/LCSD Batch Number
095-01-021-15890	**LCS**	**Air**	**GC/MS II**	**N/A**	**08/29/15 15:46**	**150829L03**
095-01-021-15890	**LCSD**	**Air**	**GC/MS II**	**N/A**	**08/29/15 16:36**	**150829L03**

Parameter	Spike Added	LCS Conc.	LCS %Rec.	LCSD Conc.	LCSD %Rec.	%Rec. CL	ME CL	RPD	RPD CL	Qualifiers
Acetone	59.39	58.73	99	57.15	96	67-133	56-144	3	0-30	
Benzene	79.87	94.91	119	94.58	118	70-130	60-140	0	0-30	
Benzyl Chloride	129.4	123.9	96	122.1	94	38-158	18-178	1	0-30	
Bromodichloromethane	167.5	167.4	100	169.0	101	70-130	60-140	1	0-30	
Bromoform	258.4	225.3	87	223.7	87	63-147	49-161	1	0-30	
Bromomethane	97.08	101.0	104	99.88	103	70-139	58-150	1	0-30	
2-Butanone	73.73	87.58	119	85.41	116	66-132	55-143	3	0-30	
n-Butylbenzene	137.2	128.4	94	128.1	93	50-150	33-167	0	0-30	
sec-Butylbenzene	137.2	126.8	92	127.0	93	50-150	33-167	0	0-30	
tert-Butylbenzene	137.2	119.4	87	119.9	87	50-150	33-167	0	0-30	
Carbon Disulfide	77.85	88.53	114	87.25	112	68-146	55-159	1	0-30	
Carbon Tetrachloride	157.3	129.7	82	130.6	83	70-136	59-147	1	0-30	
Chlorobenzene	115.1	115.0	100	113.6	99	70-130	60-140	1	0-30	
Chloroethane	65.96	71.83	109	71.30	108	65-149	51-163	1	0-30	
Chloroform	122.1	115.2	94	115.0	94	70-130	60-140	0	0-30	
Chloromethane	51.63	56.00	108	54.88	106	69-141	57-153	2	0-30	
Dibromochloromethane	213.0	185.7	87	186.2	87	70-138	59-149	0	0-30	
1,2-Dibromoethane	192.1	202.2	105	201.9	105	70-133	60-144	0	0-30	
1,2-Dichlorobenzene	150.3	133.5	89	131.7	88	48-138	33-153	1	0-30	
1,3-Dichlorobenzene	150.3	134.8	90	133.5	89	56-134	43-147	1	0-30	
1,4-Dichlorobenzene	150.3	135.5	90	134.8	90	52-136	38-150	1	0-30	
Dichlorodifluoromethane	123.6	116.7	94	116.1	94	67-139	55-151	0	0-30	
1,1-Dichloroethane	101.2	111.0	110	109.9	109	70-130	60-140	1	0-30	
1,2-Dichloroethane	101.2	97.33	96	97.53	96	70-132	60-142	0	0-30	
1,1-Dichloroethene	99.12	95.27	96	95.38	96	70-135	59-146	0	0-30	
c-1,2-Dichloroethene	99.12	109.0	110	107.5	108	70-130	60-140	1	0-30	
t-1,2-Dichloroethene	99.12	111.4	112	108.5	109	70-130	60-140	3	0-30	
1,2-Dichloropropane	115.5	137.0	119	136.9	118	70-130	60-140	0	0-30	
c-1,3-Dichloropropene	113.5	143.9	127	143.1	126	70-130	60-140	1	0-30	
t-1,3-Dichloropropene	113.5	144.8	128	144.7	128	70-147	57-160	0	0-30	
Dichlorotetrafluoroethane	174.8	148.2	85	150.4	86	51-135	37-149	1	0-30	
1,1-Difluoroethane	67.54	82.49	122	78.77	117	70-131	60-141	5	0-30	
Ethylbenzene	108.6	117.8	109	117.9	109	70-130	60-140	0	0-30	
4-Ethyltoluene	122.9	125.2	102	125.4	102	68-130	58-140	0	0-30	
Hexachloro-1,3-Butadiene	266.6	198.1	74	191.9	72	44-146	27-163	3	0-30	
2-Hexanone	102.4	124.3	121	123.4	120	70-136	59-147	1	0-30	

RPD: Relative Percent Difference. CL: Control Limits

Return to Contents

eurofins | Calscience

Quality Control - LCS/LCSD

Geosyntec Consultants		Date Received:	08/27/15
2100 Main Street, Suite 150		Work Order:	15-08-1921
Huntington Beach, CA 92648-2460		Preparation:	N/A
		Method:	EPA TO-15
Project: Pacoima / HR1507-02			Page 3 of 5

Parameter	Spike Added	LCS Conc.	LCS %Rec.	LCSD Conc.	LCSD %Rec.	%Rec. CL	ME CL	RPD	RPD CL	Qualifiers
Isopropanol	61.45	56.71	92	56.28	92	57-135	44-148	1	0-30	
Methyl-t-Butyl Ether (MTBE)	90.13	106.7	118	106.3	118	68-130	58-140	0	0-30	
Methylene Chloride	86.84	82.77	95	80.93	93	69-130	59-140	2	0-30	
4-Methyl-2-Pentanone	102.4	124.3	121	123.1	120	70-130	60-140	1	0-30	
Styrene	106.5	111.8	105	110.9	104	65-131	54-142	1	0-30	
1,1,2,2-Tetrachloroethane	171.6	176.5	103	175.2	102	63-130	52-141	1	0-30	
Tetrachloroethene	169.6	150.2	89	148.6	88	70-130	60-140	1	0-30	
Toluene	94.21	102.8	109	102.7	109	70-130	60-140	0	0-30	
1,2,4-Trichlorobenzene	185.5	165.5	89	155.9	84	31-151	11-171	6	0-30	
1,1,1-Trichloroethane	136.4	122.4	90	124.5	91	70-130	60-140	2	0-30	
1,1,2-Trichloroethane	136.4	153.0	112	152.4	112	70-130	60-140	0	0-30	
Trichloroethene	134.3	137.4	102	138.0	103	70-130	60-140	0	0-30	
Trichlorofluoromethane	140.5	140.2	100	139.7	99	63-141	50-154	0	0-30	
1,1,2-Trichloro-1,2,2-Trifluoroethane	191.6	183.1	96	180.6	94	70-136	59-147	1	0-30	
1,2,4-Trimethylbenzene	122.9	115.2	94	116.2	95	60-132	48-144	1	0-30	
1,3,5-Trimethylbenzene	122.9	120.8	98	121.0	98	62-130	51-141	0	0-30	
Vinyl Acetate	88.03	92.34	105	89.96	102	58-130	46-142	3	0-30	
Vinyl Chloride	63.91	66.26	104	65.87	103	70-134	59-145	1	0-30	
o-Xylene	108.6	108.2	100	108.1	100	69-130	59-140	0	0-30	
p/m-Xylene	217.1	214.3	99	215.9	99	70-132	60-142	1	0-30	

Total number of LCS compounds: 56
Total number of ME compounds: 0
Total number of ME compounds allowed: 3
LCS ME CL validation result: Pass

Return to Contents

RPD: Relative Percent Difference. CL: Control Limits

eurofins | Calscience

Quality Control - LCS/LCSD

Geosyntec Consultants		Date Received:	08/27/15
2100 Main Street, Suite 150		Work Order:	15-08-1921
Huntington Beach, CA 92648-2460		Preparation:	N/A
		Method:	EPA TO-15
Project: Pacoima / HR1507-02			Page 4 of 5

Quality Control Sample ID	Type	Matrix	Instrument	Date Prepared	Date Analyzed	LCS/LCSD Batch Number
095-01-021-15901	**LCS**	**Air**	**GC/MS OOO**	**N/A**	**08/31/15 11:54**	**150831L01**
095-01-021-15901	**LCSD**	**Air**	**GC/MS OOO**	**N/A**	**08/31/15 13:04**	**150831L01**

Parameter	Spike Added	LCS Conc.	LCS %Rec.	LCSD Conc.	LCSD %Rec.	%Rec. CL	ME CL	RPD	RPD CL	Qualifiers
Acetone	59.39	76.23	128	75.09	126	67-133	56-144	2	0-30	
Benzene	79.87	81.39	102	80.80	101	70-130	60-140	1	0-30	
Benzyl Chloride	129.4	155.4	120	153.7	119	38-158	18-178	1	0-30	
Bromodichloromethane	167.5	184.8	110	184.7	110	70-130	60-140	0	0-30	
Bromoform	258.4	285.4	110	283.5	110	63-147	49-161	1	0-30	
Bromomethane	97.08	121.8	125	120.2	124	70-139	58-150	1	0-30	
2-Butanone	73.73	75.61	103	76.07	103	66-132	55-143	1	0-30	
n-Butylbenzene	137.2	160.7	117	157.8	115	50-150	33-167	2	0-30	
sec-Butylbenzene	137.2	151.5	110	149.9	109	50-150	33-167	1	0-30	
tert-Butylbenzene	137.2	157.8	115	156.8	114	50-150	33-167	1	0-30	
Carbon Disulfide	77.85	108.5	139	104.2	134	68-146	55-159	4	0-30	
Carbon Tetrachloride	157.3	169.2	108	166.5	106	70-136	59-147	2	0-30	
Chlorobenzene	115.1	118.7	103	117.6	102	70-130	60-140	1	0-30	
Chloroethane	65.96	83.01	126	81.71	124	65-149	51-163	2	0-30	
Chloroform	122.1	127.6	105	126.7	104	70-130	60-140	1	0-30	
Chloromethane	51.63	68.49	133	68.19	132	69-141	57-153	0	0-30	
Dibromochloromethane	213.0	232.2	109	232.5	109	70-138	59-149	0	0-30	
1,2-Dibromoethane	192.1	202.3	105	200.6	104	70-133	60-144	1	0-30	
1,2-Dichlorobenzene	150.3	161.7	108	159.1	106	48-138	33-153	2	0-30	
1,3-Dichlorobenzene	150.3	168.4	112	164.7	110	56-134	43-147	2	0-30	
1,4-Dichlorobenzene	150.3	166.0	110	165.6	110	52-136	38-150	0	0-30	
Dichlorodifluoromethane	123.6	146.3	118	145.0	117	67-139	55-151	1	0-30	
1,1-Dichloroethane	101.2	100.7	100	99.94	99	70-130	60-140	1	0-30	
1,2-Dichloroethane	101.2	112.8	111	113.0	112	70-132	60-142	0	0-30	
1,1-Dichloroethene	99.12	114.6	116	112.5	113	70-135	59-146	2	0-30	
c-1,2-Dichloroethene	99.12	93.82	95	93.23	94	70-130	60-140	1	0-30	
t-1,2-Dichloroethene	99.12	99.82	101	98.11	99	70-130	60-140	2	0-30	
1,2-Dichloropropane	115.5	113.5	98	113.7	98	70-130	60-140	0	0-30	
c-1,3-Dichloropropene	113.5	123.7	109	123.3	109	70-130	60-140	0	0-30	
t-1,3-Dichloropropene	113.5	131.5	116	130.6	115	70-147	57-160	1	0-30	
Dichlorotetrafluoroethane	174.8	193.8	111	192.6	110	51-135	37-149	1	0-30	
1,1-Difluoroethane	67.54	77.45	115	77.29	114	70-131	60-141	0	0-30	
Ethylbenzene	108.6	118.0	109	116.4	107	70-130	60-140	1	0-30	
4-Ethyltoluene	122.9	137.3	112	136.6	111	68-130	58-140	1	0-30	
Hexachloro-1,3-Butadiene	266.6	272.6	102	275.2	103	44-146	27-163	1	0-30	
2-Hexanone	102.4	104.5	102	103.2	101	70-136	59-147	1	0-30	

RPD: Relative Percent Difference. CL: Control Limits

Return to Contents

eurofins | Calscience

Quality Control - LCS/LCSD

Geosyntec Consultants		Date Received:	08/27/15
2100 Main Street, Suite 150		Work Order:	15-08-1921
Huntington Beach, CA 92648-2460		Preparation:	N/A
		Method:	EPA TO-15
Project: Pacoima / HR1507-02			Page 5 of 5

Parameter	Spike Added	LCS Conc.	LCS %Rec.	LCSD Conc.	LCSD %Rec.	%Rec. CL	ME CL	RPD	RPD CL	Qualifiers
Isopropanol	61.45	74.70	122	75.20	122	57-135	44-148	1	0-30	
Methyl-t-Butyl Ether (MTBE)	90.13	94.47	105	94.41	105	68-130	58-140	0	0-30	
Methylene Chloride	86.84	94.25	109	92.25	106	69-130	59-140	2	0-30	
4-Methyl-2-Pentanone	102.4	104.3	102	102.1	100	70-130	60-140	2	0-30	
Styrene	106.5	112.3	105	110.7	104	65-131	54-142	1	0-30	
1,1,2,2-Tetrachloroethane	171.6	179.4	105	176.7	103	63-130	52-141	2	0-30	
Tetrachloroethene	169.6	170.9	101	171.4	101	70-130	60-140	0	0-30	
Toluene	94.21	105.6	112	105.9	112	70-130	60-140	0	0-30	
1,2,4-Trichlorobenzene	185.5	202.3	109	203.5	110	31-151	11-171	1	0-30	
1,1,1-Trichloroethane	136.4	141.1	103	141.2	104	70-130	60-140	0	0-30	
1,1,2-Trichloroethane	136.4	144.4	106	142.3	104	70-130	60-140	1	0-30	
Trichloroethene	134.3	137.9	103	137.7	102	70-130	60-140	0	0-30	
Trichlorofluoromethane	140.5	166.4	119	162.6	116	63-141	50-154	2	0-30	
1,1,2-Trichloro-1,2,2-Trifluoroethane	191.6	224.6	117	222.5	116	70-136	59-147	1	0-30	
1,2,4-Trimethylbenzene	122.9	155.9	127	153.8	125	60-132	48-144	1	0-30	
1,3,5-Trimethylbenzene	122.9	136.4	111	135.0	110	62-130	51-141	1	0-30	
Vinyl Acetate	88.03	72.84	83	73.41	83	58-130	46-142	1	0-30	
Vinyl Chloride	63.91	82.05	128	81.37	127	70-134	59-145	1	0-30	
o-Xylene	108.6	120.2	111	117.2	108	69-130	59-140	3	0-30	
p/m-Xylene	217.1	250.8	116	248.6	114	70-132	60-142	1	0-30	

Total number of LCS compounds: 56
Total number of ME compounds: 0
Total number of ME compounds allowed: 3
LCS ME CL validation result: Pass

RPD: Relative Percent Difference. CL: Control Limits

Return to Contents

eurofins | Calscience

Summa Canister Vacuum Summary

Work Order: 15-08-1921

Sample Name	Vacuum Out	Vacuum In	Equipment	Description
SV-1	-29.50 in Hg	-7.20 in Hg	D732	Summa Canister 6L
SV-7	-29.50 in Hg	-9.20 in Hg	D759	Summa Canister 6L

Return to Contents

eurofins | Calscience

Sample Analysis Summary Report

Work Order: 15-08-1921

Method	Extraction	Chemist ID	Instrument	Analytical Location
ASTM D-1946	N/A	982	GC 65	2
EPA TO-15	N/A	866	GC/MS II	2
EPA TO-15	N/A	953	GC/MS OOO	2

Return to Contents

eurofins | Calscience

Glossary of Terms and Qualifiers

Work Order: 15-08-1921 Page 1 of 1

Qualifiers	Definition
*	See applicable analysis comment.
<	Less than the indicated value.
>	Greater than the indicated value.
1	Surrogate compound recovery was out of control due to a required sample dilution. Therefore, the sample data was reported without further clarification.
2	Surrogate compound recovery was out of control due to matrix interference. The associated method blank surrogate spike compound was in control and, therefore, the sample data was reported without further clarification.
3	Recovery of the Matrix Spike (MS) or Matrix Spike Duplicate (MSD) compound was out of control due to suspected matrix interference. The associated LCS recovery was in control.
4	The MS/MSD RPD was out of control due to suspected matrix interference.
5	The PDS/PDSD or PES/PESD associated with this batch of samples was out of control due to suspected matrix interference.
6	Surrogate recovery below the acceptance limit.
7	Surrogate recovery above the acceptance limit.
B	Analyte was present in the associated method blank.
BU	Sample analyzed after holding time expired.
BV	Sample received after holding time expired.
CI	See case narrative.
E	Concentration exceeds the calibration range.
ET	Sample was extracted past end of recommended max. holding time.
HD	The chromatographic pattern was inconsistent with the profile of the reference fuel standard.
HDH	The sample chromatographic pattern for TPH matches the chromatographic pattern of the specified standard but heavier hydrocarbons were also present (or detected).
HDL	The sample chromatographic pattern for TPH matches the chromatographic pattern of the specified standard but lighter hydrocarbons were also present (or detected).
J	Analyte was detected at a concentration below the reporting limit and above the laboratory method detection limit. Reported value is estimated.
JA	Analyte positively identified but quantitation is an estimate.
ME	LCS Recovery Percentage is within Marginal Exceedance (ME) Control Limit range (+/- 4 SD from the mean).
ND	Parameter not detected at the indicated reporting limit.
Q	Spike recovery and RPD control limits do not apply resulting from the parameter concentration in the sample exceeding the spike concentration by a factor of four or greater.
SG	The sample extract was subjected to Silica Gel treatment prior to analysis.
X	% Recovery and/or RPD out-of-range.
Z	Analyte presence was not confirmed by second column or GC/MS analysis.

Solid - Unless otherwise indicated, solid sample data is reported on a wet weight basis, not corrected for % moisture. All QC results are reported on a wet weight basis.

Any parameter identified in 40CFR Part 136.3 Table II that is designated as "analyze immediately" with a holding time of <= 15 minutes (40CFR-136.3 Table II, footnote 4), is considered a "field" test and the reported results will be qualified as being received outside of the stated holding time unless received at the laboratory within 15 minutes of the collection time.

A calculated total result (Example: Total Pesticides) is the summation of each component concentration and/or, if "J" flags are reported, estimated concentration. Component concentrations showing not detected (ND) are summed into the calculated total result as zero concentrations.

Return to Contents

eurofins | Calscience

7440 Lincoln Way, Garden Grove, CA 92841-1427 • (714) 895-5494
For courier service / sample drop off information, contact us26_sales@eurofinsus.com or call us.

AIR CHAIN-OF-CUSTODY RECORD

DATE: 8/26/2015
PAGE: 1 OF 1

WO NO. / LAB USE ONLY: 15-08-1921

LABORATORY CLIENT: GEOSYNTEC CONSULTANTS
ADDRESS: 2100 MAIN STREET #150
CITY: HUNTINGTON BEACH STATE: CA ZIP: 92648
TEL: 714-969-0800 E-MAIL: ZAMINI@GEOSYNTEC.COM
TURNAROUND TIME (Rush surcharges may apply to any TAT not "STANDARD"): ☐ SAME DAY ☐ 24 HR ☐ 48 HR ☐ 72 HR ☐ 5 DAYS ☑ STANDARD
EDD: ☐ COELT EDF ☐ OTHER
UNITS:

CLIENT PROJECT NAME / NO.: PACOIMA
P.O. NO.: HR1507-02
PROJECT CONTACT: ZAHRA AMINI
LAB CONTACT OR QUOTE NO.:
PROJECT ADDRESS: 10450 ARLETA AVE
SAMPLER(S): (PRINT) ERIC SMALSTIG
CITY: PACOIMA STATE: CA ZIP: 91331

SPECIAL INSTRUCTIONS:

LAB USE ONLY	SAMPLE ID	FIELD ID / POINT OF COLLECTION	MATRIX: Indoor (I) Soil Vap. (SV) Ambient (A)	SAMPLING EQUIPMENT: Media ID	Canister Size 6L or 1L	Flow Controller ID	START SAMPLING INFORMATION: Date	Time (24 hr clock)	Canister Pressure (in Hg)	STOP SAMPLING INFORMATION: Date	Time (24 hr clock)	Canister Pressure (in Hg)	REQUESTED ANALYSES: *ASTM D-1946 GASES	EPA TO-15 FULL LIST
1	SV-1	SOIL VAPOR #1	SV	D732	6L	A403	8/26/15	13:15	29.5	8/26	13:38	7.5	X	X
2	SV-7	SOIL VAPOR #7	SV	D759	6L	A414	8/26	14:25	29.5	8/26	14:45	9.5	X	X

*w/METHANE

Relinquished by: (Signature)	Received by: (Signature/Affiliation)	Date:	Time:
[signature]	[signature] ECL	8/27/15	1342
Relinquished by: (Signature) [signature]	Received by: (Signature/Affiliation) Danagle ECL	Date: 8/27/15	Time: 15:10
Relinquished by: (Signature)	Received by: (Signature/Affiliation)	Date:	Time:

2014-07-01 Revision

Return to Contents

eurofins | Calscience

WORK ORDER NUMBER: 15-08- 1921

SAMPLE RECEIPT CHECKLIST

COOLER 0 OF 0

CLIENT: GEOSYNTEC

DATE: 08 / 27 / 2015

TEMPERATURE: (Criteria: 0.0°C – 6.0°C, not frozen except sediment/tissue)

Thermometer ID: SC5 (CF:-0.2°C); Temperature (w/o CF): _____°C (w/ CF): _____°C; ☐ Blank ☐ Sample

☐ Sample(s) outside temperature criteria (PM/APM contacted by: _____)

☐ Sample(s) outside temperature criteria but received on ice/chilled on same day of sampling

☐ Sample(s) received at ambient temperature; placed on ice for transport by courier

Ambient Temperature: ☑ Air ☐ Filter Checked by: 678

CUSTODY SEAL:

Cooler	☐ Present and Intact	☐ Present but Not Intact	☐ Not Present	☑ N/A	Checked by: 678
Sample(s)	☐ Present and Intact	☐ Present but Not Intact	☑ Not Present	☐ N/A	Checked by: 836

SAMPLE CONDITION:

	Yes	No	N/A
Chain-of-Custody (COC) document(s) received with samples	☑	☐	☐
COC document(s) received complete	☑	☐	☐
☐ Sampling date ☐ Sampling time ☐ Matrix ☐ Number of containers			
☐ No analysis requested ☐ Not relinquished ☐ No relinquished date ☐ No relinquished time			
Sampler's name indicated on COC	☑	☐	☐
Sample container label(s) consistent with COC	☑	☐	☐
Sample container(s) intact and in good condition	☑	☐	☐
Proper containers for analyses requested	☑	☐	☐
Sufficient volume/mass for analyses requested	☑	☐	☐
Samples received within holding time	☑	☐	☐
Aqueous samples for certain analyses received within 15-minute holding time			
☐ pH ☐ Residual Chlorine ☐ Dissolved Sulfide ☐ Dissolved Oxygen	☐	☐	☑
Proper preservation chemical(s) noted on COC and/or sample container	☐	☐	☑
Unpreserved aqueous sample(s) received for certain analyses			
☐ Volatile Organics ☐ Total Metals ☐ Dissolved Metals			
Container(s) for certain analysis free of headspace	☐	☐	☑
☐ Volatile Organics ☐ Dissolved Gases (RSK-175) ☐ Dissolved Oxygen (SM 4500)			
☐ Carbon Dioxide (SM 4500) ☐ Ferrous Iron (SM 3500) ☐ Hydrogen Sulfide (Hach)			
Tedlar™ bag(s) free of condensation	☐	☐	☑

CONTAINER TYPE: (Trip Blank Lot Number: _____)

Aqueous: ☐ VOA ☐ VOA**h** ☐ VOA**na$_2$** ☐ 100PJ ☐ 100PJ**na$_2$** ☐ 125AGB ☐ 125AGB**h** ☐ 125AGB**p** ☐ 125PB

☐ 125PB**znna** ☐ 250AGB ☐ 250CGB ☐ 250CGB**s** ☐ 250PB ☐ 250PB**n** ☐ 500AGB ☐ 500AGJ ☐ 500AGJ**s**

☐ 500PB ☐ 1AGB ☐ 1AGB**na$_2$** ☐ 1AGB**s** ☐ 1PB ☐ 1PB**na** ☐ _____ ☐ _____ ☐ _____ ☐ _____

Solid: ☐ 4ozCGJ ☑ 8ozCGJ ☐ 16ozCGJ ☐ Sleeve (_____) ☐ EnCores® (_____) ☐ TerraCores® (_____) ☐ _____

Air: ☐ Tedlar™ ☑ Canister ☐ Sorbent Tube ☐ PUF ☐ _____ **Other Matrix** (_____): ☐ _____ ☐ _____

Container: **A** = Amber, **B** = Bottle, **C** = Clear, **E** = Envelope, **G** = Glass, **J** = Jar, **P** = Plastic, and **Z** = Ziploc/Resealable Bag

Preservative: **b** = buffered, **f** = filtered, **h** = HCl, **n** = HNO_3, **na** = NaOH, **na$_2$** = $Na_2S_2O_3$, **p** = H_3PO_4, **s** = H_2SO_4, **u** = ultra-pure, **znna** = $Zn(CH_3CO_2)_2$ + NaOH

Labeled/Checked by: 836

Reviewed by: 689

Return to Contents

eurofins | Calscience

Supplemental Report 1

Additional requested analyses are reported as a stand-alone report.

WORK ORDER NUMBER: 15-08-1921

The difference is service

AIR | SOIL | WATER | MARINE CHEMISTRY

Analytical Report For

Client: Geosyntec Consultants

Client Project Name: Pacoima / HR1507-02

Attention: Zahra Amini
2100 Main Street, Suite 150
Huntington Beach, CA 92648-2460

Approved for release on 09/08/2015 by:
Stephen Nowak
Project Manager

ResultLink

Email your PM

Eurofins Calscience, Inc. (Calscience) certifies that the test results provided in this report meet all NELAC requirements for parameters for which accreditation is required or available. Any exceptions to NELAC requirements are noted in the case narrative. The original report of subcontracted analyses, if any, is attached to this report. The results in this report are limited to the sample(s) tested and any reproduction thereof must be made in its entirety. The client or recipient of this report is specifically prohibited from making material changes to said report and, to the extent that such changes are made, Calscience is not responsible, legally or otherwise. The client or recipient agrees to indemnify Calscience for any defense to any litigation which may arise.

eurofins | Calscience

Contents

Client Project Name: Pacoima / HR1507-02
Work Order Number: 15-08-1921

1 Work Order Narrative. 3

2 Sample Summary. 4

3 Detections Summary. 5

4 Client Sample Data. 6
4.1 ASTM D-1946 (M) Fixed Gases (H2 and/or He) (Air). 6

5 Quality Control Sample Data. 7
5.1 LCS/LCSD. 7

6 Summa Canister Vacuum Summary. 8

7 Sample Analysis Summary. 9

8 Glossary of Terms and Qualifiers. 10

9 Chain-of-Custody/Sample Receipt Form. 11

eurofins | Calscience

Work Order Narrative

Work Order: 15-08-1921 Page 1 of 1

Condition Upon Receipt:

Samples were received under Chain-of-Custody (COC) on 08/27/15. They were assigned to Work Order 15-08-1921.

Unless otherwise noted on the Sample Receiving forms all samples were received in good condition and within the recommended EPA temperature criteria for the methods noted on the COC. The COC and Sample Receiving Documents are integral elements of the analytical report and are presented at the back of the report.

Holding Times:

All samples were analyzed within prescribed holding times (HT) and/or in accordance with the Calscience Sample Acceptance Policy unless otherwise noted in the analytical report and/or comprehensive case narrative, if required.

Any parameter identified in 40CFR Part 136.3 Table II that is designated as "analyze immediately" with a holding time of <= 15 minutes (40CFR-136.3 Table II, footnote 4), is considered a "field" test and the reported results will be qualified as being received outside of the stated holding time unless received at the laboratory within 15 minutes of the collection time.

Quality Control:

All quality control parameters (QC) were within established control limits except where noted in the QC summary forms or described further within this report.

Subcontractor Information:

Unless otherwise noted below (or on the subcontract form), no samples were subcontracted.

Additional Comments:

Air - Sorbent-extracted air methods (EPA TO-4A, EPA TO-10, EPA TO-13A, EPA TO-17): Analytical results are converted from mass/sample basis to mass/volume basis using client-supplied air volumes.

Solid - Unless otherwise indicated, solid sample data is reported on a wet weight basis, not corrected for % moisture. All QC results are always reported on a wet weight basis.

Return to Contents

eurofins | Calscience

Sample Summary

Client:	Geosyntec Consultants 2100 Main Street, Suite 150 Huntington Beach, CA 92648-2460	Work Order:	15-08-1921
		Project Name:	Pacoima / HR1507-02
		PO Number:	
		Date/Time Received:	08/27/15 15:10
		Number of Containers:	2
Attn:	Zahra Amini		

Sample Identification	Lab Number	Collection Date and Time	Number of Containers	Matrix
SV-1	15-08-1921-1	08/26/15 13:38	1	Air
SV-7	15-08-1921-2	08/26/15 14:45	1	Air

Return to Contents

eurofins | Calscience

Detections Summary

Client:	Geosyntec Consultants 2100 Main Street, Suite 150 Huntington Beach, CA 92648-2460	Work Order: Project Name: Received:	15-08-1921 Pacoima / HR1507-02 08/27/15
Attn:	Zahra Amini		

Client SampleID Analyte	Result	Qualifiers	RL	Units	Method	Extraction
SV-1 (15-08-1921-1)						
Helium	3140		100	ppm (v/v)	ASTM D-1946 (M)	N/A
SV-7 (15-08-1921-2)						
Helium	822		100	ppm (v/v)	ASTM D-1946 (M)	N/A

Subcontracted analyses, if any, are not included in this summary.

Return to Contents

* MDL is shown

eurofins | Calscience

Analytical Report

Geosyntec Consultants		Date Received:	08/27/15
2100 Main Street, Suite 150		Work Order:	15-08-1921
Huntington Beach, CA 92648-2460		Preparation:	N/A
		Method:	ASTM D-1946 (M)
		Units:	ppm (v/v)
Project: Pacoima / HR1507-02			Page 1 of 1

Client Sample Number	Lab Sample Number	Date/Time Collected	Matrix	Instrument	Date Prepared	Date/Time Analyzed	QC Batch ID
SV-1	**15-08-1921-1-A**	**08/26/15 13:38**	**Air**	**GC 55**	**N/A**	**09/04/15 12:11**	**150904L01**

Parameter	Result	RL	DF	Qualifiers
Helium	3140	100	1.00	

Client Sample Number	Lab Sample Number	Date/Time Collected	Matrix	Instrument	Date Prepared	Date/Time Analyzed	QC Batch ID
SV-7	**15-08-1921-2-A**	**08/26/15 14:45**	**Air**	**GC 55**	**N/A**	**09/04/15 12:57**	**150904L01**

Parameter	Result	RL	DF	Qualifiers
Helium	822	100	1.00	

Client Sample Number	Lab Sample Number	Date/Time Collected	Matrix	Instrument	Date Prepared	Date/Time Analyzed	QC Batch ID
Method Blank	**099-12-872-851**	**N/A**	**Air**	**GC 55**	**N/A**	**09/04/15 10:22**	**150904L01**

Parameter	Result	RL	DF	Qualifiers
Helium	ND	100	1.00	

Return to Contents

RL: Reporting Limit. DF: Dilution Factor. MDL: Method Detection Limit.

eurofins | Calscience

Quality Control - LCS/LCSD

Geosyntec Consultants		Date Received:	08/27/15
2100 Main Street, Suite 150		Work Order:	15-08-1921
Huntington Beach, CA 92648-2460		Preparation:	N/A
		Method:	ASTM D-1946 (M)
Project: Pacoima / HR1507-02			Page 1 of 1

Quality Control Sample ID	Type	Matrix	Instrument	Date Prepared	Date Analyzed	LCS/LCSD Batch Number
099-12-872-851	**LCS**	**Air**	**GC 55**	**N/A**	**09/04/15 09:40**	**150904L01**
099-12-872-851	**LCSD**	**Air**	**GC 55**	**N/A**	**09/04/15 10:01**	**150904L01**

Parameter	Spike Added	LCS Conc.	LCS %Rec.	LCSD Conc.	LCSD %Rec.	%Rec. CL	RPD	RPD CL	Qualifiers
Helium	10000	9462	95	9572	96	80-120	1	0-30	

RPD: Relative Percent Difference. CL: Control Limits

Return to Contents

eurofins | Calscience

Summa Canister Vacuum Summary

Work Order: 15-08-1921

Sample Name	Vacuum Out	Vacuum In	Equipment	Description
SV-1	-29.50 in Hg	-7.20 in Hg	D732	Summa Canister 6L
SV-7	-29.50 in Hg	-9.20 in Hg	D759	Summa Canister 6L

Return to Contents

eurofins | Calscience

Sample Analysis Summary Report

Work Order: 15-08-1921

Method	Extraction	Chemist ID	Instrument	Analytical Location
ASTM D-1946 (M)	N/A	929	GC 55	2

Return to Contents

eurofins | Calscience

Glossary of Terms and Qualifiers

Work Order: 15-08-1921 Page 1 of 1

Qualifiers	Definition
*	See applicable analysis comment.
<	Less than the indicated value.
>	Greater than the indicated value.
1	Surrogate compound recovery was out of control due to a required sample dilution. Therefore, the sample data was reported without further clarification.
2	Surrogate compound recovery was out of control due to matrix interference. The associated method blank surrogate spike compound was in control and, therefore, the sample data was reported without further clarification.
3	Recovery of the Matrix Spike (MS) or Matrix Spike Duplicate (MSD) compound was out of control due to suspected matrix interference. The associated LCS recovery was in control.
4	The MS/MSD RPD was out of control due to suspected matrix interference.
5	The PDS/PDSD or PES/PESD associated with this batch of samples was out of control due to suspected matrix interference.
6	Surrogate recovery below the acceptance limit.
7	Surrogate recovery above the acceptance limit.
B	Analyte was present in the associated method blank.
BU	Sample analyzed after holding time expired.
BV	Sample received after holding time expired.
CI	See case narrative.
E	Concentration exceeds the calibration range.
ET	Sample was extracted past end of recommended max. holding time.
HD	The chromatographic pattern was inconsistent with the profile of the reference fuel standard.
HDH	The sample chromatographic pattern for TPH matches the chromatographic pattern of the specified standard but heavier hydrocarbons were also present (or detected).
HDL	The sample chromatographic pattern for TPH matches the chromatographic pattern of the specified standard but lighter hydrocarbons were also present (or detected).
J	Analyte was detected at a concentration below the reporting limit and above the laboratory method detection limit. Reported value is estimated.
JA	Analyte positively identified but quantitation is an estimate.
ME	LCS Recovery Percentage is within Marginal Exceedance (ME) Control Limit range (+/- 4 SD from the mean).
ND	Parameter not detected at the indicated reporting limit.
Q	Spike recovery and RPD control limits do not apply resulting from the parameter concentration in the sample exceeding the spike concentration by a factor of four or greater.
SG	The sample extract was subjected to Silica Gel treatment prior to analysis.
X	% Recovery and/or RPD out-of-range.
Z	Analyte presence was not confirmed by second column or GC/MS analysis.

Solid - Unless otherwise indicated, solid sample data is reported on a wet weight basis, not corrected for % moisture. All QC results are reported on a wet weight basis.

Any parameter identified in 40CFR Part 136.3 Table II that is designated as "analyze immediately" with a holding time of <= 15 minutes (40CFR-136.3 Table II, footnote 4), is considered a "field" test and the reported results will be qualified as being received outside of the stated holding time unless received at the laboratory within 15 minutes of the collection time.

A calculated total result (Example: Total Pesticides) is the summation of each component concentration and/or, if "J" flags are reported, estimated concentration. Component concentrations showing not detected (ND) are summed into the calculated total result as zero concentrations.

Return to Contents

eurofins | Calscience

7440 Lincoln Way, Garden Grove, CA 92841-1427 • (714) 895-5494
For courier service / sample drop off information, contact us26_sales@eurofinsus.com or call us.

AIR CHAIN-OF-CUSTODY RECORD

WO NO. / LAB USE ONLY: **15-08-1921**

DATE: 8/26/2015
PAGE: 1 OF 1

LABORATORY CLIENT: GEOSYNTEC CONSULTANTS
ADDRESS: 2100 MAIN STREET #150
CITY: HUNTINGTON BEACH STATE: CA ZIP: 92648
TEL: 714-969-0800 E-MAIL: ZAMINI@GEOSYNTEC.COM

CLIENT PROJECT NAME / NO.: PACOIMA
P.O. NO.: HR1507-02
PROJECT CONTACT: ZAHRA AMINI
LAB CONTACT OR QUOTE NO.:
PROJECT ADDRESS: 10450 ARLETA AVE
SAMPLER(S): (PRINT) ERIC SMALSTIG
CITY: PACOIMA STATE: CA ZIP: 91331

TURNAROUND TIME (Rush surcharges may apply to any TAT not "STANDARD"):
☐ SAME DAY ☐ 24 HR ☐ 48 HR ☐ 72 HR ☐ 5 DAYS ☑ STANDARD

EDD: ☐ COELT EDF ☐ OTHER
UNITS:

SPECIAL INSTRUCTIONS:

REQUESTED ANALYSES: *w/ METHANE; ASTM D-1946 GASES; EPA TO-15 FULL LIST

LAB USE ONLY	SAMPLE ID	FIELD ID / POINT OF COLLECTION	MATRIX: Indoor (I) Soil Vap. (SV) Ambient (A)	SAMPLING EQUIPMENT: Media ID	Canister Size 6L or 1L	Flow Controller ID	START SAMPLING INFORMATION: Date	Time (24 hr clock)	Canister Pressure (in Hg)	STOP SAMPLING INFORMATION: Date	Time (24 hr clock)	Canister Pressure (in Hg)	*	
1	SV-1	SOIL VAPOR #1	SV	D732	6L	A403	8/26/15	13:15	29.5	8/26	13:38	7.5	X	X
2	SV-7	SOIL VAPOR #7	SV	D759	6L	A414	8/26	14:25	29.5	8/26	14:45	9.5	X	X

Relinquished by: (Signature)	Received by: (Signature/Affiliation)	Date:	Time:
[signature]	[signature] ECL	8/27/15	1342
Relinquished by: (Signature) [signature]	Received by: (Signature/Affiliation) Danagle ECL	Date: 8/27/15	Time: 15:10
Relinquished by: (Signature)	Received by: (Signature/Affiliation)	Date:	Time:

2014-07-01 Revision

Return to Contents

eurofins | Calscience

WORK ORDER NUMBER: 15-08- 1921

SAMPLE RECEIPT CHECKLIST

COOLER 0 OF 0

CLIENT: GEOSYNTEC

DATE: 08 / 27 / 2015

TEMPERATURE: (Criteria: 0.0°C – 6.0°C, not frozen except sediment/tissue)

Thermometer ID: SC5 (CF:-0.2°C); Temperature (w/o CF): _____°C (w/ CF): _____°C; ☐ Blank ☐ Sample

☐ Sample(s) outside temperature criteria (PM/APM contacted by: _____)

☐ Sample(s) outside temperature criteria but received on ice/chilled on same day of sampling

☐ Sample(s) received at ambient temperature; placed on ice for transport by courier

Ambient Temperature: ☑ Air ☐ Filter Checked by: 678

CUSTODY SEAL:

Cooler	☐ Present and Intact	☐ Present but Not Intact	☐ Not Present	☑ N/A	Checked by: 678
Sample(s)	☐ Present and Intact	☐ Present but Not Intact	☑ Not Present	☐ N/A	Checked by: 836

SAMPLE CONDITION:

	Yes	No	N/A
Chain-of-Custody (COC) document(s) received with samples	☑	☐	☐
COC document(s) received complete	☑	☐	☐
☐ Sampling date ☐ Sampling time ☐ Matrix ☐ Number of containers			
☐ No analysis requested ☐ Not relinquished ☐ No relinquished date ☐ No relinquished time			
Sampler's name indicated on COC	☑	☐	☐
Sample container label(s) consistent with COC	☑	☐	☐
Sample container(s) intact and in good condition	☑	☐	☐
Proper containers for analyses requested	☑	☐	☐
Sufficient volume/mass for analyses requested	☑	☐	☐
Samples received within holding time	☑	☐	☐
Aqueous samples for certain analyses received within 15-minute holding time			
☐ pH ☐ Residual Chlorine ☐ Dissolved Sulfide ☐ Dissolved Oxygen	☐	☐	☑
Proper preservation chemical(s) noted on COC and/or sample container	☐	☐	☑
Unpreserved aqueous sample(s) received for certain analyses			
☐ Volatile Organics ☐ Total Metals ☐ Dissolved Metals			
Container(s) for certain analysis free of headspace	☐	☐	☑
☐ Volatile Organics ☐ Dissolved Gases (RSK-175) ☐ Dissolved Oxygen (SM 4500)			
☐ Carbon Dioxide (SM 4500) ☐ Ferrous Iron (SM 3500) ☐ Hydrogen Sulfide (Hach)			
Tedlar™ bag(s) free of condensation	☐	☐	☑

CONTAINER TYPE: (Trip Blank Lot Number: _____)

Aqueous: ☐ VOA ☐ VOA**h** ☐ VOA**na$_2$** ☐ 100PJ ☐ 100PJ**na$_2$** ☐ 125AGB ☐ 125AGB**h** ☐ 125AGB**p** ☐ 125PB

☐ 125PB**znna** ☐ 250AGB ☐ 250CGB ☐ 250CGB**s** ☐ 250PB ☐ 250PB**n** ☐ 500AGB ☐ 500AGJ ☐ 500AGJ**s**

☐ 500PB ☐ 1AGB ☐ 1AGB**na$_2$** ☐ 1AGB**s** ☐ 1PB ☐ 1PB**na** ☐ _____ ☐ _____ ☐ _____ ☐ _____

Solid: ☐ 4ozCGJ ☑ 8ozCGJ ☐ 16ozCGJ ☐ Sleeve (_____) ☐ EnCores® (_____) ☐ TerraCores® (_____) ☐ _____

Air: ☐ Tedlar™ ☑ Canister ☐ Sorbent Tube ☐ PUF ☐ _____ **Other Matrix** (_____): ☐ _____ ☐ _____

Container: **A** = Amber, **B** = Bottle, **C** = Clear, **E** = Envelope, **G** = Glass, **J** = Jar, **P** = Plastic, and **Z** = Ziploc/Resealable Bag

Preservative: **b** = buffered, **f** = filtered, **h** = HCl, **n** = HNO_3, **na** = NaOH, **na$_2$** = $Na_2S_2O_3$, **p** = H_3PO_4, **s** = H_2SO_4, **u** = ultra-pure, **znna** = $Zn(CH_3CO_2)_2$ + NaOH

Labeled/Checked by: 836

Reviewed by: 689

Return to Contents

APPENDIX E

NOISE IMPACT ANALYSIS

NOISE IMPACT ANALYSIS

PACOIMA SPREADING GROUNDS IMPROVEMENT PROJECT

CITY OF LOS ANGELES

LEAD AGENCY:
LOS ANGELES COUNTY FLOOD CONTROL DISTRICT

PREPARED BY:
VISTA ENVIRONMENTAL
1021 DIDRIKSON WAY
LAGUNA BEACH, CALIFORNIA 92651
GREG TONKOVICH, INCE
TELEPHONE (949) 510-5355
FACSIMILE (949) 715-3629

PROJECT NO. 13001

AUGUST 3, 2015

TABLE OF CONTENTS

1.0 Introduction 5

1.1 Purpose of Analysis and Study Objectives 5
1.2 Site Location and Study Area 5
1.3 Proposed Project Description 5
1.4 Standard Noise Regulatory Conditions 6
1.5 Summary of Analysis Results 9
1.6 Mitigation Measures Required for the Proposed Project 9

2.0 Noise Fundamentals 13

2.1 Noise Descriptors 13
2.2 Tone Noise 13
2.3 Noise Propagation 13
2.4 Ground Absorption 14

3.0 Ground-Borne Vibration Fundamentals 15

3.1 Vibration Descriptors 15
3.2 Vibration Perception 15
3.3 Vibration Propagation 15

4.0 Regulatory Setting 16

4.1 Federal Regulations 16
4.2 State Regulations 17
4.3 Local Regulations 20

5.0 Existing Noise Conditions 21

5.1 Noise Measurement Equipment 21
5.2 Noise Measurement Results 21

6.0 Modeling Parameters and Assumptions 24

6.1 Construction Noise 24
6.2 Off-Site Vehicular Noise 25
6.3 Vibration 27

7.0 Impact Analysis 29

7.1 CEQA Thresholds of Significance 29
7.2 Generation of Noise Levels in Excess of Standards 29
7.3 Generation of Excessive Groundborne Vibration 34
7.4 Permanent Noise Level Increase 35
7.5 Temporary Noise Level Increase 35
7.6 Aircraft Noise 37

8.0 References 38

TABLE OF CONTENTS CONTINUED

APPENDIX

Appendix A – Study Area Photo Index
Appendix B – Field Noise Measurement Printouts
Appendix C – FHWA Model Traffic Noise Contour Calculations
Appendix D – RCNM Model Construction Noise Calculations

LIST OF FIGURES

Figure 1 – Project Location Map 11
Figure 2 – Proposed Site Plan 12
Figure 3 – Land Use Compatibility Matrix 19
Figure 4 – Noise Monitoring Locations 23

LIST OF TABLES

Table A – FTA Construction Noise Criteria 16
Table B – FTA Transportation Noise Sources Effects on Cumulative Noise Exposure 17
Table C – Noise Level Measurement Results 22
Table D – Construction Equipment Noise Emissions and Usage Factors 24
Table E – FHWA Model Roadway Parameters 25
Table F – Average Daily Traffic Volumes 26
Table G – Roadway Vehicle Mix 27
Table H – Vibration Source Levels for Construction Equipment 27
Table I – Alternative Route 1 Project Traffic Noise Contributions 30
Table J – Alternative Route 2 Project Traffic Noise Contributions 31
Table K – Alternative Route 3 Project Traffic Noise Contributions 32
Table L – Alternative Route 4 Project Traffic Noise Contributions 33
Table M – Unmitigated Worst-Case Construction Noise Levels at Nearest Property Lines 36

ACRONYMS AND ABBREVIATIONS

ANSI	American National Standards Institute
Caltrans	California Department of Transportation
CEQA	California Environmental Quality Act
cfs	Cubic feet per second
CNEL	Community Noise Equivalent Level
dB	Decibel
dBA	A-weighted decibels
DOT	Department of Transportation
FHWA	Federal Highway Administration
FTA	Federal Transit Administration
EPA	Environmental Protection Agency
Hz	Hertz
LACDPW	Los Angeles County Department of Public Works
LACFCD	Los Angeles County Flood Control District
Ldn	Day-night average noise level
Leq	Equivalent sound level
Lmax	Maximum noise level
ONAC	Federal Office of Noise Abatement and Control
OSB	Oriented Strand Board
OSHA	Occupational Safety and Health Administration
PPV	Peak particle velocity
RMS	Root mean square
SEL	Single Event Level or Sound Exposure Level
STC	Sound Transmission Class
UMTA	Federal Urban Mass Transit Administration
VdB	Vibration decibels

1.0 INTRODUCTION

1.1 Purpose of Analysis and Study Objectives

This Noise Impact Analysis has been prepared to determine the noise impacts associated with the proposed Pacoima Spreading Grounds Improvement Project (proposed project). The following is provided in this report:

- A description of the study area and the proposed project;
- Information regarding the fundamentals of noise;
- Information regarding the fundamentals of vibration;
- A description of the local noise guidelines and standards;
- An evaluation of the current noise environment;
- An analysis of the potential short-term construction-related noise impacts from the proposed project; and,
- An analysis of long-term operations-related noise impacts from the proposed project.

1.2 Site Location and Study Area

The project site is on County of Los Angeles (County) owned property that is located within the northern portion of the City of Los Angeles (City) and is located on the west side of the Pacoima Diversion Channel. The project site is approximately 169 acre in area, bisected by Arleta Avenue and Devonshire Street and is hydraulically connected by pipes underneath these roads. The project site is bordered by Filmore Street to the southeast, Woodman Avenue to the west, San Jose Street to the north, and Arleta Avenue to the northeast and is bisected by Devonshire Street. The Project Location Map is shown in Figure 1 on page 11.

1.3 Proposed Project Description

The principle objective of the proposed project is to increase groundwater recharge of the San Fernando Groundwater Basin by increasing the facility's storage capacity and restoring its percolation rate through excavation and reconfiguration of the spreading basins. The proposed project would include improvements to the intake structure as well as sediment removal and reconfiguration of the spreading basins. The proposed site plan is shown in Figure 2 on page 12.

Intake Structure Improvements

The existing intake structure will be improved by replacing the current intake canal with four 54-inch diameter Reinforced concrete pipes (RCPs). The pipes will extend from the headworks to the culverts that convey water to the spreading basins. After the pipes are installed, the intake channel will be backfilled with approximately 27,850 cubic yards of sediment removed from the spreading basins. Due to the variability of uncontrolled flows in Pacoima Diversion Channel, careful operation of the radial gate is currently required to regulate flows into the intake canal. When flows in excess of 600 cubic feet per second (cfs) enter the intake canal, water can potentially overtop the intake canal, resulting in localized flooding. Replacing the intake canal with pipes will restrict the intake to the design flow rate of 600 cfs and eliminate the potential for overtopping the intake canal.

Sediment Removal

The recharge basins will be reconfigured and deepened to allow for greater percolation and capacity. Approximately 1.6 million cubic yards of sediment will be excavated in order to completely remove the underlying clay layers; however, only 1.37 million cubic yards of sediment will be exported from the site. The remainder of the sediment will be used to backfill the existing intake channel or be returned to the spreading basins to bring the basin inverts up to their finished elevation.

The proposed project includes transportation and placement of excavated material at facilities prepared and designated to accept such material. A total of three sediment disposal sites have been identified for consideration, either individually or in combination: Boulevard Pit, Sheldon Pit, and the Cal-Mat Pit. All three sites are located in the Sun Valley area of Los Angeles, approximately 5.7 miles southeast of the Pacoima Spreading Grounds.

Two haul routes from the Pacoima Spreading Grounds site to the sediment disposal site/s have been identified. One haul route would be to travel northeast on Paxton Street to access the I-5 Southbound Freeway, taking the exit towards Sheldon Street, and either traveling northeast along Sheldon Street after turning (right) onto Laurel Canyon Boulevard to access either the Sheldon Pit or the Cal-Mat Pit, or heading north on Laurel Canyon Boulevard to turn east (right) on Branford Street to access the Boulevard Pit. The other haul route would be to travel northeast on Paxton Street to access San Fernando Road. Heading south on San Fernando Road, the trucks would either turn northeast (left) on Sheldon Street to access the Sheldon Pit or Cal-Mat Pit, or turn southwest (right) on Sheldon Street and then head north (right) on Laurel Canyon Boulevard to turn east (right) on Branford Street to access the Boulevard Pit.

Project Schedule

The proposed project is expected to occur over an 18-month period, between Spring 2016 and Fall 2017. Excavation activities will take place year-round, and the spreading grounds will not be operated for the duration of the proposed project's construction. Activities will take place six days a week between the hours of 7:00 a.m. to 7:00 p.m. on Monday through Friday and 8:00 a.m. to 5:00 p.m. on Saturday.

1.4 Sensitive Receptors in Project Vicinity

The project site is located in a residential community and is surrounded on all sides by residential and park uses. As detailed in the site plan shown in Figure 2 on page 12, the proposed improvements would disturb most but not all of the spreading basin property as there are areas around the perimeter of project site that would not be disturbed. The nearby off-site sensitive receptors to each portion of the proposed project are detailed below and the distances are based on the distance from the proposed disturbed areas on the project site to the nearest structure for homes and the church or use area for parks.

West Settling Basin

The proposed West Settling Basin is located on the northern side of the project site and is bounded by Arleta Avenue to the northeast. The nearby sensitive receptors consist of: single-family homes located on the south side of San Jose Street and as near as 40 feet north of the proposed improvements; and single-family homes located on the northeast side of Arleta Avenue and as near as 130 feet northeast of the proposed improvements to the West Settling Basin.

East Settling Basin

The proposed East Settling Basin is located on the eastern side of the project site and is bounded by Arleta Avenue to the northeast and Devonshire Street to the south. The nearby sensitive receptors consist of: Devonshire Arleta Park that is located as near as 220 feet east of the proposed improvements; and

single-family homes located on the east side of Pacoima Diversion Channel and as near as 280 feet east of the proposed improvements to the East Settling Basin.

Basin 1

The proposed Basin 1 is located on the eastern corner of the project site and is bounded by Devonshire Street to the north, Pacoima Diversion Channel to the east and Filmore Street to the southeast. The nearby sensitive receptors consist of: Devonshire Arleta Park that is located as near as 220 feet northeast of the proposed improvements; single-family homes located on the east side of Pacoima Diversion Channel and as near as 170 feet east of the proposed improvements; and single- and multi-family homes located on the southeast side of Filmore Street and as near as 125 feet southeast of the proposed improvements to Basin 1.

Basin 2

The proposed Basin 2 is located on the southeastern side of the project site and is bounded by Devonshire Street to the north and Filmore Street to the southeast. The nearby sensitive receptors consist of single-family homes located on the southeast side of Filmore Street and as near as 120 feet southeast of the proposed improvements to Basin 2.

Basin 3

The proposed Basin 3 is located on the northern side of the project site and is bounded by West Settling Basin to the east and the SCE Easement to the west. The nearby sensitive receptors consist of: single-family homes located on the south side of San Jose Street and as near as 70 feet north of the proposed improvements; and single-family homes on the east side of Hiawatha Street and as near as 70 feet west of the proposed improvements to Basin 3.

Basin 4

The proposed Basin 4 is located on the northwestern corner of the project site and is bounded by the SCE Easement to the east and Devonshire Street to the south. The nearby sensitive receptors consist of: single-family homes located on the south side of Hiawatha Street and as near as 50 feet north of the proposed improvements; and single-family homes on the east side of Blackhawk Street and as near as 60 feet west of the proposed improvements to Basin 4.

Basin 5

The proposed Basin 5 is located on the western side of the project site and is bounded by Devonshire Street to the north and Devonwood Park to the west. The nearby sensitive receptors consist of: Devonwood Park located as near as 30 feet west of the proposed improvements; and single-family homes located on the north side of Devonshire Street and as near as 135 feet north of the proposed improvements to Basin 5.

Basin 6

The proposed Basin 6 is located on the southwest corner of the project site and is bounded by and Devonwood Park to the north, Woodman Avenue to the southwest and Filmore Street to the southeast. The nearby sensitive receptors consist of: Devonwood Park located as near as 40 feet north of the proposed improvements; the New Apostolic Church located on the east side of Woodman Avenue and as near as 30 feet west of the proposed improvements; and single-family homes located on the east side of Woodman Avenue and as near as 30 feet west of the proposed improvements to Basin 6.

Diversion Channel Intake

The proposed diversion channel intake improvements is located in the northeast corner of the project site and is bounded by the Pacoima Diversion Channel to the east and Arleta Avenue to the southwest. The nearby sensitive receptors consist of single-family homes located on the east side of Minnehaha Street and as near as 40 feet west of the proposed improvements to the diversion channel intake.

Haul Routes

The proposed Haul Routes would consist of the haul trucks traveling from the project site on Paxton Street to either Interstate 5 where they would exit at Sheldon Street or to stay on Paxton Street to San Fernando Avenue. Other streets that may be utilized by the haul trucks include Laurel Canyon Boulevard, Branford Street, and Glenoaks Boulevard.

The nearby sensitive receptors on Paxton Street consist of: single- and multi-family homes that are located as near as 20 feet from the travel lanes; Ritchie Valens Park that is located as near as 15 feet from the travel lanes; and Telfair Elementary School that is located as near as 25 feet from the travel lanes of Paxton Street.

The nearby sensitive receptors on San Fernando Road consist of: single- and multi-family homes as near as 110 feet from the travel lanes; and Pacifica Hospital of the Valley that is located as near as 180 feet from the travel lanes of San Fernando Road.

The nearby sensitive receptors on Sheldon Street consist of: single- and multi-family homes as near as 20 feet from the travel lanes; and Sun Valley High School located as near as 25 feet from the travel lanes of Sheldon Street.

The nearby sensitive receptors on Laurel Canyon Boulevard consist of: multi-family and mobile homes as near as 25 feet from the travel lanes; and Fernangeles Recreation Center located as near as 15 feet from the travel lanes of Laurel Canyon Boulevard.

The nearby sensitive receptors on Branford Street consist of single- and multi-family homes as near as 25 feet from the travel lanes of Branford Street.

There are no sensitive receptors in the vicinity of Glenoaks Boulevard that would be utilized by the haul trucks for the proposed project.

1.5 Standard Noise Regulatory Conditions

The proposed project will be required to comply with the following regulatory conditions from the City of Los Angeles and State of California.

City of Los Angeles Municipal Code

The following lists the City of Los Angeles Municipal Code regulations that are applicable to all development projects in the City.

<u>Section 41.40(a) Construction Noise</u>

Section 41.40(a) of the City's Municipal Code limits construction activities, including excavation works to between the hours of 9:00 p.m. and 7:00 a.m., any day of the week.

State of California Rules

The following lists the State of California rules that are applicable to the project.

California Vehicle Code Section 27200-27207 – On-Road Vehicle Noise

California Vehicle Code Section 27200-27207 provides noise limits for vehicles operated in California. For vehicles over 10,000 pounds noise is limited to 88 dB for vehicles manufactured before 1973, 86 dB for vehicles manufactured before 1975, 83 dB for vehicles manufactured before 1988, and 80 dB for vehicles manufactured after 1987. All measurements are based at 50 feet from the vehicle. For the project, "on-road" vehicles over 10,000 pounds would include haul trucks and construction equipment delivery trucks/tractor trailers.

California Vehicle Section 38365-38380 – Off-Road Vehicle Noise

California Vehicle Code Section 38365-38380 provides noise limits for off-highway motor vehicles operated in California. 92 dBA for vehicles manufactured before 1973, 88 dBA for vehicles manufactured before 1975, 86 dBA for vehicles manufactured before 1986, and 82 dBA for vehicles manufactured after December 31, 1985. All measurements are based at 50 feet from the vehicle.

1.6 Summary of Analysis Results

The following is a summary of the proposed project's impacts with regard to the State CEQA Guidelines noise checklist questions.

Expose persons to noise levels in excess of standards?

Less than significant impact.

Expose persons to excessive groundborne vibration?

Less than significant impact.

Result in a substantial permanent increase in ambient noise levels above existing levels without the proposed project?

No impact.

Result in a substantial temporary increase in ambient noise levels above existing levels without the proposed project?

Potentially significant impact. Implementation of Mitigation Measure 1 would reduce the impact to less than significant levels.

Expose persons to excessive noise levels from aircraft?

Less than significant impact.

1.6 Mitigation Measures Required for the Proposed Project

This analysis found that adherence to the State and City noise and vibration regulations detailed in Section 1.5 above and through implementation of the following mitigation, all noise and vibration impacts would be reduced to less than significant levels.

Mitigation Measure 1:

The County of Los Angeles Department of Public Works shall construct a 8-foot high temporary sound wall along the shared property line with the nearby homes located northwest of the Diversion Channel Improvements. The temporary sound wall shall extend a minimum of 100 feet past the extent of the Diversion Channel demolition activities and shall be constructed of minimum ½-inch plywood or Oriented Strand Board (OSB). The temporary sound wall shall be

installed prior to the start of demolition activities and shall remain until the completion of the Diversion Channel improvements.

Project Boundary

1:75,000

0 0.5 1 2
Miles

Version Date: 6/18/2013

CHAMBERS GROUP

VISTA ENVIRONMENTAL

Figure 1
Project Location Map

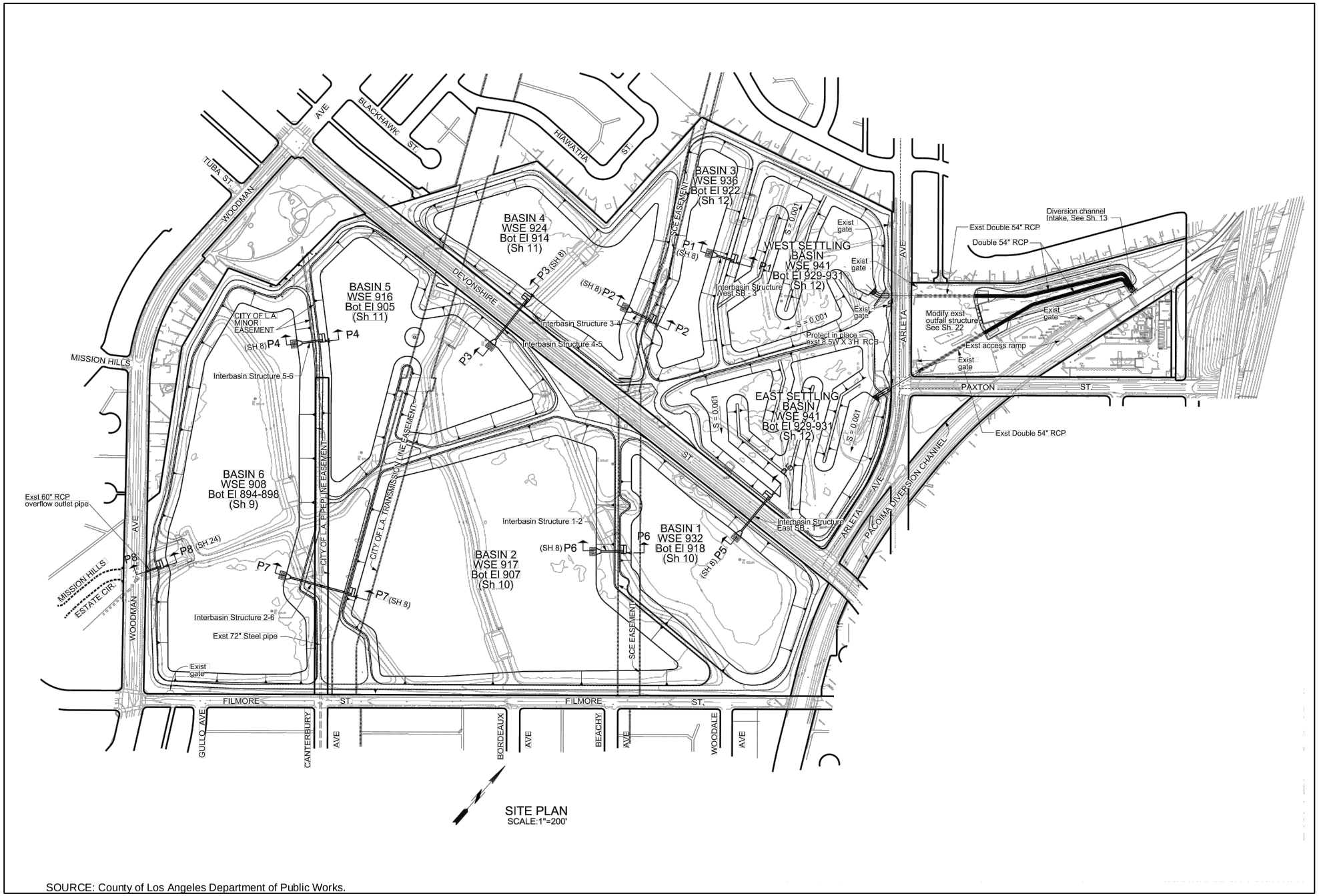

SOURCE: County of Los Angeles Department of Public Works.

VISTA ENVIRONMENTAL

Figure 2
Proposed Site Plan

2.0 NOISE FUNDAMENTALS

Noise is defined as unwanted sound. Sound becomes unwanted when it interferes with normal activities, when it causes actual physical harm, or when it has adverse effects on health. Sound is produced by the vibration of sound pressure waves in the air. Sound pressure levels are used to measure the intensity of sound and are described in terms of decibels. The decibel (dB) is a logarithmic unit which expresses the ratio of the sound pressure level being measured to a standard reference level. A-weighted decibels (dBA) approximate the subjective response of the human ear to a broad frequency noise source by discriminating against very low and very high frequencies of the audible spectrum. They are adjusted to reflect only those frequencies which are audible to the human ear.

2.1 Noise Descriptors

Noise Equivalent sound levels are not measured directly, but are calculated from sound pressure levels typically measured in A-weighted decibels (dBA). The equivalent sound level (Leq) represents a steady state sound level containing the same total energy as a time varying signal over a given sample period. The peak traffic hour Leq is the noise metric used by California Department of Transportation (Caltrans) for all traffic noise impact analyses.

The Day-Night Average Level (Ldn) is the weighted average of the intensity of a sound, with corrections for time of day, and averaged over 24 hours. The time of day corrections require the addition of ten decibels to sound levels at night between 10 p.m. and 7 a.m. While the Community Noise Equivalent Level (CNEL) is similar to the Ldn, except that it has another addition of 4.77 decibels to sound levels during the evening hours between 7 p.m. and 10 p.m. These additions are made to the sound levels at these time periods because during the evening and nighttime hours, when compared to daytime hours, there is a decrease in the ambient noise levels, which creates an increased sensitivity to sounds. For this reason the sound appears louder in the evening and nighttime hours and is weighted accordingly. The County of Los Angeles relies on the CNEL noise standard to assess transportation-related impacts on noise sensitive land uses.

2.2 Tone Noise

A pure tone noise is a noise produced at a single frequency and laboratory tests have shown that humans are more perceptible to changes in noise levels of a pure tone. For a noise source to contain a "pure tone," there must be a significantly higher A-weighted sound energy in a given frequency band than in the neighboring bands, thereby causing the noise source to "stand out" against other noise sources. A pure tone occurs if the sound pressure level in the one-third octave band with the tone exceeds the average of the sound pressure levels of the two contiguous one-third octave bands by:

- 5 dB for center frequencies of 500 hertz (Hz) and above
- 8 dB for center frequencies between 160 and 400 Hz
- 15 dB for center frequencies of 125 Hz or less

2.3 Noise Propagation

From the noise source to the receiver, noise changes both in level and frequency spectrum. The most obvious is the decrease in noise as the distance from the source increases. The manner in which noise reduces with distance depends on whether the source is a point or line source as well as ground absorption, atmospheric effects and refraction, and shielding by natural and manmade features. Sound from point sources, such as air conditioning condensers, radiate uniformly outward as it travels away

from the source in a spherical pattern. The noise drop-off rate associated with this geometric spreading is 6 dBA per each doubling of the distance (dBA/DD). Transportation noise sources such as roadways are typically analyzed as line sources, since at any given moment the receiver may be impacted by noise from multiple vehicles at various locations along the roadway. Because of the geometry of a line source, the noise drop-off rate associated with the geometric spreading of a line source is 3 dBA/DD.

2.4 Ground Absorption

The sound drop-off rate is highly dependent on the conditions of the land between the noise source and receiver. To account for this ground-effect attenuation (absorption), two types of site conditions are commonly used in traffic noise models, soft-site and hard-site conditions. Soft-site conditions account for the sound propagation loss over natural surfaces such as normal earth and ground vegetation. For point sources, a drop-off rate of 7.5 dBA/DD is typically observed over soft ground with landscaping, as compared with a 6.0 dBA/DD drop-off rate over hard ground such as asphalt, concrete, stone and very hard packed earth. For line sources a 4.5 dBA/DD is typically observed for soft-site conditions compared to the 3.0 dBA/DD drop-off rate for hard-site conditions. Caltrans research has shown that the use of soft-site conditions is more appropriate for the application of the Federal Highway Administration (FHWA) traffic noise prediction model used in this analysis.

3.0 GROUND-BORNE VIBRATION FUNDAMENTALS

Ground-borne vibrations consist of rapidly fluctuating motions within the ground that have an average motion of zero. The effects of ground-borne vibrations typically only cause a nuisance to people, but at extreme vibration levels damage to buildings may occur. Although ground-borne vibration can be felt outdoors, it is typically only an annoyance to people indoors where the associated effects of the shaking of a building can be notable. Ground-borne noise is an effect of ground-borne vibration and only exists indoors, since it is produced from noise radiated from the motion of the walls and floors of a room and may also consist of the rattling of windows or dishes on shelves.

3.1 Vibration Descriptors

There are several different methods that are used to quantify vibration amplitude such as the maximum instantaneous peak in the vibrations velocity, which is known as the peak particle velocity (PPV) or the root mean square (rms) amplitude of the vibration velocity. Due to the typically small amplitudes of vibrations, vibration velocity is often expressed in decibels and is denoted as (L_v) and is based on the rms velocity amplitude. A commonly used abbreviation for vibration decibels is "VdB", which in this text, is when L_v is based on the reference quantity of 1 micro inch per second.

3.2 Vibration Perception

Typically, developed areas are continuously affected by vibration velocities of 50 VdB or lower. These continuous vibrations are not noticeable to humans whose threshold of perception is around 65 VdB. Off-site sources that may produce perceptible vibrations are usually caused by construction equipment, steel-wheeled trains, and traffic on rough roads, while smooth roads rarely produce perceptible ground-borne noise or vibration.

3.3 Vibration Propagation

The propagation of ground-borne vibration is not as simple to model as airborne noise. This is due to the fact that noise in the air travels through a relatively uniform median, while ground-borne vibrations travel through the earth which may contain significant geological differences. There are three main types of vibration propagation; surface, compression, and shear waves. Surface waves, or Rayleigh waves, travel along the ground's surface. These waves carry most of their energy along an expanding circular wave front, similar to ripples produced by throwing a rock into a pool of water. P-waves, or compression waves, are body waves that carry their energy along an expanding spherical wave front. The particle motion in these waves is longitudinal (i.e., in a "push-pull" fashion). P-waves are analogous to airborne sound waves. S-waves, or shear waves, are also body waves that carry energy along an expanding spherical wave front. However, unlike P-waves, the particle motion is transverse or "side-to-side and perpendicular to the direction of propagation."

As vibration waves propagate from a source, the vibration energy decreases in a logarithmic nature and the vibration levels typically decrease by 6 VdB per doubling of the distance from the vibration source. As stated above, this drop-off rate can vary greatly depending on the soil but has been shown to be effective enough for screening purposes, in order to identify potential vibration impacts that may need to be studied through actual field tests.

4.0 REGULATORY SETTING

The project site is located in the City of Los Angeles. Noise regulations and standards are addressed by various federal, state, and local government agencies. The agencies responsible for regulating noise that are applicable to the project are discussed below.

4.1 Federal Regulations

The adverse impact of noise was officially recognized by the federal government in the Noise Control Act of 1972, which serves three purposes:

- Promulgating noise emission standards for interstate commerce
- Assisting state and local abatement efforts
- Promoting noise education and research

The Federal Office of Noise Abatement and Control (ONAC) was initially tasked with implementing the Noise Control Act. However, the ONAC has since been eliminated, leaving the development of federal noise policies and programs to other federal agencies and interagency committees. For example, the Occupational Safety and Health Administration (OSHA) agency prohibits exposure of workers to excessive sound levels. The Department of Transportation (DOT) assumed a significant role in noise control through its various operating agencies. The Federal Aviation Administration (FAA) regulates noise of aircraft and airports. Surface transportation system noise is regulated by a host of agencies, including the Federal Transit Administration (FTA). Transit noise is regulated by the federal Urban Mass Transit Administration (UMTA), while freeways that are part of the interstate highway system are regulated by the Federal Highway Administration (FHWA). Finally, the federal government actively advocates that local jurisdictions use their land use regulatory authority to arrange new development in such a way that "noise sensitive" uses are either prohibited from being sited adjacent to a highway or, alternately that the developments are planned and constructed in such a manner that potential noise impacts are minimized.

Although the proposed project is not under the jurisdiction of the FTA, the FTA is the only agency that has defined what constitutes significant construction and transportation source noise impacts from implementing a project. The FTA standards are based on extensive studies by the FTA and other governmental agencies on the human effects and reaction to noise from construction and transportation sources. The FTA recommends developing construction noise criteria on a project-specific basis that utilizes local noise ordinances if possible. However, local noise ordinances usually relates to nuisance and hours of allowed activity and sometimes specify limits in terms of maximum levels, but are generally not practical for assessing the noise impacts of a construction project. Project construction noise criteria should take into account the existing noise environment, the absolute noise levels during construction activities, the duration of the construction, and the adjacent land uses. A summary of the FTA findings for a detailed construction noise assessment are provided below in Table A.

Table A – FTA Construction Noise Criteria

	Day (dBA Leq)		Night (dBA Leq)	
Land Use	**1-Hour**	**8-Hour**	**1-Hour**	**8-Hour**
Residential	90	80	80	70
Commercial	100	85	100	85
Industrial	100	90	100	90

Source: Federal Transit Administration, 2006.

Since the federal government has preempted the setting of standards for noise levels that can be emitted by the transportation sources, the local jurisdictions are restricted to regulating the noise generated by transportation systems (public roads) through nuisance abatement ordinances and land use planning. A summary of the FTA findings for transportation noise sources are provided below in Table B.

Table B – FTA Transportation Noise Sources Effects on Cumulative Noise Exposure

Existing Noise Exposure (dBA Leq or Ldn)	Allowable Noise Impact Exposure dBA Leq or Ldn		
	Project Only	Combined	Noise Exposure Increase
45	51	52	+7
50	53	55	+5
55	55	58	+3
60	57	62	+2
65	60	66	+1
70	64	71	+1
75	65	75	0

Source: Federal Transit Administration, 2006.

4.2 State Regulations

Noise Standards

California Department of Health Services Office of Noise Control

Established in 1973, the California Department of Health Services Office of Noise Control (ONC) was instrumental in developing regulatory tools to control and abate noise for use by local agencies. One significant model is the "Land Use Compatibility for Community Noise Environments Matrix," which allows the local jurisdiction to clearly delineate compatibility of sensitive uses with various incremental levels of noise and which is shown in Figure 3 on page.

California Vehicle Code Section 27200-27207 – On-Road Vehicle Noise

California Vehicle Code Section 27200-27207 provides noise limits for vehicles operated in California. For vehicles over 10,000 pounds noise is limited to 88 dB for vehicles manufactured before 1973, 86 dB for vehicles manufactured before 1975, 83 dB for vehicles manufactured before 1988, and 80 dB for vehicles manufactured after 1987. All measurements are based at 50 feet from the vehicle. For the project, "on-road" vehicles over 10,000 pounds would include haul trucks and construction equipment delivery trucks/tractor trailers.

California Vehicle Section 38365-38380 – Off-Road Vehicle Noise

California Vehicle Code Section 38365-38380 provides noise limits for off-highway motor vehicles operated in California. 92 dBA for vehicles manufactured before 1973, 88 dBA for vehicles manufactured before 1975, 86 dBA for vehicles manufactured before 1986, and 82 dBA for vehicles manufactured after December 31, 1985. All measurements are based at 50 feet from the vehicle.

Vibration Standards

Title 14 of the California Administrative Code Section 15000 requires that all state and local agencies implement the California Environmental Quality Act (CEQA) Guidelines, which requires the analysis of

exposure of persons to excessive groundborne vibration. However, no statute has been adopted by the state that quantifies the level at which excessive groundborne vibration occurs.

Caltrans issued the *Transportation- and Construction-Induced Vibration Guidance Manual* in 2004. The manual provides practical guidance to Caltrans engineers, planners, and consultants who must address vibration issues associated with the construction, operation, and maintenance of Caltrans projects. However, this manual is also used as a reference point by many lead agencies and CEQA practitioners throughout California, as it provides numeric thresholds for vibration impacts. Thresholds are established for continuous and transient sources of vibration, which found that the human response becomes distinctly perceptible at 0.25 inch per second PPV for transient sources and 0.04 inch per second PPV for continuous sources.

Exhibit I: Guidelines for Noise Compatible Land Use

(Based on the Governor's Office of Planning and Research, "General Plan Guidelines", 1990. To help guide determination of appropriate land use and mitigation measures vis-a-vis existing or anticipated ambient noise levels)

Land Use Category	Day-Night Average Exterior Sound Level (CNEL dB)						
	50	55	60	65	70	75	80
Residential Single Family, Duplex, Mobile Home	A	C	C	C	N	U	U
Residential Multi-Family	A	A	C	C	N	U	U
Transient Lodging, Motel, Hotel	A	A	C	C	N	U	U
School, Library, Church, Hospital, Nursing Home	A	A	C	C	N	N	U
Auditorium, Concert Hall, Ampitheater	C	C	C	C/N	U	U	U
Sports Arena, Outdoor Spectator Sports	C	C	C	C	C/U	U	U
Playground, Neighborhood Park	A	A	A	A/N	N	N/U	U
Golf Course, Riding Stable, Water Recreation, Cemetery	A	A	A	A	N	A/N	U
Office Building, Business, Commercial, Professional	A	A	A	A/C	C	C/N	N
Agriculture, Industrial, Manufacturing, Utilities	A	A	A	A	A/C	C/N	N

A = Normally acceptable. Specified land use is satisfactory, based upon assumption buildings involved are conventional construction, without any special noise insulation.

C = Conditionally acceptable. New construction or development only after a detailed analysis of noise mitigation is made and needed noise insulation features are included in project design. Conventional construction, but with closed windows and fresh air supply systems or air conditioning normally will suffice.

N = Normally unacceptable. New construction or development generally should be discouraged. A detailed analysis of noise reduction requirements must be made and noise insulation features included in the design of a project.

U = Clearly unacceptable. New construction or development generally should not be undertaken.

I-1

Source: Noise Element of the Los Angeles General Plan, February 1999.

Figure 3
Land Use Compatibility Matrix

4.3 Local Regulations

The City of Los Angeles General Plan and Municipal Code establishes the following applicable policies related to noise and vibration. Although the project is located on County of Los Angeles-owned property, the noise-sensitive receptors in proximity to the site are located in the City. Therefore, City of Los Angeles noise regulations, rather than County, have been applied to this analysis.

City of Los Angeles General Plan Noise Element

Goal A city where noise does not reduce the quality of urban life.

Objective 2 (Nonairport)
Reduce or eliminate nonairport related intrusive noise, especially relative to noise sensitive uses.

Policy 2.2 Enforce and/or implement applicable city, State and federal regulations intended to mitigate proposed noise producing activities, reduce intrusive noise and alleviate noise that is deemed a public nuisance. (The applicable Federal and State regulations have been detailed above in Sections 4.1 and 4.2)

City of Los Angeles Municipal Code

The City of Los Angeles Municipal Code establishes the following applicable standards related to construction noise.

Section 41.40 Noise Due to Construction, Excavation Work – When Prohibited

(a) No person shall, between the hours of 9:00 P.M. and 7:00 A.M. of the following day, perform any construction or repair work of any kind upon, or any excavating for, any building or structure, where any of the foregoing entails the use of any power driven drill, riveting machine excavator or any other machine, tool, device or equipment which makes loud noises to the disturbance of persons occupying sleeping quarters in any dwelling hotel or apartment or other place of residence. In addition, the operation, repair or servicing of construction equipment and the job-site delivering of construction materials in such areas shall be prohibited during the hours herein specified. Any person who knowingly and wilfully violates the foregoing provision shall be deemed guilty of a misdemeanor punishable as elsewhere provided in this Code.

(j) As determined by the Executive Director of the Board, the provisions of Subsection (c) shall not apply to major public works construction by the City of Los Angeles and its proprietary Departments, including all structures and operations necessary to regulate or direct traffic due to construction activities. The Board, through its Executive Director, pursuant to Subsection (b) will grant a variance for this work and construction activities will be subject to all conditions of the variance as granted. Concurrent with the request for a variance, the City Department that will conduct the construction work will notify each affected Council district office and established Neighborhood Council of projects where proposed Sunday and/or Holiday work will occur.

Section 112.03 Construction Noise
Noise due to construction or repair work shall be regulated as provided by Section 41.40 of this Code.

5.0 EXISTING NOISE CONDITIONS

To determine the existing noise level environment noise measurements have been taken in the vicinity of the project site. The field survey noted that noise within the proposed project area is generally characterized by vehicular traffic on Devonshire Street, Arleta Avenue and Interstate 5 as well as aircraft noise. The following describes the measurement procedures, measurement locations, noise measurement results, and the modeling of the existing noise environment.

5.1 Noise Measurement Equipment

The short-term noise measurements were taken using a Larson-Davis Model 831 Type 1 precision sound level meter programmed in "slow" mode to record noise levels in "A" weighted form as well as the frequency spectrum of the noise broken down into 1/3 octaves. The sound level meter and microphone were mounted on a tripod five feet above the ground and were equipped with a windscreen during all measurements. The sound level meter was calibrated before and after the monitoring using a Larson-Davis calibrator, Model CAL 200. The accuracy of the calibrator is maintained through a program established through the manufacturer and is traceable to the National Bureau of Standards. The unit meets the requirements of ANSI Standard S1.4-1984 and IEC Standard 942: 1988 for Class 1 equipment. All noise level measurement equipment meets American National Standards Institute (ANSI) specifications for sound level meters (S1.4-1983 identified in Chapter 19.68.020.AA).

Noise Measurement Location

The noise monitoring locations were selected in order to obtain noise measurements of the current noise levels in the project study area and to provide a baseline for any potential noise impacts that may be created by development of the proposed project. The noise measurement sites were selected to provide a representative sampling of the noise levels created by nearby noise sources. Descriptions of the noise monitoring sites are provided below in Table C and are shown in Figure 4 on page 23. Appendix A includes a photo index of the study area and noise level measurement locations.

Noise Measurement Timing and Climate

The noise measurements were recorded between 12:19 p.m. and 2:03 p.m. on Tuesday, August 19, 2014. The local schools were observed to be in session during the noise measurements, so the noise measurements represent the anticipated noise levels that would occur during a typical workday. At the start of the noise measurements the sky was partly cloudy, the temperature was 79 degrees Fahrenheit, the humidity was 47 percent, barometric pressure was 28.88 inches of mercury, and the wind was blowing around four miles per hour. At the conclusion of the noise measurements the sky was partly cloudy, the temperature was 81 degrees Fahrenheit, the humidity was 35 percent, barometric pressure was 28.90 inches of mercury, and the wind was blowing around two miles per hour.

All traffic noise measurement durations were measured according to the standards stated in Section N-3320 of Caltrans Technical Noise Supplement (TeNS), which specifies that the measurements be a duration of at least 10 minutes and shall be continued past 10 minutes until the fluctuations in the displayed L_{eq} is less than 0.5 dBA.

5.2 Noise Measurement Results

The results of the noise level measurements are presented on the following page in Table C and the noise monitoring data printouts are included in Appendix B.

Table C – Noise Level Measurement Results

Site No.	Description	Primary Noise Source	Start Time of Measurement	Noise Level (dBA L_{eq}/L_{max})
1	Located next to the southwest corner of the intake structure.	Interstate 5 and aircraft	12:19 p.m.	56.93/69.5
2	Located west of the spreading ground on the south side of Devonwood Park and approximately 150 feet east of Woodman Avenue centerline.	Woodman Avenue, children playing in park and aircraft	12:42 p.m.	54.4/69.5
3	Located east of the spreading grounds and on the southeast side of Filmore Street and approximately 125 feet southwest of the end of Filmore Street.	Devonshire Street and aircraft	1:16 p.m.	49.6/62.3
4	Located at the parking lot on the north corner of Sun Valley High School and approximately 50 feet southeast of Sheldon Street centerline and 100 feet southwest of Telfair Avenue centerline.	Sheldon Street, Telfair Avenue and children at High School	1:50 p.m.	67.3/82.0

Notes: Noise measurements taken on August 19, 2014.

Project Boundary

4 Noise Measurement Location

CHAMBERS GROUP

1:75,000

0 0.5 1 2 Miles

Version Date: 6/18/2013

VISTA ENVIRONMENTAL

Figure 4
Noise Monitoring Locations

6.0 MODELING PARAMETERS AND ASSUMPTIONS

6.1 On-Site Construction Noise

The noise impacts from on-site construction of the proposed project have been analyzed through use of the FHWA's Roadway Construction Noise Model (RCNM). Although the project is not comprised of roadway construction, the FHWA compiled noise measurement data regarding the noise generating characteristics of several different types of construction equipment used during the Central Artery/Tunnel project in Boston and is applicable to all construction types. Table D below provides a list of the construction equipment that was provided by the County of Los Angeles Department of Public Works that is anticipated to be used during of construction.

Table D – Construction Equipment Noise Emissions and Usage Factors

Equipment Description	Number of Equipment	Acoustical Use Factor[1] (percent)	Spec 721.560 Lmax at 50 feet[2] (dBA, slow[3])	Actual Measured Lmax at 50 feet[4] (dBA, slow[3])
Dozer	2	40	85	82
Excavator	2	40	85	81
Mounted Impact Hammer[5]	1	20	90	90
Sediment Shaker[6]	1	50	85	87
Water Truck[7]	3	40	84	74
Street Sweeper	1	10	80	82
Dump Truck	11[8]	40	84	76

Notes:
[1] Acoustical use factor is the percentage of time each piece of equipment is operational during a typical workday.
[2] Spec 721.560 is the equipment noise level utilized by the RCNM program.
[3] The "slow" response averages sound levels over 1-second increments. A "fast" response averages sound levels over 0.125-second increments.
[4] Actual Measured is the average noise level measured of each piece of equipment during the Central Artery/Tunnel project in Boston, Massachusetts primarily during the 1990s.
[5] The mounted impact hammer would be mounted on an excavator and would be utilized for demolition of the intake structure.
[6] The nearest match to a sediment shaker in the RCNM model is a vibratory hopper.
[7] The water trucks were modelled as flat bed trucks since there was no water truck available in the RCNM model.
[8] There will be 11 dump trucks operating simultaneously, however no more than 4 dump trucks are anticipated to be operating on the spreading grounds at any time.
Source: Federal Highway Administration, 2006.

Table D also shows the associated measured noise emissions for each piece of equipment from the RCNM model and measured percentage of typical equipment use per day. Construction noise impacts to the nearby sensitive receptors have been calculated according to the equipment noise levels and usage factors listed in Table D and through use of the RCNM. For each phase of construction, the nearest piece of equipment was placed at the shortest distance of the proposed activity on the site to the nearest home and each subsequent piece of equipment was placed an additional 50 feet away in order to calculate the combined noise impacts of the simultaneous operation of all listed equipment provided in Table D. It is noted the that the noise model incorporates several additional conservative assumptions, including: (1) hard terrain on the site, whereas the site is comprised of primarily soft terrain (i.e., dirt) that provides relatively lower noise levels, (2) direct line of sight between the noise source and receptor (i.e., no barriers), and (3) stationary operation of each piece of equipment for a period of one hour, with the nearest equipment being a dozer. In reality, the on-site construction activity would not be stationary for an hour, or close to an hour, and the majority of the spreading basin excavation and channel replacement would occur at a further distance than the nearest point on the site, as modeled, and would also be below the grade of the surrounding receptors (e.g., at a lower level) thereby providing noise reduction.

Regarding the channel replacement, the model incorporated noise generation from the demolition activity, the noisiest activity for this project component. Therefore, all construction activity subsequent to the demolition (e.g., pipe installation, backfilling) would result in lower noise levels than the demolition activity and so are encompassed by the noise model.

6.2 Off-Site Vehicular Noise

The proposed project would require the export of material from the project site through the use of trucks as well as generate from vehicle trips from workers at the project site. In order to quantify the potential noise impacts created and received by the proposed project and compare them to the existing noise levels, the existing roadway noise environment was modeled using the FHWA Traffic Noise Prediction Model - FHWA-RD-77-108 (FHWA Model). The FHWA Model arrives at a predicted noise level through a series of adjustments to the Reference Energy Mean Emission Level (REMEL). Adjustments are then made to the reference energy mean emission level to account for: the roadway active width (i.e., the distance between the center of the outermost travel lanes on each side of the roadway), the total average daily traffic (ADT) and the percentage of ADT which flows during the day, evening and night, the travel speed, the vehicle mix on the roadway, which is a percentage of the volume of automobiles, medium trucks and heavy trucks, the roadway grade, the angle of view of the observer exposed to the roadway and site conditions ("hard" or "soft" relates to the absorption of the ground, pavement or landscaping). The following section provides a discussion of the software and modeling input parameters used in this analysis and a discussion of the resultant existing noise model.

FHWA Model Roadway Parameters

The roadway parameters used for this study are presented in Table E. Only the roadway segments that the proposed project may generate additional vehicular trips and had sensitive land uses (i.e., residential, school, parks, libraries, and hospitals) were analyzed.

The roadway classifications are based on the roadway jurisdiction's General Plan Circulation Element. The roadway speeds are based on the posted speed limits. The distance to the nearest sensitive receptor was determined by measuring the distance from the roadway centerline to the nearest residence, school, park, or hospital. Soft site conditions were used to develop noise contours and analyze noise impacts to the project site. Soft sites have an absorptive ground surface such as soft dirt, grass, or scattered bushes and trees.

Table E – FHWA Model Roadway Parameters

Roadway	Segment	General Plan Classification	Vehicle Speed (MPH)	Distance to Nearest Receptor (feet)
Arleta Avenue	North of Devonshire Street	Secondary	40	150
Arleta Avenue	East of Devonshire Street	Secondary	40	60
Paxton Street	North of Arleta Avenue	Secondary	40	55
Paxton Street	North of I-5 Northbound Ramps	Secondary	40	50
Laurel Canyon Boulevard	West of I-5 Southbound Ramps	Major	35	55
Laurel Canyon Boulevard	West of I-5 Northbound Off-Ramp	Major	35	55
Branford Street	North of Laurel Canyon Boulevard	Secondary	35	50
Branford Street	South of San Fernando Road	Secondary	35	60
Sheldon Street	North of I-5 Northbound On-Ramp	Secondary	35	60

Roadway	Segment	General Plan Classification	Vehicle Speed (MPH)	Distance to Nearest Receptor (feet)
Sheldon Street	North of Haddon Avenue	Secondary	35	45
Sheldon Street	North of Telfair Avenue	Secondary	35	55
Sheldon Street	South of San Fernando Road	Secondary	35	45
San Fernando Road	West of Sheldon Street	Major	35	40
San Fernando Road	West of Branford Street	Major	35	85

Source: Linscott, Law & Greenspan, 2015; and Google Earth, 2014.

FHWA Model Traffic Volumes

The average daily traffic (ADT) volumes on the study area roadways were obtained from *Traffic Impact Study Pacoima Spreading Grounds Improvement Project* (Traffic Impact Analysis), prepared by Linscott Law & Greenspan, May 20, 2015. Since the Traffic Impact Analysis only provided peak hour and mid-day volumes, the ADT was calculated by multiplying the sum of all measured hours (6 hours total) by 4, which was calculated by dividing 24 hours by 6 hours. The project-only passenger car equivalent (PCE) trips provided in the Traffic Impact Analysis were converted back to non-PCE volumes by dividing the project trips by 2.5. The ADT volumes have been provided for existing without project and existing with Alternatives 1 through 4 conditions. The ADT volumes used in this analysis are shown in Table F.

Table F – Average Daily Traffic Volumes

Roadway	Segment	Average Daily Traffic Volumes				
		Existing	Existing + Alt1	Existing + Alt 2	Existing + Alt 3	Existing + Alt 4
Arleta Avenue	North of Devonshire Street	13,950	14,430	14,430	14,430	14,430
Arleta Avenue	East of Devonshire Street	18,950	18,960	18,960	18,960	18,960
Paxton Street	North of Arleta Avenue	13,950	14,430	14,430	14,430	14,430
Paxton Street	North of I-5 Northbound Ramps	14,920	15,110	15,110	15,110	15,110
Laurel Canyon Boulevard	West of I-5 Southbound Ramps	21,680	21,820	21,820	21,820	21,820
Laurel Canyon Boulevard	West of I-5 Northbound Off-Ramp	19,560	19,640	19,800	19,560	19,560
Branford Street	North of Laurel Canyon Boulevard	15,840	15,920	16,080	15,840	15,840
Branford Street	South of San Fernando Road	11,220	11,300	11,460	11,220	11,220
Sheldon Street	North of I-5 Northbound On-Ramp	22,020	22,230	22,260	22,310	22,310
Sheldon Street	North of Haddon Avenue	19,970	20,180	20,210	20,260	20,260
Sheldon Street	North of Telfair Avenue	17,260	17,470	17,500	17,550	17,550
Sheldon Street	South of San Fernando Road	19,860	20,070	20,100	20,150	20,150
San Fernando Road	West of Sheldon Street	16,640	16,850	16,880	16,830	16,830
San Fernando Road	West of Branford Street	16,580	16,770	16,770	16,770	16,770

Source: Linscott, Law & Greenspan, 2015.

FHWA Model Vehicle Mix Assumptions

The vehicle mixes used in the FHWA-RD-77-108 Model are shown on the following page in Table G. The Arterial without project is based on typical vehicle mixes observed in Southern California. The

Arterial with project vehicle mix has been calculated based on the road with the highest ratio of haul trucks added to the road by the proposed project.

FHWA Model Source Assumptions

To assess the roadway noise generation in a uniform manner, all vehicles are analyzed at the single lane equivalent acoustic center of the roadway being analyzed. In order to determine the height above the road grade where the noise is being emitted from, each type of vehicle has been analyzed independently with autos at road grade, medium trucks at 2.3 feet above road grade, and heavy trucks at 8 feet above road grade. These elevations were determined through a noise-weighted average of the elevation of the exhaust pipe, tires and mechanical parts in the engine, which are the primary noise emitters from a vehicle.

Table G – Roadway Vehicle Mix

	Traffic Flow Distributions			
Vehicle Type	**Day (7 a.m. to 7 p.m.)**	**Evening (7 p.m. to 10 p.m.)**	**Night (10 p.m. to 7 a.m.)**	**Overall**
Arterial Without Project				
Automobiles	69.50%	12.90%	9.60%	92.00%
Medium Trucks	1.44%	0.06%	1.50%	3.00%
Heavy Trucks	2.40%	0.10%	2.50%	5.00%
Arterial With Project				
Automobiles	67.50%	12.50%	9.30%	89.28%
Medium Trucks	1.40%	0.06%	1.45%	2.91%
Heavy Trucks	5.37%	0.10%	2.42%	7.89%

Source: Vista Environmental.

6.3 Vibration

Construction activity can result in varying degrees of ground vibration, depending on the equipment used on the site. Operation of construction equipment causes ground vibrations that spread through the ground and diminish in strength with distance. Buildings in the vicinity of the construction site respond to these vibrations with varying results ranging from no perceptible effects at the low levels to slight damage at the highest levels. Table H gives approximate vibration levels for particular construction activities. The data in Table H provides a reasonable estimate for a wide range of soil conditions.

Table H – Vibration Source Levels for Construction Equipment

Equipment		Peak Particle Velocity (inches/second)	Approximate Vibration Level (L_v) at 25 feet
Pile driver (impact)	Upper range	1.518	112
	typical	0.644	104
Pile driver (sonic)	Upper range	0.734	105
	typical	0.170	93
Clam shovel drop (slurry wall)		0.202	94
Vibratory Roller		0.210	94
Hoe Ram		0.089	87
Large bulldozer		0.089	87

Equipment	Peak Particle Velocity (inches/second)	Approximate Vibration Level (L_v) at 25 feet
Caisson drill	0.089	87
Loaded trucks	0.076	86
Jackhammer	0.035	79
Small bulldozer	0.003	58

Source: Federal Transit Administration, May 2006.

The construction-related vibration impacts have been calculated through the vibration levels shown above in Table H and through typical vibration propagation rates. The equipment assumptions were based on the equipment lists provided on page 20 in Table D.

7.0 IMPACT ANALYSIS

7.1 CEQA Thresholds of Significance

Consistent with the California Environmental Quality Act (CEQA) and the State CEQA Guidelines, a significant impact related to noise would occur if a proposed project is determined to result in:

- Exposure of persons to or generation of noise levels in excess of standards established in the local General Plan or noise ordinance, or applicable standards of other agencies;
- Exposure of persons to or generation of excessive groundborne vibration or groundborne noise levels;
- A substantial permanent increase in ambient noise levels in the project vicinity above existing levels without the proposed project;
- A substantial temporary or periodic increase in ambient noise levels in the project vicinity above noise levels existing without the proposed project; or
- Exposure of persons residing or working in the project area to excessive noise levels from aircraft.

7.2 Generation of Noise Levels in Excess of Standards

The following section compares the potential noise emissions associated with the construction and operation of the proposed project to the City and FTA standards for on-site activity and FHWA standards for off-site (i.e., transportation) activity.

On-Site Construction Equipment Noise

The construction activities for the proposed project are anticipated to occur over an 18-month period and would include intake structure improvements, removal of sediment and reconfiguration of the spreading basins. Excavation activities will take place year-round, and the spreading grounds will not be operated for the duration of the proposed project's construction. According to the project applicant, construction activities will be limited to between the hours of 7:00 a.m. to 7:00 p.m. on Monday through Friday and 8:00 a.m. to 5:00 p.m. on Saturday. Section 41.40(a) of the City of Los Angeles Municipal Code exempts construction activities from the City's noise standards provided construction activities do not take place between the hours of 9:00 p.m. and 7:00 a.m. Therefore, the County's planned construction hours are more restrictive than the City's requirements, and would, therefore, not expose persons to or generate noise levels in excess of standards established in the City of Los Angeles General Plan or Noise Ordinance. Impacts would be less than significant.

Off-Site Vehicular Noise

The proposed project would require the removal of 1.37 million cubic yard of sediment from the project site that would generate up to 480 daily trips from haul trucks and up to 18 daily trips from workers commuting to the project site. The haul trucks would export the material from the project site to either Boulevard Pit, Sheldon Pit, and/or Cal-Mat Pit.

Vehicle noise is a combination of the noise produced by the engine, exhaust and tires. The level of traffic noise depends on three primary factors (1) the volume of traffic, (2) the speed of traffic, and (3) the number of trucks in the flow of traffic. The proposed project would alter both the volume of traffic and number of trucks on each road segment, however no changes in vehicle speed are anticipated from implementation of the proposed project.

The California Department of Health has developed the noise compatibility matrix, shown in Figure 3 on page 16, that has been adopted by most of the jurisdictions that may be impacted by the proposed project's vehicular noise and details normally acceptable noise levels for different land uses that include 60 dB CNEL for single-family homes, 65 dB CNEL for motels, and 70 dB CNEL for schools, hospitals, churches and parks. Neither the California Department of Health nor any of the local jurisdictions provide any direction for sensitive receptors that already exceed the normally acceptable noise levels for the Without Project condition, however the (Federal Transit Administration, 2006), which assesses noise and vibration impacts from transit projects found that when the ambient noise is between 60 and 64, a noise exposure increase of 2 dB is allowed before a significant impact would occur, when the ambient noise is between 65 and 74 dB CNEL, a noise exposure increase of 1 dB is allowed before a significant impact would occur and when the ambient noise exceeds 74 dB CNEL, any increase in noise exposure would create a significant impact.

The potential offsite traffic noise impacts created by project implementation project have been analyzed through utilization of the FHWA model and parameters described above in Section 6.2 and the FHWA model noise calculation spreadsheets are provided in Appendix C. The proposed project's offsite traffic noise impacts have been analyzed for Alternative Routes 1 through 4 conditions that are discussed below.

Alternative Route 1 Conditions

Alternative Route 1, would consist of concurrent use of all three disposal sites. The potential offsite noise impacts have been calculated through a comparison of the Existing scenario to the Existing Plus Alternative Route 1 scenario. The results of this comparison are shown on the following page in Table I.

Table I – Alternative Route 1 Project Traffic Noise Contributions

		dBA CNEL at Nearest Receptor[1]				Exceeds
Roadway	**Segment**	**Existing**	**Existing Plus Alternative 1**	**Project Contribution**	**Threshold**	**Threshold ?**
Arleta Avenue	North of Devonshire Street[2]	58.9	59.2	0.3	70 dBA	No
Arleta Avenue	East of Devonshire Street[3]	66.6	66.9	0.3	+1 dBA	No
Paxton Street	North of Arleta Avenue[3]	66.0	66.4	0.4	+1 dBA	No
Paxton Street	North of I-5 Northbound Ramps[3]	67.1	67.4	0.3	+1 dBA	No
Laurel Canyon Boulevard	West of I-5 Southbound Ramps[2]	66.9	67.3	0.4	70 dBA	No
Laurel Canyon Boulevard	West of I-5 Northbound Off-Ramp[3]	66.5	66.8	0.3	+1 dBA	No
Branford Street	North of Laurel Canyon Boulevard[3]	65.9	66.2	0.3	+1 dBA	No
Branford Street	South of San Fernando Road[3]	62.9	63.3	0.4	+2 dBA	No
Sheldon Street	North of I-5 Northbound On-Ramp[3]	65.8	66.2	0.4	+1 dBA	No
Sheldon Street	North of Haddon Avenue[4]	67.8	68.2	0.4	70 dBA	No
Sheldon Street	North of Telfair Avenue[3]	65.5	65.8	0.3	+1 dBA	No
Sheldon Street	South of San Fernando Road[5]	67.8	68.1	0.3	70 dBA	No
San Fernando Road	West of Sheldon Street[5]	69.4	69.8	0.4	+1 dBA	No
San Fernando Road	West of Branford Street[6]	62.2	62.6	0.4	65 dBA	No

Notes:
[1] Distance to nearest receptor shown in Table E, does not take into account existing noise barriers.
[2] Nearest sensitive receptor is a park.
[3] Nearest sensitive receptor is residential

Table I – Alternative Route 1 Project Traffic Noise Contributions

Roadway	Segment	dBA CNEL at Nearest Receptor[1] Existing	Existing Plus Alternative 1	Project Contribution	Threshold	Exceeds Threshold ?

[4] Nearest sensitive receptor is a school.
[5] Nearest sensitive receptor is a hospital.
[6] Nearest sensitive receptor is a motel.
Source: FHWA Traffic Noise Prediction Model FHWA-RD-77-108.

Table I shows that for the Alternative Route 1 conditions, the proposed project's noise increases to the nearby sensitive receptors from the generation of additional vehicular traffic would not exceed the increase thresholds detailed above. Furthermore, the proposed project would not cause the noise level at any nearby land use to exceed the normally compatible noise standard for the with project condition that did not already exceed the standards for the without project condition. Roadway noise impacts would be less than significant for Alternative Route 1.

Alternative Route 2 Conditions

Alternative Route 2, would consist of use of Boulevard Pit only. The potential offsite noise impacts have been calculated through a comparison of the Existing scenario to the Existing Plus Alternative Route 2 scenario. The results of this comparison are shown in Table J.

Table J – Alternative Route 2 Project Traffic Noise Contributions

Roadway	Segment	dBA CNEL at Nearest Receptor[1] Existing	Existing Plus Alternative 2	Project Contribution	Threshold	Exceeds Threshold ?
Arleta Avenue	North of Devonshire Street[2]	58.9	59.2	0.3	70 dBA	No
Arleta Avenue	East of Devonshire Street[3]	66.6	66.9	0.3	+1 dBA	No
Paxton Street	North of Arleta Avenue[3]	66.0	66.4	0.4	+1 dBA	No
Paxton Street	North of I-5 Northbound Ramps[3]	67.1	67.4	0.3	+1 dBA	No
Laurel Canyon Boulevard	West of I-5 Southbound Ramps[2]	66.9	67.3	0.4	70 dBA	No
Laurel Canyon Boulevard	West of I-5 Northbound Off-Ramp[3]	66.5	66.8	0.3	+1 dBA	No
Branford Street	North of Laurel Canyon Boulevard[3]	65.9	66.3	0.4	+1 dBA	No
Branford Street	South of San Fernando Road[3]	62.9	63.3	0.4	+2 dBA	No
Sheldon Street	North of I-5 Northbound On-Ramp[3]	65.8	66.2	0.4	+1 dBA	No
Sheldon Street	North of Haddon Avenue[4]	67.8	68.2	0.4	70 dBA	No
Sheldon Street	North of Telfair Avenue[3]	65.5	65.8	0.3	+1 dBA	No
Sheldon Street	South of San Fernando Road[5]	67.8	68.2	0.4	70 dBA	No
San Fernando Road	West of Sheldon Street[5]	69.4	69.8	0.4	+1 dBA	No
San Fernando Road	West of Branford Street[6]	62.2	62.6	0.4	65 dBA	No

Notes:
[1] Distance to nearest receptor shown in Table E, does not take into account existing noise barriers.
[2] Nearest sensitive receptor is a park.
[3] Nearest sensitive receptor is residential
[4] Nearest sensitive receptor is a school.
[5] Nearest sensitive receptor is a hospital.

Table J – Alternative Route 2 Project Traffic Noise Contributions

Roadway	Segment	dBA CNEL at Nearest Receptor[1] Existing	Existing Plus Alternative 2	Project Contribution	Threshold	Exceeds Threshold ?

[6] Nearest sensitive receptor is a motel.
Source: FHWA Traffic Noise Prediction Model FHWA-RD-77-108.

Table J shows that for the Alternative Route 2 conditions, the proposed project's noise increases to the nearby sensitive receptors from the generation of additional vehicular traffic would not exceed the increase thresholds detailed above. Furthermore, the proposed project would not cause the noise level at any nearby land use to exceed the normally compatible noise standard for the with project condition that did not already exceed the standards for the without project condition. Roadway noise impacts would be less than significant for Alternative Route 2.

Alternative Route 3 Conditions

Alternative Route 3, would consist of use of Sheldon Pit only. The potential offsite noise impacts have been calculated through a comparison of the Existing scenario to the Existing Plus Alternative Route 3 scenario. The results of this comparison are shown in Table K.

Table K – Alternative Route 3 Project Traffic Noise Contributions

Roadway	Segment	dBA CNEL at Nearest Receptor[1] Existing	Existing Plus Alternative 3	Project Contribution	Threshold	Exceeds Threshold ?
Arleta Avenue	North of Devonshire Street[2]	58.9	59.2	0.3	70 dBA	No
Arleta Avenue	East of Devonshire Street[3]	66.6	66.9	0.3	+1 dBA	No
Paxton Street	North of Arleta Avenue[3]	66.0	66.4	0.4	+1 dBA	No
Paxton Street	North of I-5 Northbound Ramps[3]	67.1	67.4	0.3	+1 dBA	No
Laurel Canyon Boulevard	West of I-5 Southbound Ramps[2]	66.9	67.3	0.4	70 dBA	No
Laurel Canyon Boulevard	West of I-5 Northbound Off-Ramp[3]	66.5	66.8	0.3	+1 dBA	No
Branford Street	North of Laurel Canyon Boulevard[3]	65.9	66.2	0.3	+1 dBA	No
Branford Street	South of San Fernando Road[3]	62.9	63.2	0.3	+2 dBA	No
Sheldon Street	North of I-5 Northbound On-Ramp[3]	65.8	66.2	0.4	+1 dBA	No
Sheldon Street	North of Haddon Avenue[4]	67.8	68.2	0.4	70 dBA	No
Sheldon Street	North of Telfair Avenue[3]	65.5	65.9	0.4	+1 dBA	No
Sheldon Street	South of San Fernando Road[5]	67.8	68.2	0.4	70 dBA	No
San Fernando Road	West of Sheldon Street[5]	69.4	69.8	0.4	+1 dBA	No
San Fernando Road	West of Branford Street[6]	62.2	62.6	0.4	65 dBA	No

Notes:
[1] Distance to nearest receptor shown in Table E, does not take into account existing noise barriers.
[2] Nearest sensitive receptor is a park.
[3] Nearest sensitive receptor is residential
[4] Nearest sensitive receptor is a school.
[5] Nearest sensitive receptor is a hospital.
[6] Nearest sensitive receptor is a motel.
Source: FHWA Traffic Noise Prediction Model FHWA-RD-77-108.

Table K shows that for the Alternative Route 3 conditions, the proposed project's noise increases to the nearby sensitive receptors from the generation of additional vehicular traffic would not exceed the increase thresholds detailed above. Furthermore, the proposed project would not cause the noise level at any nearby land use to exceed the normally compatible noise standard for the with project condition that did not already exceed the standards for the without project condition. Roadway noise impacts would be less than significant for Alternative Route 3.

Alternative Route 4 Conditions

Alternative Route 4, would consist of use of Cal-Mat Pit only. The potential offsite noise impacts have been calculated through a comparison of the Existing scenario to the Existing Plus Alternative Route 4 scenario. The results of this comparison are shown in Table L.

Table L – Alternative Route 4 Project Traffic Noise Contributions

		dBA CNEL at Nearest Receptor[1]				
Roadway	**Segment**	**Existing**	**Existing Plus Alternative 4**	**Project Contribution**	**Threshold**	**Exceeds Threshold ?**
Arleta Avenue	North of Devonshire Street[2]	58.9	59.2	0.3	70 dBA	No
Arleta Avenue	East of Devonshire Street[3]	66.6	66.8	0.2	+1 dBA	No
Paxton Street	North of Arleta Avenue[3]	66.0	66.3	0.3	+1 dBA	No
Paxton Street	North of I-5 Northbound Ramps[3]	67.1	67.3	0.2	+1 dBA	No
Laurel Canyon Boulevard	West of I-5 Southbound Ramps[2]	66.9	67.2	0.3	70 dBA	No
Laurel Canyon Boulevard	West of I-5 Northbound Off-Ramp[3]	66.5	66.7	0.2	+1 dBA	No
Branford Street	North of Laurel Canyon Boulevard[3]	65.9	66.1	0.2	+1 dBA	No
Branford Street	South of San Fernando Road[3]	62.9	63.2	0.3	+2 dBA	No
Sheldon Street	North of I-5 Northbound On-Ramp[3]	65.8	66.1	0.3	+1 dBA	No
Sheldon Street	North of Haddon Avenue[4]	67.8	68.1	0.3	70 dBA	No
Sheldon Street	North of Telfair Avenue[3]	65.5	66.0	0.5	+1 dBA	No
Sheldon Street	South of San Fernando Road[5]	67.8	68.0	0.2	70 dBA	No
San Fernando Road	West of Sheldon Street[5]	69.4	69.7	0.3	+1 dBA	No
San Fernando Road	West of Branford Street[6]	62.2	62.5	0.3	65 dBA	No

Notes:
[1] Distance to nearest receptor shown in Table E, does not take into account existing noise barriers.
[2] Nearest sensitive receptor is a park.
[3] Nearest sensitive receptor is residential
[4] Nearest sensitive receptor is a school.
[5] Nearest sensitive receptor is a hospital.
[6] Nearest sensitive receptor is a motel.
Source: FHWA Traffic Noise Prediction Model FHWA-RD-77-108.

Table L shows that for the Alternative Route 4 conditions, the proposed project's noise increases to the nearby sensitive receptors from the generation of additional vehicular traffic would not exceed the increase thresholds detailed above. Furthermore, the proposed project would not cause the noise level at any nearby land use to exceed the normally compatible noise standard for the with project condition that did not already exceed the standards for the without project condition. Roadway noise impacts would be less than significant for Alternative Route 4.

Operation-Related Noise

The on-going operation of the proposed project would not result in a long-term increase in noise impacts. Currently, the project site requires occasional periodic visits from LACFCD staff and result in noise impacts from the vehicle transporting the workers to and from the project site. Implementation of the proposed project would not result in any additional site visits from LACFCD staff. Therefore, implementation of the proposed project would not increase operational-related noise impacts from the existing condition and would result in no impact.

Level of Significance

Less than significant impact during construction, no impact during operation.

7.3 Generation of Excessive Groundborne Vibration

The proposed project would not expose persons to or generation of excessive groundborne vibration or groundborne noise levels. The following section analyzes the potential vibration impacts associated with the construction and operation of the proposed project.

Construction-Related Vibration Impacts

The construction activities for the proposed project are anticipated to include intake structure improvements, removal of sediment and reconfiguration of the spreading basins and the proposed improvements are anticipated to require the use of bulldozers, hoe rams (for concrete demolition), excavators, water trucks, a street sweeper, and dump trucks. The nearest sensitive receptors of vibration impacts to the project site are single-family homes as near as 35 feet southwest of the proposed improvements to the spreading grounds.

Since neither the City of Los Angeles General Plan or Municipal Code provide any vibration standards for construction activities, Caltrans guidance that is detailed in Section 4.2 has been utilized, which defines the threshold of perception from transient sources at 0.25 inch per second PPV.

The primary source of vibration during construction would be from the operation of bulldozers and from hoe rams. From Table H above, both large bulldozers and hoe rams would create a vibration level of 0.089 inch per second PPV at 25 feet. Based on typical propagation rates, the vibration level at the nearest offsite receptor would be 0.061 inch per second PPV. The vibration level at the nearest vibration sensitive offsite receptor would be within the 0.25 inch per second PPV threshold detailed above. Therefore, a less than significant vibration impact is anticipated from construction of the proposed project.

Operation-Related Vibration Impacts

The on-going operation of the proposed project would not result in an increase in operations related vibration impacts. Currently, the project site requires annual maintenance including the use of bulldozers within the spreading basins. The annual maintenance at the project site will not increase as a result of the proposed project. Therefore, no vibration impact is anticipated from the operation of the proposed project.

Level of Significance

Less than significant impact during construction, no impact during operation.

7.4 Permanent Substantial Noise Level Increase

The ongoing operation of the proposed project would not result in a substantial permanent increase in ambient noise levels in the project vicinity above existing levels without the proposed project. As detailed in Section 7.3, the project site currently requires occasional periodic visits from LACDPW staff and result in noise impacts from the vehicle transporting the workers to and from the project site. Implementation of the proposed project would not result in any additional site visits from LACFCD staff. Therefore, the proposed project would not result in a substantial permanent increase in ambient noise levels and there would be no impact.

Level of Significance

No impact.

7.5 Temporary Substantial Noise Level Increase

Noise impacts from construction activities associated with the proposed project would be a function of the noise generated by construction equipment, equipment location, sensitivity of nearby land uses, and the timing and duration of the construction activities. The proposed project would not create a substantial temporary or periodic increase in ambient noise levels in the project vicinity above noise levels existing without the proposed project. The construction activities for the proposed project are anticipated to require the use of two bulldozers, two excavators, three water trucks, a street sweeper, and 11 dump trucks; however, no more than four dump trucks are anticipated to be operating on the project site at any one time. In addition, a mounted impact hammer would be used on an excavator to demolish the existing diversion channel intake system. The nearest sensitive receptors to the project site have been detailed above in Section 1.4, which found the nearest sensitive receptors to the spreading basin are single-family homes and a church as near as 35 feet from the proposed improvements to Basin 6 and Devonwood Park located as near as 30 feet west of the proposed improvements to Basin 6. Since the construction equipment utilized on the diversion channel demolition would be different than what would be utilized on the spreading basin improvements, the nearest home to the diversion channel has also been analyzed.

Section 41.40(a) of the City of Los Angeles Municipal Code exempts construction activities from the City's noise standards provided construction activities do not take place between the hours of 9:00 p.m. and 7:00 a.m. The analysis above in Section 7.2 found that the proposed project would conform to, and be more restrictive than, the City construction hour limits. However, the City Municipal Code does not provide quantitative limits to the noise levels that may be created from construction activities. Even with adherence to the City standards for construction hours, the resultant construction noise levels may result in a significant substantial temporary noise increase to the nearby offsite receptors.

In order to determine if the proposed construction activities would create a significant substantial temporary noise increase, the FTA construction noise criteria thresholds detailed above in Section 4.1 have been utilized. The FTA construction daytime noise thresholds limits noise exposure to the nearby homes to 80 dB or less over eight continuous hours or 90 dB or less over one continuous hour and this standard has been utilized to analyze the construction noise impacts to all of the offsite receptors. According to the project applicant, construction activities at the spreading basins would consist of the use of bulldozers and excavators that would be constantly moving and would result in activities occurring near any nearby sensitive receptor limited to less than one hour intervals and therefore the 1-hour construction noise threshold was utilized for the receptors next to the Spreading Basin. The demolition activities at the Diversion Channel would require the use of excavators with mounted impact hammers or hoe rams to break up the existing concrete and the demolition activities would have the potential of occurring in the same general proximity for 8-hour durations and therefore the 8-hour construction noise

threshold was utilized for the receptor next to the diversion channel. The results are shown below in Table M and the RCNM printouts are provided in Appendix B.

Table M – Unmitigated Worst-Case Construction Noise Levels at Nearest Property Lines

Sensitive Receptor	Distance to Receptor (feet)	Construction Noise Level (dBA Leq)	Threshold[1] (dBA Leq)	Exceed Threshold?
Devonwood Park	30	83	90	No
Nearest Home and Church to Spreading Basin	35	82	90	No
Nearest Home to Diversion Channel	40	86	80	**Yes**

Notes:
[1] Threshold for spreading basin activities based on FTA 1-hour daytime standard of 90 dBA Leq and threshold for Diversion Channel activities based on FTA 8-hour daytime standard of 80 dBA Leq.
Source: RCNM, Federal Highway Administration, 2006

Table M shows that greatest noise impacts would occur at the nearest homes to the Diversion Channel demolition activities, with a noise level as high as 86 dBA Leq at the nearest offsite residential use. Table M shows that the noise levels from Diversion Channel demolition activities would exceed the 80 dB 8-hour threshold detailed above. This would be considered a significant impact.

Mitigation Measure 1 is provided that would require the County of Los Angeles Department of Public Works to install an 8-foot high temporary sound wall along the shared property line with the nearby homes located northwest of the Diversion Channel Improvements. The temporary sound wall shall extend a minimum of 100 feet past the extent of the Diversion Channel demolition activities and shall be constructed of minimum ½-inch plywood or OSB. The temporary sound wall shall be installed prior to the start of demolition activities and shall remain until the completion of the Diversion Channel improvements.

The 8-foot height was utilized, since that is the height required to break the line-of-sight between the proposed construction equipment and a person standing in the backyard in the nearby homes. According to Caltrans *Technical Noise Supplement*, November 2009, a sound wall that is tall enough to break the line-of-sight between the proposed equipment and receiver would provide approximately 7 dB of noise reduction. This would result in a noise level of 79 dBA Leq at the nearest homes to the Diversion Channel demolition activities and would be within the 80 dBA Leq 8-hour standard for noise sources that would occur in the same location for 8-hours. It should also be noted that most of the demolition work would occur with the equipment located inside the intake canal, that is located as much as 20 feet below the grade of the surrounding receptors and this additional grade difference would provide additional sound attenuation. Therefore, with implementation of Mitigation Measure 1, a less than significant construction noise impact would occur from development of the proposed project.

Level of Significance Before Mitigation

Potentially significant impact.

Mitigation Measures

Mitigation Measure 1:

The County of Los Angeles Department of Public Works shall construct a 8-foot high temporary sound wall along the shared property line with the nearby homes located northwest of the Diversion Channel Improvements. The temporary sound wall shall extend a minimum of 100 feet past the extent of the Diversion Channel demolition activities and shall be constructed of minimum ½-inch plywood or OSB. The temporary sound wall shall be installed prior to the start

of demolition activities and shall remain until the completion of the Diversion Channel improvements.

Level of Significance After Mitigation

Less than significant impact.

7.6 Aircraft Noise

The proposed project would not expose people residing or working in the project area to excessive noise levels from aircraft. The nearest airport is Whiteman Airport, located approximately 1.5 mile east of the project site. The project site is located outside of the 65 dBA CNEL noise contours of any airport and the site observations during the noise measurements determined that aircraft create minimal noise impacts at the project site. Furthermore, the proposed project would not introduce any new sensitive receptors to the project site or surrounding area. Impacts would be less than significant.

Level of Significance

Less than significant impact.

8.0 REFERENCES

California Department of Transportation, *2012 Annual Average Daily Truck Traffic on the California State Highway System*, 2014.

California Department of Transportation (Caltrans), *Technical Noise Supplement*, November 2009.

California Department of Transportation, *Transportation- and Construction-Induced Vibration Guidance Manual*, June, 2004

City of Los Angeles, *Noise Element of the Los Angeles City General Plan,* November, 1998.

City of Los Angeles, *Official City of Los Angeles Municipal Code Sixth Edition,* June 30, 2014.

Federal Transit Administration, *Transit Noise and Vibration Impact Assessment,* May 2006.

Linscott Law & Greenspan, *Traffic Impact Study Pacoima Spreading Grounds Improvement Project,* May 20, 2015.

U.S. Department of Transportation, *FHWA Roadway Construction Noise Model User's Guide,* January, 2006.

APPENDIX A

Study Area Photo Index

Noise Measurement Site 1 - looking north

Noise Measurement Site 1 - looking northeast

Noise Measurement Site 1 - looking east

Noise Measurement Site 1 - looking southeast

Noise Measurement Site 1 - looking south

Noise Measurement Site 1 - looking southwest

Noise Measurement Site 1 - looking west

Noise Measurement Site 1 - looking northwest

Noise Measurement Site 2 - looking north

Noise Measurement Site 2 - looking northeast

Noise Measurement Site 2 - looking east

Noise Measurement Site 2 - looking southeast

Noise Measurement Site 2 - looking south

Noise Measurement Site 2 - looking southwest

Noise Measurement Site 2 - looking west

Noise Measurement Site 2 - looking northwest

Noise Measurement Site 3 - looking north

Noise Measurement Site 3 - looking northeast

Noise Measurement Site 3 - looking east

Noise Measurement Site 3 - looking southeast

Noise Measurement Site 3 - looking south

Noise Measurement Site 3 - looking southwest

Noise Measurement Site 3 - looking west

Noise Measurement Site 3 - looking northwest

Noise Measurement Site 4 - looking north

Noise Measurement Site 4 - looking northeast

Noise Measurement Site 4 - looking east

Noise Measurement Site 4 - looking southeast

Noise Measurement Site 4 - looking south

Noise Measurement Site 4 - looking southwest

Noise Measurement Site 4 - looking west

Noise Measurement Site 4 - looking northwest

APPENDIX B

Field Noise Measurement Printouts

General Information

Serial Number	02509
Model	831
Firmware Version	2.112
Filename	831_Data.001
User	GT
Job Description	Pacoima Spreading Grounds Improvements Project
Location	SW Corner of Intake Struckture Improvements

Measurement Description	
Start Time	Tuesday, 2014 August 19 12:19:19
Stop Time	Tuesday, 2014 August 19 12:33:49
Duration	00:14:30.2
Run Time	00:14:30.2
Pause	00:00:00.0
Pre Calibration	Tuesday, 2014 August 19 12:15:55
Post Calibration	None
Calibration Deviation	---

Note

Noise primarily from I-5 and aircraft
79F, 28.88 in Hg, 47% Hu, 4 mph wind, partly cloudy

Overall Data

LAeq		56.9	dB
LASmax	2014 Aug 19 12:32:22	69.5	dB
LApeak (max)	2014 Aug 19 12:31:56	90.6	dB
LASmin	2014 Aug 19 12:22:52	50.9	dB
LCeq		66.4	dB
LAeq		56.9	dB
LCeq - LAeq		9.5	dB
LAIeq		63.1	dB
LAeq		56.9	dB
LAIeq - LAeq		6.2	dB
Ldn		56.9	dB
LDay 07:00-23:00		56.9	dB
LNight 23:00-07:00		---	dB
Lden		56.9	dB
LDay 07:00-19:00		56.9	dB
LEvening 19:00-23:00		---	dB
LNight 23:00-07:00		---	dB
LAE		86.3	dB
# Overloads		0	
Overload Duration		0.0	s
# OBA Overloads		0	
OBA Overload Duration		0.0	s

Statistics

LAS5.00	62.7	dBA
LAS10.00	58.9	dBA
LAS33.30	55.1	dBA
LAS50.00	54.2	dBA
LAS66.60	53.6	dBA
LAS90.00	52.4	dBA

LAS > 65.0 dB (Exceedence Counts / Duration)	9 / 33.2	s
LAS > 85.0 dB (Exceedence Counts / Duration)	0 / 0.0	s
LApeak > 135.0 dB (Exceedence Counts / Duration)	0 / 0.0	s
LApeak > 137.0 dB (Exceedence Counts / Duration)	0 / 0.0	s
LApeak > 140.0 dB (Exceedence Counts / Duration)	0 / 0.0	s

Settings

RMS Weight	A Weighting	
Peak Weight	A Weighting	
Detector	Slow	
Preamp	PRM831	
Integration Method	Linear	
OBA Range	Normal	
OBA Bandwidth	1/1 and 1/3	
OBA Freq. Weighting	Z Weighting	
OBA Max Spectrum	Bin Max	
Gain	+0	dB

Under Range Limit	26.2	dB
Under Range Peak	75.6	dB
Noise Floor	17.0	dB
Overload	143.2	dB

1/1 Spectra

Freq. (Hz):	8.0	16.0	31.5	63.0	125	250	500	1k	2k	4k	8k	16k
LZeq	65.6	66.0	61.2	61.6	60.7	53.6	55.6	53.4	46.4	38.4	39.6	42.9
LZSmax	80.9	75.8	68.0	72.1	74.7	65.2	70.2	66.8	58.6	51.6	49.9	45.6
LZSmin	53.9	56.5	54.3	54.2	52.0	47.9	46.3	48.0	41.9	36.7	39.3	42.7

1/3 Spectra

Freq. (Hz):	6.3	8.0	10.0	12.5	16.0	20.0	25.0	31.5	40.0	50.0	63.0	80.0
LZeq	62.3	60.2	59.7	60.9	62.6	59.7	57.6	56.1	55.2	55.4	57.0	57.7
LZSmax	78.6	74.8	77.5	73.4	72.5	69.1	66.1	64.0	63.2	67.5	70.4	71.8
LZSmin	43.5	46.0	46.3	49.9	50.8	49.8	49.3	48.3	48.1	49.0	48.9	47.8

Freq. (Hz):	100	125	160	200	250	315	400	500	630	800	1k	1.25k
LZeq	57.7	56.1	52.4	50.0	48.6	47.5	49.1	53.5	47.7	49.9	48.5	46.9
LZSmax	74.8	74.1	65.6	64.2	58.0	57.7	64.6	69.8	60.4	65.1	62.9	58.7
LZSmin	47.5	46.6	44.6	43.1	42.5	40.6	40.6	41.2	41.2	43.1	43.6	42.1

Freq. (Hz):	1.6k	2k	2.5k	3.15k	4k	5k	6.3k	8k	10k	12.5k	16k	20k
LZeq	44.1	41.0	36.5	34.4	33.3	33.1	33.7	34.7	35.9	36.9	37.8	39.5
LZSmax	56.5	55.7	48.6	50.2	46.7	44.9	45.4	45.9	43.3	41.4	40.9	40.3
LZSmin	39.3	36.3	33.4	31.8	31.4	32.1	33.1	34.2	35.5	36.6	37.5	39.3

Calibration History

Preamp	Date	dB re. 1V/Pa
PRM831	19 Aug 2014 12:15:52	-25.6
PRM831	12 Aug 2014 17:21:24	-26.0
PRM831	17 Jul 2014 15:40:25	-24.9
PRM831	15 May 2014 16:06:19	-25.8
PRM831	14 May 2014 15:41:45	-25.3
PRM831	05 May 2014 14:04:40	-26.0
PRM831	16 Jan 2014 14:11:47	-25.9
PRM831	15 Jan 2014 12:49:05	-25.7
PRM831	10 Dec 2013 14:32:57	-25.6
PRM831	25 Oct 2013 11:25:03	-25.8
PRM831	14 Oct 2013 15:34:47	-25.6

General Information

Serial Number	02509
Model	831
Firmware Version	2.112
Filename	831_Data.002
User	GT
Job Description	Pacoima Spreading Grounds Improvements Project
Location	South Side of Devonwood Park 150' east of Woodman Ave CL

Measurement Description	
Start Time	Tuesday, 2014 August 19 12:42:47
Stop Time	Tuesday, 2014 August 19 12:57:49
Duration	00:15:02.1
Run Time	00:15:02.1
Pause	00:00:00.0
Pre Calibration	Tuesday, 2014 August 19 12:15:52
Post Calibration	None
Calibration Deviation	---

Note

Noise primarily from Woodman Ave, kids playing park and aircraft
79F, 28.88 in Hg, 47% Hu, 4 mph wind, partly cloudy

Overall Data

LAeq		54.4	dB
LASmax	2014 Aug 19 12:55:08	69.5	dB
LApeak (max)	2014 Aug 19 12:55:07	87.9	dB
LASmin	2014 Aug 19 12:56:27	43.8	dB
LCeq		66.2	dB
LAeq		54.4	dB
LCeq - LAeq		11.8	dB
LAIeq		56.6	dB
LAeq		54.4	dB
LAIeq - LAeq		2.2	dB
Ldn		54.4	dB
LDay 07:00-23:00		54.4	dB
LNight 23:00-07:00		---	dB
Lden		54.4	dB
LDay 07:00-19:00		54.4	dB
LEvening 19:00-23:00		---	dB
LNight 23:00-07:00		---	dB
LAE		83.9	dB
# Overloads		0	
Overload Duration		0.0	s
# OBA Overloads		0	
OBA Overload Duration		0.0	s

Statistics

LAS5.00	58.4	dBA
LAS10.00	57.2	dBA
LAS33.30	53.9	dBA
LAS50.00	52.3	dBA
LAS66.60	50.6	dBA
LAS90.00	46.7	dBA

LAS > 65.0 dB (Exceedence Counts / Duration)	2 / 9.4	s
LAS > 85.0 dB (Exceedence Counts / Duration)	0 / 0.0	s
LApeak > 135.0 dB (Exceedence Counts / Duration)	0 / 0.0	s
LApeak > 137.0 dB (Exceedence Counts / Duration)	0 / 0.0	s
LApeak > 140.0 dB (Exceedence Counts / Duration)	0 / 0.0	s

Settings

RMS Weight	A Weighting	
Peak Weight	A Weighting	
Detector	Slow	
Preamp	PRM831	
Integration Method	Linear	
OBA Range	Normal	
OBA Bandwidth	1/1 and 1/3	
OBA Freq. Weighting	Z Weighting	
OBA Max Spectrum	Bin Max	
Gain	+0	dB

Under Range Limit	26.2	dB
Under Range Peak	75.6	dB
Noise Floor	17.0	dB
Overload	143.2	dB

1/1 Spectra

Freq. (Hz):	8.0	16.0	31.5	63.0	125	250	500	1k	2k	4k	8k	16k
LZeq	68.5	63.8	60.6	62.5	61.0	53.8	50.5	50.0	45.5	40.7	40.5	43.0
LZSmax	82.0	78.5	71.6	79.4	77.4	68.3	69.1	63.6	60.7	57.1	52.2	48.2
LZSmin	47.7	50.8	50.1	50.7	45.6	41.6	38.7	39.6	35.9	36.2	39.4	42.8

1/3 Spectra

Freq. (Hz):	6.3	8.0	10.0	12.5	16.0	20.0	25.0	31.5	40.0	50.0	63.0	80.0
LZeq	65.5	63.4	61.7	60.0	58.2	58.9	55.0	54.5	57.2	58.7	57.4	57.0
LZSmax	78.9	76.4	77.7	76.7	73.7	73.2	69.3	66.0	70.7	79.2	73.2	72.5
LZSmin	38.9	42.2	42.3	45.0	45.3	46.3	45.7	44.9	46.1	44.4	45.9	40.5

Freq. (Hz):	100	125	160	200	250	315	400	500	630	800	1k	1.25k
LZeq	57.1	56.1	55.4	49.6	49.4	46.8	45.3	45.6	46.2	45.8	45.5	44.3
LZSmax	77.3	72.8	73.5	65.6	65.4	62.2	57.4	65.0	66.5	58.9	58.3	58.6
LZSmin	43.8	41.9	39.9	29.6	35.7	28.8	32.7	34.0	34.3	34.7	35.4	33.8

Freq. (Hz):	1.6k	2k	2.5k	3.15k	4k	5k	6.3k	8k	10k	12.5k	16k	20k
LZeq	42.6	40.2	38.3	37.1	35.6	35.0	35.1	35.5	36.4	37.0	37.9	39.6
LZSmax	57.7	54.7	53.9	54.0	50.8	51.3	49.1	47.5	45.5	44.8	43.1	44.0
LZSmin	32.1	30.5	30.1	30.6	31.3	32.1	33.2	34.4	35.7	36.2	37.6	39.4

Calibration History

Preamp	Date	dB re. 1V/Pa
PRM831	19 Aug 2014 12:15:52	-25.6
PRM831	12 Aug 2014 17:21:24	-26.0
PRM831	17 Jul 2014 15:40:25	-24.9
PRM831	15 May 2014 16:06:19	-25.8
PRM831	14 May 2014 15:41:45	-25.3
PRM831	05 May 2014 14:04:40	-26.0
PRM831	16 Jan 2014 14:11:47	-25.9
PRM831	15 Jan 2014 12:49:05	-25.7
PRM831	10 Dec 2013 14:32:57	-25.6
PRM831	25 Oct 2013 11:25:03	-25.8
PRM831	14 Oct 2013 15:34:47	-25.6

General Information

Serial Number	02509
Model	831
Firmware Version	2.112
Filename	831_Data.003
User	GT
Job Description	Pacoima Spreading Grounds Improvements Project
Location	East of Spreading Basins and 125' SW of end of Filmore St

Measurement Description	
Start Time	Tuesday, 2014 August 19 13:16:43
Stop Time	Tuesday, 2014 August 19 13:30:44
Duration	00:14:00.4
Run Time	00:14:00.4
Pause	00:00:00.0
Pre Calibration	Tuesday, 2014 August 19 12:15:52
Post Calibration	None
Calibration Deviation	---

Note

Noise primarily from aircraft and Devonshire St
79F, 28.88 in Hg, 47% Hu, 4 mph wind, partly cloudy

Overall Data

LAeq		49.6	dB
LASmax	2014 Aug 19 13:29:11	62.3	dB
LApeak (max)	2014 Aug 19 13:29:11	80.1	dB
LASmin	2014 Aug 19 13:21:05	42.6	dB
LCeq		62.9	dB
LAeq		49.6	dB
LCeq - LAeq		13.4	dB
LAIeq		52.3	dB
LAeq		49.6	dB
LAIeq - LAeq		2.7	dB
Ldn		49.6	dB
LDay 07:00-23:00		49.6	dB
LNight 23:00-07:00		---	dB
Lden		49.6	dB
LDay 07:00-19:00		49.6	dB
LEvening 19:00-23:00		---	dB
LNight 23:00-07:00		---	dB
LAE		78.8	dB
# Overloads		0	
Overload Duration		0.0	s
# OBA Overloads		0	
OBA Overload Duration		0.0	s

Statistics

LAS5.00	56.4	dBA
LAS10.00	52.9	dBA
LAS33.30	46.4	dBA
LAS50.00	45.3	dBA
LAS66.60	44.5	dBA
LAS90.00	43.8	dBA

LAS > 65.0 dB (Exceedence Counts / Duration)	0 / 0.0	s
LAS > 85.0 dB (Exceedence Counts / Duration)	0 / 0.0	s
LApeak > 135.0 dB (Exceedence Counts / Duration)	0 / 0.0	s
LApeak > 137.0 dB (Exceedence Counts / Duration)	0 / 0.0	s
LApeak > 140.0 dB (Exceedence Counts / Duration)	0 / 0.0	s

Settings

RMS Weight	A Weighting	
Peak Weight	A Weighting	
Detector	Slow	
Preamp	PRM831	
Integration Method	Linear	
OBA Range	Normal	
OBA Bandwidth	1/1 and 1/3	
OBA Freq. Weighting	Z Weighting	
OBA Max Spectrum	Bin Max	
Gain	+0	dB

Under Range Limit	26.2	dB
Under Range Peak	75.6	dB
Noise Floor	17.0	dB
Overload	143.2	dB

1/1 Spectra

Freq. (Hz):	8.0	16.0	31.5	63.0	125	250	500	1k	2k	4k	8k	16k
LZeq	66.5	62.5	57.9	59.0	56.5	51.3	48.1	44.0	38.2	37.0	39.8	42.9
LZSmax	82.6	82.6	71.4	70.8	70.9	65.8	62.2	58.0	50.5	47.6	45.1	43.8
LZSmin	51.6	51.4	49.0	52.9	46.8	39.9	38.9	39.0	35.2	36.0	39.3	42.8

1/3 Spectra

Freq. (Hz):	6.3	8.0	10.0	12.5	16.0	20.0	25.0	31.5	40.0	50.0	63.0	80.0
LZeq	63.3	61.4	59.9	58.5	56.8	58.1	54.3	51.6	52.4	52.6	54.5	55.1
LZSmax	78.6	77.4	81.4	80.2	76.0	76.2	67.4	64.1	67.4	64.9	70.1	64.9
LZSmin	41.9	43.3	45.8	45.7	44.2	46.2	42.8	43.1	43.1	43.4	45.0	48.1

Freq. (Hz):	100	125	160	200	250	315	400	500	630	800	1k	1.25k
LZeq	52.9	52.0	50.1	46.9	46.1	46.6	45.0	42.8	41.1	40.8	38.7	37.5
LZSmax	70.6	64.8	64.3	60.9	60.6	62.0	60.0	57.9	55.6	56.3	55.4	53.2
LZSmin	42.4	40.0	39.8	35.6	34.5	34.2	34.0	34.3	32.6	35.1	34.0	32.7

Freq. (Hz):	1.6k	2k	2.5k	3.15k	4k	5k	6.3k	8k	10k	12.5k	16k	20k
LZeq	35.0	32.7	31.7	31.7	32.1	32.7	34.0	35.1	36.0	36.8	37.8	39.6
LZSmax	48.8	45.3	44.0	42.8	43.9	43.7	42.3	41.4	39.0	38.4	38.7	39.9
LZSmin	31.1	29.8	29.7	30.3	31.1	32.0	33.1	34.3	35.7	36.6	37.5	39.3

Calibration History

Preamp	Date	dB re. 1V/Pa
PRM831	19 Aug 2014 12:15:52	-25.6
PRM831	12 Aug 2014 17:21:24	-26.0
PRM831	17 Jul 2014 15:40:25	-24.9
PRM831	15 May 2014 16:06:19	-25.8
PRM831	14 May 2014 15:41:45	-25.3
PRM831	05 May 2014 14:04:40	-26.0
PRM831	16 Jan 2014 14:11:47	-25.9
PRM831	15 Jan 2014 12:49:05	-25.7
PRM831	10 Dec 2013 14:32:57	-25.6
PRM831	25 Oct 2013 11:25:03	-25.8
PRM831	14 Oct 2013 15:34:47	-25.6

General Information

Serial Number	02509
Model	831
Firmware Version	2.112
Filename	831_Data.004
User	GT
Job Description	Pacoima Spreading Grounds Improvements Project
Location	At Sun Valley HS 50' SE of Sheldon St CL + 100' SW of Telfair Av

Measurement Description	
Start Time	Tuesday, 2014 August 19 13:50:02
Stop Time	Tuesday, 2014 August 19 14:03:03
Duration	00:13:00.5
Run Time	00:13:00.5
Pause	00:00:00.0
Pre Calibration	Tuesday, 2014 August 19 12:15:52
Post Calibration	None
Calibration Deviation	---

Note

Noise primarily from Sheldon St, Telfair Av and children
81 F, 28.90 in Hg, 35% Hu. 2 mph wind, partly cloudy

Overall Data

LAeq		67.3	dB
LASmax	2014 Aug 19 13:51:11	82.0	dB
LApeak (max)	2014 Aug 19 14:02:43	99.9	dB
LASmin	2014 Aug 19 14:01:31	50.2	dB
LCeq		77.7	dB
LAeq		67.3	dB
LCeq - LAeq		10.4	dB
LAIeq		69.2	dB
LAeq		67.3	dB
LAIeq - LAeq		1.9	dB
Ldn		67.3	dB
LDay 07:00-23:00		67.3	dB
LNight 23:00-07:00		---	dB
Lden		67.3	dB
LDay 07:00-19:00		67.3	dB
LEvening 19:00-23:00		---	dB
LNight 23:00-07:00		---	dB
LAE		96.2	dB
# Overloads		0	
Overload Duration		0.0	s
# OBA Overloads		0	
OBA Overload Duration		0.0	s

Statistics

LAS5.00	72.8	dBA
LAS10.00	70.4	dBA
LAS33.30	66.7	dBA
LAS50.00	64.5	dBA
LAS66.60	62.0	dBA
LAS90.00	57.0	dBA
LAS > 65.0 dB (Exceedence Counts / Duration)	33 / 433.6	s
LAS > 85.0 dB (Exceedence Counts / Duration)	0 / 0.0	s
LApeak > 135.0 dB (Exceedence Counts / Duration)	0 / 0.0	s
LApeak > 137.0 dB (Exceedence Counts / Duration)	0 / 0.0	s
LApeak > 140.0 dB (Exceedence Counts / Duration)	0 / 0.0	s

Settings

RMS Weight	A Weighting	
Peak Weight	A Weighting	
Detector	Slow	
Preamp	PRM831	
Integration Method	Linear	
OBA Range	Normal	
OBA Bandwidth	1/1 and 1/3	
OBA Freq. Weighting	Z Weighting	
OBA Max Spectrum	Bin Max	
Gain	+0	dB
Under Range Limit	26.2	dB
Under Range Peak	75.6	dB
Noise Floor	17.0	dB
Overload	143.2	dB

1/1 Spectra

Freq. (Hz):	8.0	16.0	31.5	63.0	125	250	500	1k	2k	4k	8k	16k
LZeq	69.0	68.4	70.3	75.6	70.6	67.2	64.9	62.8	57.7	51.2	49.2	48.4
LZSmax	85.7	86.4	83.6	95.1	84.6	85.6	82.2	75.0	68.3	64.7	72.9	71.5
LZSmin	52.9	53.8	51.5	57.5	55.0	49.2	45.7	45.4	40.1	36.8	39.5	42.8

1/3 Spectra

Freq. (Hz):	6.3	8.0	10.0	12.5	16.0	20.0	25.0	31.5	40.0	50.0	63.0	80.0
LZeq	66.0	63.2	63.2	62.5	63.8	64.4	63.9	67.0	64.6	72.1	71.3	69.2
LZSmax	83.9	80.6	79.2	79.3	84.0	81.3	81.6	83.2	78.8	95.7	86.4	87.3
LZSmin	43.9	45.4	45.4	47.0	47.8	42.4	48.8	49.1	51.3	55.6	57.3	52.9

Freq. (Hz):	100	125	160	200	250	315	400	500	630	800	1k	1.25k
LZeq	65.7	66.9	64.4	62.2	62.5	62.6	61.0	59.8	59.3	59.1	58.4	56.4
LZSmax	81.1	84.3	80.0	78.8	78.5	84.6	80.8	73.0	72.4	70.5	74.9	66.7
LZSmin	48.5	31.0	46.7	39.3	43.2	41.7	40.8	41.2	39.8	41.0	40.9	38.9

Freq. (Hz):	1.6k	2k	2.5k	3.15k	4k	5k	6.3k	8k	10k	12.5k	16k	20k
LZeq	54.9	52.4	50.2	48.2	45.9	44.3	42.0	47.7	38.9	38.2	46.9	41.6
LZSmax	65.4	64.7	64.1	62.3	59.5	63.1	57.5	72.8	51.4	51.9	71.5	61.3
LZSmin	37.0	34.6	32.7	31.9	31.9	32.4	33.5	34.4	35.9	36.7	37.6	39.4

Calibration History

Preamp	Date	dB re. 1V/Pa
PRM831	19 Aug 2014 12:15:52	-25.6
PRM831	12 Aug 2014 17:21:24	-26.0
PRM831	17 Jul 2014 15:40:25	-24.9
PRM831	15 May 2014 16:06:19	-25.8
PRM831	14 May 2014 15:41:45	-25.3
PRM831	05 May 2014 14:04:40	-26.0
PRM831	16 Jan 2014 14:11:47	-25.9
PRM831	15 Jan 2014 12:49:05	-25.7
PRM831	10 Dec 2013 14:32:57	-25.6
PRM831	25 Oct 2013 11:25:03	-25.8
PRM831	14 Oct 2013 15:34:47	-25.6

APPENDIX C

FHWA Model Traffic Noise Contour Calculations

FHWA-RD-77-108 HIGHWAY TRAFFIC NOISE PREDICTION MODEL

Scenario: EXISTING CONDITIONS

Project: Pacoima Spreading Grounds
Site Conditions: Soft

	Vehicle Mix 1 (Arterials)				Vehicle Mix 2 (Arterial With Project)				Vehicle Mix 3 (I-5)			
Vehicle Type	Day	Evening	Night	Daily	Day	Evening	Night	Daily	Day	Evenin	Night	Daily
Automobiles	69.50%	12.90%	9.60%	92.00%	67.50%	12.51%	9.31%	89.32%	63.84%	13.08%	15.31%	92.23%
Medium Trucks	1.44%	0.06%	1.50%	3.00%	1.40%	0.06%	1.45%	2.91%	1.22%	0.22%	0.62%	2.07%
Heavy Trucks	2.40%	0.10%	2.50%	5.00%	5.32%	0.10%	2.42%	7.85%	3.12%	0.30%	2.28%	5.70%

Road Name: Arleta Avenue **Segment: North of Devonshire Street**

Average Daily Traffic: 13950 Vehicles Vehicle Speed: 40 MPH Vehicle Mix: 1 Roadway Classification: Secondary

	NOISE PARAMETERS AT 150 FEET FROM CENTERLINE (Equiv. Lane Dist: 148.07 ft)										**Centerline Distance to**		
	Noise Adjustments				**Unmitigated Noise Levels**						**Noise Contour (in feet)**		
Vehicle Type	REMEL	Traffic Adj.	Dist Adj.	Finite Adj	Leq Peak	Leq Day	Leq Eve.	Leq Night	Ldn	CNEL		Ldn	CNEL
Automobiles	67.36	-0.24	-7.18	-1.20	58.74	56.37	55.08	49.02	57.45	58.08	70 dBA:	**25**	**27**
Medium Trucks	76.31	-15.11	-7.18	-1.20	52.83	33.62	25.84	35.05	41.20	41.23	65 dBA:	**54**	**58**
Heavy Trucks	81.16	-12.89	-7.18	-1.20	59.89	42.90	35.12	44.33	50.48	50.52	60 dBA:	**116**	**126**
				Total:	**62.82**	**56.58**	**55.13**	**50.42**	**58.33**	**58.86**	55 dBA:	**250**	**271**

Road Name: Arleta Avenue **Segment: East of Devonshire Street**

Average Daily Traffic: 18950 Vehicles Vehicle Speed: 40 MPH Vehicle Mix: 1 Roadway Classification: Secondary

	NOISE PARAMETERS AT 60 FEET FROM CENTERLINE (Equiv. Lane Dist: 54.99 ft)										**Centerline Distance to**		
	Noise Adjustments				**Unmitigated Noise Levels**						**Noise Contour (in feet)**		
Vehicle Type	REMEL	Traffic Adj.	Dist Adj.	Finite Adj	Leq Peak	Leq Day	Leq Eve.	Leq Night	Ldn	CNEL		Ldn	CNEL
Automobiles	67.36	1.09	-0.72	-1.20	66.52	64.15	62.86	56.80	65.24	65.87	70 dBA:	**33**	**36**
Medium Trucks	76.31	-13.78	-0.72	-1.20	60.61	41.40	33.62	42.83	48.98	49.02	65 dBA:	**71**	**77**
Heavy Trucks	81.16	-11.56	-0.72	-1.20	67.68	50.69	42.90	52.11	58.27	58.30	60 dBA:	**153**	**166**
				Total:	**70.61**	**64.37**	**62.91**	**58.20**	**66.12**	**66.64**	55 dBA:	**331**	**358**

Road Name: Paxton Street **Segment: North of Arleta Avenue**

Average Daily Traffic: 13950 Vehicles Vehicle Speed: 40 MPH Vehicle Mix: 1 Roadway Classification: Secondary

	NOISE PARAMETERS AT 55 FEET FROM CENTERLINE (Equiv. Lane Dist: 49.49 ft)										**Centerline Distance to**		
	Noise Adjustments				**Unmitigated Noise Levels**						**Noise Contour (in feet)**		
Vehicle Type	REMEL	Traffic Adj.	Dist Adj.	Finite Adj	Leq Peak	Leq Day	Leq Eve.	Leq Night	Ldn	CNEL		Ldn	CNEL
Automobiles	67.36	-0.24	-0.04	-1.20	65.88	63.51	62.22	56.16	64.59	65.22	70 dBA:	**27**	**30**
Medium Trucks	76.31	-15.11	-0.04	-1.20	59.97	40.76	32.98	42.19	48.34	48.37	65 dBA:	**59**	**64**
Heavy Trucks	81.16	-12.89	-0.04	-1.20	67.03	50.04	42.26	51.47	57.62	57.66	60 dBA:	**127**	**138**
				Total:	**69.96**	**63.72**	**62.26**	**57.56**	**65.47**	**66.00**	55 dBA:	**275**	**298**

FHWA-RD-77-108 HIGHWAY TRAFFIC NOISE PREDICTION MODEL

Scenario: EXISTING CONDITIONS

Project: Pacoima Spreading Grounds
Site Conditions: Soft

Road Name: Paxton Street **Segment: North of I-5 Northbound Ramps**

Average Daily Traffic: 14920 Vehicles Vehicle Speed: 40 MPH Vehicle Mix: 1 Roadway Classification: Secondary

	NOISE PARAMETERS AT 50 FEET FROM CENTERLINE (Equiv. Lane Dist: 43.86 ft)										**Centerline Distance to**		
	Noise Adjustments				**Unmitigated Noise Levels**						**Noise Contour (in feet)**		
Vehicle Type	REMEL	Traffic Adj.	Dist Adj.	Finite Adj	Leq Peak	Leq Day	Leq Eve.	Leq Night	Ldn	CNEL		Ldn	CNEL
Automobiles	67.36	0.05	0.75	-1.20	66.96	64.59	63.29	57.24	65.67	66.30	70 dBA:	**29**	**32**
Medium Trucks	76.31	-14.82	0.75	-1.20	61.05	41.84	34.06	43.26	49.42	49.45	65 dBA:	**63**	**69**
Heavy Trucks	81.16	-12.60	0.75	-1.20	68.11	51.12	43.34	52.55	58.70	58.74	60 dBA:	**137**	**148**
				Total:	**71.04**	**64.80**	**63.34**	**58.64**	**66.55**	**67.08**	55 dBA:	**294**	**319**

Road Name: Laurel Canyon Boulevard **Segment: West of I-5 Southbound Ramps**

Average Daily Traffic: 21680 Vehicles Vehicle Speed: 35 MPH Vehicle Mix: 1 Roadway Classification: Major

	NOISE PARAMETERS AT 55 FEET FROM CENTERLINE (Equiv. Lane Dist: 46.1 ft)										**Centerline Distance to**		
	Noise Adjustments				**Unmitigated Noise Levels**						**Noise Contour (in feet)**		
Vehicle Type	REMEL	Traffic Adj.	Dist Adj.	Finite Adj	Leq Peak	Leq Day	Leq Eve.	Leq Night	Ldn	CNEL		Ldn	CNEL
Automobiles	65.11	2.25	0.43	-1.20	66.59	64.22	62.92	56.87	65.30	65.93	70 dBA:	**32**	**34**
Medium Trucks	74.83	-12.61	0.43	-1.20	61.44	42.23	34.45	43.66	49.81	49.85	65 dBA:	**68**	**74**
Heavy Trucks	80.05	-10.40	0.43	-1.20	68.88	51.89	44.11	53.31	59.47	59.50	60 dBA:	**147**	**159**
				Total:	**71.36**	**64.49**	**62.99**	**58.60**	**66.40**	**66.91**	55 dBA:	**317**	**342**

Road Name: Laurel Canyon Boulevard **Segment: West of I-5 Northbound Off-Ramp**

Average Daily Traffic: 19560 Vehicles Vehicle Speed: 35 MPH Vehicle Mix: 1 Roadway Classification: Major

	NOISE PARAMETERS AT 55 FEET FROM CENTERLINE (Equiv. Lane Dist: 46.1 ft)										**Centerline Distance to**		
	Noise Adjustments				**Unmitigated Noise Levels**						**Noise Contour (in feet)**		
Vehicle Type	REMEL	Traffic Adj.	Dist Adj.	Finite Adj	Leq Peak	Leq Day	Leq Eve.	Leq Night	Ldn	CNEL		Ldn	CNEL
Automobiles	65.11	1.81	0.43	-1.20	66.14	63.77	62.48	56.42	64.85	65.48	70 dBA:	**30**	**32**
Medium Trucks	74.83	-13.06	0.43	-1.20	60.99	41.78	34.00	43.21	49.37	49.40	65 dBA:	**64**	**69**
Heavy Trucks	80.05	-10.84	0.43	-1.20	68.43	51.44	43.66	52.87	59.02	59.05	60 dBA:	**137**	**148**
				Total:	**70.91**	**64.04**	**62.54**	**58.15**	**65.96**	**66.46**	55 dBA:	**296**	**319**

Road Name: Branford Street **Segment: North of Laurel Canyon Boulevard**

Average Daily Traffic: 15840 Vehicles Vehicle Speed: 35 MPH Vehicle Mix: 1 Roadway Classification: Secondary

	NOISE PARAMETERS AT 50 FEET FROM CENTERLINE (Equiv. Lane Dist: 43.86 ft)										**Centerline Distance to**		
	Noise Adjustments				**Unmitigated Noise Levels**						**Noise Contour (in feet)**		
Vehicle Type	REMEL	Traffic Adj.	Dist Adj.	Finite Adj	Leq Peak	Leq Day	Leq Eve.	Leq Night	Ldn	CNEL		Ldn	CNEL
Automobiles	65.11	0.89	0.75	-1.20	65.55	63.18	61.88	55.83	64.26	64.89	70 dBA:	**25**	**27**
Medium Trucks	74.83	-13.98	0.75	-1.20	60.40	41.19	33.41	42.62	48.77	48.81	65 dBA:	**53**	**57**
Heavy Trucks	80.05	-11.76	0.75	-1.20	67.84	50.85	43.07	52.27	58.43	58.46	60 dBA:	**114**	**123**
				Total:	**70.32**	**63.45**	**61.95**	**57.56**	**65.36**	**65.87**	55 dBA:	**245**	**265**

FHWA-RD-77-108 HIGHWAY TRAFFIC NOISE PREDICTION MODEL

Scenario: EXISTING CONDITIONS

Project: Pacoima Spreading Grounds
Site Conditions: Soft

Road Name: Branford Street **Segment: South of San Fernando Road**

Average Daily Traffic: 11220 Vehicles | Vehicle Speed: 35 MPH | Vehicle Mix: 1 | Roadway Classification: Secondary

	NOISE PARAMETERS AT 60 FEET FROM CENTERLINE (Equiv. Lane Dist: 54.99 ft)										**Centerline Distance to**		
	Noise Adjustments				**Unmitigated Noise Levels**						**Noise Contour (in feet)**		
Vehicle Type	REMEL	Traffic Adj.	Dist Adj.	Finite Adj	Leq Peak	Leq Day	Leq Eve.	Leq Night	Ldn	CNEL		Ldn	CNEL
Automobiles	65.11	-0.61	-0.72	-1.20	62.58	60.21	58.91	52.86	61.29	61.92	70 dBA:	**19**	**20**
Medium Trucks	74.83	-15.47	-0.72	-1.20	57.43	38.22	30.44	39.65	45.80	45.84	65 dBA:	**40**	**43**
Heavy Trucks	80.05	-13.26	-0.72	-1.20	64.87	47.88	40.10	49.30	55.46	55.49	60 dBA:	**87**	**94**
				Total:	**67.35**	**60.48**	**58.98**	**54.59**	**62.39**	**62.90**	55 dBA:	**187**	**202**

Road Name: Sheldon Street **Segment: North of I-5 Northbound On-Ramp**

Average Daily Traffic: 22020 Vehicles | Vehicle Speed: 35 MPH | Vehicle Mix: 1 | Roadway Classification: Secondary

	NOISE PARAMETERS AT 60 FEET FROM CENTERLINE (Equiv. Lane Dist: 54.99 ft)										**Centerline Distance to**		
	Noise Adjustments				**Unmitigated Noise Levels**						**Noise Contour (in feet)**		
Vehicle Type	REMEL	Traffic Adj.	Dist Adj.	Finite Adj	Leq Peak	Leq Day	Leq Eve.	Leq Night	Ldn	CNEL		Ldn	CNEL
Automobiles	65.11	2.32	-0.72	-1.20	65.51	63.13	61.84	55.79	64.22	64.85	70 dBA:	**29**	**32**
Medium Trucks	74.83	-12.55	-0.72	-1.20	60.36	41.15	33.37	42.58	48.73	48.76	65 dBA:	**63**	**68**
Heavy Trucks	80.05	-10.33	-0.72	-1.20	67.79	50.81	43.02	52.23	58.39	58.42	60 dBA:	**136**	**147**
				Total:	**70.28**	**63.41**	**61.90**	**57.52**	**65.32**	**65.83**	55 dBA:	**293**	**316**

Road Name: Sheldon Street **Segment: North of Haddon Avenue**

Average Daily Traffic: 19970 Vehicles | Vehicle Speed: 35 MPH | Vehicle Mix: 1 | Roadway Classification: Secondary

	NOISE PARAMETERS AT 45 FEET FROM CENTERLINE (Equiv. Lane Dist: 38.07 ft)										**Centerline Distance to**		
	Noise Adjustments				**Unmitigated Noise Levels**						**Noise Contour (in feet)**		
Vehicle Type	REMEL	Traffic Adj.	Dist Adj.	Finite Adj	Leq Peak	Leq Day	Leq Eve.	Leq Night	Ldn	CNEL		Ldn	CNEL
Automobiles	65.11	1.90	1.67	-1.20	67.48	65.11	63.81	57.76	66.19	66.82	70 dBA:	**30**	**32**
Medium Trucks	74.83	-12.97	1.67	-1.20	62.33	43.12	35.34	44.55	50.70	50.74	65 dBA:	**64**	**69**
Heavy Trucks	80.05	-10.75	1.67	-1.20	69.77	52.78	45.00	54.20	60.36	60.39	60 dBA:	**138**	**149**
				Total:	**72.25**	**65.38**	**63.88**	**59.49**	**67.29**	**67.80**	55 dBA:	**297**	**321**

Road Name: Sheldon Street **Segment: North of Telfair Avenue**

Average Daily Traffic: 17260 Vehicles | Vehicle Speed: 35 MPH | Vehicle Mix: 1 | Roadway Classification: Secondary

	NOISE PARAMETERS AT 55 FEET FROM CENTERLINE (Equiv. Lane Dist: 49.49 ft)										**Centerline Distance to**		
	Noise Adjustments				**Unmitigated Noise Levels**						**Noise Contour (in feet)**		
Vehicle Type	REMEL	Traffic Adj.	Dist Adj.	Finite Adj	Leq Peak	Leq Day	Leq Eve.	Leq Night	Ldn	CNEL		Ldn	CNEL
Automobiles	65.11	1.26	-0.04	-1.20	65.14	62.76	61.47	55.42	63.85	64.48	70 dBA:	**25**	**27**
Medium Trucks	74.83	-13.60	-0.04	-1.20	59.99	40.78	33.00	42.21	48.36	48.39	65 dBA:	**55**	**59**
Heavy Trucks	80.05	-11.39	-0.04	-1.20	67.42	50.43	42.65	51.86	58.02	58.05	60 dBA:	**118**	**127**
				Total:	**69.91**	**63.04**	**61.53**	**57.14**	**64.95**	**65.46**	55 dBA:	**253**	**274**

FHWA-RD-77-108 HIGHWAY TRAFFIC NOISE PREDICTION MODEL

Scenario: EXISTING CONDITIONS

Project: Pacoima Spreading Grounds
Site Conditions: Soft

Road Name: Sheldon Street **Segment: South of San Fernando Road**

Average Daily Traffic: 19860 Vehicles Vehicle Speed: 35 MPH Vehicle Mix: 1 Roadway Classification: Secondary

	NOISE PARAMETERS AT 45 FEET FROM CENTERLINE (Equiv. Lane Dist: 38.07 ft)										**Centerline Distance to**		
	Noise Adjustments				**Unmitigated Noise Levels**						**Noise Contour (in feet)**		
Vehicle Type	REMEL	Traffic Adj.	Dist Adj.	Finite Adj	Leq Peak	Leq Day	Leq Eve.	Leq Night	Ldn	CNEL		Ldn	CNEL
Automobiles	65.11	1.87	1.67	-1.20	67.45	65.08	63.79	57.73	66.17	66.80	70 dBA:	**30**	**32**
Medium Trucks	74.83	-13.00	1.67	-1.20	62.31	43.10	35.32	44.52	50.68	50.71	65 dBA:	**64**	**69**
Heavy Trucks	80.05	-10.78	1.67	-1.20	69.74	52.75	44.97	54.18	60.33	60.37	60 dBA:	**137**	**148**
				Total:	**72.22**	**65.36**	**63.85**	**59.46**	**67.27**	**67.77**	55 dBA:	**296**	**320**

Road Name: San Fernando Road **Segment: West of Sheldon Street**

Average Daily Traffic: 16640 Vehicles Vehicle Speed: 35 MPH Vehicle Mix: 1 Roadway Classification: Major

	NOISE PARAMETERS AT 40 FEET FROM CENTERLINE (Equiv. Lane Dist: 26.46 ft)										**Centerline Distance to**		
	Noise Adjustments				**Unmitigated Noise Levels**						**Noise Contour (in feet)**		
Vehicle Type	REMEL	Traffic Adj.	Dist Adj.	Finite Adj	Leq Peak	Leq Day	Leq Eve.	Leq Night	Ldn	CNEL		Ldn	CNEL
Automobiles	65.11	1.10	4.04	-1.20	69.06	66.68	65.39	59.34	67.77	68.40	70 dBA:	**34**	**36**
Medium Trucks	74.83	-13.76	4.04	-1.20	63.91	44.70	36.92	46.13	52.28	52.31	65 dBA:	**72**	**78**
Heavy Trucks	80.05	-11.54	4.04	-1.20	71.34	54.35	46.57	55.78	61.94	61.97	60 dBA:	**156**	**169**
				Total:	**73.83**	**66.96**	**65.45**	**61.06**	**68.87**	**69.38**	55 dBA:	**336**	**363**

Road Name: San Fernando Road **Segment: West of Branford Street**

Average Daily Traffic: 16580 Vehicles Vehicle Speed: 35 MPH Vehicle Mix: 1 Roadway Classification: Major

	NOISE PARAMETERS AT 85 FEET FROM CENTERLINE (Equiv. Lane Dist: 79.53 ft)										**Centerline Distance to**		
	Noise Adjustments				**Unmitigated Noise Levels**						**Noise Contour (in feet)**		
Vehicle Type	REMEL	Traffic Adj.	Dist Adj.	Finite Adj	Leq Peak	Leq Day	Leq Eve.	Leq Night	Ldn	CNEL		Ldn	CNEL
Automobiles	65.11	1.09	-3.13	-1.20	61.87	59.50	58.21	52.15	60.58	61.21	70 dBA:	**24**	**26**
Medium Trucks	74.83	-13.78	-3.13	-1.20	56.72	37.51	29.73	38.94	45.10	45.13	65 dBA:	**51**	**55**
Heavy Trucks	80.05	-11.56	-3.13	-1.20	64.16	47.17	39.39	48.60	54.75	54.78	60 dBA:	**110**	**119**
				Total:	**66.64**	**59.77**	**58.27**	**53.88**	**61.69**	**62.19**	55 dBA:	**237**	**256**

FHWA-RD-77-108 HIGHWAY TRAFFIC NOISE PREDICTION MODEL

Scenario: EXISTING WITH ALTERNATIVE ROUTE 1 CONDITIONS

Project: Pacoima Spreading Grounds
Site Conditions: Soft

	Vehicle Mix 1 (Arterials)				Vehicle Mix 2 (Arterial With Project)				Vehicle Mix 3 (I-5)			
Vehicle Type	Day	Evening	Night	Daily	Day	Evening	Night	Daily	Day	Evenin	Night	Daily
Automobiles	69.50%	12.90%	9.60%	92.00%	67.50%	12.51%	9.31%	89.32%	63.84%	13.08%	15.31%	92.23%
Medium Trucks	1.44%	0.06%	1.50%	3.00%	1.40%	0.06%	1.45%	2.91%	1.22%	0.22%	0.62%	2.07%
Heavy Trucks	2.40%	0.10%	2.50%	5.00%	5.32%	0.10%	2.42%	7.85%	3.12%	0.30%	2.28%	5.70%

Road Name: Arleta Avenue **Segment: North of Devonshire Street**

Average Daily Traffic: 14430 Vehicles Vehicle Speed: 40 MPH Vehicle Mix: 2 Roadway Classification: Secondary

	NOISE PARAMETERS AT 150 FEET FROM CENTERLINE (Equiv. Lane Dist: 148.07 ft)										**Centerline Distance to**		
	Noise Adjustments				**Unmitigated Noise Levels**						**Noise Contour (in feet)**		
Vehicle Type	REMEL	Traffic Adj.	Dist Adj.	Finite Adj	Leq Peak	Leq Day	Leq Eve.	Leq Night	Ldn	CNEL		Ldn	CNEL
Automobiles	67.36	-0.22	-7.18	-1.20	58.76	56.26	54.96	48.91	57.34	57.97	70 dBA:	**27**	**29**
Medium Trucks	76.31	-15.10	-7.18	-1.20	52.84	33.50	25.72	34.92	41.08	41.11	65 dBA:	**58**	**62**
Heavy Trucks	81.16	-10.79	-7.18	-1.20	62.00	48.47	37.09	46.30	52.92	52.95	60 dBA:	**124**	**133**
				Total:	**64.03**	**56.95**	**55.04**	**50.92**	**58.75**	**59.23**	55 dBA:	**267**	**287**

Road Name: Arleta Avenue **Segment: East of Devonshire Street**

Average Daily Traffic: 18960 Vehicles Vehicle Speed: 40 MPH Vehicle Mix: 2 Roadway Classification: Secondary

	NOISE PARAMETERS AT 60 FEET FROM CENTERLINE (Equiv. Lane Dist: 54.99 ft)										**Centerline Distance to**		
	Noise Adjustments				**Unmitigated Noise Levels**						**Noise Contour (in feet)**		
Vehicle Type	REMEL	Traffic Adj.	Dist Adj.	Finite Adj	Leq Peak	Leq Day	Leq Eve.	Leq Night	Ldn	CNEL		Ldn	CNEL
Automobiles	67.36	0.96	-0.72	-1.20	66.40	63.90	62.60	56.54	64.98	65.61	70 dBA:	**34**	**37**
Medium Trucks	76.31	-13.91	-0.72	-1.20	60.48	41.14	33.35	42.56	48.72	48.75	65 dBA:	**74**	**80**
Heavy Trucks	81.16	-9.60	-0.72	-1.20	69.63	56.11	44.73	53.94	60.55	60.59	60 dBA:	**160**	**172**
				Total:	**71.67**	**64.59**	**62.67**	**58.55**	**66.39**	**66.86**	55 dBA:	**345**	**371**

Road Name: Paxton Street **Segment: North of Arleta Avenue**

Average Daily Traffic: 14430 Vehicles Vehicle Speed: 40 MPH Vehicle Mix: 2 Roadway Classification: Secondary

	NOISE PARAMETERS AT 55 FEET FROM CENTERLINE (Equiv. Lane Dist: 49.49 ft)										**Centerline Distance to**		
	Noise Adjustments				**Unmitigated Noise Levels**						**Noise Contour (in feet)**		
Vehicle Type	REMEL	Traffic Adj.	Dist Adj.	Finite Adj	Leq Peak	Leq Day	Leq Eve.	Leq Night	Ldn	CNEL		Ldn	CNEL
Automobiles	67.36	-0.22	-0.04	-1.20	65.90	63.40	62.10	56.05	64.48	65.11	70 dBA:	**29**	**31**
Medium Trucks	76.31	-15.10	-0.04	-1.20	59.98	40.64	32.86	42.06	48.22	48.25	65 dBA:	**63**	**68**
Heavy Trucks	81.16	-10.79	-0.04	-1.20	69.14	55.61	44.23	53.44	60.06	60.09	60 dBA:	**136**	**146**
				Total:	**71.17**	**64.09**	**62.18**	**58.06**	**65.89**	**66.37**	55 dBA:	**293**	**315**

FHWA-RD-77-108 HIGHWAY TRAFFIC NOISE PREDICTION MODEL

Scenario: EXISTING WITH ALTERNATIVE ROUTE 1 CONDITIONS

Project: Pacoima Spreading Grounds
Site Conditions: Soft

Road Name: Paxton Street **Segment: North of I-5 Northbound Ramps**

Average Daily Traffic: 15110 Vehicles Vehicle Speed: 40 MPH Vehicle Mix: 2 Roadway Classification: Secondary

	NOISE PARAMETERS AT 50 FEET FROM CENTERLINE (Equiv. Lane Dist: 43.86 ft)										**Centerline Distance to**		
	Noise Adjustments				**Unmitigated Noise Levels**						**Noise Contour (in feet)**		
Vehicle Type	REMEL	Traffic Adj.	Dist Adj.	Finite Adj	Leq Peak	Leq Day	Leq Eve.	Leq Night	Ldn	CNEL		Ldn	CNEL
Automobiles	67.36	-0.02	0.75	-1.20	66.89	64.39	63.09	57.03	65.47	66.10	70 dBA:	**31**	**33**
Medium Trucks	76.31	-14.90	0.75	-1.20	60.97	41.62	33.84	43.05	49.20	49.24	65 dBA:	**67**	**72**
Heavy Trucks	81.16	-10.59	0.75	-1.20	70.12	56.59	45.22	54.42	61.04	61.07	60 dBA:	**144**	**155**
				Total:	**72.15**	**65.07**	**63.16**	**59.04**	**66.88**	**67.35**	55 dBA:	**310**	**333**

Road Name: Laurel Canyon Boulevard **Segment: West of I-5 Southbound Ramps**

Average Daily Traffic: 21820 Vehicles Vehicle Speed: 35 MPH Vehicle Mix: 2 Roadway Classification: Major

	NOISE PARAMETERS AT 55 FEET FROM CENTERLINE (Equiv. Lane Dist: 46.1 ft)										**Centerline Distance to**		
	Noise Adjustments				**Unmitigated Noise Levels**						**Noise Contour (in feet)**		
Vehicle Type	REMEL	Traffic Adj.	Dist Adj.	Finite Adj	Leq Peak	Leq Day	Leq Eve.	Leq Night	Ldn	CNEL		Ldn	CNEL
Automobiles	65.11	2.15	0.43	-1.20	66.49	63.99	62.69	56.63	65.07	65.70	70 dBA:	**34**	**36**
Medium Trucks	74.83	-12.72	0.43	-1.20	61.33	41.99	34.21	43.42	49.57	49.61	65 dBA:	**73**	**78**
Heavy Trucks	80.05	-8.41	0.43	-1.20	70.86	57.33	45.96	55.16	61.78	61.81	60 dBA:	**157**	**168**
				Total:	**72.55**	**64.86**	**62.79**	**59.09**	**66.82**	**67.26**	55 dBA:	**338**	**361**

Road Name: Laurel Canyon Boulevard **Segment: West of I-5 Northbound Off-Ramp**

Average Daily Traffic: 19640 Vehicles Vehicle Speed: 35 MPH Vehicle Mix: 2 Roadway Classification: Major

	NOISE PARAMETERS AT 55 FEET FROM CENTERLINE (Equiv. Lane Dist: 46.1 ft)										**Centerline Distance to**		
	Noise Adjustments				**Unmitigated Noise Levels**						**Noise Contour (in feet)**		
Vehicle Type	REMEL	Traffic Adj.	Dist Adj.	Finite Adj	Leq Peak	Leq Day	Leq Eve.	Leq Night	Ldn	CNEL		Ldn	CNEL
Automobiles	65.11	1.69	0.43	-1.20	66.03	63.53	62.23	56.18	64.61	65.24	70 dBA:	**31**	**34**
Medium Trucks	74.83	-13.18	0.43	-1.20	60.88	41.53	33.75	42.96	49.11	49.15	65 dBA:	**68**	**73**
Heavy Trucks	80.05	-8.87	0.43	-1.20	70.40	56.87	45.50	54.71	61.32	61.35	60 dBA:	**146**	**156**
				Total:	**72.10**	**64.40**	**62.33**	**58.63**	**66.36**	**66.80**	55 dBA:	**315**	**337**

Road Name: Branford Street **Segment: North of Laurel Canyon Boulevard**

Average Daily Traffic: 15920 Vehicles Vehicle Speed: 35 MPH Vehicle Mix: 2 Roadway Classification: Secondary

	NOISE PARAMETERS AT 50 FEET FROM CENTERLINE (Equiv. Lane Dist: 43.86 ft)										**Centerline Distance to**		
	Noise Adjustments				**Unmitigated Noise Levels**						**Noise Contour (in feet)**		
Vehicle Type	REMEL	Traffic Adj.	Dist Adj.	Finite Adj	Leq Peak	Leq Day	Leq Eve.	Leq Night	Ldn	CNEL		Ldn	CNEL
Automobiles	65.11	0.78	0.75	-1.20	65.44	62.94	61.64	55.59	64.02	64.65	70 dBA:	**26**	**28**
Medium Trucks	74.83	-14.09	0.75	-1.20	60.29	40.95	33.16	42.37	48.53	48.56	65 dBA:	**56**	**60**
Heavy Trucks	80.05	-9.78	0.75	-1.20	69.82	56.29	44.91	54.12	60.73	60.77	60 dBA:	**121**	**130**
				Total:	**71.51**	**63.82**	**61.74**	**58.04**	**65.78**	**66.22**	55 dBA:	**261**	**280**

FHWA-RD-77-108 HIGHWAY TRAFFIC NOISE PREDICTION MODEL

Scenario: EXISTING WITH ALTERNATIVE ROUTE 1 CONDITIONS

Project: Pacoima Spreading Grounds
Site Conditions: Soft

Road Name: Branford Street **Segment: South of San Fernando Road**

Average Daily Traffic: 11300 Vehicles Vehicle Speed: 35 MPH Vehicle Mix: 2 Roadway Classification: Secondary

	NOISE PARAMETERS AT 60 FEET FROM CENTERLINE (Equiv. Lane Dist: 54.99 ft)										**Centerline Distance to**		
	Noise Adjustments				**Unmitigated Noise Levels**						**Noise Contour (in feet)**		
Vehicle Type	REMEL	Traffic Adj.	Dist Adj.	Finite Adj	Leq Peak	Leq Day	Leq Eve.	Leq Night	Ldn	CNEL		Ldn	CNEL
Automobiles	65.11	-0.71	-0.72	-1.20	62.48	59.98	58.68	52.63	61.06	61.69	70 dBA:	**20**	**21**
Medium Trucks	74.83	-15.58	-0.72	-1.20	57.33	37.98	30.20	39.41	45.56	45.60	65 dBA:	**43**	**46**
Heavy Trucks	80.05	-11.27	-0.72	-1.20	66.85	53.32	41.95	51.16	57.77	57.80	60 dBA:	**92**	**99**
				Total:	**68.55**	**60.85**	**58.78**	**55.08**	**62.81**	**63.25**	55 dBA:	**199**	**213**

Road Name: Sheldon Street **Segment: North of I-5 Northbound On-Ramp**

Average Daily Traffic: 22230 Vehicles Vehicle Speed: 35 MPH Vehicle Mix: 2 Roadway Classification: Secondary

	NOISE PARAMETERS AT 60 FEET FROM CENTERLINE (Equiv. Lane Dist: 54.99 ft)										**Centerline Distance to**		
	Noise Adjustments				**Unmitigated Noise Levels**						**Noise Contour (in feet)**		
Vehicle Type	REMEL	Traffic Adj.	Dist Adj.	Finite Adj	Leq Peak	Leq Day	Leq Eve.	Leq Night	Ldn	CNEL		Ldn	CNEL
Automobiles	65.11	2.23	-0.72	-1.20	65.42	62.92	61.62	55.57	64.00	64.63	70 dBA:	**31**	**33**
Medium Trucks	74.83	-12.64	-0.72	-1.20	60.27	40.92	33.14	42.35	48.50	48.54	65 dBA:	**67**	**72**
Heavy Trucks	80.05	-8.33	-0.72	-1.20	69.79	56.26	44.89	54.10	60.71	60.74	60 dBA:	**145**	**155**
				Total:	**71.49**	**63.79**	**61.72**	**58.02**	**65.75**	**66.19**	55 dBA:	**313**	**334**

Road Name: Sheldon Street **Segment: North of Haddon Avenue**

Average Daily Traffic: 20180 Vehicles Vehicle Speed: 35 MPH Vehicle Mix: 2 Roadway Classification: Secondary

	NOISE PARAMETERS AT 45 FEET FROM CENTERLINE (Equiv. Lane Dist: 38.07 ft)										**Centerline Distance to**		
	Noise Adjustments				**Unmitigated Noise Levels**						**Noise Contour (in feet)**		
Vehicle Type	REMEL	Traffic Adj.	Dist Adj.	Finite Adj	Leq Peak	Leq Day	Leq Eve.	Leq Night	Ldn	CNEL		Ldn	CNEL
Automobiles	65.11	1.81	1.67	-1.20	67.40	64.90	63.60	57.54	65.98	66.61	70 dBA:	**32**	**34**
Medium Trucks	74.83	-13.06	1.67	-1.20	62.24	42.90	35.12	44.33	50.48	50.51	65 dBA:	**68**	**73**
Heavy Trucks	80.05	-8.75	1.67	-1.20	71.77	58.24	46.86	56.07	62.69	62.72	60 dBA:	**147**	**158**
				Total:	**73.46**	**65.77**	**63.69**	**60.00**	**67.73**	**68.17**	55 dBA:	**318**	**340**

Road Name: Sheldon Street **Segment: North of Telfair Avenue**

Average Daily Traffic: 17470 Vehicles Vehicle Speed: 35 MPH Vehicle Mix: 2 Roadway Classification: Secondary

	NOISE PARAMETERS AT 55 FEET FROM CENTERLINE (Equiv. Lane Dist: 49.49 ft)										**Centerline Distance to**		
	Noise Adjustments				**Unmitigated Noise Levels**						**Noise Contour (in feet)**		
Vehicle Type	REMEL	Traffic Adj.	Dist Adj.	Finite Adj	Leq Peak	Leq Day	Leq Eve.	Leq Night	Ldn	CNEL		Ldn	CNEL
Automobiles	65.11	1.19	-0.04	-1.20	65.06	62.56	61.26	55.21	63.64	64.27	70 dBA:	**27**	**29**
Medium Trucks	74.83	-13.69	-0.04	-1.20	59.91	40.56	32.78	41.99	48.14	48.18	65 dBA:	**58**	**63**
Heavy Trucks	80.05	-9.38	-0.04	-1.20	69.43	55.90	44.53	53.74	60.35	60.38	60 dBA:	**126**	**135**
				Total:	**71.13**	**63.43**	**61.36**	**57.66**	**65.39**	**65.83**	55 dBA:	**271**	**290**

FHWA-RD-77-108 HIGHWAY TRAFFIC NOISE PREDICTION MODEL

Scenario: EXISTING WITH ALTERNATIVE ROUTE 1 CONDITIONS

Project: Pacoima Spreading Grounds
Site Conditions: Soft

Road Name: Sheldon Street **Segment: South of San Fernando Road**

Average Daily Traffic: 20070 Vehicles Vehicle Speed: 35 MPH Vehicle Mix: 2 Roadway Classification: Secondary

	NOISE PARAMETERS AT 45 FEET FROM CENTERLINE (Equiv. Lane Dist: 38.07 ft)										**Centerline Distance to**		
	Noise Adjustments				**Unmitigated Noise Levels**						**Noise Contour (in feet)**		
Vehicle Type	REMEL	Traffic Adj.	Dist Adj.	Finite Adj	Leq Peak	Leq Day	Leq Eve.	Leq Night	Ldn	CNEL		Ldn	CNEL
Automobiles	65.11	1.79	1.67	-1.20	67.37	64.87	63.57	57.52	65.95	66.58	70 dBA:	**32**	**34**
Medium Trucks	74.83	-13.08	1.67	-1.20	62.22	42.87	35.09	44.30	50.46	50.49	65 dBA:	**68**	**73**
Heavy Trucks	80.05	-8.77	1.67	-1.20	71.74	58.22	46.84	56.05	62.66	62.70	60 dBA:	**147**	**157**
				Total:	**73.44**	**65.74**	**63.67**	**59.97**	**67.71**	**68.15**	55 dBA:	**316**	**339**

Road Name: San Fernando Road **Segment: West of Sheldon Street**

Average Daily Traffic: 16850 Vehicles Vehicle Speed: 35 MPH Vehicle Mix: 2 Roadway Classification: Major

	NOISE PARAMETERS AT 40 FEET FROM CENTERLINE (Equiv. Lane Dist: 26.46 ft)										**Centerline Distance to**		
	Noise Adjustments				**Unmitigated Noise Levels**						**Noise Contour (in feet)**		
Vehicle Type	REMEL	Traffic Adj.	Dist Adj.	Finite Adj	Leq Peak	Leq Day	Leq Eve.	Leq Night	Ldn	CNEL		Ldn	CNEL
Automobiles	65.11	1.03	4.04	-1.20	68.98	66.48	65.18	59.13	67.56	68.19	70 dBA:	**36**	**39**
Medium Trucks	74.83	-13.84	4.04	-1.20	63.83	44.49	36.70	45.91	52.07	52.10	65 dBA:	**78**	**83**
Heavy Trucks	80.05	-9.53	4.04	-1.20	73.36	59.83	48.45	57.66	64.27	64.31	60 dBA:	**167**	**179**
				Total:	**75.05**	**67.36**	**65.28**	**61.58**	**69.32**	**69.76**	55 dBA:	**360**	**385**

Road Name: San Fernando Road **Segment: West of Branford Street**

Average Daily Traffic: 16770 Vehicles Vehicle Speed: 35 MPH Vehicle Mix: 2 Roadway Classification: Major

	NOISE PARAMETERS AT 85 FEET FROM CENTERLINE (Equiv. Lane Dist: 79.53 ft)										**Centerline Distance to**		
	Noise Adjustments				**Unmitigated Noise Levels**						**Noise Contour (in feet)**		
Vehicle Type	REMEL	Traffic Adj.	Dist Adj.	Finite Adj	Leq Peak	Leq Day	Leq Eve.	Leq Night	Ldn	CNEL		Ldn	CNEL
Automobiles	65.11	1.01	-3.13	-1.20	61.79	59.29	57.99	51.94	60.37	61.00	70 dBA:	**25**	**27**
Medium Trucks	74.83	-13.86	-3.13	-1.20	56.64	37.29	29.51	38.72	44.88	44.91	65 dBA:	**55**	**58**
Heavy Trucks	80.05	-9.55	-3.13	-1.20	66.16	52.64	41.26	50.47	57.08	57.11	60 dBA:	**118**	**126**
				Total:	**67.86**	**60.16**	**58.09**	**54.39**	**62.13**	**62.57**	55 dBA:	**254**	**272**

FHWA-RD-77-108 HIGHWAY TRAFFIC NOISE PREDICTION MODEL

Scenario: EXISTING WITH ALTERNATIVE ROUTE 2 CONDITIONS

Project: Pacoima Spreading Grounds
Site Conditions: Soft

	Vehicle Mix 1 (Arterials)				Vehicle Mix 2 (Arterial With Project)				Vehicle Mix 3 (I-5)			
Vehicle Type	Day	Evening	Night	Daily	Day	Evening	Night	Daily	Day	Evenin	Night	Daily
Automobiles	69.50%	12.90%	9.60%	92.00%	67.50%	12.51%	9.31%	89.32%	63.84%	13.08%	15.31%	92.23%
Medium Trucks	1.44%	0.06%	1.50%	3.00%	1.40%	0.06%	1.45%	2.91%	1.22%	0.22%	0.62%	2.07%
Heavy Trucks	2.40%	0.10%	2.50%	5.00%	5.32%	0.10%	2.42%	7.85%	3.12%	0.30%	2.28%	5.70%

Road Name: Arleta Avenue **Segment: North of Devonshire Street**

Average Daily Traffic: 14430 Vehicles Vehicle Speed: 40 MPH Vehicle Mix: 2 Roadway Classification: Secondary

	NOISE PARAMETERS AT 150 FEET FROM CENTERLINE (Equiv. Lane Dist: 148.07 ft)										**Centerline Distance to**		
	Noise Adjustments				**Unmitigated Noise Levels**						**Noise Contour (in feet)**		
Vehicle Type	REMEL	Traffic Adj.	Dist Adj.	Finite Adj	Leq Peak	Leq Day	Leq Eve.	Leq Night	Ldn	CNEL		Ldn	CNEL
Automobiles	67.36	-0.22	-7.18	-1.20	58.76	56.26	54.96	48.91	57.34	57.97	70 dBA:	**27**	**29**
Medium Trucks	76.31	-15.10	-7.18	-1.20	52.84	33.50	25.72	34.92	41.08	41.11	65 dBA:	**58**	**62**
Heavy Trucks	81.16	-10.79	-7.18	-1.20	62.00	48.47	37.09	46.30	52.92	52.95	60 dBA:	**124**	**133**
				Total:	**64.03**	**56.95**	**55.04**	**50.92**	**58.75**	**59.23**	55 dBA:	**267**	**287**

Road Name: Arleta Avenue **Segment: East of Devonshire Street**

Average Daily Traffic: 18960 Vehicles Vehicle Speed: 40 MPH Vehicle Mix: 2 Roadway Classification: Secondary

	NOISE PARAMETERS AT 60 FEET FROM CENTERLINE (Equiv. Lane Dist: 54.99 ft)										**Centerline Distance to**		
	Noise Adjustments				**Unmitigated Noise Levels**						**Noise Contour (in feet)**		
Vehicle Type	REMEL	Traffic Adj.	Dist Adj.	Finite Adj	Leq Peak	Leq Day	Leq Eve.	Leq Night	Ldn	CNEL		Ldn	CNEL
Automobiles	67.36	0.96	-0.72	-1.20	66.40	63.90	62.60	56.54	64.98	65.61	70 dBA:	**34**	**37**
Medium Trucks	76.31	-13.91	-0.72	-1.20	60.48	41.14	33.35	42.56	48.72	48.75	65 dBA:	**74**	**80**
Heavy Trucks	81.16	-9.60	-0.72	-1.20	69.63	56.11	44.73	53.94	60.55	60.59	60 dBA:	**160**	**172**
				Total:	**71.67**	**64.59**	**62.67**	**58.55**	**66.39**	**66.86**	55 dBA:	**345**	**371**

Road Name: Paxton Street **Segment: North of Arleta Avenue**

Average Daily Traffic: 14430 Vehicles Vehicle Speed: 40 MPH Vehicle Mix: 2 Roadway Classification: Secondary

	NOISE PARAMETERS AT 55 FEET FROM CENTERLINE (Equiv. Lane Dist: 49.49 ft)										**Centerline Distance to**		
	Noise Adjustments				**Unmitigated Noise Levels**						**Noise Contour (in feet)**		
Vehicle Type	REMEL	Traffic Adj.	Dist Adj.	Finite Adj	Leq Peak	Leq Day	Leq Eve.	Leq Night	Ldn	CNEL		Ldn	CNEL
Automobiles	67.36	-0.22	-0.04	-1.20	65.90	63.40	62.10	56.05	64.48	65.11	70 dBA:	**29**	**31**
Medium Trucks	76.31	-15.10	-0.04	-1.20	59.98	40.64	32.86	42.06	48.22	48.25	65 dBA:	**63**	**68**
Heavy Trucks	81.16	-10.79	-0.04	-1.20	69.14	55.61	44.23	53.44	60.06	60.09	60 dBA:	**136**	**146**
				Total:	**71.17**	**64.09**	**62.18**	**58.06**	**65.89**	**66.37**	55 dBA:	**293**	**315**

FHWA-RD-77-108 HIGHWAY TRAFFIC NOISE PREDICTION MODEL

Scenario: EXISTING WITH ALTERNATIVE ROUTE 2 CONDITIONS

Project: Pacoima Spreading Grounds
Site Conditions: Soft

Road Name: Paxton Street **Segment: North of I-5 Northbound Ramps**

Average Daily Traffic: 15110 Vehicles Vehicle Speed: 40 MPH Vehicle Mix: 2 Roadway Classification: Secondary

	NOISE PARAMETERS AT 50 FEET FROM CENTERLINE (Equiv. Lane Dist: 43.86 ft)										**Centerline Distance to**		
	Noise Adjustments				**Unmitigated Noise Levels**						**Noise Contour (in feet)**		
Vehicle Type	REMEL	Traffic Adj.	Dist Adj.	Finite Adj	Leq Peak	Leq Day	Leq Eve.	Leq Night	Ldn	CNEL		Ldn	CNEL
Automobiles	67.36	-0.02	0.75	-1.20	66.89	64.39	63.09	57.03	65.47	66.10	70 dBA:	**31**	**33**
Medium Trucks	76.31	-14.90	0.75	-1.20	60.97	41.62	33.84	43.05	49.20	49.24	65 dBA:	**67**	**72**
Heavy Trucks	81.16	-10.59	0.75	-1.20	70.12	56.59	45.22	54.42	61.04	61.07	60 dBA:	**144**	**155**
				Total:	**72.15**	**65.07**	**63.16**	**59.04**	**66.88**	**67.35**	55 dBA:	**310**	**333**

Road Name: Laurel Canyon Boulevard **Segment: West of I-5 Southbound Ramps**

Average Daily Traffic: 21820 Vehicles Vehicle Speed: 35 MPH Vehicle Mix: 2 Roadway Classification: Major

	NOISE PARAMETERS AT 55 FEET FROM CENTERLINE (Equiv. Lane Dist: 46.1 ft)										**Centerline Distance to**		
	Noise Adjustments				**Unmitigated Noise Levels**						**Noise Contour (in feet)**		
Vehicle Type	REMEL	Traffic Adj.	Dist Adj.	Finite Adj	Leq Peak	Leq Day	Leq Eve.	Leq Night	Ldn	CNEL		Ldn	CNEL
Automobiles	65.11	2.15	0.43	-1.20	66.49	63.99	62.69	56.63	65.07	65.70	70 dBA:	**34**	**36**
Medium Trucks	74.83	-12.72	0.43	-1.20	61.33	41.99	34.21	43.42	49.57	49.61	65 dBA:	**73**	**78**
Heavy Trucks	80.05	-8.41	0.43	-1.20	70.86	57.33	45.96	55.16	61.78	61.81	60 dBA:	**157**	**168**
				Total:	**72.55**	**64.86**	**62.79**	**59.09**	**66.82**	**67.26**	55 dBA:	**338**	**361**

Road Name: Laurel Canyon Boulevard **Segment: West of I-5 Northbound Off-Ramp**

Average Daily Traffic: 19800 Vehicles Vehicle Speed: 35 MPH Vehicle Mix: 2 Roadway Classification: Major

	NOISE PARAMETERS AT 55 FEET FROM CENTERLINE (Equiv. Lane Dist: 46.1 ft)										**Centerline Distance to**		
	Noise Adjustments				**Unmitigated Noise Levels**						**Noise Contour (in feet)**		
Vehicle Type	REMEL	Traffic Adj.	Dist Adj.	Finite Adj	Leq Peak	Leq Day	Leq Eve.	Leq Night	Ldn	CNEL		Ldn	CNEL
Automobiles	65.11	1.73	0.43	-1.20	66.07	63.57	62.27	56.21	64.65	65.28	70 dBA:	**32**	**34**
Medium Trucks	74.83	-13.14	0.43	-1.20	60.91	41.57	33.79	43.00	49.15	49.18	65 dBA:	**68**	**73**
Heavy Trucks	80.05	-8.83	0.43	-1.20	70.44	56.91	45.53	54.74	61.36	61.39	60 dBA:	**147**	**157**
				Total:	**72.13**	**64.44**	**62.36**	**58.67**	**66.40**	**66.84**	55 dBA:	**316**	**339**

Road Name: Branford Street **Segment: North of Laurel Canyon Boulevard**

Average Daily Traffic: 16080 Vehicles Vehicle Speed: 35 MPH Vehicle Mix: 2 Roadway Classification: Secondary

	NOISE PARAMETERS AT 50 FEET FROM CENTERLINE (Equiv. Lane Dist: 43.86 ft)										**Centerline Distance to**		
	Noise Adjustments				**Unmitigated Noise Levels**						**Noise Contour (in feet)**		
Vehicle Type	REMEL	Traffic Adj.	Dist Adj.	Finite Adj	Leq Peak	Leq Day	Leq Eve.	Leq Night	Ldn	CNEL		Ldn	CNEL
Automobiles	65.11	0.83	0.75	-1.20	65.49	62.99	61.69	55.63	64.07	64.70	70 dBA:	**26**	**28**
Medium Trucks	74.83	-14.05	0.75	-1.20	60.33	40.99	33.21	42.42	48.57	48.60	65 dBA:	**57**	**61**
Heavy Trucks	80.05	-9.74	0.75	-1.20	69.86	56.33	44.95	54.16	60.78	60.81	60 dBA:	**122**	**131**
				Total:	**71.55**	**63.86**	**61.78**	**58.09**	**65.82**	**66.26**	55 dBA:	**263**	**282**

FHWA-RD-77-108 HIGHWAY TRAFFIC NOISE PREDICTION MODEL

Scenario: EXISTING WITH ALTERNATIVE ROUTE 2 CONDITIONS

Project: Pacoima Spreading Grounds
Site Conditions: Soft

Road Name: Branford Street **Segment: South of San Fernando Road**

Average Daily Traffic: 11460 Vehicles Vehicle Speed: 35 MPH Vehicle Mix: 2 Roadway Classification: Secondary

	NOISE PARAMETERS AT 60 FEET FROM CENTERLINE (Equiv. Lane Dist: 54.99 ft)										**Centerline Distance to**		
	Noise Adjustments				**Unmitigated Noise Levels**						**Noise Contour (in feet)**		
Vehicle Type	REMEL	Traffic Adj.	Dist Adj.	Finite Adj	Leq Peak	Leq Day	Leq Eve.	Leq Night	Ldn	CNEL		Ldn	CNEL
Automobiles	65.11	-0.64	-0.72	-1.20	62.54	60.04	58.74	52.69	61.12	61.75	70 dBA:	**20**	**22**
Medium Trucks	74.83	-15.52	-0.72	-1.20	57.39	38.05	30.26	39.47	45.63	45.66	65 dBA:	**43**	**46**
Heavy Trucks	80.05	-11.21	-0.72	-1.20	66.91	53.39	42.01	51.22	57.83	57.87	60 dBA:	**93**	**100**
				Total:	**68.61**	**60.91**	**58.84**	**55.14**	**62.88**	**63.32**	55 dBA:	**201**	**215**

Road Name: Sheldon Street **Segment: North of I-5 Northbound On-Ramp**

Average Daily Traffic: 22260 Vehicles Vehicle Speed: 35 MPH Vehicle Mix: 2 Roadway Classification: Secondary

	NOISE PARAMETERS AT 60 FEET FROM CENTERLINE (Equiv. Lane Dist: 54.99 ft)										**Centerline Distance to**		
	Noise Adjustments				**Unmitigated Noise Levels**						**Noise Contour (in feet)**		
Vehicle Type	REMEL	Traffic Adj.	Dist Adj.	Finite Adj	Leq Peak	Leq Day	Leq Eve.	Leq Night	Ldn	CNEL		Ldn	CNEL
Automobiles	65.11	2.24	-0.72	-1.20	65.43	62.93	61.63	55.57	64.01	64.64	70 dBA:	**31**	**33**
Medium Trucks	74.83	-12.63	-0.72	-1.20	60.27	40.93	33.15	42.36	48.51	48.54	65 dBA:	**67**	**72**
Heavy Trucks	80.05	-8.32	-0.72	-1.20	69.80	56.27	44.89	54.10	60.72	60.75	60 dBA:	**145**	**155**
				Total:	**71.49**	**63.80**	**61.72**	**58.03**	**65.76**	**66.20**	55 dBA:	**313**	**335**

Road Name: Sheldon Street **Segment: North of Haddon Avenue**

Average Daily Traffic: 20210 Vehicles Vehicle Speed: 35 MPH Vehicle Mix: 2 Roadway Classification: Secondary

	NOISE PARAMETERS AT 45 FEET FROM CENTERLINE (Equiv. Lane Dist: 38.07 ft)										**Centerline Distance to**		
	Noise Adjustments				**Unmitigated Noise Levels**						**Noise Contour (in feet)**		
Vehicle Type	REMEL	Traffic Adj.	Dist Adj.	Finite Adj	Leq Peak	Leq Day	Leq Eve.	Leq Night	Ldn	CNEL		Ldn	CNEL
Automobiles	65.11	1.82	1.67	-1.20	67.40	64.90	63.60	57.55	65.98	66.61	70 dBA:	**32**	**34**
Medium Trucks	74.83	-13.05	1.67	-1.20	62.25	42.91	35.12	44.33	50.49	50.52	65 dBA:	**68**	**73**
Heavy Trucks	80.05	-8.74	1.67	-1.20	71.78	58.25	46.87	56.08	62.69	62.73	60 dBA:	**148**	**158**
				Total:	**73.47**	**65.78**	**63.70**	**60.00**	**67.74**	**68.18**	55 dBA:	**318**	**340**

Road Name: Sheldon Street **Segment: North of Telfair Avenue**

Average Daily Traffic: 17500 Vehicles Vehicle Speed: 35 MPH Vehicle Mix: 2 Roadway Classification: Secondary

	NOISE PARAMETERS AT 55 FEET FROM CENTERLINE (Equiv. Lane Dist: 49.49 ft)										**Centerline Distance to**		
	Noise Adjustments				**Unmitigated Noise Levels**						**Noise Contour (in feet)**		
Vehicle Type	REMEL	Traffic Adj.	Dist Adj.	Finite Adj	Leq Peak	Leq Day	Leq Eve.	Leq Night	Ldn	CNEL		Ldn	CNEL
Automobiles	65.11	1.19	-0.04	-1.20	65.07	62.57	61.27	55.21	63.65	64.28	70 dBA:	**27**	**29**
Medium Trucks	74.83	-13.68	-0.04	-1.20	59.91	40.57	32.79	42.00	48.15	48.19	65 dBA:	**58**	**63**
Heavy Trucks	80.05	-9.37	-0.04	-1.20	69.44	55.91	44.53	53.74	60.36	60.39	60 dBA:	**126**	**135**
				Total:	**71.13**	**63.44**	**61.36**	**57.67**	**65.40**	**65.84**	55 dBA:	**271**	**290**

FHWA-RD-77-108 HIGHWAY TRAFFIC NOISE PREDICTION MODEL

Scenario: EXISTING WITH ALTERNATIVE ROUTE 2 CONDITIONS

Project: Pacoima Spreading Grounds
Site Conditions: Soft

Road Name: Sheldon Street **Segment: South of San Fernando Road**

Average Daily Traffic: 20100 Vehicles Vehicle Speed: 35 MPH Vehicle Mix: 2 Roadway Classification: Secondary

	NOISE PARAMETERS AT 45 FEET FROM CENTERLINE (Equiv. Lane Dist: 38.07 ft)										**Centerline Distance to**		
	Noise Adjustments				**Unmitigated Noise Levels**						**Noise Contour (in feet)**		
Vehicle Type	REMEL	Traffic Adj.	Dist Adj.	Finite Adj	Leq Peak	Leq Day	Leq Eve.	Leq Night	Ldn	CNEL		Ldn	CNEL
Automobiles	65.11	1.80	1.67	-1.20	67.38	64.88	63.58	57.52	65.96	66.59	70 dBA:	**32**	**34**
Medium Trucks	74.83	-13.08	1.67	-1.20	62.22	42.88	35.10	44.31	50.46	50.50	65 dBA:	**68**	**73**
Heavy Trucks	80.05	-8.77	1.67	-1.20	71.75	58.22	46.85	56.05	62.67	62.70	60 dBA:	**147**	**157**
				Total:	**73.44**	**65.75**	**63.68**	**59.98**	**67.71**	**68.15**	55 dBA:	**317**	**339**

Road Name: San Fernando Road **Segment: West of Sheldon Street**

Average Daily Traffic: 16880 Vehicles Vehicle Speed: 35 MPH Vehicle Mix: 2 Roadway Classification: Major

	NOISE PARAMETERS AT 40 FEET FROM CENTERLINE (Equiv. Lane Dist: 26.46 ft)										**Centerline Distance to**		
	Noise Adjustments				**Unmitigated Noise Levels**						**Noise Contour (in feet)**		
Vehicle Type	REMEL	Traffic Adj.	Dist Adj.	Finite Adj	Leq Peak	Leq Day	Leq Eve.	Leq Night	Ldn	CNEL		Ldn	CNEL
Automobiles	65.11	1.04	4.04	-1.20	68.99	66.49	65.19	59.14	67.57	68.20	70 dBA:	**36**	**39**
Medium Trucks	74.83	-13.84	4.04	-1.20	63.84	44.49	36.71	45.92	52.07	52.11	65 dBA:	**78**	**83**
Heavy Trucks	80.05	-9.53	4.04	-1.20	73.36	59.83	48.46	57.67	64.28	64.31	60 dBA:	**167**	**179**
				Total:	**75.06**	**67.36**	**65.29**	**61.59**	**69.32**	**69.76**	55 dBA:	**361**	**386**

Road Name: San Fernando Road **Segment: West of Branford Street**

Average Daily Traffic: 16770 Vehicles Vehicle Speed: 35 MPH Vehicle Mix: 2 Roadway Classification: Major

	NOISE PARAMETERS AT 85 FEET FROM CENTERLINE (Equiv. Lane Dist: 79.53 ft)										**Centerline Distance to**		
	Noise Adjustments				**Unmitigated Noise Levels**						**Noise Contour (in feet)**		
Vehicle Type	REMEL	Traffic Adj.	Dist Adj.	Finite Adj	Leq Peak	Leq Day	Leq Eve.	Leq Night	Ldn	CNEL		Ldn	CNEL
Automobiles	65.11	1.01	-3.13	-1.20	61.79	59.29	57.99	51.94	60.37	61.00	70 dBA:	**25**	**27**
Medium Trucks	74.83	-13.86	-3.13	-1.20	56.64	37.29	29.51	38.72	44.88	44.91	65 dBA:	**55**	**58**
Heavy Trucks	80.05	-9.55	-3.13	-1.20	66.16	52.64	41.26	50.47	57.08	57.11	60 dBA:	**118**	**126**
				Total:	**67.86**	**60.16**	**58.09**	**54.39**	**62.13**	**62.57**	55 dBA:	**254**	**272**

FHWA-RD-77-108 HIGHWAY TRAFFIC NOISE PREDICTION MODEL

Scenario: EXISTING WITH ALTERNATIVE ROUTE 3 CONDITIONS

Project: Pacoima Spreading Grounds
Site Conditions: Soft

	Vehicle Mix 1 (Arterials)				Vehicle Mix 2 (Arterial With Project)				Vehicle Mix 3 (I-5)			
Vehicle Type	Day	Evening	Night	Daily	Day	Evening	Night	Daily	Day	Evenin	Night	Daily
Automobiles	69.50%	12.90%	9.60%	92.00%	67.50%	12.51%	9.31%	89.32%	63.84%	13.08%	15.31%	92.23%
Medium Trucks	1.44%	0.06%	1.50%	3.00%	1.40%	0.06%	1.45%	2.91%	1.22%	0.22%	0.62%	2.07%
Heavy Trucks	9.00%	0.10%	2.50%	5.00%	5.32%	0.10%	2.42%	7.85%	3.12%	0.30%	2.28%	5.70%

Road Name: Arleta Avenue **Segment: North of Devonshire Street**

Average Daily Traffic: 14430 Vehicles Vehicle Speed: 40 MPH Vehicle Mix: 2 Roadway Classification: Secondary

	NOISE PARAMETERS AT 150 FEET FROM CENTERLINE (Equiv. Lane Dist: 148.07 ft)										**Centerline Distance to**		
	Noise Adjustments				**Unmitigated Noise Levels**						**Noise Contour (in feet)**		
Vehicle Type	REMEL	Traffic Adj.	Dist Adj.	Finite Adj	Leq Peak	Leq Day	Leq Eve.	Leq Night	Ldn	CNEL		Ldn	CNEL
Automobiles	67.36	-0.22	-7.18	-1.20	58.76	56.26	54.96	48.91	57.34	57.97	70 dBA:	**27**	**29**
Medium Trucks	76.31	-15.10	-7.18	-1.20	52.84	33.50	25.72	34.92	41.08	41.11	65 dBA:	**58**	**62**
Heavy Trucks	81.16	-10.79	-7.18	-1.20	62.00	48.47	37.09	46.30	52.92	52.95	60 dBA:	**124**	**133**
				Total:	**64.03**	**56.95**	**55.04**	**50.92**	**58.75**	**59.23**	55 dBA:	**267**	**287**

Road Name: Arleta Avenue **Segment: East of Devonshire Street**

Average Daily Traffic: 18960 Vehicles Vehicle Speed: 40 MPH Vehicle Mix: 2 Roadway Classification: Secondary

	NOISE PARAMETERS AT 60 FEET FROM CENTERLINE (Equiv. Lane Dist: 54.99 ft)										**Centerline Distance to**		
	Noise Adjustments				**Unmitigated Noise Levels**						**Noise Contour (in feet)**		
Vehicle Type	REMEL	Traffic Adj.	Dist Adj.	Finite Adj	Leq Peak	Leq Day	Leq Eve.	Leq Night	Ldn	CNEL		Ldn	CNEL
Automobiles	67.36	0.96	-0.72	-1.20	66.40	63.90	62.60	56.54	64.98	65.61	70 dBA:	**34**	**37**
Medium Trucks	76.31	-13.91	-0.72	-1.20	60.48	41.14	33.35	42.56	48.72	48.75	65 dBA:	**74**	**80**
Heavy Trucks	81.16	-9.60	-0.72	-1.20	69.63	56.11	44.73	53.94	60.55	60.59	60 dBA:	**160**	**172**
				Total:	**71.67**	**64.59**	**62.67**	**58.55**	**66.39**	**66.86**	55 dBA:	**345**	**371**

Road Name: Paxton Street **Segment: North of Arleta Avenue**

Average Daily Traffic: 14430 Vehicles Vehicle Speed: 40 MPH Vehicle Mix: 2 Roadway Classification: Secondary

	NOISE PARAMETERS AT 55 FEET FROM CENTERLINE (Equiv. Lane Dist: 49.49 ft)										**Centerline Distance to**		
	Noise Adjustments				**Unmitigated Noise Levels**						**Noise Contour (in feet)**		
Vehicle Type	REMEL	Traffic Adj.	Dist Adj.	Finite Adj	Leq Peak	Leq Day	Leq Eve.	Leq Night	Ldn	CNEL		Ldn	CNEL
Automobiles	67.36	-0.22	-0.04	-1.20	65.90	63.40	62.10	56.05	64.48	65.11	70 dBA:	**29**	**31**
Medium Trucks	76.31	-15.10	-0.04	-1.20	59.98	40.64	32.86	42.06	48.22	48.25	65 dBA:	**63**	**68**
Heavy Trucks	81.16	-10.79	-0.04	-1.20	69.14	55.61	44.23	53.44	60.06	60.09	60 dBA:	**136**	**146**
				Total:	**71.17**	**64.09**	**62.18**	**58.06**	**65.89**	**66.37**	55 dBA:	**293**	**315**

FHWA-RD-77-108 HIGHWAY TRAFFIC NOISE PREDICTION MODEL

Scenario: EXISTING WITH ALTERNATIVE ROUTE 3 CONDITIONS

Project: Pacoima Spreading Grounds
Site Conditions: Soft

Road Name: Paxton Street **Segment: North of I-5 Northbound Ramps**

Average Daily Traffic: 15110 Vehicles Vehicle Speed: 40 MPH Vehicle Mix: 2 Roadway Classification: Secondary

	NOISE PARAMETERS AT 50 FEET FROM CENTERLINE (Equiv. Lane Dist: 43.86 ft)										**Centerline Distance to**		
	Noise Adjustments				**Unmitigated Noise Levels**						**Noise Contour (in feet)**		
Vehicle Type	REMEL	Traffic Adj.	Dist Adj.	Finite Adj	Leq Peak	Leq Day	Leq Eve.	Leq Night	Ldn	CNEL		Ldn	CNEL
Automobiles	67.36	-0.02	0.75	-1.20	66.89	64.39	63.09	57.03	65.47	66.10	70 dBA:	**31**	**33**
Medium Trucks	76.31	-14.90	0.75	-1.20	60.97	41.62	33.84	43.05	49.20	49.24	65 dBA:	**67**	**72**
Heavy Trucks	81.16	-10.59	0.75	-1.20	70.12	56.59	45.22	54.42	61.04	61.07	60 dBA:	**144**	**155**
				Total:	**72.15**	**65.07**	**63.16**	**59.04**	**66.88**	**67.35**	55 dBA:	**310**	**333**

Road Name: Laurel Canyon Boulevard **Segment: West of I-5 Southbound Ramps**

Average Daily Traffic: 21820 Vehicles Vehicle Speed: 35 MPH Vehicle Mix: 2 Roadway Classification: Major

	NOISE PARAMETERS AT 55 FEET FROM CENTERLINE (Equiv. Lane Dist: 46.1 ft)										**Centerline Distance to**		
	Noise Adjustments				**Unmitigated Noise Levels**						**Noise Contour (in feet)**		
Vehicle Type	REMEL	Traffic Adj.	Dist Adj.	Finite Adj	Leq Peak	Leq Day	Leq Eve.	Leq Night	Ldn	CNEL		Ldn	CNEL
Automobiles	65.11	2.15	0.43	-1.20	66.49	63.99	62.69	56.63	65.07	65.70	70 dBA:	**34**	**36**
Medium Trucks	74.83	-12.72	0.43	-1.20	61.33	41.99	34.21	43.42	49.57	49.61	65 dBA:	**73**	**78**
Heavy Trucks	80.05	-8.41	0.43	-1.20	70.86	57.33	45.96	55.16	61.78	61.81	60 dBA:	**157**	**168**
				Total:	**72.55**	**64.86**	**62.79**	**59.09**	**66.82**	**67.26**	55 dBA:	**338**	**361**

Road Name: Laurel Canyon Boulevard **Segment: West of I-5 Northbound Off-Ramp**

Average Daily Traffic: 19560 Vehicles Vehicle Speed: 35 MPH Vehicle Mix: 2 Roadway Classification: Major

	NOISE PARAMETERS AT 55 FEET FROM CENTERLINE (Equiv. Lane Dist: 46.1 ft)										**Centerline Distance to**		
	Noise Adjustments				**Unmitigated Noise Levels**						**Noise Contour (in feet)**		
Vehicle Type	REMEL	Traffic Adj.	Dist Adj.	Finite Adj	Leq Peak	Leq Day	Leq Eve.	Leq Night	Ldn	CNEL		Ldn	CNEL
Automobiles	65.11	1.68	0.43	-1.20	66.01	63.51	62.21	56.16	64.59	65.22	70 dBA:	**31**	**34**
Medium Trucks	74.83	-13.20	0.43	-1.20	60.86	41.52	33.73	42.94	49.10	49.13	65 dBA:	**68**	**72**
Heavy Trucks	80.05	-8.89	0.43	-1.20	70.39	56.86	45.48	54.69	61.31	61.34	60 dBA:	**146**	**156**
				Total:	**72.08**	**64.39**	**62.31**	**58.62**	**66.35**	**66.79**	55 dBA:	**314**	**336**

Road Name: Branford Street **Segment: North of Laurel Canyon Boulevard**

Average Daily Traffic: 15840 Vehicles Vehicle Speed: 35 MPH Vehicle Mix: 2 Roadway Classification: Secondary

	NOISE PARAMETERS AT 50 FEET FROM CENTERLINE (Equiv. Lane Dist: 43.86 ft)										**Centerline Distance to**		
	Noise Adjustments				**Unmitigated Noise Levels**						**Noise Contour (in feet)**		
Vehicle Type	REMEL	Traffic Adj.	Dist Adj.	Finite Adj	Leq Peak	Leq Day	Leq Eve.	Leq Night	Ldn	CNEL		Ldn	CNEL
Automobiles	65.11	0.76	0.75	-1.20	65.42	62.92	61.62	55.57	64.00	64.63	70 dBA:	**26**	**28**
Medium Trucks	74.83	-14.11	0.75	-1.20	60.27	40.92	33.14	42.35	48.50	48.54	65 dBA:	**56**	**60**
Heavy Trucks	80.05	-9.80	0.75	-1.20	69.79	56.26	44.89	54.10	60.71	60.74	60 dBA:	**121**	**129**
				Total:	**71.49**	**63.79**	**61.72**	**58.02**	**65.75**	**66.19**	55 dBA:	**261**	**279**

FHWA-RD-77-108 HIGHWAY TRAFFIC NOISE PREDICTION MODEL

Scenario: EXISTING WITH ALTERNATIVE ROUTE 3 CONDITIONS

Project: Pacoima Spreading Grounds
Site Conditions: Soft

Road Name: Branford Street **Segment: South of San Fernando Road**

Average Daily Traffic: 11220 Vehicles Vehicle Speed: 35 MPH Vehicle Mix: 2 Roadway Classification: Secondary

	NOISE PARAMETERS AT 60 FEET FROM CENTERLINE (Equiv. Lane Dist: 54.99 ft)										**Centerline Distance to**		
	Noise Adjustments				**Unmitigated Noise Levels**						**Noise Contour (in feet)**		
Vehicle Type	REMEL	Traffic Adj.	Dist Adj.	Finite Adj	Leq Peak	Leq Day	Leq Eve.	Leq Night	Ldn	CNEL		Ldn	CNEL
Automobiles	65.11	-0.74	-0.72	-1.20	62.45	59.95	58.65	52.60	61.03	61.66	70 dBA:	**20**	**21**
Medium Trucks	74.83	-15.61	-0.72	-1.20	57.30	37.95	30.17	39.38	45.53	45.57	65 dBA:	**43**	**46**
Heavy Trucks	80.05	-11.30	-0.72	-1.20	66.82	53.29	41.92	51.13	57.74	57.77	60 dBA:	**92**	**98**
				Total:	**68.52**	**60.82**	**58.75**	**55.05**	**62.78**	**63.22**	55 dBA:	**198**	**212**

Road Name: Sheldon Street **Segment: North of I-5 Northbound On-Ramp**

Average Daily Traffic: 22310 Vehicles Vehicle Speed: 35 MPH Vehicle Mix: 2 Roadway Classification: Secondary

	NOISE PARAMETERS AT 60 FEET FROM CENTERLINE (Equiv. Lane Dist: 54.99 ft)										**Centerline Distance to**		
	Noise Adjustments				**Unmitigated Noise Levels**						**Noise Contour (in feet)**		
Vehicle Type	REMEL	Traffic Adj.	Dist Adj.	Finite Adj	Leq Peak	Leq Day	Leq Eve.	Leq Night	Ldn	CNEL		Ldn	CNEL
Automobiles	65.11	2.25	-0.72	-1.20	65.44	62.94	61.64	55.58	64.02	64.65	70 dBA:	**31**	**34**
Medium Trucks	74.83	-12.62	-0.72	-1.20	60.28	40.94	33.16	42.36	48.52	48.55	65 dBA:	**68**	**72**
Heavy Trucks	80.05	-8.31	-0.72	-1.20	69.81	56.28	44.90	54.11	60.73	60.76	60 dBA:	**145**	**156**
				Total:	**71.50**	**63.81**	**61.73**	**58.04**	**65.77**	**66.21**	55 dBA:	**313**	**335**

Road Name: Sheldon Street **Segment: North of Haddon Avenue**

Average Daily Traffic: 20260 Vehicles Vehicle Speed: 35 MPH Vehicle Mix: 2 Roadway Classification: Secondary

	NOISE PARAMETERS AT 45 FEET FROM CENTERLINE (Equiv. Lane Dist: 38.07 ft)										**Centerline Distance to**		
	Noise Adjustments				**Unmitigated Noise Levels**						**Noise Contour (in feet)**		
Vehicle Type	REMEL	Traffic Adj.	Dist Adj.	Finite Adj	Leq Peak	Leq Day	Leq Eve.	Leq Night	Ldn	CNEL		Ldn	CNEL
Automobiles	65.11	1.83	1.67	-1.20	67.41	64.91	63.61	57.56	65.99	66.62	70 dBA:	**32**	**34**
Medium Trucks	74.83	-13.04	1.67	-1.20	62.26	42.92	35.13	44.34	50.50	50.53	65 dBA:	**69**	**73**
Heavy Trucks	80.05	-8.73	1.67	-1.20	71.79	58.26	46.88	56.09	62.71	62.74	60 dBA:	**148**	**158**
				Total:	**73.48**	**65.79**	**63.71**	**60.02**	**67.75**	**68.19**	55 dBA:	**318**	**341**

Road Name: Sheldon Street **Segment: North of Telfair Avenue**

Average Daily Traffic: 17550 Vehicles Vehicle Speed: 35 MPH Vehicle Mix: 2 Roadway Classification: Secondary

	NOISE PARAMETERS AT 55 FEET FROM CENTERLINE (Equiv. Lane Dist: 49.49 ft)										**Centerline Distance to**		
	Noise Adjustments				**Unmitigated Noise Levels**						**Noise Contour (in feet)**		
Vehicle Type	REMEL	Traffic Adj.	Dist Adj.	Finite Adj	Leq Peak	Leq Day	Leq Eve.	Leq Night	Ldn	CNEL		Ldn	CNEL
Automobiles	65.11	1.21	-0.04	-1.20	65.08	62.58	61.28	55.23	63.66	64.29	70 dBA:	**27**	**29**
Medium Trucks	74.83	-13.67	-0.04	-1.20	59.93	40.58	32.80	42.01	48.16	48.20	65 dBA:	**59**	**63**
Heavy Trucks	80.05	-9.36	-0.04	-1.20	69.45	55.92	44.55	53.76	60.37	60.40	60 dBA:	**126**	**135**
				Total:	**71.15**	**63.45**	**61.38**	**57.68**	**65.41**	**65.85**	55 dBA:	**272**	**291**

FHWA-RD-77-108 HIGHWAY TRAFFIC NOISE PREDICTION MODEL

Scenario: EXISTING WITH ALTERNATIVE ROUTE 3 CONDITIONS

Project: Pacoima Spreading Grounds
Site Conditions: Soft

Road Name: Sheldon Street **Segment: South of San Fernando Road**

Average Daily Traffic: 20150 Vehicles Vehicle Speed: 35 MPH Vehicle Mix: 2 Roadway Classification: Secondary

	NOISE PARAMETERS AT 45 FEET FROM CENTERLINE (Equiv. Lane Dist: 38.07 ft)										**Centerline Distance to**		
	Noise Adjustments				**Unmitigated Noise Levels**						**Noise Contour (in feet)**		
Vehicle Type	REMEL	Traffic Adj.	Dist Adj.	Finite Adj	Leq Peak	Leq Day	Leq Eve.	Leq Night	Ldn	CNEL		Ldn	CNEL
Automobiles	65.11	1.81	1.67	-1.20	67.39	64.89	63.59	57.54	65.97	66.60	70 dBA:	**32**	**34**
Medium Trucks	74.83	-13.07	1.67	-1.20	62.23	42.89	35.11	44.32	50.47	50.51	65 dBA:	**68**	**73**
Heavy Trucks	80.05	-8.76	1.67	-1.20	71.76	58.23	46.86	56.06	62.68	62.71	60 dBA:	**147**	**158**
				Total:	**73.46**	**65.76**	**63.69**	**59.99**	**67.72**	**68.16**	55 dBA:	**317**	**339**

Road Name: San Fernando Road **Segment: West of Sheldon Street**

Average Daily Traffic: 16830 Vehicles Vehicle Speed: 35 MPH Vehicle Mix: 2 Roadway Classification: Major

	NOISE PARAMETERS AT 40 FEET FROM CENTERLINE (Equiv. Lane Dist: 26.46 ft)										**Centerline Distance to**		
	Noise Adjustments				**Unmitigated Noise Levels**						**Noise Contour (in feet)**		
Vehicle Type	REMEL	Traffic Adj.	Dist Adj.	Finite Adj	Leq Peak	Leq Day	Leq Eve.	Leq Night	Ldn	CNEL		Ldn	CNEL
Automobiles	65.11	1.02	4.04	-1.20	68.98	66.48	65.18	59.12	67.56	68.19	70 dBA:	**36**	**38**
Medium Trucks	74.83	-13.85	4.04	-1.20	63.82	44.48	36.70	45.91	52.06	52.10	65 dBA:	**78**	**83**
Heavy Trucks	80.05	-9.54	4.04	-1.20	73.35	59.82	48.44	57.65	64.27	64.30	60 dBA:	**167**	**179**
				Total:	**75.04**	**67.35**	**65.27**	**61.58**	**69.31**	**69.75**	55 dBA:	**360**	**385**

Road Name: San Fernando Road **Segment: West of Branford Street**

Average Daily Traffic: 16770 Vehicles Vehicle Speed: 35 MPH Vehicle Mix: 2 Roadway Classification: Major

	NOISE PARAMETERS AT 85 FEET FROM CENTERLINE (Equiv. Lane Dist: 79.53 ft)										**Centerline Distance to**		
	Noise Adjustments				**Unmitigated Noise Levels**						**Noise Contour (in feet)**		
Vehicle Type	REMEL	Traffic Adj.	Dist Adj.	Finite Adj	Leq Peak	Leq Day	Leq Eve.	Leq Night	Ldn	CNEL		Ldn	CNEL
Automobiles	65.11	1.01	-3.13	-1.20	61.79	59.29	57.99	51.94	60.37	61.00	70 dBA:	**25**	**27**
Medium Trucks	74.83	-13.86	-3.13	-1.20	56.64	37.29	29.51	38.72	44.88	44.91	65 dBA:	**55**	**58**
Heavy Trucks	80.05	-9.55	-3.13	-1.20	66.16	52.64	41.26	50.47	57.08	57.11	60 dBA:	**118**	**126**
				Total:	**67.86**	**60.16**	**58.09**	**54.39**	**62.13**	**62.57**	55 dBA:	**254**	**272**

FHWA-RD-77-108 HIGHWAY TRAFFIC NOISE PREDICTION MODEL

Scenario: EXISTING WITH ALTERNATIVE ROUTE 4 CONDITIONS

Project: Pacoima Spreading Grounds
Site Conditions: Soft

	Vehicle Mix 1 (Arterials)				Vehicle Mix 2 (Arterial With Project)				Vehicle Mix 3 (I-5)			
Vehicle Type	Day	Evening	Night	Daily	Day	Evening	Night	Daily	Day	Evenin	Night	Daily
Automobiles	69.50%	12.90%	9.60%	92.00%	67.50%	12.51%	9.31%	89.32%	63.84%	13.08%	15.31%	92.23%
Medium Trucks	1.44%	0.06%	1.50%	3.00%	1.40%	0.06%	1.45%	2.91%	1.22%	0.22%	0.62%	2.07%
Heavy Trucks	2.40%	0.10%	2.50%	5.00%	5.32%	0.10%	2.42%	7.85%	3.12%	0.30%	2.28%	5.70%

Road Name: Arleta Avenue **Segment: North of Devonshire Street**

Average Daily Traffic: 14230 Vehicles Vehicle Speed: 40 MPH Vehicle Mix: 2 Roadway Classification: Secondary

	NOISE PARAMETERS AT 150 FEET FROM CENTERLINE (Equiv. Lane Dist: 148.07 ft)										**Centerline Distance to**		
	Noise Adjustments				**Unmitigated Noise Levels**						**Noise Contour (in feet)**		
Vehicle Type	REMEL	Traffic Adj.	Dist Adj.	Finite Adj	Leq Peak	Leq Day	Leq Eve.	Leq Night	Ldn	CNEL		Ldn	CNEL
Automobiles	67.36	-0.28	-7.18	-1.20	58.70	56.20	54.90	48.85	57.28	57.91	70 dBA:	**26**	**28**
Medium Trucks	76.31	-15.16	-7.18	-1.20	52.78	33.44	25.66	34.86	41.02	41.05	65 dBA:	**57**	**61**
Heavy Trucks	81.16	-10.85	-7.18	-1.20	61.94	48.41	37.03	46.24	52.86	52.89	60 dBA:	**123**	**132**
				Total:	**63.97**	**56.89**	**54.98**	**50.86**	**58.69**	**59.17**	55 dBA:	**264**	**284**

Road Name: Arleta Avenue **Segment: East of Devonshire Street**

Average Daily Traffic: 18690 Vehicles Vehicle Speed: 40 MPH Vehicle Mix: 2 Roadway Classification: Secondary

	NOISE PARAMETERS AT 60 FEET FROM CENTERLINE (Equiv. Lane Dist: 54.99 ft)										**Centerline Distance to**		
	Noise Adjustments				**Unmitigated Noise Levels**						**Noise Contour (in feet)**		
Vehicle Type	REMEL	Traffic Adj.	Dist Adj.	Finite Adj	Leq Peak	Leq Day	Leq Eve.	Leq Night	Ldn	CNEL		Ldn	CNEL
Automobiles	67.36	0.90	-0.72	-1.20	66.34	63.84	62.54	56.48	64.92	65.55	70 dBA:	**34**	**37**
Medium Trucks	76.31	-13.97	-0.72	-1.20	60.42	41.07	33.29	42.50	48.65	48.69	65 dBA:	**74**	**79**
Heavy Trucks	81.16	-9.66	-0.72	-1.20	69.57	56.04	44.67	53.88	60.49	60.52	60 dBA:	**159**	**170**
				Total:	**71.60**	**64.53**	**62.61**	**58.49**	**66.33**	**66.80**	55 dBA:	**342**	**367**

Road Name: Paxton Street **Segment: North of Arleta Avenue**

Average Daily Traffic: 14220 Vehicles Vehicle Speed: 40 MPH Vehicle Mix: 2 Roadway Classification: Secondary

	NOISE PARAMETERS AT 55 FEET FROM CENTERLINE (Equiv. Lane Dist: 49.49 ft)										**Centerline Distance to**		
	Noise Adjustments				**Unmitigated Noise Levels**						**Noise Contour (in feet)**		
Vehicle Type	REMEL	Traffic Adj.	Dist Adj.	Finite Adj	Leq Peak	Leq Day	Leq Eve.	Leq Night	Ldn	CNEL		Ldn	CNEL
Automobiles	67.36	-0.29	-0.04	-1.20	65.84	63.34	62.04	55.98	64.42	65.05	70 dBA:	**29**	**31**
Medium Trucks	76.31	-15.16	-0.04	-1.20	59.92	40.57	32.79	42.00	48.15	48.19	65 dBA:	**62**	**67**
Heavy Trucks	81.16	-10.85	-0.04	-1.20	69.07	55.54	44.17	53.38	59.99	60.02	60 dBA:	**135**	**145**
				Total:	**71.10**	**64.02**	**62.11**	**57.99**	**65.83**	**66.30**	55 dBA:	**290**	**312**

FHWA-RD-77-108 HIGHWAY TRAFFIC NOISE PREDICTION MODEL

Scenario: EXISTING WITH ALTERNATIVE ROUTE 4 CONDITIONS

Project: Pacoima Spreading Grounds
Site Conditions: Soft

Road Name: Paxton Street **Segment: North of I-5 Northbound Ramps**

Average Daily Traffic: 14900 Vehicles Vehicle Speed: 40 MPH Vehicle Mix: 2 Roadway Classification: Secondary

	NOISE PARAMETERS AT 50 FEET FROM CENTERLINE (Equiv. Lane Dist: 43.86 ft)										**Centerline Distance to**		
	Noise Adjustments				**Unmitigated Noise Levels**						**Noise Contour (in feet)**		
Vehicle Type	REMEL	Traffic Adj.	Dist Adj.	Finite Adj	Leq Peak	Leq Day	Leq Eve.	Leq Night	Ldn	CNEL		Ldn	CNEL
Automobiles	67.36	-0.08	0.75	-1.20	66.82	64.33	63.03	56.97	65.41	66.04	70 dBA:	**31**	**33**
Medium Trucks	76.31	-14.96	0.75	-1.20	60.91	41.56	33.78	42.99	49.14	49.18	65 dBA:	**66**	**71**
Heavy Trucks	81.16	-10.65	0.75	-1.20	70.06	56.53	45.16	54.36	60.98	61.01	60 dBA:	**142**	**153**
				Total:	**72.09**	**65.01**	**63.10**	**58.98**	**66.82**	**67.29**	55 dBA:	**307**	**330**

Road Name: Laurel Canyon Boulevard **Segment: West of I-5 Southbound Ramps**

Average Daily Traffic: 21500 Vehicles Vehicle Speed: 35 MPH Vehicle Mix: 2 Roadway Classification: Major

	NOISE PARAMETERS AT 55 FEET FROM CENTERLINE (Equiv. Lane Dist: 46.1 ft)										**Centerline Distance to**		
	Noise Adjustments				**Unmitigated Noise Levels**						**Noise Contour (in feet)**		
Vehicle Type	REMEL	Traffic Adj.	Dist Adj.	Finite Adj	Leq Peak	Leq Day	Leq Eve.	Leq Night	Ldn	CNEL		Ldn	CNEL
Automobiles	65.11	2.09	0.43	-1.20	66.42	63.93	62.62	56.57	65.00	65.63	70 dBA:	**33**	**36**
Medium Trucks	74.83	-12.78	0.43	-1.20	61.27	41.93	34.15	43.35	49.51	49.54	65 dBA:	**72**	**77**
Heavy Trucks	80.05	-8.48	0.43	-1.20	70.80	57.27	45.89	55.10	61.72	61.75	60 dBA:	**155**	**166**
				Total:	**72.49**	**64.80**	**62.72**	**59.03**	**66.76**	**67.20**	55 dBA:	**334**	**358**

Road Name: Laurel Canyon Boulevard **Segment: West of I-5 Northbound Off-Ramp**

Average Daily Traffic: 19270 Vehicles Vehicle Speed: 35 MPH Vehicle Mix: 2 Roadway Classification: Major

	NOISE PARAMETERS AT 55 FEET FROM CENTERLINE (Equiv. Lane Dist: 46.1 ft)										**Centerline Distance to**		
	Noise Adjustments				**Unmitigated Noise Levels**						**Noise Contour (in feet)**		
Vehicle Type	REMEL	Traffic Adj.	Dist Adj.	Finite Adj	Leq Peak	Leq Day	Leq Eve.	Leq Night	Ldn	CNEL		Ldn	CNEL
Automobiles	65.11	1.61	0.43	-1.20	65.95	63.45	62.15	56.09	64.53	65.16	70 dBA:	**31**	**33**
Medium Trucks	74.83	-13.26	0.43	-1.20	60.79	41.45	33.67	42.88	49.03	49.07	65 dBA:	**67**	**72**
Heavy Trucks	80.05	-8.95	0.43	-1.20	70.32	56.79	45.42	54.62	61.24	61.27	60 dBA:	**144**	**154**
				Total:	**72.01**	**64.32**	**62.25**	**58.55**	**66.28**	**66.72**	55 dBA:	**311**	**333**

Road Name: Branford Street **Segment: North of Laurel Canyon Boulevard**

Average Daily Traffic: 15600 Vehicles Vehicle Speed: 35 MPH Vehicle Mix: 2 Roadway Classification: Secondary

	NOISE PARAMETERS AT 50 FEET FROM CENTERLINE (Equiv. Lane Dist: 43.86 ft)										**Centerline Distance to**		
	Noise Adjustments				**Unmitigated Noise Levels**						**Noise Contour (in feet)**		
Vehicle Type	REMEL	Traffic Adj.	Dist Adj.	Finite Adj	Leq Peak	Leq Day	Leq Eve.	Leq Night	Ldn	CNEL		Ldn	CNEL
Automobiles	65.11	0.69	0.75	-1.20	65.35	62.86	61.55	55.50	63.93	64.57	70 dBA:	**26**	**28**
Medium Trucks	74.83	-14.18	0.75	-1.20	60.20	40.86	33.08	42.28	48.44	48.47	65 dBA:	**56**	**59**
Heavy Trucks	80.05	-9.87	0.75	-1.20	69.73	56.20	44.82	54.03	60.65	60.68	60 dBA:	**120**	**128**
				Total:	**71.42**	**63.73**	**61.65**	**57.96**	**65.69**	**66.13**	55 dBA:	**258**	**276**

FHWA-RD-77-108 HIGHWAY TRAFFIC NOISE PREDICTION MODEL

Scenario: EXISTING WITH ALTERNATIVE ROUTE 4 CONDITIONS

Project: Pacoima Spreading Grounds
Site Conditions: Soft

Road Name: Branford Street **Segment: South of San Fernando Road**

Average Daily Traffic: 11050 Vehicles Vehicle Speed: 35 MPH Vehicle Mix: 2 Roadway Classification: Secondary

	NOISE PARAMETERS AT 60 FEET FROM CENTERLINE (Equiv. Lane Dist: 54.99 ft)										**Centerline Distance to**		
	Noise Adjustments				**Unmitigated Noise Levels**						**Noise Contour (in feet)**		
Vehicle Type	REMEL	Traffic Adj.	Dist Adj.	Finite Adj	Leq Peak	Leq Day	Leq Eve.	Leq Night	Ldn	CNEL		Ldn	CNEL
Automobiles	65.11	-0.80	-0.72	-1.20	62.38	59.89	58.58	52.53	60.96	61.59	70 dBA:	**20**	**21**
Medium Trucks	74.83	-15.68	-0.72	-1.20	57.23	37.89	30.11	39.31	45.47	45.50	65 dBA:	**42**	**45**
Heavy Trucks	80.05	-11.37	-0.72	-1.20	66.76	53.23	41.85	51.06	57.68	57.71	60 dBA:	**91**	**97**
				Total:	**68.45**	**60.76**	**58.68**	**54.99**	**62.72**	**63.16**	55 dBA:	**196**	**210**

Road Name: Sheldon Street **Segment: North of I-5 Northbound On-Ramp**

Average Daily Traffic: 22000 Vehicles Vehicle Speed: 35 MPH Vehicle Mix: 2 Roadway Classification: Secondary

	NOISE PARAMETERS AT 60 FEET FROM CENTERLINE (Equiv. Lane Dist: 54.99 ft)										**Centerline Distance to**		
	Noise Adjustments				**Unmitigated Noise Levels**						**Noise Contour (in feet)**		
Vehicle Type	REMEL	Traffic Adj.	Dist Adj.	Finite Adj	Leq Peak	Leq Day	Leq Eve.	Leq Night	Ldn	CNEL		Ldn	CNEL
Automobiles	65.11	2.19	-0.72	-1.20	65.37	62.88	61.57	55.52	63.95	64.59	70 dBA:	**31**	**33**
Medium Trucks	74.83	-12.68	-0.72	-1.20	60.22	40.88	33.10	42.30	48.46	48.49	65 dBA:	**67**	**72**
Heavy Trucks	80.05	-8.38	-0.72	-1.20	69.75	56.22	44.84	54.05	60.67	60.70	60 dBA:	**144**	**154**
				Total:	**71.44**	**63.75**	**61.67**	**57.98**	**65.71**	**66.15**	55 dBA:	**310**	**332**

Road Name: Sheldon Street **Segment: North of Haddon Avenue**

Average Daily Traffic: 19970 Vehicles Vehicle Speed: 35 MPH Vehicle Mix: 2 Roadway Classification: Secondary

	NOISE PARAMETERS AT 45 FEET FROM CENTERLINE (Equiv. Lane Dist: 38.07 ft)										**Centerline Distance to**		
	Noise Adjustments				**Unmitigated Noise Levels**						**Noise Contour (in feet)**		
Vehicle Type	REMEL	Traffic Adj.	Dist Adj.	Finite Adj	Leq Peak	Leq Day	Leq Eve.	Leq Night	Ldn	CNEL		Ldn	CNEL
Automobiles	65.11	1.77	1.67	-1.20	67.35	64.85	63.55	57.50	65.93	66.56	70 dBA:	**32**	**34**
Medium Trucks	74.83	-13.11	1.67	-1.20	62.20	42.85	35.07	44.28	50.43	50.47	65 dBA:	**68**	**73**
Heavy Trucks	80.05	-8.80	1.67	-1.20	71.72	58.19	46.82	56.03	62.64	62.67	60 dBA:	**146**	**157**
				Total:	**73.42**	**65.72**	**63.65**	**59.95**	**67.68**	**68.12**	55 dBA:	**315**	**337**

Road Name: Sheldon Street **Segment: North of Telfair Avenue**

Average Daily Traffic: 18250 Vehicles Vehicle Speed: 35 MPH Vehicle Mix: 2 Roadway Classification: Secondary

	NOISE PARAMETERS AT 55 FEET FROM CENTERLINE (Equiv. Lane Dist: 49.49 ft)										**Centerline Distance to**		
	Noise Adjustments				**Unmitigated Noise Levels**						**Noise Contour (in feet)**		
Vehicle Type	REMEL	Traffic Adj.	Dist Adj.	Finite Adj	Leq Peak	Leq Day	Leq Eve.	Leq Night	Ldn	CNEL		Ldn	CNEL
Automobiles	65.11	1.38	-0.04	-1.20	65.25	62.75	61.45	55.40	63.83	64.46	70 dBA:	**28**	**30**
Medium Trucks	74.83	-13.50	-0.04	-1.20	60.10	40.75	32.97	42.18	48.33	48.37	65 dBA:	**60**	**64**
Heavy Trucks	80.05	-9.19	-0.04	-1.20	69.62	56.09	44.72	53.93	60.54	60.57	60 dBA:	**130**	**139**
				Total:	**71.32**	**63.62**	**61.55**	**57.85**	**65.58**	**66.02**	55 dBA:	**279**	**299**

FHWA-RD-77-108 HIGHWAY TRAFFIC NOISE PREDICTION MODEL

Scenario: EXISTING WITH ALTERNATIVE ROUTE 4 CONDITIONS

Project: Pacoima Spreading Grounds
Site Conditions: Soft

Road Name: Sheldon Street **Segment: South of San Fernando Road**

Average Daily Traffic: 19460 Vehicles Vehicle Speed: 35 MPH Vehicle Mix: 2 Roadway Classification: Secondary

	NOISE PARAMETERS AT 45 FEET FROM CENTERLINE (Equiv. Lane Dist: 38.07 ft)										**Centerline Distance to**		
	Noise Adjustments				**Unmitigated Noise Levels**						**Noise Contour (in feet)**		
Vehicle Type	REMEL	Traffic Adj.	Dist Adj.	Finite Adj	Leq Peak	Leq Day	Leq Eve.	Leq Night	Ldn	CNEL		Ldn	CNEL
Automobiles	65.11	1.65	1.67	-1.20	67.24	64.74	63.44	57.38	65.82	66.45	70 dBA:	**31**	**33**
Medium Trucks	74.83	-13.22	1.67	-1.20	62.08	42.74	34.96	44.17	50.32	50.36	65 dBA:	**67**	**71**
Heavy Trucks	80.05	-8.91	1.67	-1.20	71.61	58.08	46.71	55.91	62.53	62.56	60 dBA:	**144**	**154**
				Total:	**73.30**	**65.61**	**63.54**	**59.84**	**67.57**	**68.01**	55 dBA:	**310**	**332**

Road Name: San Fernando Road **Segment: West of Sheldon Street**

Average Daily Traffic: 16570 Vehicles Vehicle Speed: 35 MPH Vehicle Mix: 2 Roadway Classification: Major

	NOISE PARAMETERS AT 40 FEET FROM CENTERLINE (Equiv. Lane Dist: 26.46 ft)										**Centerline Distance to**		
	Noise Adjustments				**Unmitigated Noise Levels**						**Noise Contour (in feet)**		
Vehicle Type	REMEL	Traffic Adj.	Dist Adj.	Finite Adj	Leq Peak	Leq Day	Leq Eve.	Leq Night	Ldn	CNEL		Ldn	CNEL
Automobiles	65.11	0.96	4.04	-1.20	68.91	66.41	65.11	59.06	67.49	68.12	70 dBA:	**36**	**38**
Medium Trucks	74.83	-13.92	4.04	-1.20	63.76	44.41	36.63	45.84	51.99	52.03	65 dBA:	**77**	**82**
Heavy Trucks	80.05	-9.61	4.04	-1.20	73.28	59.75	48.38	57.59	64.20	64.23	60 dBA:	**165**	**177**
				Total:	**74.98**	**67.28**	**65.21**	**61.51**	**69.24**	**69.68**	55 dBA:	**356**	**381**

Road Name: San Fernando Road **Segment: West of Branford Street**

Average Daily Traffic: 16520 Vehicles Vehicle Speed: 35 MPH Vehicle Mix: 2 Roadway Classification: Major

	NOISE PARAMETERS AT 85 FEET FROM CENTERLINE (Equiv. Lane Dist: 79.53 ft)										**Centerline Distance to**		
	Noise Adjustments				**Unmitigated Noise Levels**						**Noise Contour (in feet)**		
Vehicle Type	REMEL	Traffic Adj.	Dist Adj.	Finite Adj	Leq Peak	Leq Day	Leq Eve.	Leq Night	Ldn	CNEL		Ldn	CNEL
Automobiles	65.11	0.94	-3.13	-1.20	61.73	59.23	57.93	51.87	60.31	60.94	70 dBA:	**25**	**27**
Medium Trucks	74.83	-13.93	-3.13	-1.20	56.57	37.23	29.45	38.66	44.81	44.84	65 dBA:	**54**	**58**
Heavy Trucks	80.05	-9.62	-3.13	-1.20	66.10	52.57	41.19	50.40	57.02	57.05	60 dBA:	**117**	**125**
				Total:	**67.79**	**60.10**	**58.02**	**54.33**	**62.06**	**62.50**	55 dBA:	**251**	**269**

APPENDIX D

RCNM Model Construction Noise Calculations

Roadway Construction Noise Model (RCNM),Version 1.1

Report date: 6/4/2015
Case Description: Pacoima Spreading Grounds Improvement Project

---- Receptor #1 ----

Description	Land Use	Baselines (dBA) Daytime	Evening	Night
Devonwood Park	Residential	54.4	54.4	54.4

Description	Impact Device	Usage(%)	Equipment Spec Lmax (dBA)	Actual Lmax (dBA)	Receptor Distance (feet)	Estimated Shielding (dBA)
Dozer	No	40		81.7	30	10
Dozer	No	40		81.7	80	10
Excavator	No	40		80.7	130	10
Excavator	No	40		80.7	180	0
Flat Bed Truck	No	40		74.3	230	0
Flat Bed Truck	No	40		74.3	280	0
Flat Bed Truck	No	40		74.3	330	0
Vacuum Street Sweeper	No	10		81.6	380	0
Dump Truck	No	40		76.5	430	0
Dump Truck	No	40		76.5	480	0
Dump Truck	No	40		76.5	530	0
Dump Truck	No	40		76.5	580	0
Mounted Impact Hammer (hoe ram)	Yes	20.0		90.3	630	0

Equipment	Calculated (dBA) *Lmax	Leq	Results Noise Limits (dBA) Day Lmax	Leq	Evening Lmax	Leq
Dozer	76.1	72.1	N/A	N/A	N/A	N/A
Dozer	67.6	63.6	N/A	N/A	N/A	N/A
Excavator	62.4	58.4	N/A	N/A	N/A	N/A
Excavator	69.6	65.6	N/A	N/A	N/A	N/A
Flat Bed Truck	61.0	57.0	N/A	N/A	N/A	N/A
Flat Bed Truck	59.3	55.3	N/A	N/A	N/A	N/A
Flat Bed Truck	57.9	53.9	N/A	N/A	N/A	N/A
Vacuum Street Sweeper	64.0	54.0	N/A	N/A	N/A	N/A
Dump Truck	57.8	53.8	N/A	N/A	N/A	N/A
Dump Truck	56.8	52.8	N/A	N/A	N/A	N/A
Dump Truck	55.9	52.0	N/A	N/A	N/A	N/A
Dump Truck	55.2	51.2	N/A	N/A	N/A	N/A
Mounted Impact Hammer (hoe ram)	68.3	61.3	N/A	N/A	N/A	N/A
Total	**76**	**74**	N/A	N/A	N/A	N/A

*Calculated Lmax is the Loudest value.

---- Receptor #2 ----

Description	Land Use	Baselines (dBA) Daytime	Evening	Night
Nearest Home to Basin 6	Residential	50	50	50

Description	Impact Device	Usage(%)	Equipment Spec Lmax (dBA)	Actual Lmax (dBA)	Receptor Distance (feet)	Estimated Shielding (dBA)
Dozer	No	40		81.7	35	0
Dozer	No	40		81.7	85	0
Excavator	No	40		80.7	135	0
Excavator	No	40		80.7	185	0
Flat Bed Truck	No	40		74.3	235	0
Flat Bed Truck	No	40		74.3	285	0
Flat Bed Truck	No	40		74.3	335	0
Vacuum Street Sweeper	No	10		81.6	385	0
Dump Truck	No	40		76.5	435	0
Dump Truck	No	40		76.5	485	0
Dump Truck	No	40		76.5	535	0
Dump Truck	No	40		76.5	585	0
Mounted Impact Hammer (hoe ram)	Yes	20		90.3	635	0

Equipment	Calculated (dBA) *Lmax	Leq	Results Noise Limits (dBA) Day Lmax	Leq	Evening Lmax	Leq
Dozer	84.8	80.8	N/A	N/A	N/A	N/A
Dozer	77.1	73.1	N/A	N/A	N/A	N/A
Excavator	72.1	68.1	N/A	N/A	N/A	N/A
Excavator	69.3	65.4	N/A	N/A	N/A	N/A
Flat Bed Truck	60.8	56.8	N/A	N/A	N/A	N/A
Flat Bed Truck	59.1	55.2	N/A	N/A	N/A	N/A
Flat Bed Truck	57.7	53.7	N/A	N/A	N/A	N/A
Vacuum Street Sweeper	63.9	53.9	N/A	N/A	N/A	N/A
Dump Truck	57.7	53.7	N/A	N/A	N/A	N/A
Dump Truck	56.7	52.7	N/A	N/A	N/A	N/A
Dump Truck	55.9	51.9	N/A	N/A	N/A	N/A
Dump Truck	55.1	51.1	N/A	N/A	N/A	N/A
Mounted Impact Hammer (hoe ram)	68.2	61.2	N/A	N/A	N/A	N/A
Total	**85**	**82**	N/A	N/A	N/A	N/A

*Calculated Lmax is the Loudest value.

---- Receptor #3 ----

Description	Land Use	Baselines (dBA) Daytime	Evening	Night
Nearest Home to Diversion	Residential	57	57	56.9

Description	Impact Device	Usage(%)	Equipment Spec Lmax (dBA)	Actual Lmax (dBA)	Receptor Distance (feet)	Estimated Shielding (dBA)
Dozer	No	40		81.7	90	0
Dozer	No	40		81.7	140	0
Excavator	No	40		80.7	40	0
Excavator	No	40		80.7	190	0
Flat Bed Truck	No	40		74.3	240	0
Flat Bed Truck	No	40		74.3	290	0
Flat Bed Truck	No	40		74.3	340	0
Vacuum Street Sweeper	No	10		81.6	390	0
Dump Truck	No	40		76.5	440	0
Dump Truck	No	40		76.5	490	0
Dump Truck	No	40		76.5	540	0
Dump Truck	No	40		76.5	590	0
Mounted Impact Hammer (hoe ram)	Yes	20		90.3	40	0

Equipment	Calculated (dBA) *Lmax	Leq	Results Noise Limits (dBA) Day Lmax	Leq	Evening Lmax	Leq
Dozer	76.6	72.6	N/A	N/A	N/A	N/A
Dozer	72.7	68.7	N/A	N/A	N/A	N/A
Excavator	82.6	78.7	N/A	N/A	N/A	N/A
Excavator	69.1	65.1	N/A	N/A	N/A	N/A
Flat Bed Truck	60.6	56.6	N/A	N/A	N/A	N/A
Flat Bed Truck	59.0	55.0	N/A	N/A	N/A	N/A
Flat Bed Truck	57.6	53.6	N/A	N/A	N/A	N/A
Vacuum Street Sweeper	63.7	53.7	N/A	N/A	N/A	N/A
Dump Truck	57.6	53.6	N/A	N/A	N/A	N/A
Dump Truck	56.6	52.6	N/A	N/A	N/A	N/A
Dump Truck	55.8	51.8	N/A	N/A	N/A	N/A
Dump Truck	55.0	51.0	N/A	N/A	N/A	N/A
Mounted Impact Hammer (hoe ram)	92.2	85.2	N/A	N/A	N/A	N/A
Total	**92**	**86**	N/A	N/A	N/A	N/A

*Calculated Lmax is the Loudest value.

APPENDIX F

TRAFFIC IMPACT STUDY

LINSCOTT
LAW &
GREENSPAN
engineers

TRAFFIC IMPACT STUDY

PACOIMA SPREADING GROUNDS

IMPROVEMENT PROJECT

County of Los Angeles, California
August 14, 2015

Prepared for:

BonTerra Psomas
225 South Lake Avenue, Suite 1000
Pasadena, California 91101

LLG Ref. 1-13-4056-2

REGISTERED PROFESSIONAL ENGINEER
ALFRED C. YING
NO. TR1944
EXP. 06/30/16
TRAFFIC
STATE OF CALIFORNIA

REGISTERED PROFESSIONAL ENGINEER
CLARE M. LOOK-JAEGER
TR1878
EXP. 06/30/17
TRAFFIC
STATE OF CALIFORNIA

Prepared by:

Alfred C. Ying, P.E., PTP
Senior Transportation Engineer

Under the Supervision of:

Clare M. Look-Jaeger, P.E.
Principal

Linscott, Law & Greenspan, Engineers

600 S. Lake Avenue
Suite 500
Pasadena, CA 91106

626.796.2322 T
626.792.0941 F
www.llgengineers.com

TABLE OF CONTENTS

SECTION PAGE

1.0 Introduction 1
1.1 Study Area 3

2.0 Project Description 4
2.1 Existing Project Site 4
2.2 Proposed Project Description 4

3.0 Site Access and Circulation 6
3.1 Existing Site Access 6
3.2 Proposed Project Site Access 6

4.0 Existing Street System 11
4.1 Study Intersections 11
4.2 Study Mainline Freeway Segments 12
4.3 Roadway Classifications 12
4.4 Regional Highway System 14
4.5 Roadway Descriptions 14

5.0 Traffic Counts 17

6.0 Traffic Forecasting Methodology 23
6.1 Project Trip Generation 23
6.2 Project Trip Distribution and Assignment 24

7.0 Future Development 31
7.1 Related Projects 31
7.2 Ambient Traffic Growth Factor 34

8.0 Traffic Impact Analysis Methodology 35
8.1 Intersection Analysis Methodology 35
8.2 Intersection Impact Criteria and Thresholds 35
8.3 Intersection Traffic Impact Analysis Scenarios 36

9.0 Traffic Analysis 37
9.1 Existing Conditions 37
9.1.1 Existing Conditions 37
9.1.2 Existing With Project Conditions 37
9.2 Year 2018 Conditions 37
9.2.1 Year 2018 Cumulative Without Project Conditions 37
9.2.2 Year 2018 Cumulative With Project Conditions 50

TABLE OF CONTENTS *(continued)*

SECTION PAGE

10.0 Transportation Improvement Measures 51

11.0 Supplemental Review of the Kewen Avenue/Paxton Street Intersection 52

12.0 Congestion Management Program Traffic Impact Assessment 54
12.1 Intersections 54
12.2 Freeways 54
12.3 Transit Impact Review 54

13.0 California Department of Transportation Impact Analysis 55
13.1 Freeway Mainline Segment Review 55
13.2 Ramp Vehicle Queuing Analysis 55

14.0 Conclusions 59

TABLE OF CONTENTS *(continued)*

LIST OF TABLES

SECTION—TABLE #		PAGE
5–1	Existing Traffic Volumes	18
6–1	Project Trip Generation	25
7–1	Related Projects List and Trip Generation	32
8–1	City of Los Angeles Intersection Impact Threshold Criteria	35
9–1	City of Los Angeles Level of Service Summary – Alternative Route 1	38
9–2	City of Los Angeles Level of Service Summary – Alternative Route 2	41
9–3	City of Los Angeles Level of Service Summary – Alternative Route 3	44
9–4	City of Los Angeles Level of Service Summary – Alternative Route 4	47
11–1	Supplemental Intersection Analysis	53
13–1	Caltrans Freeway Impact Assessment	56
13-2	Summary of Potential Vehicle Queuing	58

TABLE OF CONTENTS *(continued)*

LIST OF FIGURES

SECTION—FIGURE #		PAGE
1–1	Vicinity Map	2
3–1	Alternative Route 1 – Concurrent Use of All Three Disposal Sites	7
3–2	Alternative Route 2 – Use of Boulevard Pit Only	8
3–3	Alternative Route 3 – Use of Sheldon Pit Only	9
3–4	Alternative Route 4 – Use of Cal-Mat Pit Only	10
4–1	Existing Lane Configurations	13
5–1	Existing Traffic Volumes – Weekday AM Peak Hour	20
5–2	Existing Traffic Volumes – Weekday Mid-Day Peak Hour	21
5–3	Existing Traffic Volumes – Weekday PM Peak Hour	22
6–1	Project Traffic Volumes – Alternative Route 1 – Weekday AM, Mid-day and PM Peak Hours	27
6–2	Project Traffic Volumes – Alternative Route 2 – Weekday AM, Mid-day and PM Peak Hours	28
6–3	Project Traffic Volumes – Alternative Route 3 – Weekday AM, Mid-day and PM Peak Hours	29
6–4	Project Traffic Volumes – Alternative Route 4 – Weekday AM, Mid-day and PM Peak Hours	30
7–1	Location of Related Projects	33

TABLE OF CONTENTS *(continued)*

APPENDICES

APPENDIX

A. Traffic Count Data

- Vehicle Classification Manual Turning Movement Counts

B. CMA and Levels of Service Explanation

C. City of Los Angeles CMA Data Worksheets – Weekday AM/Mid-day/PM Peak Hours

C-1. Existing With Project Traffic Volume Figures

C-2. Year 2018 Cumulative Without Project Traffic Volume Figures

C-3. Year 2018 Cumulative With Project Traffic Volume Figures

D. HCM and Levels of Service Explanation

HCM Unsignalized Intersection Data Worksheets – Weekday AM/Mid-day/PM Peak Hours

E. Caltrans Ramp Queuing Worksheets

TRAFFIC IMPACT STUDY

PACOIMA SPREADING GROUNDS IMPROVEMENT PROJECT

County of Los Angeles, California
August 14, 2015

1.0 INTRODUCTION

This traffic analysis has been conducted to identify and evaluate the potential traffic impacts of the proposed Pacoima Spreading Grounds Improvement project. The proposed project site is located in the City of Los Angeles near the intersection of Paxton Street and Arleta Avenue on the west side of the Pacoima Diversion Channel. The project site is generally bounded by Filmore Street to the southeast, Woodman Avenue to the west, San Jose Street to the north, and Arleta Avenue to the northeast and is bisected by Devonshire Street. In addition, a portion of the project site is located north of Paxton Street and east of Arleta Avenue. The project site location and general vicinity are shown in ***Figure 1–1***.

As all of the study intersections are located within the City of Los Angeles, the traffic analysis follows City of Los Angeles traffic study guidelines[1] and is consistent with traffic impact assessment guidelines set forth in the Los Angeles County Congestion Management Program[2]. This traffic analysis evaluates potential project-related impacts at 24 study intersections in the vicinity of the project which are all under either City of Los Angeles jurisdiction only or City of Los Angeles/State of California joint jurisdiction. Three mainline I-5 Freeway segments are also analyzed using methodology employed by the State of California Department of Transportation (Caltrans). The study intersections were determined in consultation with Los Angeles County Department of Public Works (LACDPW) Traffic and Lighting Division staff and confirmed for analysis purposes with the City of Los Angeles Department of Transportation (LADOT). It should be noted that the governing board of the Los Angeles County Flood Control District (LACFCD) is the County Board of Supervisors and the County is the Lead Agency for purposes of adopting the environmental documentation as required under California Environmental Quality Act (CEQA). However, since all study intersections are located within the City of Los Angeles, the study intersections were appropriately analyzed using LADOT methodology and analysis criteria. In addition, a review was conducted of Los Angeles County Metropolitan Transportation Authority freeway and intersection monitoring stations to determine if a Congestion Management Program transportation impact assessment analysis is required for the proposed project.

This study (i) presents existing traffic volumes, (ii) forecasts existing-plus-project traffic volumes, (iii) determines project-related impacts, (iv) forecasts future traffic volumes without the project, (v) forecasts future traffic volumes with the proposed project, (vi) determines project-related impacts, and (vii) recommends mitigation measures, as necessary.

---

[1] *Traffic Study Policies and Procedures*, City of Los Angeles Department of Transportation, August 2014.
[2] *2010 Congestion Management Program*, Los Angeles County Metropolitan Transportation Authority, October 2010.

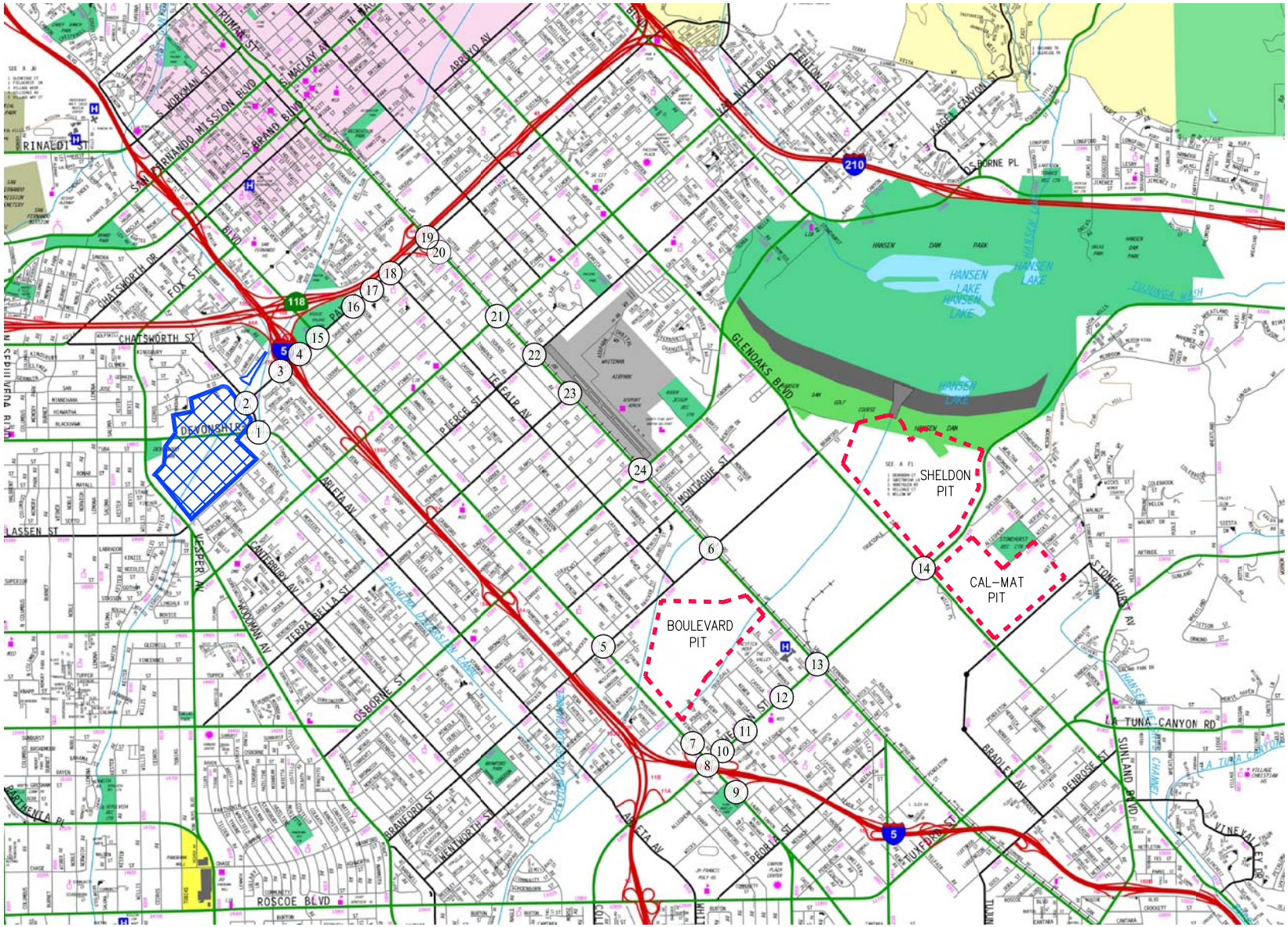

N

NOT TO SCALE

MAP SOURCE: RAND MCNALLY & COMPANY

EXISTING PACOIMA SPREADING GROUNDS

(XX) STUDY INTERSECTION

FIGURE 1-1
VICINITY MAP

LINSCOTT, LAW & GREENSPAN, engineers

PACOIMA SPREADING GROUNDS IMPROVEMENT PROJECT

o:\job_file\4056-2\dwg\f1-1.dwg LDP 12:28:35 07/02/2015 rodriquez

1.1 Study Area

Based on consultation with LACFCD staff, LACDPW Traffic & Lighting Division staff, and City of Los Angeles Department of Transportation staff, a total of 24 study intersections and three mainline I-5 Freeway segments have been identified for evaluation. These study locations provide local access to the study area and define the extent of the boundaries for this traffic impact investigation. Further discussion of the existing street system and study area is provided in Section 4.0 herein.

The general location of the project in relation to the study locations and surrounding street system is presented in *Figure 1–1*. The traffic analysis study area is generally comprised of those locations which have the greatest potential to experience significant traffic impacts due to the proposed project. In the traffic engineering practice, the study area generally includes those locations that are:

a. Immediately adjacent or in close proximity to the project site and the disposal sites (i.e., based on the anticipated haul routes);

b. In the vicinity of the project site that are documented to have current or projected future adverse operational issues; and

c. In the vicinity of the project site that are forecast to experience a relatively greater percentage of project-related vehicular turning movements (e.g., at freeway ramp intersections).

The locations selected for analysis were based on the above criteria, the forecast Pacoima Spreading Grounds project (i.e., employee-related and truck-related) vehicle peak hour trip generation to and from the spreading grounds and the disposal site/s, the CMP criteria of 50 or more potential project-related vehicle trips generated during either the weekday AM or PM peak hour of adjacent street traffic, the anticipated distribution of project vehicular trips, and existing intersection and corridor operations.

The Volume-to-Capacity ratio and Level of Service calculations for the study intersections were used to evaluate the potential traffic-related impacts associated with area growth, cumulative projects and the proposed project. It should be noted that additional locations in the project vicinity were not selected for analysis because they do not satisfy the aforementioned criteria, and as such, they are not anticipated to experience significant impacts due to project generated traffic volumes.

2.0 PROJECT DESCRIPTION

2.1 Existing Project Site

The Pacoima Spreading Grounds cover approximately 169 acres in area and include several facilities, including a radial intake gate, intake canal, 12 spreading basins with a total storage capacity of 530-acre feet, maintenance roads, spillways and the overflow weir. The proposed project site is located in the City of Los Angeles near the intersection of Paxton Street and Arleta Avenue on the west side of the Pacoima Diversion Channel. The project site is generally bounded by Filmore Street to the southeast, Woodman Avenue to the west, San Jose Street to the north, and Arleta Avenue to the northeast and is bisected by Devonshire Street. In addition, a portion of the project site is located north of Paxton Street and east of Arleta Avenue.

The Pacoima Spreading Grounds, built in the 1930's, is one of the major water conservation facilities that provides groundwater recharge for the San Fernando Valley. The spreading grounds' percolation rate is currently reduced due to a low permeability clay layer underlying the infiltration basins. Currently, water is diverted from the Pacoima Diversion Channel using the radial gate located at the northeast end of the proposed project site. The water then flows through the intake canal, passing through pipes under Arleta Avenue to the spreading basins, where the water percolates to the groundwater basin. During high stormwater flows, the radial gate is lifted out of the channel slightly to allow excess flows to undershoot the gate and travel down the Pacoima Diversion Channel. Although the end of the spreading basins has an overflow structure, the spreading grounds are not intended to be used to run excess flows through the spreading grounds. Flow will travel over the overflow weir only as emergency protection.

2.2 Proposed Project Description

The principle objective of the proposed project is to increase groundwater recharge of the San Fernando Groundwater Basin by increasing the facility's storage capacity and restoring its percolation rate through excavation and reconfiguration of the spreading basins. These actions are aimed to enhance the capabilities of the Pacoima Spreading Grounds as a water conservation facility for the County and City of Los Angeles. The improvements proposed will increase the spreading grounds' capacity and percolation rate and simplify operations by combining basins and constructing new interbasin structures. With completion of the project, the groundwater recharge in the San Fernando Groundwater Basin will be increased. The percolation rate is expected to increase from 65 cubic feet per second (cfs) to 142 cfs through removal of the existing clay layers underlying the spreading basins. The capacity of the spreading basins is expected to increase from 530 acre-feet to 1,197 acre-feet by combining and deepening the existing 12 spreading basins into six spreading basins.

Approximately 1.6 million cubic yards (cy) of sediment will be excavated in order to completely remove the underlying clay layers; however, only 1.37 million cy of sediment will be exported from the site. The remainder of suitable sediment will be used to backfill the existing intake channel or be returned to the spreading basins to bring the basin inverts up to their finished elevation.

The proposed project includes the transportation and placement of excavated material at facilities prepared and designated to accept such material. A total of three sediment disposal sites have been identified for consideration, either individually or in combination: Boulevard Pit, Sheldon Pit, and the Cal-Mat Pit. All three sites are located in the Sun Valley area of Los Angeles, approximately 5.7 miles southeast of the Pacoima Spreading Grounds.

Two haul routes from the Pacoima Spreading Grounds site to the sediment disposal site/s have been identified. One haul route (i.e., Haul Route A) reflects trucks traveling northeast on Paxton Street to access the I-5 Southbound Freeway, exiting the freeway at Sheldon Street and then either heading northeast along Sheldon Street after turning (right) onto Laurel Canyon Boulevard to access either the Sheldon Pit or the Cal-Mat Pit, or heading north on Laurel Canyon Boulevard to turn east (right) on Branford Street to access the Boulevard Pit. The other haul route (i.e., Haul Route B) reflects trucks traveling northeast on Paxton Street to access San Fernando Road, then traveling south on San Fernando Road to either turn northeast (left) on Sheldon Street to access the Sheldon Pit or the Cal-Mat Pit, or turn southwest (right) on Sheldon Street and then head north (right) on Laurel Canyon Boulevard to turn east (right) on Branford Street to access the Boulevard Pit. The hauling operation associated with the project is anticipated to last 18 months.

So as to identify all potential temporary traffic impacts associated with the use of these disposal sites as part of the environmental documentation, a total of four (4) alternative analyses have been prepared and are summarized below:

- Alternative 1: Concurrent Use of All Three Sediment Disposal Sites (Boulevard Pit, Sheldon Pit, and the Cal-Mat Pit)
- Alternative 2: Use of Boulevard Pit Only
- Alternative 3: Use of Sheldon Pit Only
- Alternative 4: Use of Cal-Mat Pit Only

Any combination of the use of only two of the three disposal sites (e.g., concurrent use of only the Boulevard and Sheldon Pits) would have the same or less potential temporary traffic impacts than those identified under either Alternative 2 or Alternative 3. Therefore, since all combinations of two of the three disposal sites would have the same or less traffic impacts than those identified under Alternative 4 (i.e., the only Alternative with a significant temporary traffic impact), all potential traffic impacts have been covered for environmental review purposes.

3.0 SITE ACCESS AND CIRCULATION

The proposed site access scheme and haul routes for the project is displayed in ***Figures 3-1***, ***3-2, 3-3*** and ***3-4*** for Alternatives 1, 2, 3, and 4, respectively. Descriptions of the existing and proposed site access and circulation schemes are provided in the following subsections.

3.1 Existing Site Access

Main vehicular access to and from the Pacoima Spreading Grounds site is provided via Devonshire Street. All trucks will therefore utilize the Devonshire Street access point to traverse to and from Paxton Street and the I-5 Freeway and/or San Fernando Road in order to deliver sediment material to each of the disposal sites.

3.2 Proposed Project Site Access

Vehicular access to the following three disposal sites is as follows:

- Boulevard Pit – Access to the Boulevard Pit, which is operated by Vulcan materials, will be provided via the entry/exit driveway on Branford Street. This access point is located on Branford Street between Laurel Canyon Boulevard and San Fernando Road. Full access is provided, however, the proposed truck haul route reflects right-turn (eastbound) entry and right-turn (northbound) exit traffic movements only. Therefore, left-turning truck traffic is not anticipated to occur at the Boulevard Pit access driveway.

- Sheldon Pit – Access to the Sheldon Pit, which is also operated by Vulcan materials, is assumed to be provided via the entry/exit driveway on Wentworth Street. This access point is located east of Glenoaks Boulevard. Full access is provided, however, the proposed truck haul route reflects left-turn (eastbound) entry and right-turn (southbound) exit traffic movements only.

- Cal-Mat Pit – Access to the Cal-Mat Pit, which is also operated by Vulcan materials, will be provided via the entry driveway on Wentworth Street. This access point is located east of Glenoaks Boulevard. Full access is provided, however, the proposed truck haul route reflects right-turn (eastbound) entry. For exiting, trucks will utilize the Glenoaks Boulevard driveway via a right-turn only (westbound) traffic movement. Therefore, left-turning traffic movements (either entering or exiting) are not anticipated to occur at the Cal-Mat Pit access driveways.

Figure 3-1 illustrates the envisioned haul routes if all three sediment disposal sites are used concurrently. *Figure 3-2* illustrates the envisioned haul routes if only the Boulevard Pit sediment disposal site is used. *Figure 3-3* illustrates the envisioned haul routes if only the Sheldon Pit disposal site is used and *Figure 3-4* illustrates the envisioned haul routes if only the Cal-Mat Pit disposal site is used.

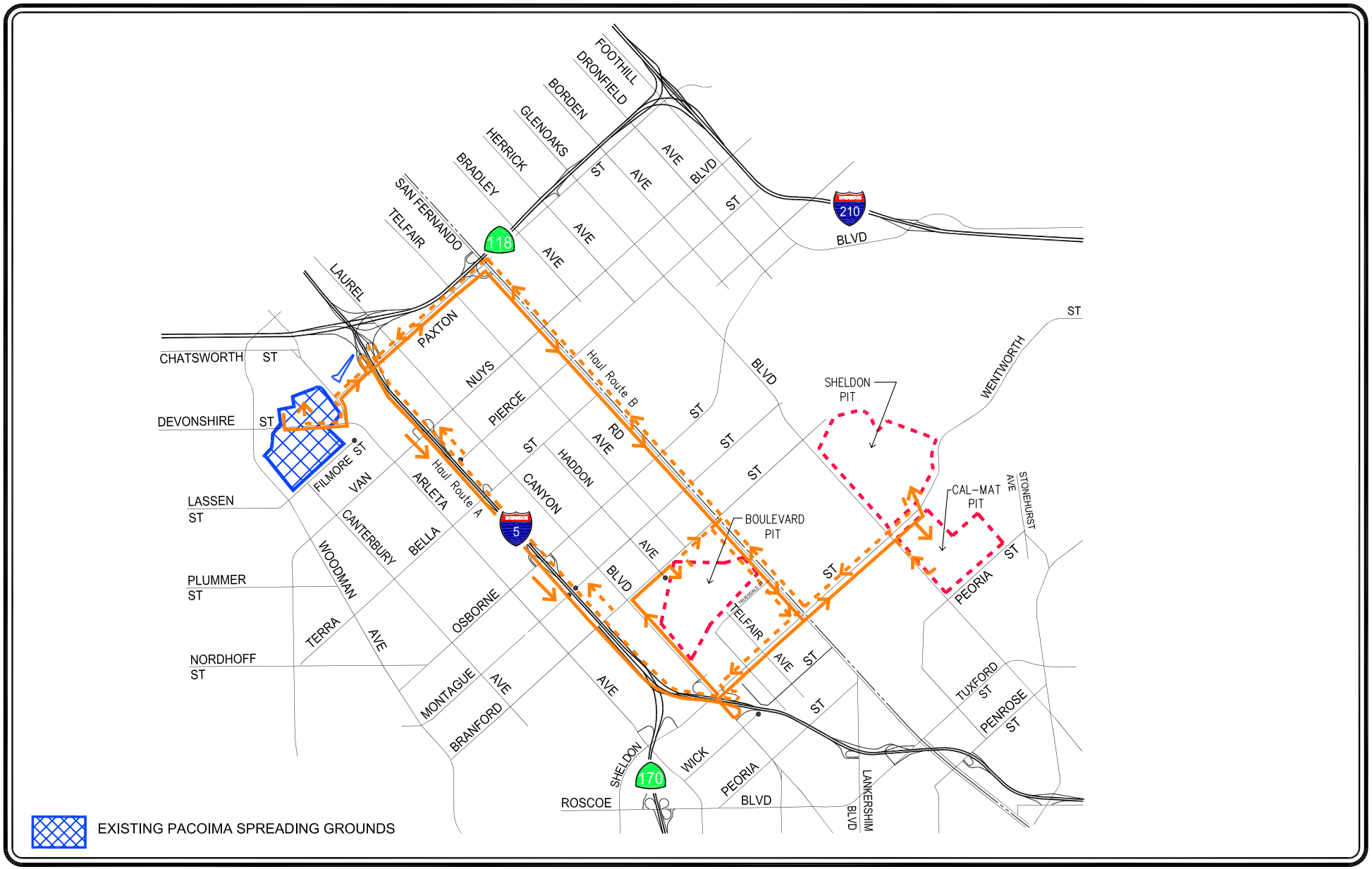

N

NOT TO SCALE

ENTERING DISPOSAL SITE

EXITING DISPOSAL SITE

FIGURE 3-1
ALTERNATIVE ROUTE 1
CONCURRENT USE OF ALL THREE DISPOSAL SITES

LINSCOTT, LAW & GREENSPAN, engineers

PACOIMA SPREADING GROUNDS IMPROVEMENT PROJECT

o:\job_file\4056-2\dwg\f3-1.dwg LDP 11:54:09 07/02/2015 rodriquez

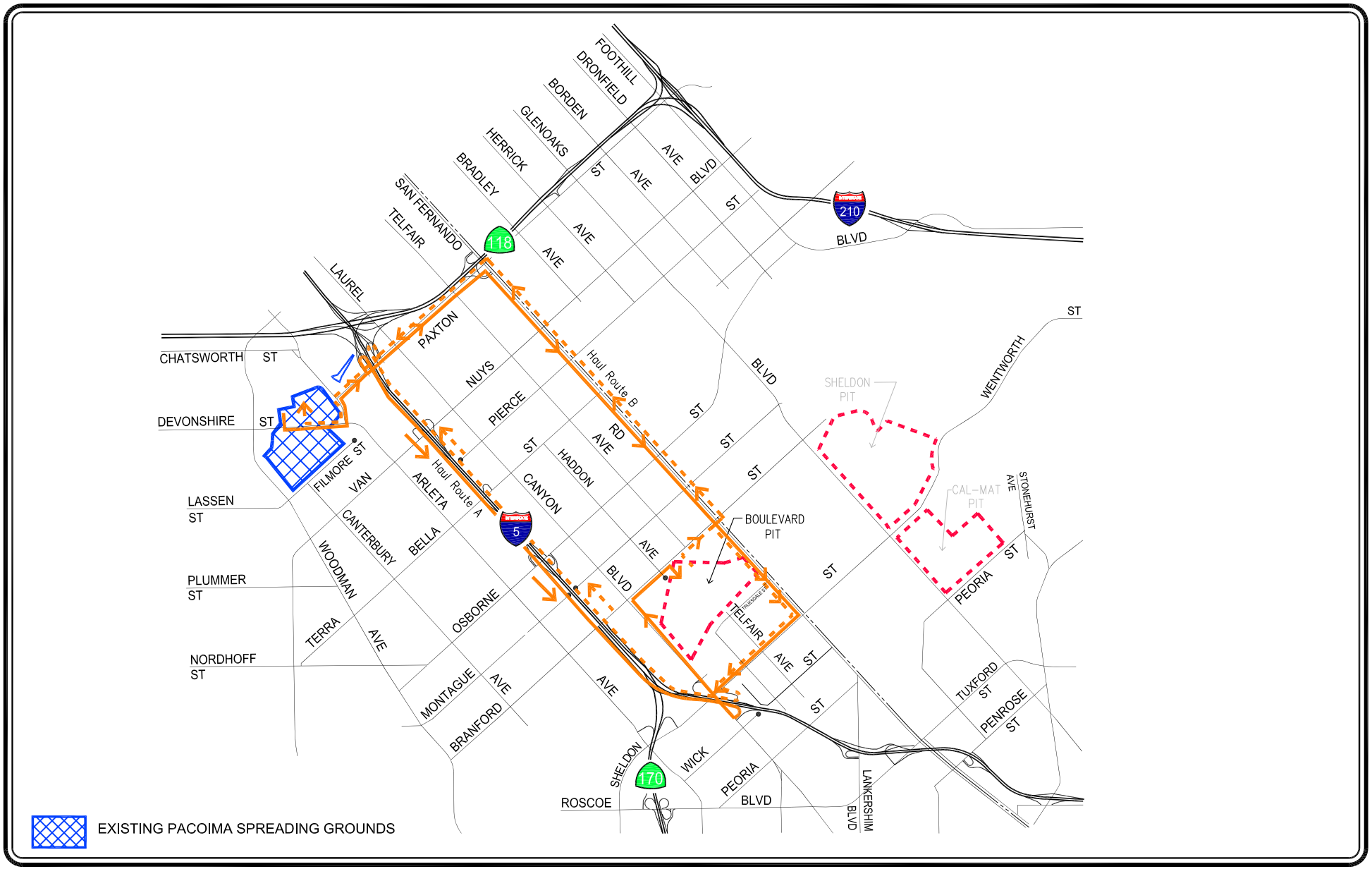

N

NOT TO SCALE

ENTERING DISPOSAL SITE

EXITING DISPOSAL SITE

FIGURE 3-2
ALTERNATIVE ROUTE 2
USE OF BOULEVARD PIT ONLY

PACOIMA SPREADING GROUNDS IMPROVEMENT PROJECT

LINSCOTT, LAW & GREENSPAN, engineers

o:\job_file\4056-2\dwg\f3-2.dwg LDP 12:02:31 07/02/2015 rodriquez

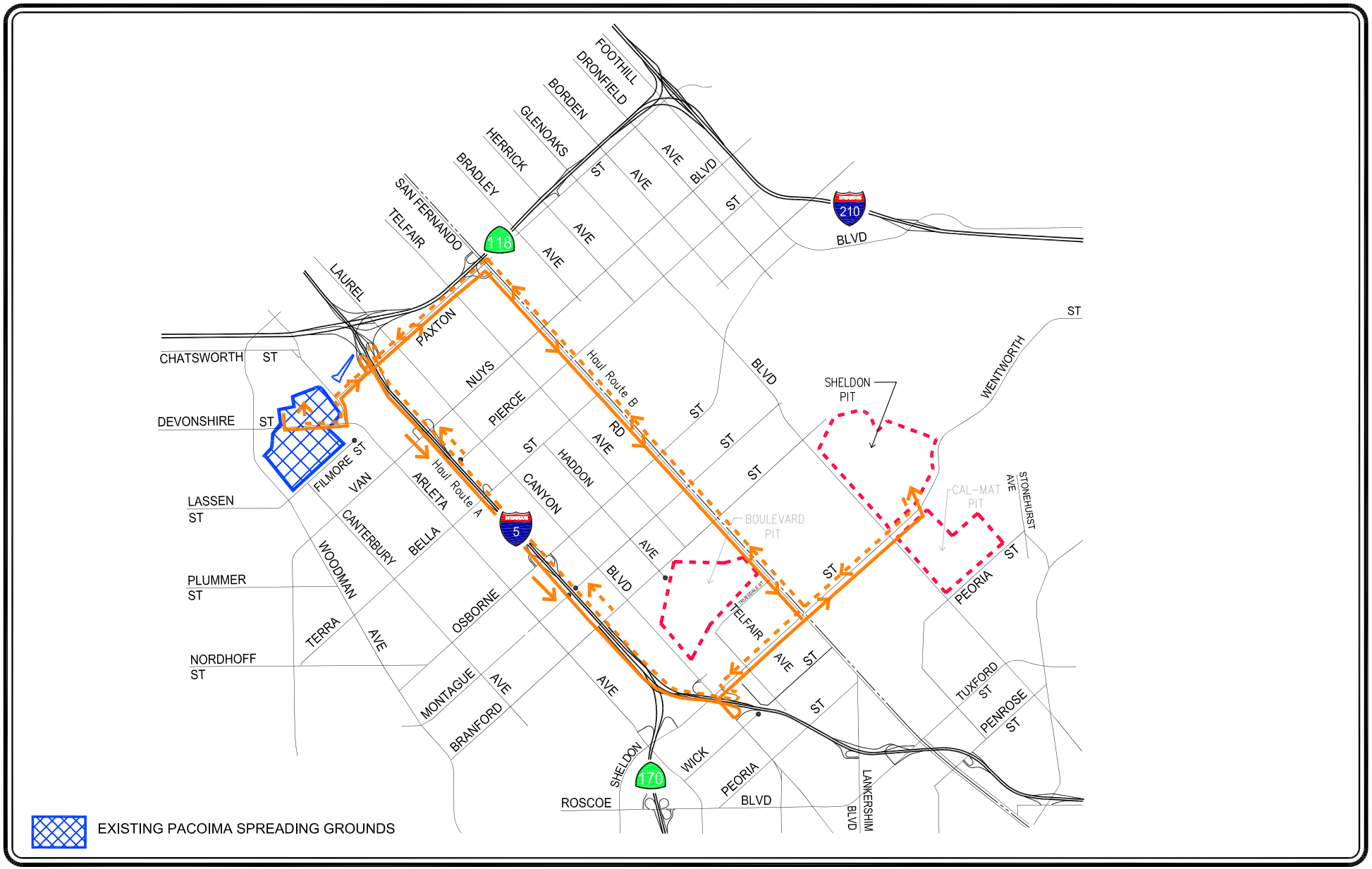

N

NOT TO SCALE

ENTERING DISPOSAL SITE

EXITING DISPOSAL SITE

FIGURE 3-3
ALTERNATIVE ROUTE 3
USE OF SHELDON PIT ONLY

PACOIMA SPREADING GROUNDS IMPROVEMENT PROJECT

LINSCOTT, LAW & GREENSPAN, engineers

o:\job_file\4056-2\dwg\f3-3.dwg LDP 12:03:16 07/02/2015 rodriquez

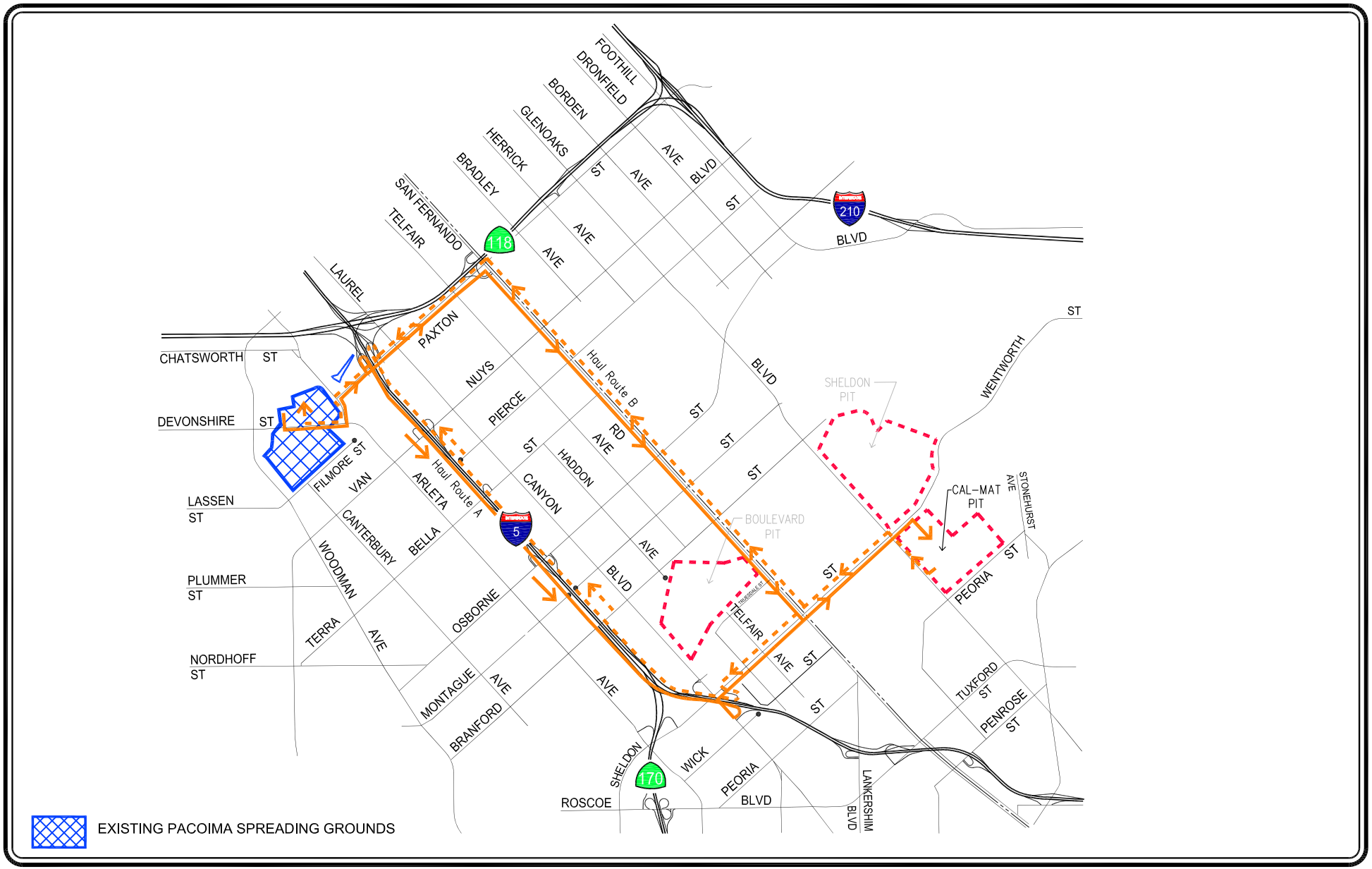

N

NOT TO SCALE

ENTERING DISPOSAL SITE

EXITING DISPOSAL SITE

FIGURE 3-4
ALTERNATIVE ROUTE 4
USE OF CAL-MAT PIT ONLY

LINSCOTT, LAW & GREENSPAN, engineers

PACOIMA SPREADING GROUNDS IMPROVEMENT PROJECT

o:\job_file\4056\dwg\f3-4.dwg LDP 12:27:13 05/27/2014 rodriquez

4.0 EXISTING STREET SYSTEM

4.1 Study Intersections

The existing Pacoima Spreading Grounds facility site is located in the City of Los Angeles near the intersection of Paxton Street and Arleta Avenue on the west side of the Pacoima Diversion Channel. The site is generally bounded by Filmore Street to the southeast, Woodman Avenue to the west, San Jose Street to the north, and Arleta Avenue to the northeast and is bisected by Devonshire Street. In addition, a portion of the project site is located north of Paxton Street and east of Arleta Avenue.

The following 24 study intersections were selected for analysis in consultation with Los Angeles County Department of Public Works (LACDPW) and City of Los Angeles Department of Transportation (LADOT) staff in order to determine potential temporary traffic impacts related to the proposed project.

1. Arleta Avenue/Devonshire Street (City of Los Angeles)
2. Arleta Avenue/Paxton Street (City of Los Angeles)
3. I-5 Freeway SB Ramps-Sharp Avenue/Paxton Street (City of Los Angeles/Caltrans)
4. I-5 Freeway NB Ramps-Remick Avenue/Paxton Street (City of Los Angeles/ Caltrans)
5. Laurel Canyon Boulevard/Branford Street (City of Los Angeles)
6. San Fernando Road/Branford Street (City of Los Angeles)
7. Laurel Canyon Boulevard/I-5 Freeway NB Off-Ramp-Jerome Street (City of Los Angeles/Caltrans)
8. Laurel Canyon Boulevard/Sheldon Street (City of Los Angeles)
9. Laurel Canyon Boulevard/I-5 Freeway SB Ramps (City of Los Angeles/Caltrans)
10. I-5 Freeway NB On-Ramp-Rincon Avenue/Sheldon Street (City of Los Angeles/ Caltrans)
11. Haddon Avenue/Sheldon Street (City of Los Angeles)
12. Telfair Avenue/Sheldon Street (City of Los Angeles)
13. San Fernando Road/Sheldon Street (City of Los Angeles)
14. Glenoaks Boulevard/Sheldon Street (City of Los Angeles)
15. Laurel Canyon Boulevard/Paxton Street (City of Los Angeles)
16. Haddon Avenue/Paxton Street (City of Los Angeles)
17. Kewen Avenue/Paxton Street (City of Los Angeles)
18. Telfair Avenue/Paxton Street (City of Los Angeles)
19. San Fernando Road/Paxton Street (City of Los Angeles)

20. San Fernando Road/SR-118 Freeway EB Ramps (City of Los Angeles/Caltrans)
21. San Fernando Road/Van Nuys Boulevard (City of Los Angeles)
22. San Fernando Road/Pierce Street (City of Los Angeles)
23. San Fernando Road/Terra Bella Street (City of Los Angeles)
24. San Fernando Road/Osborne Street (City of Los Angeles)

Sixteen of the 24 study intersections are presently controlled by traffic signals, while the five intersections with the I-5 Freeway at Paxton Street (northbound and southbound ramps), Laurel Canyon Boulevard (northbound off-ramp and southbound ramps) and Sheldon Street (northbound on-ramp) are currently controlled by stop signs facing the northbound and southbound off-ramp approaches. Additionally, the Haddon Avenue/Paxton Street and Kewen Avenue/Paxton Street intersections are currently controlled by stop signs facing the respective Haddon Avenue and Kewen Avenue approaches while the Arleta Avenue/Paxton Street intersection is currently controlled by all-way stop signs. The existing lane configurations and regulatory controls at the 24 study intersections are displayed in ***Figure 4–1***.

4.2 Study Mainline Freeway Segments

The following three study mainline freeway segment locations under Caltrans jurisdiction were identified for analysis in order to determine potential temporary traffic impacts due to the 18-month hauling operation associated with the project:

1. I-5 Freeway south of Paxton Street
2. I-5 Freeway north of Osborne Street
3. I-5 Freeway south of SR-170

4.3 Roadway Classifications

Both the County and City of Los Angeles utilize the roadway categories recognized by regional, state and federal transportation agencies. There are four categories in the roadway hierarchy, ranging from freeways with the highest capacity to two-lane undivided roadways with the lowest capacity. The roadway categories are summarized as follows:

- *Freeways* are limited-access and high-speed travel ways included in the state and federal highway systems. Their purpose is to carry regional through-traffic. Access is provided by interchanges with typical spacing of one mile or greater. No local access is provided to adjacent land uses.

- *Arterial* roadways are major streets that primarily serve through-traffic and provide access to abutting properties as a secondary function. Arterials are generally designed with two to six travel lanes and their major intersections are signalized. This roadway type is divided into two categories: major and secondary arterials. Major arterials are typically four-or-more lane roadways and serve both local and regional through-traffic. Secondary arterials are typically two-to-four lane streets that service local and commuter traffic.

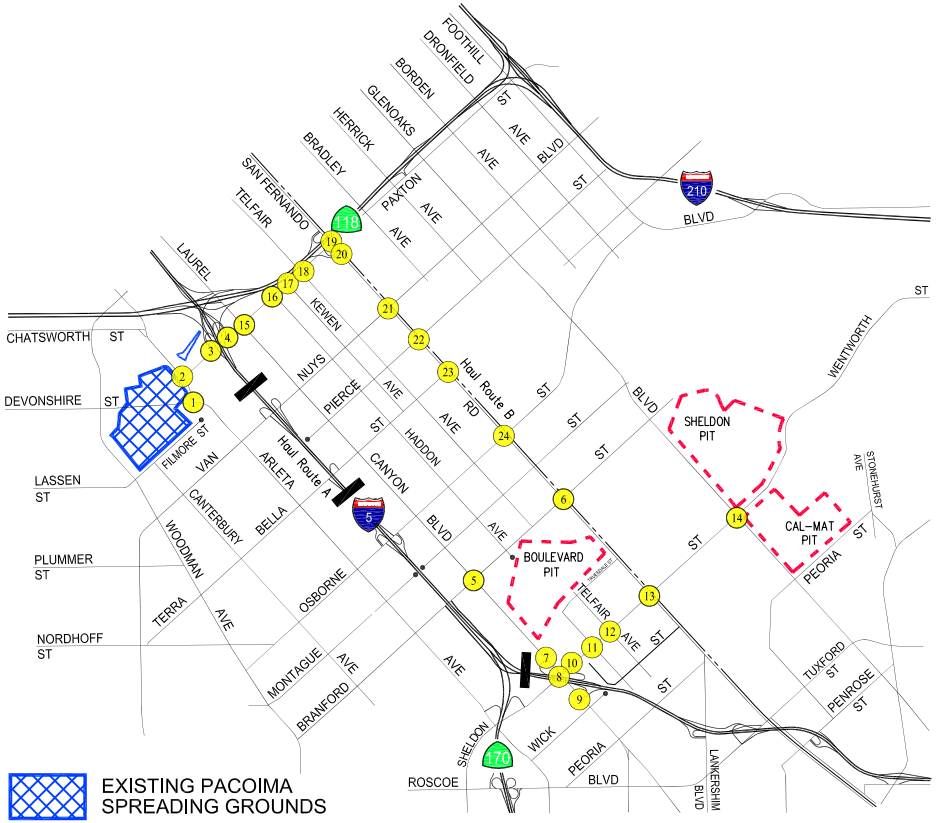

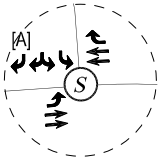

No. 1
Arleta Ave/
Devonshire St

No. 2
Arleta Ave/
Paxton St

No. 3
I-5 Fwy SB
Ramps-Sharp Ave/
Paxton St

No. 4
I-5 Fwy NB
Ramps-Remick Ave/
Paxton St

No. 5
Laurel Canyon Blvd/
Branford St

No. 6
San Fernando Rd/
Branford St

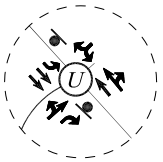

No. 7
Laurel Canyon
Blvd/I-5 Fwy NB
Off-Ramp-Jerome St

No. 8
Laurel Canyon Blvd/
Sheldon St

No. 9
Laurel Canyon Blvd/
I-5 Fwy SB Ramps

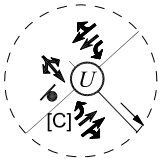

No. 10
I-5 Fwy NB
On-Ramp-Rincon Ave/
Sheldon St

No. 11
Haddon Ave/
Sheldon St

No. 12
Telfair Ave/
Sheldon St

No. 13
San Fernando Rd/
Sheldon St

No. 14
Glenoaks Blvd/
Sheldon St

No. 15
Laurel Canyon Blvd/
Paxton St

No. 16
Haddon Ave/
Paxton St

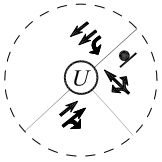

No. 17
Kewen Ave/
Paxton St

No. 18
Telfair Ave/
Paxton St

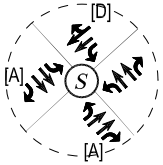

No. 19
San Fernando Rd/
Paxton St

No. 20
San Fernando Rd/
SR-118 Fwy EB
Ramps

No. 21
San Fernando Rd/
Van Nuys Blvd

No. 22
San Fernando Rd/
Pierce St

No. 23
San Fernando Rd/
Terra Bella St

No. 24
San Fernando Rd/
Osborne St

N

NOT TO SCALE

S SIGNALIZED INTERSECTION

U UNSIGNALIZED INTERSECTION

FREEWAY SEGMENT

STOP SIGN

[A] OVERLAP PHASE

[B] FUNCTIONAL RIGHT-TURN ONLY LANE

[C] TWO-WAY LEFT-TURN STRIPING

[D] NO RIGHT-TURN ON RED

LINSCOTT, LAW & GREENSPAN, engineers

FIGURE 4-1
EXISTING LANE CONFIGURATIONS

PACOIMA SPREADING GROUNDS IMPROVEMENT PROJECT

o:\job_file\4056-2\dwg\f4-1.dwg LDP 14:35:21 07/06/2015 rodriguez

- *Collector* roadways are streets that provide access and traffic circulation within residential and non-residential (e.g., commercial and industrial) areas. Collector roadways connect local streets to arterials and are typically designed with two through travel lanes (i.e., one through travel lane in each direction) that may accommodate on-street parking. They may also provide access to abutting properties.

- *Local* roadways distribute traffic within a neighborhood, or similar adjacent neighborhoods, and are not intended for use as a through-street or a link between higher capacity facilities such as collector or arterial roadways. Local streets are fronted by residential uses and do not typically serve commercial uses.

4.4 Regional Highway System

Primary regional access is provided by the I-5 (Golden State) Freeway. A brief description of this freeway is provided in the following paragraph.

I-5 (Golden State) Freeway is a north-south oriented freeway that extends between northern and southern California. The number of mainline travel lanes varies in the study area. South of Paxton Street, seven northbound and six southbound mainline travel lanes are provided. North of Osborne Street, six northbound and southbound mainline travel lanes are provided. South of SR-170, four northbound and southbound mainline travel lanes are provided. In addition, northbound and southbound carpool lanes are currently near completion in the project vicinity. The northbound and southbound I-5 Freeway On and Off-ramps expected to be utilized by project-generated trucks are located at Paxton Street. In addition, the I-5 Freeway SB Off-ramp at Laurel Canyon Boulevard and the I-5 Freeway NB On-Ramp at Sheldon Street are also expected to be utilized.

4.5 Roadway Descriptions

A brief description of the important roadways in the project site vicinity is provided in the following paragraphs.

Devonshire Street is an east-west oriented roadway which bisects the existing Pacoima Spreading Grounds facility. Devonshire Street is designated as a Major Highway Class II in the City of Los Angeles General Plan Transportation Element. Two through travel lanes are provided in each direction and a two-way left turn lane is also provided in the project vicinity. No Stopping Anytime signs are posted along both the north and south sides of Devonshire Street near the Pacoima Spreading Grounds facility. At the traffic signal with Arleta Avenue, an exclusive eastbound left-turn only lane and an exclusive westbound right-turn only lane is provided on Devonshire Street. Devonshire Street is posted for a 40 miles per hour (MPH) speed limit in the project vicinity. In addition, according to the City's Mobility Plan 2035, Devonshire Street is designated as Avenue II and Avenue I, east and west of Woodman Avenue, respectively, per the *Citywide General Plan Circulation System Map A2* (Valley Subarea).

Paxton Street is a generally east-west roadway which will be partially utilized as part of the access haul route, regardless of which disposal site is used. Paxton Street is designated as a Secondary Highway in the City of Los Angeles General Plan Transportation Element. Two through travel lanes are provided in each direction in the project vicinity. Paxton Street also provides access to and from the I-5 Freeway Northbound and Southbound Ramps. Paxton Street is posted for a 40 MPH speed limit in the project vicinity. In addition, according to the City's Mobility Plan 2035, Paxton Street is designated as an Avenue II per the *Citywide General Plan Circulation System Map A2* (Valley Subarea).

Van Nuys Boulevard is a generally east-west oriented roadway, designated as a Major Highway Class II, west of Foothill Boulevard in the City of Los Angeles General Plan Transportation Element, and as a Secondary Highway east of Foothill Boulevard. Two through travel lanes are provided in each direction in the project vicinity. Van Nuys Boulevard is posted for a 35 MPH speed limit in the project vicinity. In addition, according to the City's Mobility Plan 2035, Van Nuys Boulevard is designated as Avenue II and Boulevard II, east and west of Foothill Boulevard, respectively, per the *Citywide General Plan Circulation System Map A2* (Valley Subarea).

Terra Bella Street is a generally east-west roadway, designated as a Secondary Highway in the City of Los Angeles General Plan Transportation Element. One through travel lane is provided in each direction and a two-way left turn lane is also provided in the project vicinity. Terra Bella Street is posted for a 35 MPH speed limit in the project vicinity. In addition, according to the City's Mobility Plan 2035, Terra Bella Street is designated as an Avenue II per the *Citywide General Plan Circulation System Map A2* (Valley Subarea).

Osborne Street is a generally east-west oriented roadway, designated as a Major Highway Class II in the City of Los Angeles General Plan Transportation Element. Two through travel lanes are provided in each direction in the project vicinity. Osborne Street is posted for a 35 MPH speed limit west of San Fernando Road and 40 MPH east of San Fernando Road in the project vicinity. In addition, according to the City's Mobility Plan 2035, Osborne Street is designated as an Avenue I per the *Citywide General Plan Circulation System Map A2* (Valley Subarea).

Branford Street is generally an east-west oriented roadway located adjacent to and along the north side of the existing Boulevard Pit. Branford Street is designated as a Secondary Highway in the City of Los Angeles General Plan Transportation Element. Two through travel lanes are provided in each direction in the project vicinity. Branford Street is posted for a 35 MPH speed limit in the project vicinity. In addition, according to the City's Mobility Plan 2035, Branford Street is designated as an Avenue II per the *Citywide General Plan Circulation System Map A2* (Valley Subarea).

Sheldon Street is a generally east-west oriented roadway which will be utilized to directly access both the Sheldon and Cal-Mat Pits. Sheldon Street is designated as a Secondary Highway in the City of Los Angeles General Plan Transportation Element. Two through travel lanes are provided in each direction in the project vicinity. Sheldon Street is posted for a 40 MPH speed limit west of Glenoaks Boulevard and 45 MPH east of Glenoaks Boulevard in the project

vicinity. In addition, according to the City's Mobility Plan 2035, Sheldon Street is designated as an Avenue II per the *Citywide General Plan Circulation System Map A2* (Valley Subarea).

Laurel Canyon Boulevard is a generally north-south oriented roadway which will be partially utilized as part of the access haul route, regardless of which disposal site is used. Laurel Canyon Boulevard is designated as a Major Highway Class II in the City of Los Angeles General Plan Transportation Element. Two through travel lanes are provided in each direction in the project vicinity. Laurel Canyon Boulevard is posted for a 35 MPH speed limit in the project vicinity. In addition, according to the City's Mobility Plan 2035, Laurel Canyon Boulevard is designated as an Avenue I per the *Citywide General Plan Circulation System Map A2* (Valley Subarea).

San Fernando Road is a generally north-south oriented roadway which will be partially utilized as part of the access haul route, regardless of which disposal site is used. San Fernando Road is designated as a Major Highway Class II in the City of Los Angeles General Plan Transportation Element. Two through travel lanes are provided in each direction in the project vicinity. San Fernando Road is posted for a 35 MPH speed limit in the project vicinity. In addition, according to the City's Mobility Plan 2035, San Fernando Road is designated as an Avenue I per the *Citywide General Plan Circulation System Map A2* (Valley Subarea).

Glenoaks Boulevard is a generally north-south oriented roadway and is designated as a Major Highway Class II in the City of Los Angeles General Plan Transportation Element. Two through travel lanes are provided in each direction in the project vicinity. Glenoaks Boulevard is posted for a 45 MPH speed limit east of Osborne Street and 40 MPH speed limit west of Osborne Street. Additionally, a Class II bicycle route is striped along both sides of Glenoaks Boulevard in the project vicinity. In addition, according to the City's Mobility Plan 2035, Glenoaks Boulevard is designated as a Boulevard II per the *Citywide General Plan Circulation System Map A2* (Valley Subarea).

5.0 TRAFFIC COUNTS

Manual vehicle classification counts of turning movements were conducted at each of the 24 study intersections during the weekday morning (AM), mid-day, and afternoon (PM) commuter periods to determine the peak hour traffic volumes. The manual traffic counts were conducted by an independent traffic count subconsultant (i.e., City Traffic Counters) at 14 study intersections in January 2014 and ten additional study intersections in March 2015. The manual vehicle classification counts at the study intersections were conducted from 7:00 to 10:00 AM to determine the weekday AM peak commuter hour, from 12:00 PM to 2:00 PM to determine the weekday mid-day peak hour, and from 3:00 to 6:00 PM to determine the weekday PM peak commuter hour. The manual traffic counts were conducted when local schools were in session. Traffic volumes at the study intersections show the morning and afternoon peak periods typically associated with peak commute hours in metropolitan areas such as Los Angeles. It should be noted that the traffic counts conducted in 2014 have been increased by 1.5% to reflect the year 2015 existing conditions.

The weekday AM, mid-day, and PM peak hour manual counts of vehicle movements at the 24 study intersections are summarized in ***Table 5-1***. The existing traffic volumes at the study intersections during these peak hours are shown in ***Figures 5-1***, ***5-2***, and ***5-3***, respectively. Summary data worksheets of the manual vehicle classification turning movement counts at the study intersections are contained in ***Appendix A***.

It should be noted that the vehicle classification counts categorized the following vehicle types; passenger car vehicles, buses, single unit trucks, and semi-tractor trailer trucks. The traffic volumes shown in the figures and used for analysis purposes reflect appropriate adjustments (i.e., passenger car equivalent, or PCE) to account for the presence of truck traffic that travels within the study area. Accordingly, a PCE of 1.0 was used for passenger car vehicles, a PCE of 2.0 was used for buses, single unit trucks, 3-axle trucks, and 4-axle semi-tractor trailer trucks, and a PCE of 3.0 was used for 5-axle or more semi-tractor trailer trucks. The application of passenger car equivalency factors stem from discussions provided in the *Highway Capacity Manual 2010* (Transportation Research Board, National Research Council, Washington D.C., 2010) and the *Roundabouts: An Informational Guide* (U.S. Department of Transportation Federal Highway Administration, 2000).

Table 5-1
EXISTING TRAFFIC VOLUMES [1]

NO.	INTERSECTION	DATE	DIR	AM PEAK HOUR BEGAN	AM PEAK HOUR VOLUME	MID-DAY PEAK HOUR BEGAN	MID-DAY PEAK HOUR VOLUME	PM PEAK HOUR BEGAN	PM PEAK HOUR VOLUME
1	Arleta Avenue/	01/14/2014	NB	7:15	0	1:00	0	4:45	0
	Devonshire Street	[2]	SB		955		318		487
			EB		1,325		519		918
			WB		852		444		786
2	Arleta Avenue/	01/14/2014	NB	7:15	602	1:00	359	4:45	776
	Paxton Street	[2]	SB		408		126		155
			EB		0		0		0
			WB		753		379		542
3	I-5 Freeway SB Ramps-Sharp Avenue/	01/14/2014	NB	7:15	103	1:00	37	4:30	61
	Paxton Street	[2]	SB		508		106		276
			EB		713		406		738
			WB		668		453		561
4	I-5 Freeway NB Ramps-Remick Avenue/	01/14/2014	NB	7:00	105	1:00	70	4:30	57
	Paxton Street	[2]	SB		69		121		132
			EB		729		464		869
			WB		786		469		700
5	Laurel Canyon Boulevard/	01/14/2014	NB	7:15	691	1:00	661	4:45	1,121
	Branford Street	[2]	SB		1,246		600		713
			EB		954		517		734
			WB		832		473		755
6	San Fernando Road/	01/14/2014	NB	7:15	663	1:00	655	4:30	909
	Branford Street	[2]	SB		1,161		590		516
			EB		683		367		393
			WB		436		412		484
7	Laurel Canyon Boulevard/	01/15/2014	NB	7:15	556	12:15	414	5:00	1,043
	I-5 Freeway NB Off-Ramp-Jerome Street	[2]	SB		1,358		527		807
			EB		305		189		269
			WB		94		41		65
8	Laurel Canyon Boulevard/	01/15/2014	NB	7:15	614	12:00	498	4:45	1,043
	Sheldon Street	[2]	SB		1,562		678		981
			EB		1,052		606		1,083
			WB		1,064		564		837
9	Laurel Canyon Boulevard/	01/15/2014	NB	7:15	729	12:00	530	4:45	1,076
	I-5 Freeway SB Ramps	[2]	SB		1,253		673		955
			EB		0		0		0
			WB		115		193		249
10	I-5 Freeway NB On-Ramp-Rincon Avenue/	01/15/2014	NB	7:15	0	12:00	0	4:45	0
	Sheldon Street	[2]	SB		42		53		43
			EB		1,187		783		1,235
			WB		1,269		698		961
11	Haddon Avenue/	01/15/2014	NB	7:15	282	12:00	61	3:00	125
	Sheldon Street	[2]	SB		103		28		37
			EB		938		639		1,051
			WB		1,085		644		852
12	Telfair Avenue/	01/15/2014	NB	7:15	217	12:30	59	4:30	149
	Sheldon Street	[2]	SB		89		17		37
			EB		745		597		861
			WB		1,012		557		712

[1] Counts conducted by City Traffic Counters.
[2] Year 2014 counts were increased by 1.5% to reflect current year 2015 conditions.

Table 5-1 (Continued)
EXISTING TRAFFIC VOLUMES [1]

NO.	INTERSECTION	DATE	DIR	AM PEAK HOUR BEGAN	AM PEAK HOUR VOLUME	MID-DAY PEAK HOUR BEGAN	MID-DAY PEAK HOUR VOLUME	PM PEAK HOUR BEGAN	PM PEAK HOUR VOLUME
13	San Fernando Road/	01/15/2014	NB	7:15	983	1:00	592	4:30	854
	Sheldon Street	[2]	SB		774		488		723
			EB		636		641		958
			WB		1,305		603		722
14	Glenoaks Boulevard/	01/15/2014	NB	7:30	586	12:00	673	4:30	1,070
	Sheldon Street	[2]	SB		1,555		711		979
			EB		565		522		838
			WB		593		274		331
15	Laurel Canyon Boulevard/	03/26/2015	NB	7:30	1,146	12:30	744	5:00	1,546
	Paxton Street		SB		1,722		738		1,479
			EB		712		454		887
			WB		713		434		754
16	Haddon Avenue/	03/26/2015	NB	7:15	108	1:00	39	5:00	82
	Paxton Street		SB		9		9		10
			EB		841		506		1,054
			WB		844		577		758
17	Kewen Avenue/	03/26/2015	NB	7:15	122	12:45	34	5:00	74
	Paxton Street		SB		0		0		0
			EB		887		543		1,062
			WB		837		547		774
18	Telfair Avenue/	03/26/2015	NB	7:15	158	12:15	75	5:00	130
	Paxton Street		SB		185		78		122
			EB		936		545		1,081
			WB		759		519		753
19	San Fernando Road/	03/25/2015	NB	7:15	1,112	12:15	1,095	4:45	1,053
	Paxton Street		SB		1,180		900		1,035
			EB		883		579		954
			WB		1,001		904		1,043
20	San Fernando Road/	03/25/2015	NB	7:15	713	12:00	693	4:30	927
	SR-118 Freeway EB Ramps		SB		1,007		820		1,082
			EB		953		686		750
			WB		0		0		0
21	San Fernando Road/	03/25/2015	NB	7:15	659	12:00	604	3:45	815
	Van Nuys Boulevard		SB		1,204		661		869
			EB		1,020		889		1,042
			WB		1,129		757		1,111
22	San Fernando Road/	03/25/2015	NB	7:15	719	1:00	633	4:30	1,008
	Pierce Street		SB		1,256		672		801
			EB		247		158		239
			WB		379		160		314
23	San Fernando Road/	03/25/2015	NB	7:15	539	12:45	545	4:45	919
	Terra Bella Street		SB		1,434		663		857
			EB		355		200		337
			WB		0		0		0
24	San Fernando Road/	03/25/2015	NB	7:15	420	12:00	437	3:30	699
	Osborne Street		SB		1,052		676		700
			EB		713		667		797
			WB		944		680		889

[1] Counts conducted by City Traffic Counters.
[2] Year 2014 counts were increased by 1.5% to reflect current year 2015 conditions.

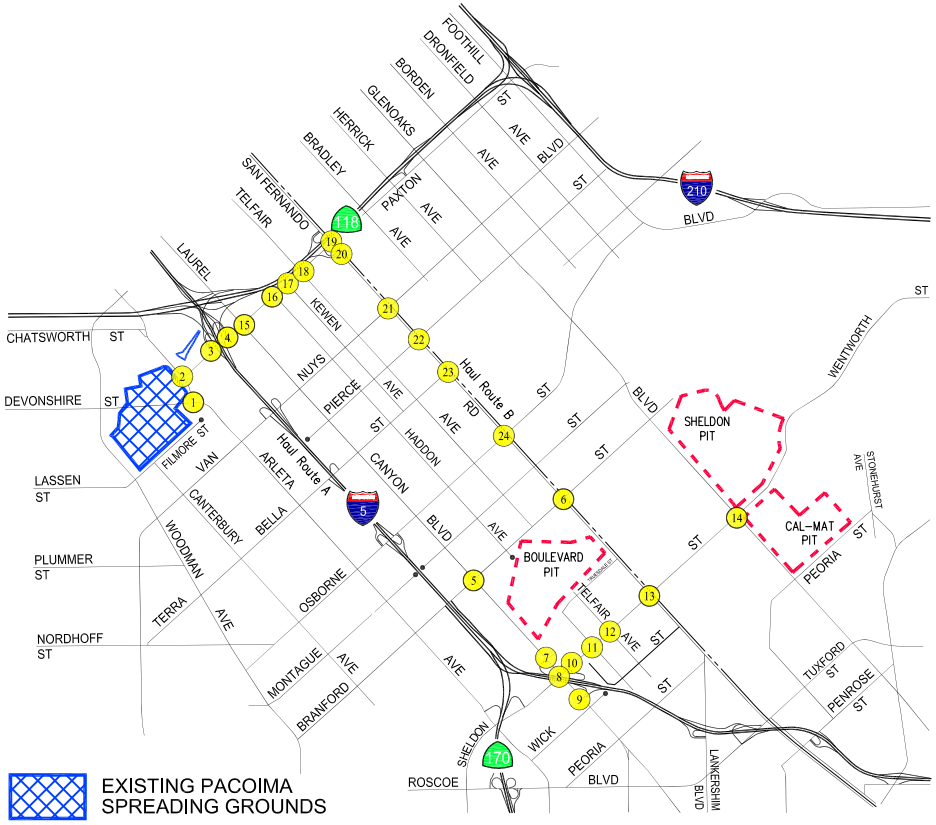

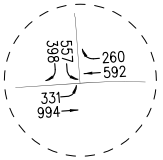

No. 1
Arleta Ave/
Devonshire St

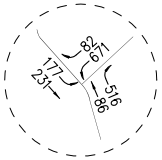

No. 2
Arleta Ave/
Paxton St

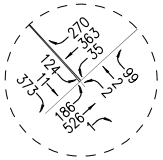

No. 3
I-5 Fwy SB
Ramps-Sharp Ave/
Paxton St

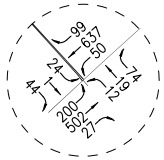

No. 4
I-5 Fwy NB
Ramps-Remick Ave/
Paxton St

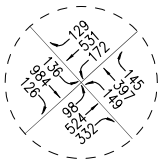

No. 5
Laurel Canyon Blvd/
Branford St

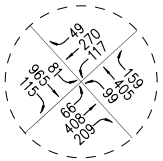

No. 6
San Fernando Rd/
Branford St

No. 7
Laurel Canyon
Blvd/I-5 Fwy NB
Off-Ramp-Jerome St

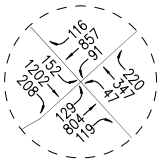

No. 8
Laurel Canyon Blvd/
Sheldon St

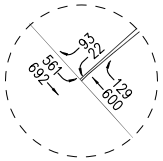

No. 9
Laurel Canyon Blvd/
I-5 Fwy SB Ramps

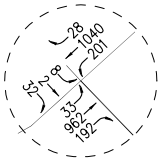

No. 10
I-5 Fwy NB
On-Ramp-Rincon
Ave/
Sheldon St

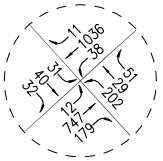

No. 11
Haddon Ave/
Sheldon St

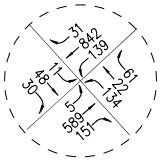

No. 12
Telfair Ave/
Sheldon St

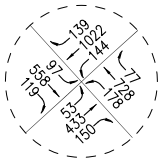

No. 13
San Fernando Rd/
Sheldon St

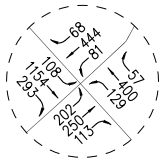

No. 14
Glenoaks Blvd/
Sheldon St

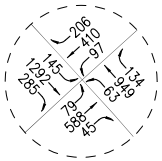

No. 15
Laurel Canyon Blvd/
Paxton St

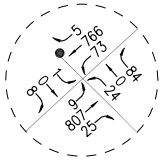

No. 16
Haddon Ave/
Paxton St

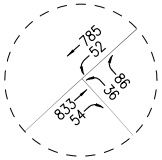

No. 17
Kewen Ave/
Paxton St

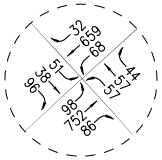

No. 18
Telfair Ave/
Paxton St

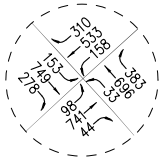

No. 19
San Fernando Rd/
Paxton St

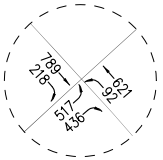

No. 20
San Fernando Rd/
SR-118 Fwy EB
Ramps

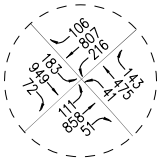

No. 21
San Fernando Rd/
Van Nuys Blvd

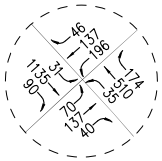

No. 22
San Fernando Rd/
Pierce St

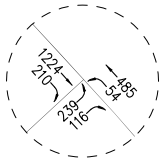

No. 23
San Fernando Rd/
Terra Bella St

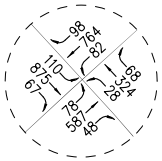

No. 24
San Fernando Rd/
Osborne St

N

NOT TO SCALE

LINSCOTT, LAW & GREENSPAN, engineers

FIGURE 5-1
EXISTING TRAFFIC VOLUMES

WEEKDAY AM PEAK HOUR

PACOIMA SPREADING GROUNDS IMPROVEMENT PROJECT

o:\job_file\4056-2\dwg\f5-1.dwg LDP 12:49:26 04/16/2015 rodriguez

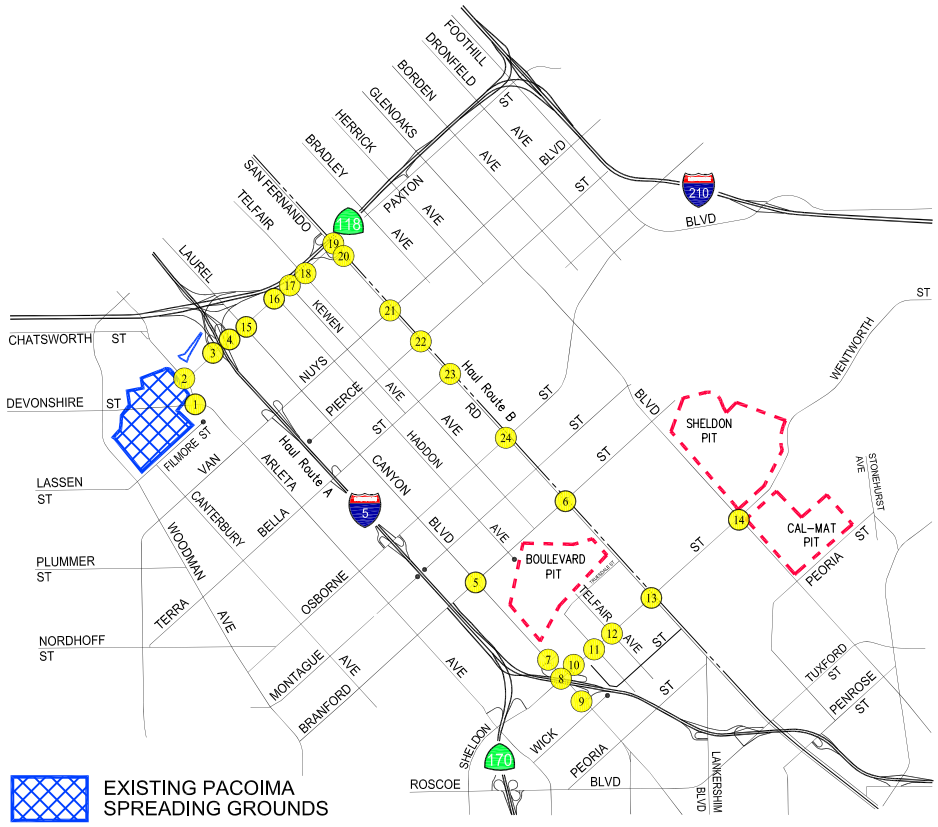

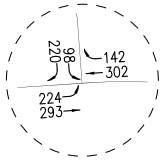

No. 1
Arleta Ave/
Devonshire St

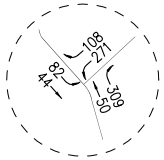

No. 2
Arleta Ave/
Paxton St

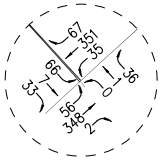

No. 3
I-5 Fwy SB
Ramps-Sharp Ave/
Paxton St

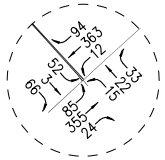

No. 4
I-5 Fwy NB
Ramps-Remick Ave/
Paxton St

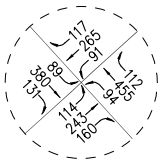

No. 5
Laurel Canyon Blvd/
Branford St

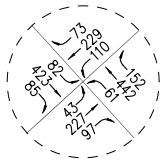

No. 6
San Fernando Rd/
Branford St

No. 7
Laurel Canyon
Blvd/I-5 Fwy NB
Off-Ramp-Jerome St

No. 8
Laurel Canyon Blvd/
Sheldon St

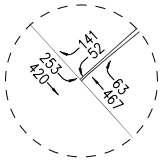

No. 9
Laurel Canyon Blvd/
I-5 Fwy SB Ramps

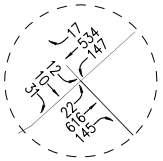

No. 10
I-5 Fwy NB
On-Ramp-Rincon
Ave/
Sheldon St

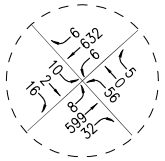

No. 11
Haddon Ave/
Sheldon St

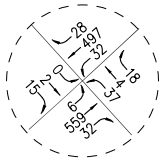

No. 12
Telfair Ave/
Sheldon St

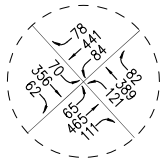

No. 13
San Fernando Rd/
Sheldon St

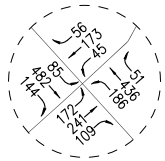

No. 14
Glenoaks Blvd/
Sheldon St

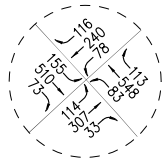

No. 15
Laurel Canyon Blvd/
Paxton St

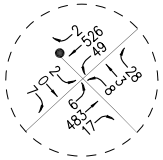

No. 16
Haddon Ave/
Paxton St

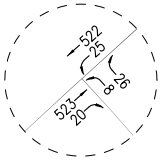

No. 17
Kewen Ave/
Paxton St

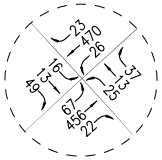

No. 18
Telfair Ave/
Paxton St

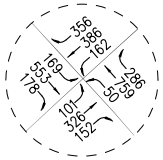

No. 19
San Fernando Rd/
Paxton St

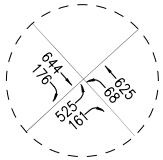

No. 20
San Fernando Rd/
SR-118 Fwy EB
Ramps

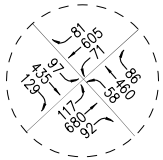

No. 21
San Fernando Rd/
Van Nuys Blvd

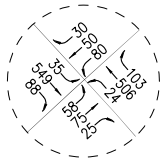

No. 22
San Fernando Rd/
Pierce St

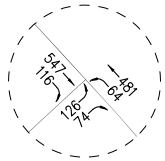

No. 23
San Fernando Rd/
Terra Bella St

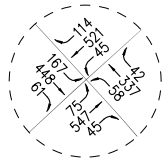

No. 24
San Fernando Rd/
Osborne St

N

NOT TO SCALE

LINSCOTT, LAW & GREENSPAN, engineers

FIGURE 5-2
EXISTING TRAFFIC VOLUMES

WEEKDAY MID-DAY PEAK HOUR

PACOIMA SPREADING GROUNDS IMPROVEMENT PROJECT

o:\job_file\4056-2\dwg\f5-2.dwg LDP 12:32:25 07/02/2015 rodriguez

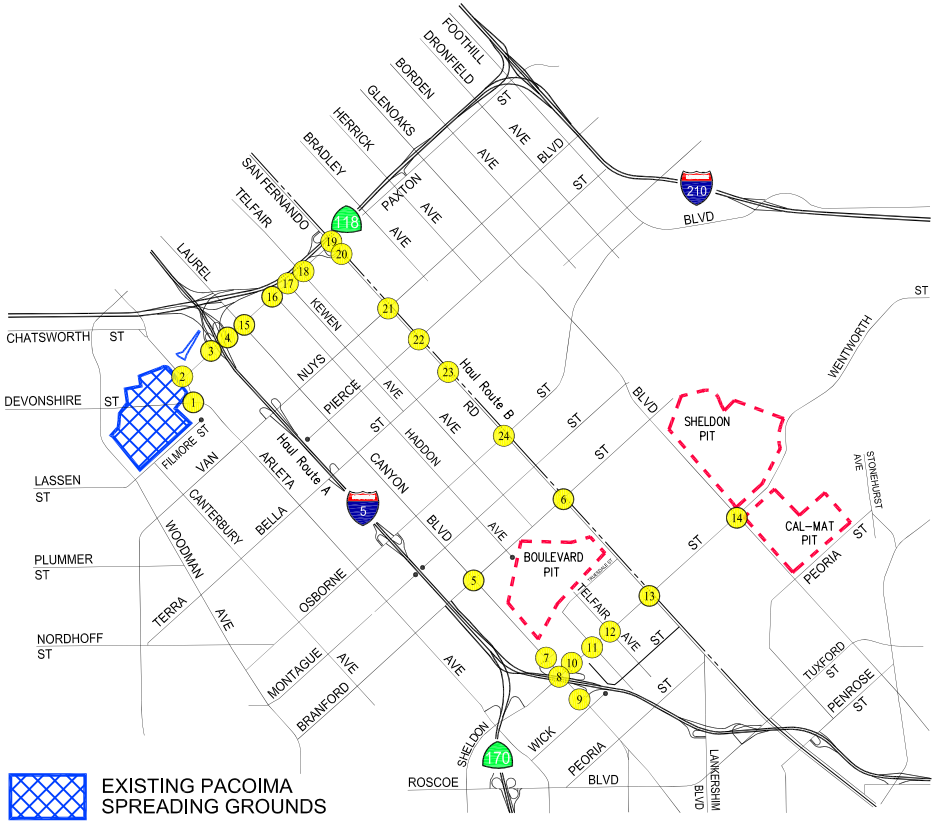

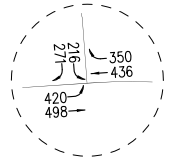

No. 1
Arleta Ave/
Devonshire St

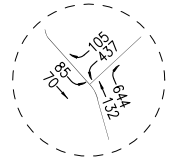

No. 2
Arleta Ave/
Paxton St

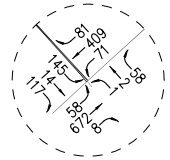

No. 3
I-5 Fwy SB
Ramps-Sharp Ave/
Paxton St

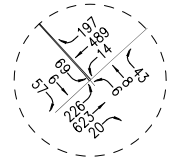

No. 4
I-5 Fwy NB
Ramps-Remick Ave/
Paxton St

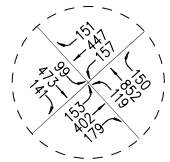

No. 5
Laurel Canyon Blvd/
Branford St

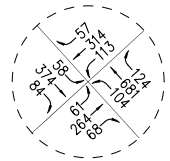

No. 6
San Fernando Rd/
Branford St

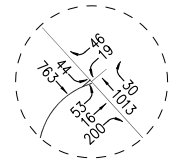

No. 7
Laurel Canyon
Blvd/I-5 Fwy NB
Off-Ramp-Jerome St

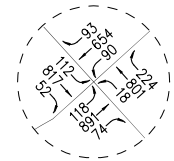

No. 8
Laurel Canyon Blvd/
Sheldon St

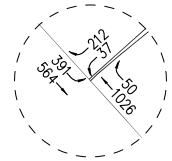

No. 9
Laurel Canyon Blvd/
I-5 Fwy SB Ramps

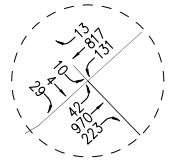

No. 10
I-5 Fwy NB
On-Ramp-Rincon
Ave/
Sheldon St

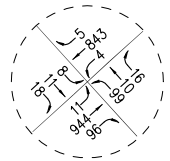

No. 11
Haddon Ave/
Sheldon St

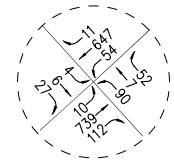

No. 12
Telfair Ave/
Sheldon St

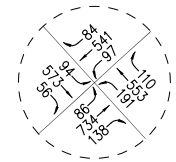

No. 13
San Fernando Rd/
Sheldon St

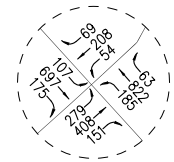

No. 14
Glenoaks Blvd/
Sheldon St

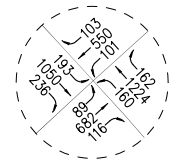

No. 15
Laurel Canyon Blvd/
Paxton St

No. 16
Haddon Ave/
Paxton St

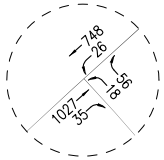

No. 17
Kewen Ave/
Paxton St

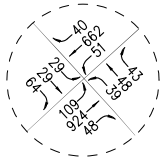

No. 18
Telfair Ave/
Paxton St

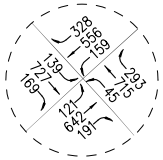

No. 19
San Fernando Rd/
Paxton St

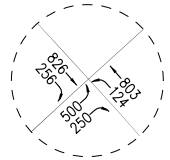

No. 20
San Fernando Rd/
SR-118 Fwy EB
Ramps

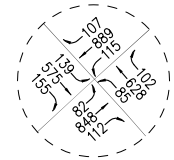

No. 21
San Fernando Rd/
Van Nuys Blvd

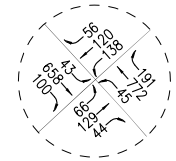

No. 22
San Fernando Rd/
Pierce St

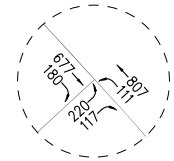

No. 23
San Fernando Rd/
Terra Bella St

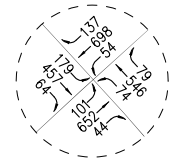

No. 24
San Fernando Rd/
Osborne St

N

NOT TO SCALE

LINSCOTT, LAW & GREENSPAN, engineers

FIGURE 5-3
EXISTING TRAFFIC VOLUMES

WEEKDAY PM PEAK HOUR

PACOIMA SPREADING GROUNDS IMPROVEMENT PROJECT

o:\job_file\4056-2\dwg\f5-3.dwg LDP 14:11:16 07/02/2015 rodriguez

6.0 TRAFFIC FORECASTING METHODOLOGY

In order to estimate the traffic impact characteristics of the proposed project, a multi-step process has been utilized. The first step is trip generation, which estimates the total arriving and departing traffic volumes on a peak-hour and daily basis. For projects, the traffic generation potential is typically forecast by applying the appropriate vehicle trip generation equations or rates to the project development tabulation.

The second step of the forecasting process is trip distribution, which identifies the origins and destinations of inbound and outbound project traffic volumes. These origins and destinations are typically based on demographics and existing/anticipated travel patterns in the study area.

The third step is traffic assignment, which involves the allocation of project traffic to study area streets and intersections. Traffic assignment is typically based on minimization of travel time, which may or may not involve the shortest route, depending on prevailing operating conditions and travel speeds. Traffic distribution patterns are indicated by general percentage orientation, while traffic assignment allocates specific volume forecasts to individual roadway links and intersections throughout the study area.

With the forecasting process complete and project traffic assignments developed, the impact of the proposed project is isolated by comparing operational (i.e., Level of Service [LOS]) conditions at selected key locations using existing and expected future traffic volumes with and without forecast project traffic. The need for site-specific and/or cumulative local area traffic improvements can then be evaluated and the significance of the project's impacts identified.

6.1 Project Trip Generation

Traffic generation is expressed in vehicle trip ends, defined as one-way vehicular movements, either entering or exiting the generating land use. Trip generation equations and/or rates provided in the ITE *Trip Generation Manual* publication[3] were not utilized to forecast traffic generation for the proposed project, as the ITE document does not contain trip rates for specifically this type of expected construction-related hauling operation. Therefore, the project trip generation forecast was derived based on the development of employee and truck forecasts given the expected hauling capacities as well as the application of passenger car equivalency (PCE) factors, as described more fully below.

Traffic volumes expected to be generated by the proposed Pacoima Spreading Grounds Improvement project were based on coordination with LACFCD staff. The forecast of employee vehicle trips was provided and accounts for the employees at the Pacoima Spreading Grounds facility. Two inbound and two outbound vehicle trips are anticipated during each of the weekday analysis time periods.

[3] *Trip Generation Manual,* Institute of Transportation Engineers, 9th Edition, 2012.

In developing the forecast of truck trip generation several factors were taken into consideration:

- Hours of Hauling Operation
- Capacity of Haul Trucks (14 or 18 cubic yards per truck)
- Application of PCE Factors
- Amount of Anticipated Export

As noted above, in order to account for the affect that trucks have on overall intersection operations, PCE factors were accounted for in the analysis of potential construction-related traffic impacts. Based on a review of the size of haul trucks expected to be utilized by the County, a PCE factor of 2.5 or 3.0 was incorporated into the traffic analysis (i.e., it is assumed that a single 14 cubic yard haul truck has the same overall affect on traffic operations as 2.5 passenger cars and that a single 18 cubic yard haul truck has the same overall affect on traffic operations as 3.0 passenger cars). This assumption is conservative and accounts for the heavy vehicle type and slower speeds when fully loaded. The traffic generation forecast for the proposed project is summarized in ***Table 6-1***.

As presented in *Table 6-1*, using haul trucks with 14 cubic yard capacity per truck, the proposed project is expected to generate 104 PCE-adjusted vehicle trips (52 inbound trips and 52 outbound trips) during the weekday AM peak hour, mid-day peak hour, and PM peak hour and 1,218 PCE-adjusted daily trip ends during a typical weekday (609 inbound trips and 609 outbound trips). As presented in *Table 6-1*, using haul trucks with 18 cubic yard capacity per truck, the proposed project is expected to generate 94 PCE-adjusted vehicle trips (47 inbound trips and 47 outbound trips) during the weekday AM peak hour, mid-day peak hour, and PM peak hour and 1,098 PCE-adjusted daily trip ends during a typical weekday (549 inbound trips and 549 outbound trips).

By comparison, using haul trucks with 14 cubic yard capacity per truck will provide a slightly higher, more conservative assessment of potential project trip generation. Therefore, this traffic impact analysis utilizes the project trip generation forecasts based on the use of 14 cubic yard haul trucks so as to provide a conservative assessment of potential project-related traffic impacts.

6.2 Project Trip Distribution and Assignment

Project traffic volumes both entering and exiting the Pacoima spreading Grounds site have been distributed and assigned to the adjacent street system based on the following considerations:

- The site's proximity to major traffic corridors (i.e., I-5 Freeway, Laurel Canyon Boulevard, Sheldon Street, San Fernando Road, Glenoaks Boulevard, etc.);
- Expected localized traffic flow patterns based on adjacent roadway channelization and presence of traffic signals;
- Existing intersection traffic volumes;

Table 6-1
PROJECT TRIP GENERATION [1]

LAND USE	DAILY TRIP ENDS [2] VOLUMES	AM PEAK HOUR VOLUMES [2]			MID-DAY PEAK HOUR VOLUMES [2]			PM PEAK HOUR VOLUMES [2]		
		IN	OUT	TOTAL	IN	OUT	TOTAL	IN	OUT	TOTAL
[A] Employees - Site 1 at Pacoima Spreading Grounds	18	2	2	4	2	2	4	2	2	4
[B] 14-cy Truck Trips (unadjusted) [3]	480	20	20	40	20	20	40	20	20	40
[C] 18-cy Truck Trips (unadjusted) [4]	360	15	15	30	15	15	30	15	15	30
[D] PCE Adjusted 14-cy Truck Trips [5]	1,200	50	50	100	50	50	100	50	50	100
[E] PCE Adjusted 18-cy Truck Trips [6]	1,080	45	45	90	45	45	90	45	45	90
Net Increase with 14-CY Trucks ([A]+[D])	**1,218**	**52**	**52**	**104**	**52**	**52**	**104**	**52**	**52**	**104**
Net Increase with 18-CY Trucks ([A]+[E])	**1,098**	**47**	**47**	**94**	**47**	**47**	**94**	**47**	**47**	**94**

[1] Source: Based on coordination with LA County representatives and BonTerra Psomas.
The number of truck hauling hours was determined based on:
69 hours/week x 52 weeks/year - 120 hours holiday/year = 3,468 hours/year x 1.5 years = 5,202 total hours.

[2] Trips are one-way traffic movements, entering or leaving.

[3] Peak hour and daily truck trips were derived based on the following, using 14 cubic yard (cy) capacity per haul truck:
- Peak Hour Truck Trips = 1,370,000 cy of sediment to be exported / 5,202 total working hours / 14 cy per truck = 19 one-way truck trips.
Thus, for analysis purposes 20 inbound truck trips + 20 outbound truck trips = 40 total truck trips per hour have been assumed.
- Daily Truck Trips = 40 Peak Hour Truck Trips x 12 hours = 480 total truck trips per day (i.e., 240 inbound trips + 240 outbound trips).

[4] Peak hour and daily truck trips were derived based on the following, using 18 cubic yard (cy) capacity per haul truck:
- Peak Hour Truck Trips = 1,370,000 cy of sediment to be exported / 5,202 total working hours / 18 cy per truck = 15 one-way truck trips.
Thus, for analysis purposes 15 inbound truck trips + 15 outbound truck trips = 30 total truck trips per hour have been assumed.
- Daily Truck Trips = 30 Peak Hour Truck Trips x 12 hours = 360 total truck trips per day (i.e., 180 inbound trips + 180 outbound trips).

[5] A passenger car equivalency (PCE) factor of 2.5 was employed for analysis purposes. This accounts for the assumption that a single 14 cubic yard capacity haul truck has the same overall affect on intersection traffic operations as 2.5 passenger cars.

[6] A passenger car equivalency (PCE) factor of 3.0 was employed for analysis purposes. This accounts for the assumption that a single 18 cubic yard capacity haul truck has the same overall affect on intersection traffic operations as 3.0 passenger cars.

- Ingress/egress availability at each of the sediment disposal sites;
- The proposed haul routes to and from each of the three sediment disposal sites; and
- A generalized distribution of 60% via I-5 Freeway (Haul Route A) and 40% via San Fernando Road (Haul Route B).

The PCE-adjusted traffic volumes at the study intersections for the weekday AM, mid-day and PM peak hours are displayed in ***Figures 6–1, 6-2, 6-3*** and ***6-4*** for Alternatives 1, 2, 3, and 4, respectively. As discussed earlier in Subsection 2.2 herein, the following alternatives have been fully analyzed for purposes of this traffic analysis:

- Alternative 1: Concurrent Use of All Three Sediment Disposal Sites (Boulevard Pit, Sheldon Pit, and the Cal-Mat Pit)
- Alternative 2: Use of Boulevard Pit Only
- Alternative 3: Use of Sheldon Pit Only
- Alternative 4: Use of Cal-Mat Pit Only

Any combination of the use of only two of the three disposal sites (e.g., concurrent use of only the Boulevard and Sheldon Pits) would have the same or less potential temporary traffic impacts than those identified under either Alternative 2 or Alternative 3. Therefore, since all combinations of two of the three disposal sites would have the same or less traffic impacts than those identified under Alternative 4 (i.e., the only Alternative with a significant temporary traffic impact), all potential traffic impacts have been covered for environmental review purposes.

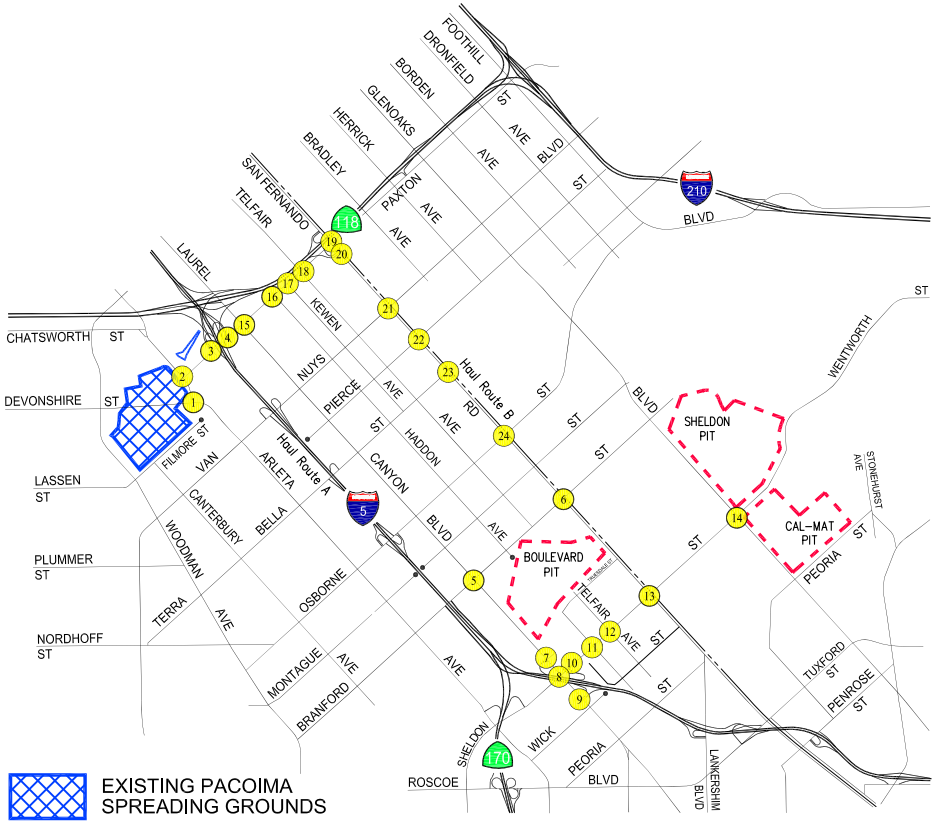

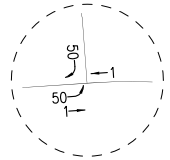

No. 1
Arleta Ave/
Devonshire St

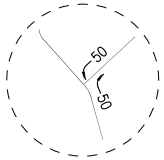

No. 2
Arleta Ave/
Paxton St

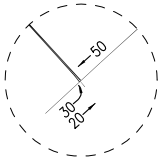

No. 3
I-5 Fwy SB
Ramps-Sharp Ave/
Paxton St

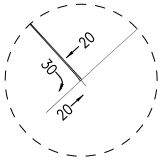

No. 4
I-5 Fwy NB
Ramps-Remick Ave/
Paxton St

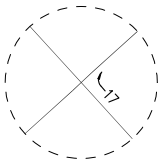

No. 5
Laurel Canyon Blvd/
Branford St

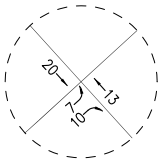

No. 6
San Fernando Rd/
Branford St

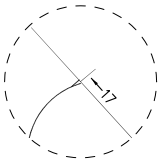

No. 7
Laurel Canyon
Blvd/I-5 Fwy NB
Off-Ramp-Jerome St

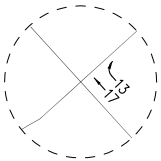

No. 8
Laurel Canyon Blvd/
Sheldon St

No. 9
Laurel Canyon Blvd/
I-5 Fwy SB Ramps

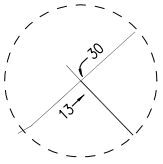

No. 10
I-5 Fwy NB
On-Ramp-Rincon
Ave/
Sheldon St

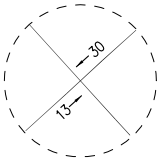

No. 11
Haddon Ave/
Sheldon St

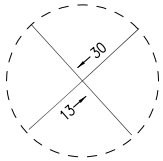

No. 12
Telfair Ave/
Sheldon St

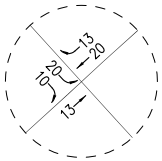

No. 13
San Fernando Rd/
Sheldon St

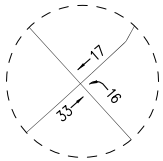

No. 14
Glenoaks Blvd/
Sheldon St

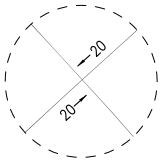

No. 15
Laurel Canyon Blvd/
Paxton St

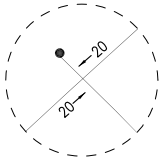

No. 16
Haddon Ave/
Paxton St

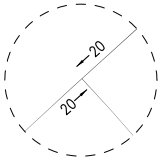

No. 17
Kewen Ave/
Paxton St

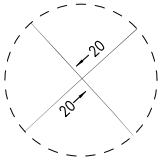

No. 18
Telfair Ave/
Paxton St

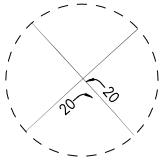

No. 19
San Fernando Rd/
Paxton St

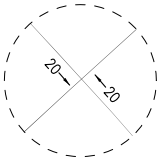

No. 20
San Fernando Rd/
SR-118 Fwy EB
Ramps

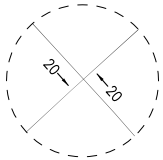

No. 21
San Fernando Rd/
Van Nuys Blvd

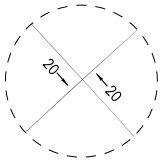

No. 22
San Fernando Rd/
Pierce St

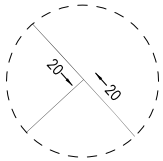

No. 23
San Fernando Rd/
Terra Bella St

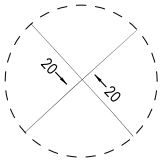

No. 24
San Fernando Rd/
Osborne St

N

NOT TO SCALE

XX - PCE ADJUSTED PROJECT VEHICLE TRIPS

FIGURE 6-1
PROJECT TRAFFIC VOLUMES

WEEKDAY AM, MID-DAY, AND PM PEAK HOURS
ALTERNATIVE ROUTE 1

PACOIMA SPREADING GROUNDS IMPROVEMENT PROJECT

LINSCOTT, LAW & GREENSPAN, engineers

o:\job_file\4056-2\dwg\f6-1.dwg LDP 14:11:52 07/02/2015 rodriguez

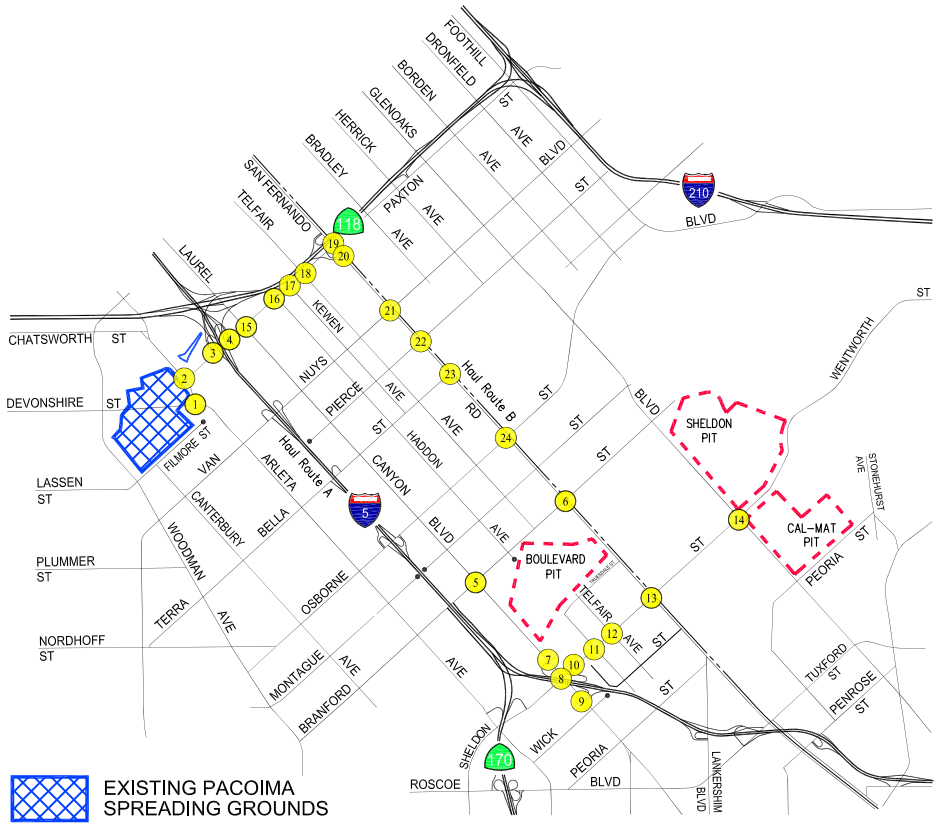

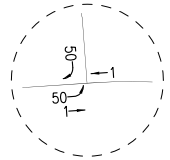

No. 1
Arleta Ave/
Devonshire St

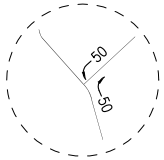

No. 2
Arleta Ave/
Paxton St

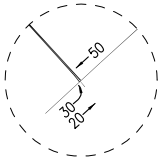

No. 3
I-5 Fwy SB
Ramps-Sharp Ave/
Paxton St

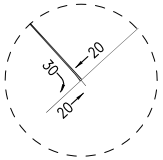

No. 4
I-5 Fwy NB
Ramps-Remick Ave/
Paxton St

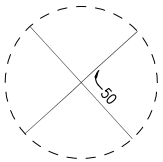

No. 5
Laurel Canyon Blvd/
Branford St

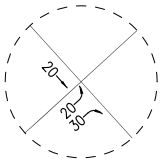

No. 6
San Fernando Rd/
Branford St

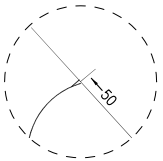

No. 7
Laurel Canyon
Blvd/I-5 Fwy NB
Off-Ramp-Jerome St

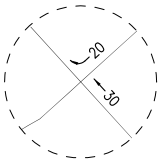

No. 8
Laurel Canyon Blvd/
Sheldon St

No. 9
Laurel Canyon Blvd/
I-5 Fwy SB Ramps

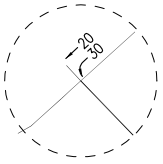

No. 10
I-5 Fwy NB
On-Ramp-Rincon
Ave/
Sheldon St

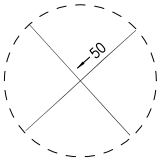

No. 11
Haddon Ave/
Sheldon St

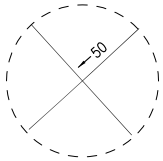

No. 12
Telfair Ave/
Sheldon St

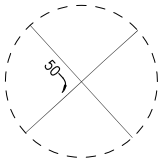

No. 13
San Fernando Rd/
Sheldon St

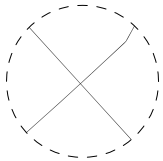

No. 14
Glenoaks Blvd/
Sheldon St

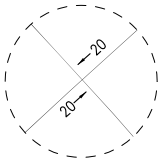

No. 15
Laurel Canyon Blvd/
Paxton St

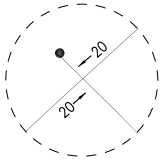

No. 16
Haddon Ave/
Paxton St

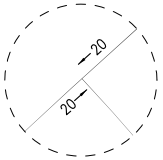

No. 17
Kewen Ave/
Paxton St

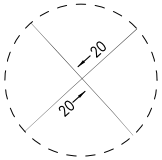

No. 18
Telfair Ave/
Paxton St

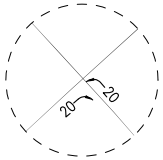

No. 19
San Fernando Rd/
Paxton St

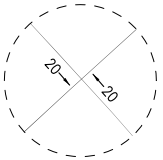

No. 20
San Fernando Rd/
SR-118 Fwy EB
Ramps

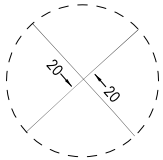

No. 21
San Fernando Rd/
Van Nuys Blvd

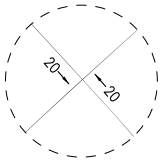

No. 22
San Fernando Rd/
Pierce St

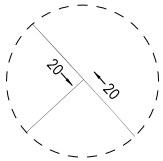

No. 23
San Fernando Rd/
Terra Bella St

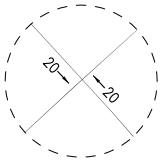

No. 24
San Fernando Rd/
Osborne St

N

NOT TO SCALE

XX - PCE ADJUSTED PROJECT VEHICLE TRIPS

FIGURE 6-2
PROJECT TRAFFIC VOLUMES

WEEKDAY AM, MID-DAY, AND PM PEAK HOURS
ALTERNATIVE ROUTE 2

PACOIMA SPREADING GROUNDS IMPROVEMENT PROJECT

LINSCOTT, LAW & GREENSPAN, engineers

o:\job_file\4056-2\dwg\f6-2.dwg LDP 14:12:13 07/02/2015 rodriguez

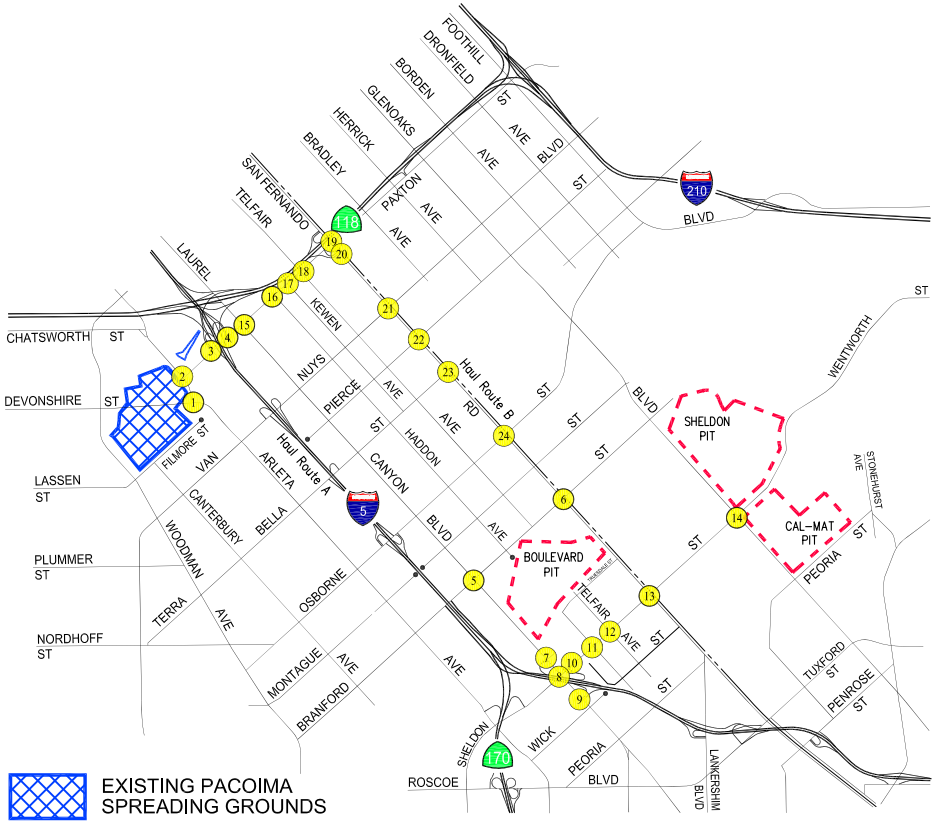

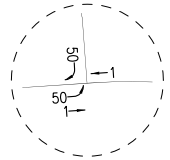

No. 1
Arleta Ave/
Devonshire St

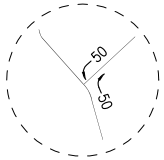

No. 2
Arleta Ave/
Paxton St

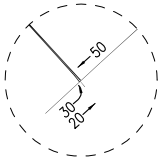

No. 3
I-5 Fwy SB
Ramps-Sharp Ave/
Paxton St

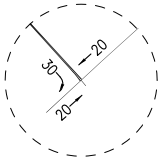

No. 4
I-5 Fwy NB
Ramps-Remick Ave/
Paxton St

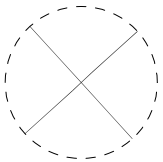

No. 5
Laurel Canyon Blvd/
Branford St

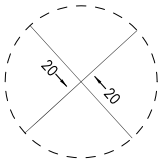

No. 6
San Fernando Rd/
Branford St

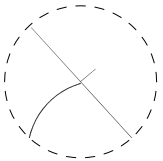

No. 7
Laurel Canyon
Blvd/I-5 Fwy NB
Off-Ramp-Jerome St

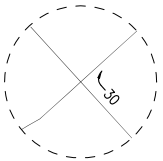

No. 8
Laurel Canyon Blvd/
Sheldon St

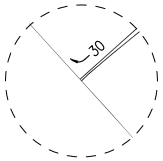

No. 9
Laurel Canyon Blvd/
I-5 Fwy SB Ramps

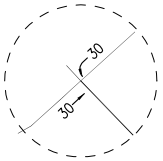

No. 10
I-5 Fwy NB
On-Ramp-Rincon
Ave/
Sheldon St

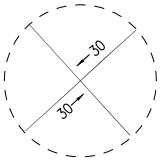

No. 11
Haddon Ave/
Sheldon St

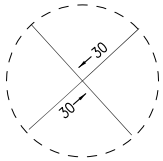

No. 12
Telfair Ave/
Sheldon St

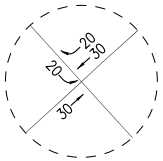

No. 13
San Fernando Rd/
Sheldon St

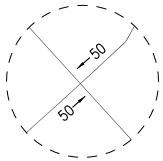

No. 14
Glenoaks Blvd/
Sheldon St

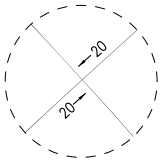

No. 15
Laurel Canyon Blvd/
Paxton St

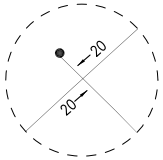

No. 16
Haddon Ave/
Paxton St

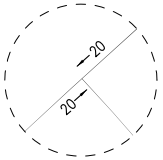

No. 17
Kewen Ave/
Paxton St

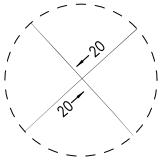

No. 18
Telfair Ave/
Paxton St

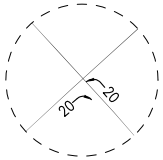

No. 19
San Fernando Rd/
Paxton St

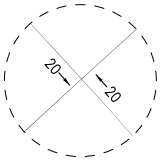

No. 20
San Fernando Rd/
SR-118 Fwy EB
Ramps

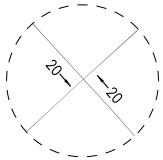

No. 21
San Fernando Rd/
Van Nuys Blvd

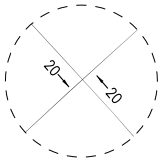

No. 22
San Fernando Rd/
Pierce St

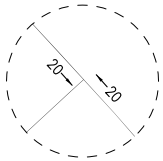

No. 23
San Fernando Rd/
Terra Bella St

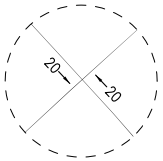

No. 24
San Fernando Rd/
Osborne St

N

NOT TO SCALE

XX - PCE ADJUSTED PROJECT VEHICLE TRIPS

FIGURE 6-3
PROJECT TRAFFIC VOLUMES

WEEKDAY AM, MID-DAY, AND PM PEAK HOURS
ALTERNATIVE ROUTE 3

PACOIMA SPREADING GROUNDS IMPROVEMENT PROJECT

LINSCOTT, LAW & GREENSPAN, engineers

o:\job_file\4056-2\dwg\f6-3.dwg LDP 14:12:32 07/02/2015 rodriguez

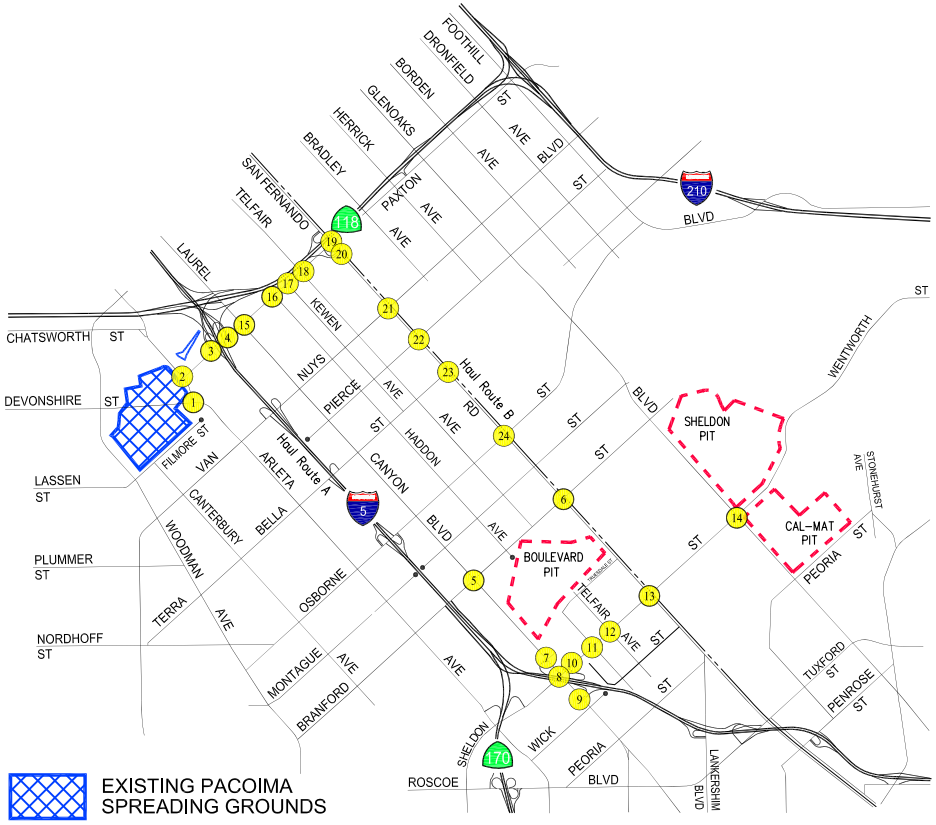

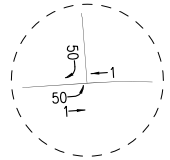

No. 1
Arleta Ave/
Devonshire St

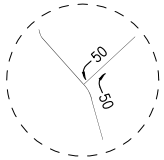

No. 2
Arleta Ave/
Paxton St

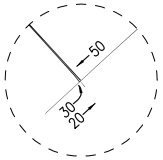

No. 3
I-5 Fwy SB
Ramps-Sharp Ave/
Paxton St

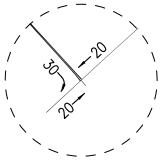

No. 4
I-5 Fwy NB
Ramps-Remick Ave/
Paxton St

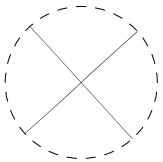

No. 5
Laurel Canyon Blvd/
Branford St

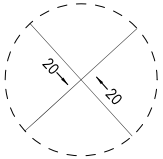

No. 6
San Fernando Rd/
Branford St

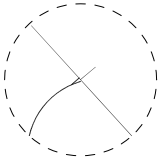

No. 7
Laurel Canyon
Blvd/I-5 Fwy NB
Off-Ramp-Jerome St

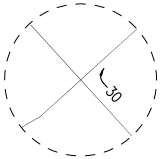

No. 8
Laurel Canyon Blvd/
Sheldon St

No. 9
Laurel Canyon Blvd/
I-5 Fwy SB Ramps

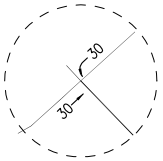

No. 10
I-5 Fwy NB
On-Ramp-Rincon
Ave/
Sheldon St

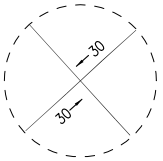

No. 11
Haddon Ave/
Sheldon St

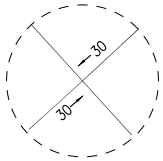

No. 12
Telfair Ave/
Sheldon St

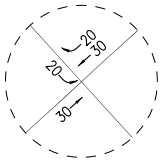

No. 13
San Fernando Rd/
Sheldon St

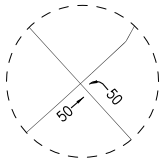

No. 14
Glenoaks Blvd/
Sheldon St

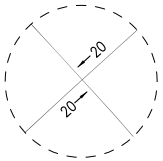

No. 15
Laurel Canyon Blvd/
Paxton St

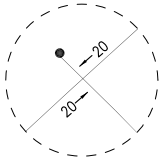

No. 16
Haddon Ave/
Paxton St

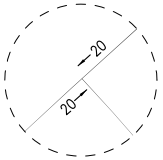

No. 17
Kewen Ave/
Paxton St

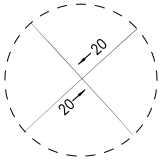

No. 18
Telfair Ave/
Paxton St

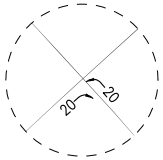

No. 19
San Fernando Rd/
Paxton St

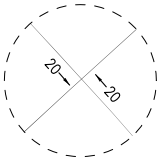

No. 20
San Fernando Rd/
SR-118 Fwy EB
Ramps

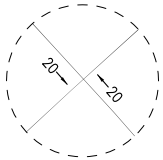

No. 21
San Fernando Rd/
Van Nuys Blvd

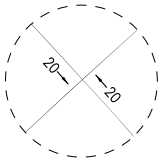

No. 22
San Fernando Rd/
Pierce St

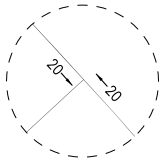

No. 23
San Fernando Rd/
Terra Bella St

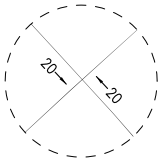

No. 24
San Fernando Rd/
Osborne St

N

NOT TO SCALE

XX - PCE ADJUSTED PROJECT VEHICLE TRIPS

FIGURE 6-4
PROJECT TRAFFIC VOLUMES

WEEKDAY AM, MID-DAY, AND PM PEAK HOURS
ALTERNATIVE ROUTE 4

PACOIMA SPREADING GROUNDS IMPROVEMENT PROJECT

LINSCOTT, LAW & GREENSPAN, engineers

o:\job_file\4056-2\dwg\f6-4.dwg LDP 14:12:57 07/02/2015 rodriguez

7.0 FUTURE DEVELOPMENT

The forecast of future conditions was prepared in accordance with procedures outlined in Section 15130 of the California Environmental Quality Act (CEQA) Guidelines. Specifically, the CEQA Guidelines provides two options for developing the future traffic volume forecast:

> "(A) A list of past, present, and probable future projects producing related or cumulative impacts, including, if necessary, those projects outside the control of the [lead] agency, or
>
> (B) A summary of projections contained in an adopted local, regional or statewide plan, or related planning document, that describes or evaluates conditions contributing to the cumulative effect. Such plans may include: a general plan, regional transportation plan, or plans for the reduction of greenhouse gas emissions. A summary of projections may also be contained in an adopted or certified prior environmental document for such a plan. Such projections may be supplemented with additional information such as a regional modeling program. Any such document shall be referenced and made available to the public at a location specified by the lead agency."

Accordingly, the traffic analysis using the City of Los Angeles methodology provides a highly conservative estimate of future traffic volumes as it incorporates both the "A" and "B" options outlined in CEQA Guidelines for purposes of developing the forecast. This has been confirmed with City staff prior to commencement of the traffic analysis.

7.1 Related Projects

A forecast of on-street traffic conditions was prepared by incorporating the potential trips associated with other known development projects (related projects) in the area. With this information, the potential impact of the proposed project can be evaluated within the context of the cumulative impact of all ongoing development. The related projects research was based on information on file at both the County of Los Angeles Department of Regional Planning and the City of Los Angeles Departments of Planning and Transportation, as well as the LACFCD to determine any projects with overlapping haul routes and schedules. The list of related projects in the project study area is presented in ***Table 7-1***. The location of the related projects is shown in ***Figure 7-1***.

As shown in *Table 7-1*, the Lopez Spreading Grounds Improvement Project is included as a related project. Other spreading grounds improvement and sediment removal projects have been considered but are not included in *Table 7-1* because they either; 1) do not have any haul route overlaps with the proposed project, 2) they are forecast to begin only after the completion of the proposed project, or 3) they propose to use conveyor belts only for the transport of materials (i.e., no trucks).

Table 7-1
RELATED PROJECTS LIST AND TRIP GENERATION [1]

MAP NO.	PROJECT STATUS	PROJECT NAME/NUMBER ADDRESS/LOCATION	LAND USE DATA LAND-USE	LAND USE DATA SIZE	DAILY TRIP ENDS [2] VOLUMES	AM PEAK HOUR VOLUMES [2] IN	AM PEAK HOUR VOLUMES [2] OUT	AM PEAK HOUR VOLUMES [2] TOTAL	MID-DAY PEAK HOUR VOLUMES [2] IN	MID-DAY PEAK HOUR VOLUMES [2] OUT	MID-DAY PEAK HOUR VOLUMES [2] TOTAL	PM PEAK HOUR VOLUMES [2] IN	PM PEAK HOUR VOLUMES [2] OUT	PM PEAK HOUR VOLUMES [2] TOTAL
1	Proposed	Community Recycling & Resource Recovery	Industrial	2,200 GSF	1,534	135	130	265	162	147	309	162	147	309
		9189 De Garmo Avenue												
2	Proposed	Sunland Commercial	Retail	17,000 GSF	760	12	8	20	33	36	69	33	36	69
		8652 Sunland Boulevard	Office	7,000 GSF	173	20	3	23	15	72	87	15	72	87
3	Proposed	Sun Valley Care Ministries	School	140 Seats	1,582	89	48	137	74	103	177	74	103	177
		9000 Sunland Boulevard	School	50 Seats										
			Retail	15,040 GSF										
			Office	17,040 GSF										
			Single-Family Residential	2 DU										
			(Less Existing School)	(40) Seats										
			(Less Existing Single-Family)	(2) DU										
			(Less Existing Retail)	(3,632) GSF										
			(Less Existing Office)	(1,604) GSF										
4	Proposed	Hotel Pacoima	Hotel	44 Rooms	359	15	10	25	14	12	26	14	12	26
		13535 Van Nuys Boulevard												
5	Proposed	Discovery Charter Preparatory School	Private High School	400 Students	1,680	221	147	368	Nom.	Nom.	Nom.	64	104	168
		9989 Laurel Canyon Boulevard												
6	Proposed	Fenton Charter Elementary School	School Expansion	300 Students	1,800	150	125	275	Nom.	Nom.	Nom.	85	95	180
		11351 Dronfield Avenue												
7	Proposed	11038 Peoria Street	TV and Commercial Stages	[1]	914	125	21	146	15	60	75	15	60	75
8	Proposed	St. Ephraim Cathedral [3], [4], [5]	Church	45,998 SF	419	16	10	26	12	13	25	12	13	25
		10635 N. Woodman Avenue	Multi-purpose building											
			Fellowship Hall/Administration											
			Senior Housing	28 DU	96	2	4	6	4	3	7	4	3	7
			Bishops Residences	2 DU	19	1	1	2	1	1	2	1	1	2
9	Proposed	Lopez Spreading Grounds Improvement Project [6]	Sediment Removal	240,000 CY	810	34	34	68	34	34	68	34	34	68
	TOTAL				10,146	820	541	1,361	364	481	845	513	680	1,193

[1] Source: City of Los Angeles Department of Transportation (LADOT), except as noted below. The peak hour traffic volumes were forecast based on trip data provided by LADOT and by applying trip rates as provided in the ITE "Trip Generation Manual", 9th Edition, 2012. For those related projects that LADOT provided trip data, the peak hour directional distribution data provided in the ITE "Trip Generation Manual" were utilized.
[2] Trips are one-way traffic movements, entering or leaving.
[3] ITE Land Use Code 560 (Church) trip generation average rates.
[4] ITE Land Use Code 252 (Senior Adult Housing-Attached) trip generation average rates.
[5] ITE Land Use Code 210 (Single Family Detached Housing) trip generation average rates.
[6] Based on information provided by LA County, 135 truck trips per day are anticipated. A passenger car equivalency (PCE) factor of 3.0 was employed for analysis purposes.

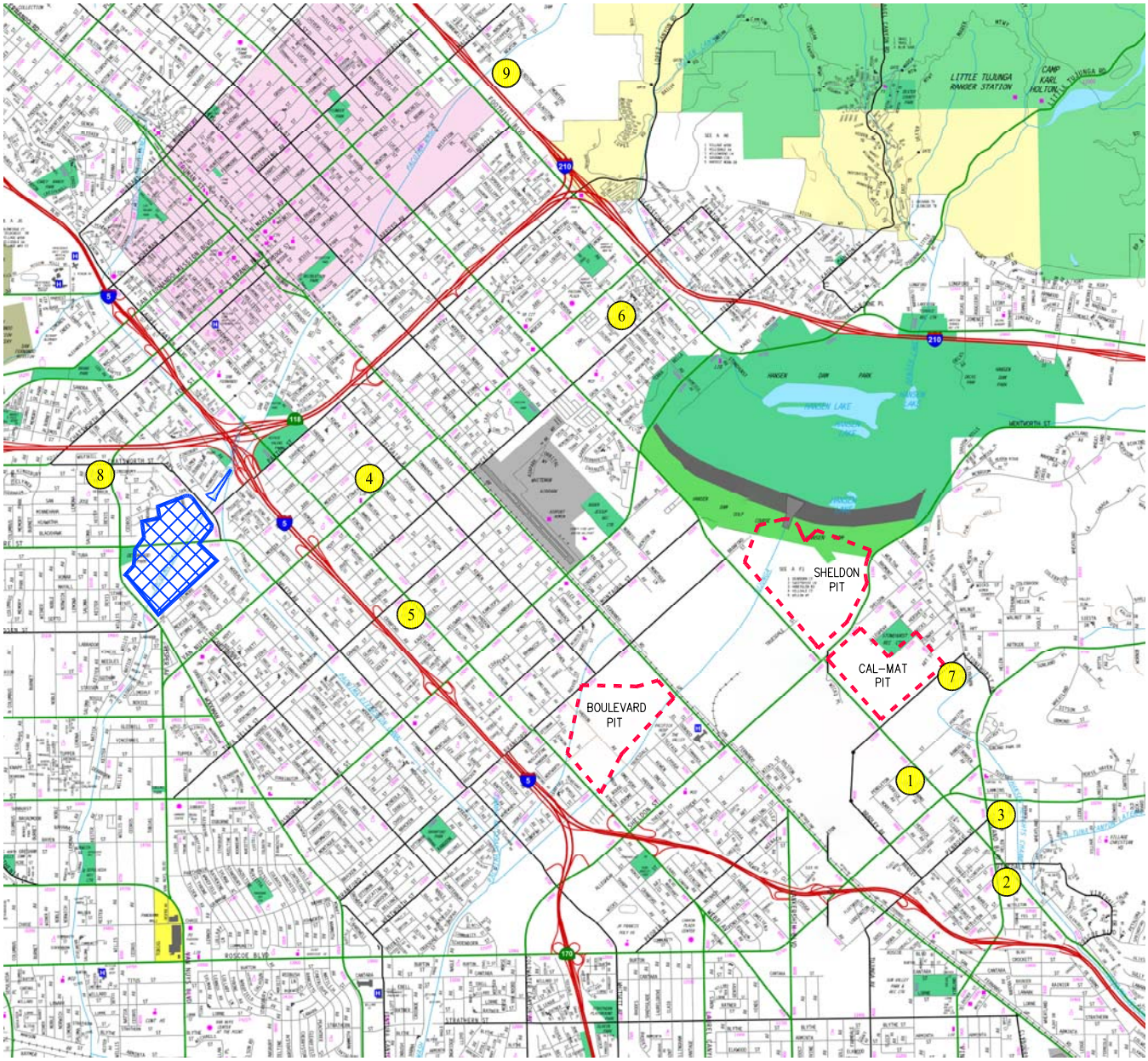

MAP SOURCE: RAND MCNALLY & COMPANY

EXISTING PACOIMA SPREADING GROUNDS

N

NOT TO SCALE

FIGURE 7-1
LOCATION OF RELATED PROJECTS

LINSCOTT, LAW & GREENSPAN, engineers

PACOIMA SPREADING GROUNDS IMPROVEMENT PROJECT

o:\job_file\4056-2\dwg\f7-1.dwg LDP 14:08:58 07/02/2015 rodriquez

Traffic volumes expected to be generated by the related projects were calculated using rates provided in the Institute of Transportation Engineers' (ITE) *Trip Generation Manual*. The related projects' respective traffic generation for the weekday AM peak hour, mid-day peak hour, PM peak hour and weekday daily, is summarized in *Table 7-1*. The traffic analysis accounts for the distribution of the related projects traffic volumes to the study intersections during the weekday AM peak hour, mid-day peak hour, and PM peak hour.

7.2 Ambient Traffic Growth Factor

Horizon year background traffic growth estimates have been calculated using an ambient traffic growth factor. In order to account for area-wide regional growth not included in this analysis, the existing traffic volumes were increased at an annual rate of one and a half percent (1.5%) to the year 2018 (i.e., the anticipated year of project build-out). The ambient growth factor was based on general traffic growth factors provided in the *2010 Congestion Management Program for Los Angeles County* (the "CMP manual") and determined in consultation with LADOT staff. It is noted that based on review of the general traffic growth factors provided in the CMP manual for the project study area (i.e., Regional Statistical Area (RSA) No. 14 – San Fernando, Granada Hills, Sylmar, Tujunga), it is anticipated that the existing traffic volumes are expected to increase at an annual rate of approximately 0.49% per year between the years 2010 and 2018. Thus, application of the 1.5% annual growth factor allows for a conservative, worst case forecast of future traffic volumes in the area. Further, it is noted that the CMP manual's traffic growth rate is intended to anticipate future traffic generated by development projects in the project vicinity. Thus, the inclusion in this traffic analysis of both a forecast of traffic generated by known related projects plus the use of an ambient growth traffic factor based on CMP traffic model data results in a conservative estimate of future traffic volumes at the study intersections.

8.0 TRAFFIC IMPACT ANALYSIS METHODOLOGY

8.1 Intersection Analysis Methodology

All of the 24 study intersections are under either sole City of Los Angeles jurisdiction or joint City of Los Angeles/Caltrans jurisdiction. As such, the study intersections were evaluated using the Critical Movement Analysis (CMA) method of analysis that determines Volume-to-Capacity (*v/c*) ratios on a critical lane basis. The overall intersection *v/c* ratio is subsequently assigned a Level of Service (LOS) value to describe intersection operations. Level of Service varies from LOS A (free flow) to LOS F (jammed condition). A description of the CMA method and corresponding Levels of Service is provided in ***Appendix B***.

In addition, in order to analyze the potential vehicle queuing at the I-5 Freeway On and Off Ramp intersections (which are under joint City of Los Angeles and Caltrans jurisdiction), the methodology outlined in Chapter 19 of the *Highway Capacity Manual 2010* (HCM2010) for the unsignalized intersections has been utilized.

8.2 Intersection Impact Criteria and Thresholds

The relative impact of the added project traffic volumes to be generated by the proposed project during the weekday AM peak hour, mid-day, and PM peak hour was evaluated based on analysis of existing and future operating conditions at the study intersections, without and with the proposed project. The previously discussed capacity analysis procedures were utilized to evaluate the future *v/c* relationships and service level characteristics at each study intersection.

As all study intersections are under either sole City of Los Angeles jurisdiction or joint City of Los Angeles/Caltrans jurisdiction, the significance of the potential project-generated traffic impacts was identified using criteria set forth in LADOT's *Traffic Study Policies and Procedures*. According to the City of Los Angeles' Sliding Scale Method for calculating the level of impact due to traffic generated by the proposed project, a significant transportation impact is determined based on the sliding scale criteria presented in ***Table 8-1***.

Table 8-1
CITY OF LOS ANGELES
INTERSECTION IMPACT THRESHOLD CRITERIA

Final *v/c*	Level of Service	Project Related Increase in *v/c*
> 0.701 - 0.800	C	equal to or greater than 0.040
> 0.801 - 0.900	D	equal to or greater than 0.020
> 0.901 - 1.000	E	equal to or greater than 0.010
Greater than 1.000	F	equal to or greater than 0.010

The City's Sliding Scale Method requires mitigation of project traffic impacts whenever traffic generated by the proposed development causes an increase in the analyzed intersection *v/c* ratio by an amount equal to or greater than the values shown above.

It should be noted that LADOT's impact criteria and thresholds are typically applied to land use development projects with permanent/recurring increases in project traffic volumes. As discussed previously, the proposed construction-related hauling operations are anticipated to last for 18 months. Once the proposed hauling operations are completed, traffic conditions for the surrounding street system are expected to revert back to the pre-project levels. Thus, applying LADOT's criteria to the proposed project is considered a conservative approach.

8.3 Intersection Traffic Impact Analysis Scenarios

Traffic impacts at the study intersections were analyzed for the following conditions pursuant to City of Los Angeles requirements:

[a] Existing conditions.

[b] Condition [a] with the proposed project.

[c] Condition [a] plus 1.5% annual ambient traffic growth through year 2018 and with completion and occupancy of the related projects (i.e., year 2018 cumulative baseline).

[d] Condition [c] with the proposed project.

[e] Condition [d] with implementation of project mitigation measures, where necessary.

The traffic volumes for each new condition were added to the volumes in the prior condition to determine the change in capacity utilization at the study intersections.

9.0 TRAFFIC ANALYSIS

The traffic impact analysis prepared for the study intersections using the CMA methodology and application of the City of Los Angeles significant traffic impact criteria is summarized in ***Tables 9-1, 9-2, 9-3,*** and ***9-4*** for Alternatives 1, 2, 3, and 4, respectively. The corresponding weekday AM, mid-day, and PM peak hours CMA data worksheets are contained in ***Appendix C***.

9.1 Existing Conditions

9.1.1 *Existing Conditions*

As indicated in column [1] of *Tables 9-1, 9-2, 9-3,* and *9-4*, all study intersections are presently operating at LOS D or better during the weekday AM, mid-day, and PM peak hours under existing conditions. The existing conditions CMA data worksheets for the City of Los Angeles study intersections during the weekday AM, mid-day, and PM peak hours are contained in *Appendix C*. The existing traffic volumes at the study intersections during the weekday AM, mid-day, and PM peak hours are displayed in *Figures 5-1*, *5-2*, and *5-3*, respectively.

9.1.2 *Existing With Project Conditions*

As shown in column [2] of *Tables 9-1, 9-2, 9-3,* and *9-4,* application of the City of Los Angeles' threshold criteria to the "Existing With Project" scenario indicates that the proposed project is expected to create a significant temporary traffic impact at the following study intersection for the noted peak hour under Alternative Route 4 conditions:

- <u>Alternative Route 4: Use of Cal-Mat Pit Only</u>

  Intersection No. 14: Glenoaks Boulevard/Sheldon Street (AM peak hour)

Incremental, but not significant, traffic impacts are noted at the study intersections under Alternative Routes 1, 2, and 3 conditions. The existing with project traffic volumes at the study intersections for Alternative Routes 1, 2, 3, and 4 during the weekday AM, mid-day, and PM peak hours are provided in ***Appendix C-1***.

9.2 Year 2018 Conditions

9.2.1 *Year 2018 Cumulative Without Project Conditions*

The year 2018 cumulative without project conditions were forecast based on the addition of traffic generated by the completion and occupancy of the related projects, as well as the growth in traffic due to the combined effects of continuing development, intensification of existing developments and other factors (i.e., ambient growth). The *v/c* ratios at the study intersections are incrementally increased with the addition of ambient traffic and traffic generated by the related projects listed in *Table 7-1*. As presented in column [3] of *Tables 9-1, 9-2, 9-3,* and *9-4*, 23 of the 24 study intersections are expected to operate at LOS D or better during the weekday AM, mid-day, and PM peak hours with the addition of growth in ambient traffic and related projects traffic under the Year 2018 cumulative without project conditions. The Laurel Canyon Boulevard/Paxton Street study intersection is expected to operate at LOS E under the Year 2018

Table 9-1
SUMMARY OF VOLUME TO CAPACITY RATIOS AND LEVELS OF SERVICE
WEEKDAY AM, MID-DAY AND PM PEAK HOURS
ALT 1 Route: Concurrent Use of All Three Disposal Site

NO.	INTERSECTION	PEAK HOUR	[1] YEAR 2015 EXISTING V/C	[1] LOS	[2] YEAR 2015 EXISTING WITH ALT-1 V/C	[2] LOS	[2] CHANGE V/C [(2)-(1)]	[2] SIGNIF. IMPACT	[3] YEAR 2018 FUTURE PRE-PROJECT V/C	[3] LOS	[4] YEAR 2018 FUTURE WITH ALT-1 V/C	[4] LOS	[4] CHANGE V/C [(4)-(3)]	[4] SIGNIF. IMPACT	[5] YEAR 2018 W/ PROJECT MITIGATION V/C	[5] LOS	[5] CHANGE V/C [(5)-(3)]	[5] MITI-GATED
1	Arleta Avenue/	AM	0.563	A	0.611	B	0.048	NO	0.596	A	0.642	B	0.046	NO	0.642	B	0.046	---
	Devonshire Street	Mid-Day	0.232	A	0.268	A	0.036	NO	0.248	A	0.283	A	0.035	NO	0.283	A	0.035	---
		PM	0.497	A	0.539	A	0.042	NO	0.525	A	0.565	A	0.040	NO	0.565	A	0.040	---
2	Arleta Avenue/	AM	0.616	B	0.661	B	0.045	NO	0.646	B	0.691	B	0.045	NO	0.691	B	0.045	---
	Paxton Street	Mid-Day	0.327	A	0.372	A	0.045	NO	0.344	A	0.389	A	0.045	NO	0.389	A	0.045	---
		PM	0.596	A	0.641	B	0.045	NO	0.625	B	0.670	B	0.045	NO	0.670	B	0.045	---
3	I-5 Freeway SB Ramps-Sharp Avenue/	AM	0.654	B	0.688	B	0.034	NO	0.687	B	0.720	C	0.033	NO	0.720	C	0.033	---
	Paxton Street	Mid-Day	0.307	A	0.353	A	0.046	NO	0.324	A	0.370	A	0.046	NO	0.370	A	0.046	---
		PM	0.514	A	0.523	A	0.009	NO	0.543	A	0.552	A	0.009	NO	0.552	A	0.009	---
4	I-5 Freeway NB Ramps-Remick Avenue/	AM	0.581	A	0.589	A	0.008	NO	0.614	B	0.623	B	0.009	NO	0.623	B	0.009	---
	Paxton Street	Mid-Day	0.363	A	0.372	A	0.009	NO	0.383	A	0.392	A	0.009	NO	0.392	A	0.009	---
		PM	0.579	A	0.588	A	0.009	NO	0.610	B	0.618	B	0.008	NO	0.618	B	0.008	---
5	Laurel Canyon Boulevard/	AM	0.788	C	0.788	C	0.000	NO	0.842	D	0.842	D	0.000	NO	0.842	D	0.000	---
	Branford Street	Mid-Day	0.400	A	0.405	A	0.005	NO	0.422	A	0.428	A	0.006	NO	0.428	A	0.006	---
		PM	0.711	C	0.717	C	0.006	NO	0.752	C	0.758	C	0.006	NO	0.758	C	0.006	---
6	San Fernando Road/	AM	0.747	C	0.754	C	0.007	NO	0.789	C	0.796	C	0.007	NO	0.796	C	0.007	---
	Branford Street	Mid-Day	0.507	A	0.517	A	0.010	NO	0.537	A	0.547	A	0.010	NO	0.547	A	0.010	---
		PM	0.632	B	0.641	B	0.009	NO	0.668	B	0.678	B	0.010	NO	0.678	B	0.010	---
7	Laurel Canyon Boulevard/	AM	0.778	C	0.778	C	0.000	NO	0.817	D	0.817	D	0.000	NO	0.817	D	0.000	---
	I-5 Freeway NB Off-Ramp-Jerome Street	Mid-Day	0.341	A	0.341	A	0.000	NO	0.357	A	0.357	A	0.000	NO	0.357	A	0.000	---
		PM	0.654	B	0.661	B	0.007	NO	0.685	B	0.693	B	0.008	NO	0.693	B	0.008	---
8	Laurel Canyon Boulevard/	AM	0.812	D	0.812	D	0.000	NO	0.857	D	0.857	D	0.000	NO	0.857	D	0.000	---
	Sheldon Street	Mid-Day	0.356	A	0.356	A	0.000	NO	0.377	A	0.377	A	0.000	NO	0.377	A	0.000	---
		PM	0.624	B	0.629	B	0.005	NO	0.658	B	0.664	B	0.006	NO	0.664	B	0.006	---
9	Laurel Canyon Boulevard/	AM	0.790	C	0.790	C	0.000	NO	0.831	D	0.831	D	0.000	NO	0.831	D	0.000	---
	I-5 Freeway SB Ramps	Mid-Day	0.475	A	0.475	A	0.000	NO	0.498	A	0.498	A	0.000	NO	0.498	A	0.000	---
		PM	0.805	D	0.813	D	0.008	NO	0.844	D	0.852	D	0.008	NO	0.852	D	0.008	---
10	I-5 Freeway NB On-Ramp-Rincon Avenue/	AM	0.683	B	0.714	C	0.031	NO	0.714	C	0.744	C	0.030	NO	0.744	C	0.030	---
	Sheldon Street	Mid-Day	0.484	A	0.514	A	0.030	NO	0.506	A	0.537	A	0.031	NO	0.537	A	0.031	---
		PM	0.643	B	0.673	B	0.030	NO	0.671	B	0.701	C	0.030	NO	0.701	C	0.030	---

Table 9-1 (Continued)
SUMMARY OF VOLUME TO CAPACITY RATIOS AND LEVELS OF SERVICE
WEEKDAY AM, MID-DAY AND PM PEAK HOURS
ALT 1 Route: Concurrent Use of All Three Disposal Site

NO.	INTERSECTION	PEAK HOUR	[1] YEAR 2015 EXISTING V/C	LOS	[2] YEAR 2015 EXISTING WITH ALT-1 V/C	LOS	CHANGE V/C [(2)-(1)]	SIGNIF. IMPACT	[3] YEAR 2018 FUTURE PRE-PROJECT V/C	LOS	[4] YEAR 2018 FUTURE WITH ALT-1 V/C	LOS	CHANGE V/C [(4)-(3)]	SIGNIF. IMPACT	[5] YEAR 2018 W/ PROJECT MITIGATION V/C	LOS	CHANGE V/C [(5)-(3)]	MITI-GATED
11	Haddon Avenue/	AM	0.466	A	0.476	A	0.010	NO	0.491	A	0.501	A	0.010	NO	0.501	A	0.010	---
	Sheldon Street	Mid-Day	0.174	A	0.184	A	0.010	NO	0.187	A	0.197	A	0.010	NO	0.197	A	0.010	---
		PM	0.340	A	0.345	A	0.005	NO	0.361	A	0.365	A	0.004	NO	0.365	A	0.004	---
12	Telfair Avenue/	AM	0.532	A	0.542	A	0.010	NO	0.560	A	0.570	A	0.010	NO	0.570	A	0.010	---
	Sheldon Street	Mid-Day	0.162	A	0.171	A	0.009	NO	0.173	A	0.183	A	0.010	NO	0.183	A	0.010	---
		PM	0.335	A	0.339	A	0.004	NO	0.353	A	0.358	A	0.005	NO	0.358	A	0.005	---
13	San Fernando Road/	AM	0.737	C	0.752	C	0.015	NO	0.777	C	0.793	C	0.016	NO	0.793	C	0.016	---
	Sheldon Street	Mid-Day	0.411	A	0.419	A	0.008	NO	0.437	A	0.445	A	0.008	NO	0.445	A	0.008	---
		PM	0.656	B	0.664	B	0.008	NO	0.692	B	0.701	C	0.009	NO	0.701	C	0.009	---
14	Glenoaks Boulevard/	AM	0.774	C	0.791	C	0.017	NO	0.833	D	0.849	D	0.016	NO	0.849	D	0.016	---
	Sheldon Street	Mid-Day	0.424	A	0.440	A	0.016	NO	0.464	A	0.481	A	0.017	NO	0.481	A	0.017	---
		PM	0.593	A	0.609	B	0.016	NO	0.641	B	0.658	B	0.017	NO	0.658	B	0.017	---
15	Laurel Canyon Boulevard/	AM	0.788	C	0.795	C	0.007	NO	0.843	D	0.850	D	0.007	NO	0.850	D	0.007	---
	Paxton Street	Mid-Day	0.446	A	0.453	A	0.007	NO	0.471	A	0.478	A	0.007	NO	0.478	A	0.007	---
		PM	0.873	D	0.880	D	0.007	NO	0.923	E	0.930	E	0.007	NO	0.930	E	0.007	---
16	Haddon Avenue/	AM	0.498	A	0.507	A	0.009	NO	0.522	A	0.530	A	0.008	NO	0.530	A	0.008	---
	Paxton Street	Mid-Day	0.283	A	0.292	A	0.009	NO	0.296	A	0.304	A	0.008	NO	0.304	A	0.008	---
		PM	0.563	A	0.571	A	0.008	NO	0.588	A	0.597	A	0.009	NO	0.597	A	0.009	---
17	Kewen Avenue/	AM	0.515	A	0.523	A	0.008	NO	0.538	A	0.547	A	0.009	NO	0.547	A	0.009	---
	Paxton Street	Mid-Day	0.276	A	0.284	A	0.008	NO	0.288	A	0.297	A	0.009	NO	0.297	A	0.009	---
		PM	0.526	A	0.534	A	0.008	NO	0.551	A	0.559	A	0.008	NO	0.559	A	0.008	---
18	Telfair Avenue/	AM	0.386	A	0.393	A	0.007	NO	0.409	A	0.415	A	0.006	NO	0.415	A	0.006	---
	Paxton Street	Mid-Day	0.178	A	0.185	A	0.007	NO	0.191	A	0.197	A	0.006	NO	0.197	A	0.006	---
		PM	0.365	A	0.372	A	0.007	NO	0.387	A	0.393	A	0.006	NO	0.393	A	0.006	---
19	San Fernando Road/	AM	0.841	D	0.841	D	0.000	NO	0.888	D	0.888	D	0.000	NO	0.888	D	0.000	---
	Paxton Street	Mid-Day	0.688	B	0.688	B	0.000	NO	0.728	C	0.728	C	0.000	NO	0.728	C	0.000	---
		PM	0.816	D	0.816	D	0.000	NO	0.864	D	0.864	D	0.000	NO	0.864	D	0.000	---
20	San Fernando Road/	AM	0.543	A	0.549	A	0.006	NO	0.579	A	0.585	A	0.006	NO	0.585	A	0.006	---
	SR-118 Freeway EB Ramps	Mid-Day	0.389	A	0.395	A	0.006	NO	0.413	A	0.420	A	0.007	NO	0.420	A	0.007	---
		PM	0.508	A	0.515	A	0.007	NO	0.539	A	0.546	A	0.007	NO	0.546	A	0.007	---

Table 9-1 (Continued)
SUMMARY OF VOLUME TO CAPACITY RATIOS AND LEVELS OF SERVICE
WEEKDAY AM, MID-DAY AND PM PEAK HOURS
ALT 1 Route: Concurrent Use of All Three Disposal Site

			[1]		[2]				[3]		[4]				[5]			
NO.	INTERSECTION	PEAK HOUR	YEAR 2015 EXISTING V/C	LOS	YEAR 2015 EXISTING WITH ALT-1 V/C	LOS	CHANGE V/C [(2)-(1)]	SIGNIF. IMPACT	YEAR 2018 FUTURE PRE-PROJECT V/C	LOS	YEAR 2018 FUTURE WITH ALT-1 V/C	LOS	CHANGE V/C [(4)-(3)]	SIGNIF. IMPACT	YEAR 2018 W/ PROJECT MITIGATION V/C	LOS	CHANGE V/C [(5)-(3)]	MITI-GATED
21	San Fernando Road/	AM	0.771	C	0.778	C	0.007	NO	0.828	D	0.835	D	0.007	NO	0.835	D	0.007	---
	Van Nuys Boulevard	Mid-Day	0.475	A	0.482	A	0.007	NO	0.504	A	0.512	A	0.008	NO	0.512	A	0.008	---
		PM	0.659	B	0.666	B	0.007	NO	0.704	C	0.711	C	0.007	NO	0.711	C	0.007	---
22	San Fernando Road/	AM	0.794	C	0.801	D	0.007	NO	0.882	D	0.889	D	0.007	NO	0.889	D	0.007	---
	Pierce Street	Mid-Day	0.379	A	0.386	A	0.007	NO	0.404	A	0.411	A	0.007	NO	0.411	A	0.007	---
		PM	0.684	B	0.691	B	0.007	NO	0.755	C	0.763	C	0.008	NO	0.763	C	0.008	---
23	San Fernando Road/	AM	0.573	A	0.580	A	0.007	NO	0.625	B	0.631	B	0.006	NO	0.631	B	0.006	---
	Terra Bella Street	Mid-Day	0.248	A	0.255	A	0.007	NO	0.266	A	0.273	A	0.007	NO	0.273	A	0.007	---
		PM	0.407	A	0.413	A	0.006	NO	0.442	A	0.449	A	0.007	NO	0.449	A	0.007	---
24	San Fernando Road/	AM	0.808	D	0.815	D	0.007	NO	0.861	D	0.869	D	0.008	NO	0.869	D	0.008	---
	Osborne Street	Mid-Day	0.606	B	0.613	B	0.007	NO	0.643	B	0.650	B	0.007	NO	0.650	B	0.007	---
		PM	0.815	D	0.822	D	0.007	NO	0.864	D	0.871	D	0.007	NO	0.871	D	0.007	---

(A) According to LADOT's "Traffic Study Policies and Procedures", August 2014, a transportation impact on an intersection shall be deemed significant in accordance with the following table:

Final v/c	LOS	Project Related Increase in v/c
> 0.700 - 0.800	C	equal to or greater than 0.040
> 0.800 - 0.900	D	equal to or greater than 0.020
> 0.900	E,F	equal to or greater than 0.010

Table 9-2
SUMMARY OF VOLUME TO CAPACITY RATIOS AND LEVELS OF SERVICE
WEEKDAY AM, MID-DAY AND PM PEAK HOURS
ALT 2 Route: Using Only Boulevard Pit

NO.	INTERSECTION	PEAK HOUR	[1] YEAR 2015 EXISTING V/C	LOS	[2] YEAR 2015 EXISTING WITH ALT-2 V/C	LOS	CHANGE V/C [(2)-(1)]	SIGNIF. IMPACT	[3] YEAR 2018 FUTURE PRE-PROJECT V/C	LOS	[4] YEAR 2018 FUTURE WITH ALT-2 V/C	LOS	CHANGE V/C [(4)-(3)]	SIGNIF. IMPACT	[5] YEAR 2018 W/ PROJECT MITIGATION V/C	LOS	CHANGE V/C [(5)-(3)]	MITI-GATED
1	Arleta Avenue/	AM	0.563	A	0.611	B	0.048	NO	0.596	A	0.642	B	0.046	NO	0.642	B	0.046	---
	Devonshire Street	Mid-Day	0.232	A	0.268	A	0.036	NO	0.248	A	0.283	A	0.035	NO	0.283	A	0.035	---
		PM	0.497	A	0.539	A	0.042	NO	0.525	A	0.565	A	0.040	NO	0.565	A	0.040	---
2	Arleta Avenue/	AM	0.616	B	0.661	B	0.045	NO	0.646	B	0.691	B	0.045	NO	0.691	B	0.045	---
	Paxton Street	Mid-Day	0.327	A	0.372	A	0.045	NO	0.344	A	0.389	A	0.045	NO	0.389	A	0.045	---
		PM	0.596	A	0.641	B	0.045	NO	0.625	B	0.670	B	0.045	NO	0.670	B	0.045	---
3	I-5 Freeway SB Ramps-Sharp Avenue/	AM	0.654	B	0.688	B	0.034	NO	0.687	B	0.720	C	0.033	NO	0.720	C	0.033	---
	Paxton Street	Mid-Day	0.307	A	0.353	A	0.046	NO	0.324	A	0.370	A	0.046	NO	0.370	A	0.046	---
		PM	0.514	A	0.523	A	0.009	NO	0.543	A	0.552	A	0.009	NO	0.552	A	0.009	---
4	I-5 Freeway NB Ramps-Remick Avenue/	AM	0.581	A	0.589	A	0.008	NO	0.614	B	0.623	B	0.009	NO	0.623	B	0.009	---
	Paxton Street	Mid-Day	0.363	A	0.372	A	0.009	NO	0.383	A	0.392	A	0.009	NO	0.392	A	0.009	---
		PM	0.579	A	0.588	A	0.009	NO	0.610	B	0.618	B	0.008	NO	0.618	B	0.008	---
5	Laurel Canyon Boulevard/	AM	0.788	C	0.788	C	0.000	NO	0.842	D	0.842	D	0.000	NO	0.842	D	0.000	---
	Branford Street	Mid-Day	0.400	A	0.417	A	0.017	NO	0.422	A	0.440	A	0.018	NO	0.440	A	0.018	---
		PM	0.711	C	0.728	C	0.017	NO	0.752	C	0.769	C	0.017	NO	0.769	C	0.017	---
6	San Fernando Road/	AM	0.747	C	0.754	C	0.007	NO	0.789	C	0.796	C	0.007	NO	0.796	C	0.007	---
	Branford Street	Mid-Day	0.507	A	0.521	A	0.014	NO	0.537	A	0.552	A	0.015	NO	0.552	A	0.015	---
		PM	0.632	B	0.646	B	0.014	NO	0.668	B	0.683	B	0.015	NO	0.683	B	0.015	---
7	Laurel Canyon Boulevard/	AM	0.778	C	0.778	C	0.000	NO	0.817	D	0.817	D	0.000	NO	0.817	D	0.000	---
	I-5 Freeway NB Off-Ramp-Jerome Street	Mid-Day	0.341	A	0.349	A	0.008	NO	0.357	A	0.364	A	0.007	NO	0.364	A	0.007	---
		PM	0.654	B	0.675	B	0.021	NO	0.685	B	0.706	C	0.021	NO	0.706	C	0.021	---
8	Laurel Canyon Boulevard/	AM	0.812	D	0.819	D	0.007	NO	0.857	D	0.863	D	0.006	NO	0.863	D	0.006	---
	Sheldon Street	Mid-Day	0.356	A	0.356	A	0.000	NO	0.377	A	0.377	A	0.000	NO	0.377	A	0.000	---
		PM	0.624	B	0.634	B	0.010	NO	0.658	B	0.668	B	0.010	NO	0.668	B	0.010	---
9	Laurel Canyon Boulevard/	AM	0.790	C	0.790	C	0.000	NO	0.831	D	0.831	D	0.000	NO	0.831	D	0.000	---
	I-5 Freeway SB Ramps	Mid-Day	0.475	A	0.475	A	0.000	NO	0.498	A	0.498	A	0.000	NO	0.498	A	0.000	---
		PM	0.805	D	0.813	D	0.008	NO	0.844	D	0.852	D	0.008	NO	0.852	D	0.008	---
10	I-5 Freeway NB On-Ramp-Rincon Avenue/	AM	0.683	B	0.708	C	0.025	NO	0.714	C	0.739	C	0.025	NO	0.739	C	0.025	---
	Sheldon Street	Mid-Day	0.484	A	0.509	A	0.025	NO	0.506	A	0.531	A	0.025	NO	0.531	A	0.025	---
		PM	0.643	B	0.668	B	0.025	NO	0.671	B	0.696	B	0.025	NO	0.696	B	0.025	---

Table 9-2 (Continued)
SUMMARY OF VOLUME TO CAPACITY RATIOS AND LEVELS OF SERVICE
WEEKDAY AM, MID-DAY AND PM PEAK HOURS
ALT 2 Route: Using Only Boulevard Pit

NO.	INTERSECTION	PEAK HOUR	[1] YEAR 2015 EXISTING V/C	LOS	[2] YEAR 2015 EXISTING WITH ALT-2 V/C	LOS	CHANGE V/C [(2)-(1)]	SIGNIF. IMPACT	[3] YEAR 2018 FUTURE PRE-PROJECT V/C	LOS	[4] YEAR 2018 FUTURE WITH ALT-2 V/C	LOS	CHANGE V/C [(4)-(3)]	SIGNIF. IMPACT	[5] YEAR 2018 W/ PROJECT MITIGATION V/C	LOS	CHANGE V/C [(5)-(3)]	MITI-GATED
11	Haddon Avenue/	AM	0.466	A	0.483	A	0.017	NO	0.491	A	0.508	A	0.017	NO	0.508	A	0.017	---
	Sheldon Street	Mid-Day	0.174	A	0.191	A	0.017	NO	0.187	A	0.203	A	0.016	NO	0.203	A	0.016	---
		PM	0.340	A	0.340	A	0.000	NO	0.361	A	0.361	A	0.000	NO	0.361	A	0.000	---
12	Telfair Avenue/	AM	0.532	A	0.549	A	0.017	NO	0.560	A	0.577	A	0.017	NO	0.577	A	0.017	---
	Sheldon Street	Mid-Day	0.162	A	0.162	A	0.000	NO	0.173	A	0.189	A	0.016	NO	0.189	A	0.016	---
		PM	0.335	A	0.335	A	0.000	NO	0.353	A	0.353	A	0.000	NO	0.353	A	0.000	---
13	San Fernando Road/	AM	0.737	C	0.755	C	0.018	NO	0.777	C	0.795	C	0.018	NO	0.795	C	0.018	---
	Sheldon Street	Mid-Day	0.411	A	0.429	A	0.018	NO	0.437	A	0.455	A	0.018	NO	0.455	A	0.018	---
		PM	0.656	B	0.674	B	0.018	NO	0.692	B	0.710	C	0.018	NO	0.710	C	0.018	---
14	Glenoaks Boulevard/	AM	0.774	C	0.774	C	0.000	NO	0.833	D	0.833	D	0.000	NO	0.833	D	0.000	---
	Sheldon Street	Mid-Day	0.424	A	0.424	A	0.000	NO	0.464	A	0.464	A	0.000	NO	0.464	A	0.000	---
		PM	0.593	A	0.593	A	0.000	NO	0.641	B	0.641	B	0.000	NO	0.641	B	0.000	---
15	Laurel Canyon Boulevard/	AM	0.788	C	0.795	C	0.007	NO	0.843	D	0.850	D	0.007	NO	0.850	D	0.007	---
	Paxton Street	Mid-Day	0.446	A	0.453	A	0.007	NO	0.471	A	0.478	A	0.007	NO	0.478	A	0.007	---
		PM	0.873	D	0.880	D	0.007	NO	0.923	E	0.930	E	0.007	NO	0.930	E	0.007	---
16	Haddon Avenue/	AM	0.498	A	0.507	A	0.009	NO	0.522	A	0.530	A	0.008	NO	0.530	A	0.008	---
	Paxton Street	Mid-Day	0.283	A	0.292	A	0.009	NO	0.296	A	0.304	A	0.008	NO	0.304	A	0.008	---
		PM	0.563	A	0.571	A	0.008	NO	0.588	A	0.597	A	0.009	NO	0.597	A	0.009	---
17	Kewen Avenue/	AM	0.515	A	0.523	A	0.008	NO	0.538	A	0.547	A	0.009	NO	0.547	A	0.009	---
	Paxton Street	Mid-Day	0.276	A	0.284	A	0.008	NO	0.288	A	0.297	A	0.009	NO	0.297	A	0.009	---
		PM	0.526	A	0.534	A	0.008	NO	0.551	A	0.559	A	0.008	NO	0.559	A	0.008	---
18	Telfair Avenue/	AM	0.386	A	0.393	A	0.007	NO	0.409	A	0.415	A	0.006	NO	0.415	A	0.006	---
	Paxton Street	Mid-Day	0.178	A	0.185	A	0.007	NO	0.191	A	0.197	A	0.006	NO	0.197	A	0.006	---
		PM	0.365	A	0.372	A	0.007	NO	0.387	A	0.393	A	0.006	NO	0.393	A	0.006	---
19	San Fernando Road/	AM	0.841	D	0.841	D	0.000	NO	0.888	D	0.888	D	0.000	NO	0.888	D	0.000	---
	Paxton Street	Mid-Day	0.688	B	0.688	B	0.000	NO	0.728	C	0.728	C	0.000	NO	0.728	C	0.000	---
		PM	0.816	D	0.816	D	0.000	NO	0.864	D	0.864	D	0.000	NO	0.864	D	0.000	---
20	San Fernando Road/	AM	0.543	A	0.549	A	0.006	NO	0.579	A	0.585	A	0.006	NO	0.585	A	0.006	---
	SR-118 Freeway EB Ramps	Mid-Day	0.389	A	0.395	A	0.006	NO	0.413	A	0.420	A	0.007	NO	0.420	A	0.007	---
		PM	0.508	A	0.515	A	0.007	NO	0.539	A	0.546	A	0.007	NO	0.546	A	0.007	---

Table 9-2 (Continued)
SUMMARY OF VOLUME TO CAPACITY RATIOS AND LEVELS OF SERVICE
WEEKDAY AM, MID-DAY AND PM PEAK HOURS
ALT 2 Route: Using Only Boulevard Pit

			[1]		[2]				[3]		[4]				[5]			
NO.	INTERSECTION	PEAK HOUR	YEAR 2015 EXISTING V/C	LOS	YEAR 2015 EXISTING WITH ALT-2 V/C	LOS	CHANGE V/C [(2)-(1)]	SIGNIF. IMPACT	YEAR 2018 FUTURE PRE-PROJECT V/C	LOS	YEAR 2018 FUTURE WITH ALT-2 V/C	LOS	CHANGE V/C [(4)-(3)]	SIGNIF. IMPACT	YEAR 2018 W/ PROJECT MITIGATION V/C	LOS	CHANGE V/C [(5)-(3)]	MITI-GATED
21	San Fernando Road/	AM	0.771	C	0.778	C	0.007	NO	0.828	D	0.835	D	0.007	NO	0.835	D	0.007	---
	Van Nuys Boulevard	Mid-Day	0.475	A	0.482	A	0.007	NO	0.504	A	0.512	A	0.008	NO	0.512	A	0.008	---
		PM	0.659	B	0.666	B	0.007	NO	0.704	C	0.711	C	0.007	NO	0.711	C	0.007	---
22	San Fernando Road/	AM	0.794	C	0.801	D	0.007	NO	0.882	D	0.889	D	0.007	NO	0.889	D	0.007	---
	Pierce Street	Mid-Day	0.379	A	0.386	A	0.007	NO	0.404	A	0.411	A	0.007	NO	0.411	A	0.007	---
		PM	0.684	B	0.691	B	0.007	NO	0.755	C	0.763	C	0.008	NO	0.763	C	0.008	---
23	San Fernando Road/	AM	0.573	A	0.580	A	0.007	NO	0.625	B	0.631	B	0.006	NO	0.631	B	0.006	---
	Terra Bella Street	Mid-Day	0.248	A	0.255	A	0.007	NO	0.266	A	0.273	A	0.007	NO	0.273	A	0.007	---
		PM	0.407	A	0.413	A	0.006	NO	0.442	A	0.449	A	0.007	NO	0.449	A	0.007	---
24	San Fernando Road/	AM	0.808	D	0.815	D	0.007	NO	0.861	D	0.869	D	0.008	NO	0.869	D	0.008	---
	Osborne Street	Mid-Day	0.606	B	0.613	B	0.007	NO	0.643	B	0.650	B	0.007	NO	0.650	B	0.007	---
		PM	0.815	D	0.822	D	0.007	NO	0.864	D	0.871	D	0.007	NO	0.871	D	0.007	---

(A) According to LADOT's "Traffic Study Policies and Procedures", August 2014, a transportation impact on an intersection shall be deemed significant in accordance with the following table:

Final v/c	LOS	Project Related Increase in v/c
> 0.700 - 0.800	C	equal to or greater than 0.040
> 0.800 - 0.900	D	equal to or greater than 0.020
> 0.900	E,F	equal to or greater than 0.010

Table 9-3
SUMMARY OF VOLUME TO CAPACITY RATIOS AND LEVELS OF SERVICE
WEEKDAY AM, MID-DAY AND PM PEAK HOURS
ALT 3 Route: Using Only Sheldon Pit

NO.	INTERSECTION	PEAK HOUR	[1] YEAR 2015 EXISTING V/C	[1] LOS	[2] YEAR 2015 EXISTING WITH ALT-3 V/C	[2] LOS	[2] CHANGE V/C [(2)-(1)]	[2] SIGNIF. IMPACT	[3] YEAR 2018 FUTURE PRE-PROJECT V/C	[3] LOS	[4] YEAR 2018 FUTURE WITH ALT-3 V/C	[4] LOS	[4] CHANGE V/C [(4)-(3)]	[4] SIGNIF. IMPACT	[5] YEAR 2018 W/ PROJECT MITIGATION V/C	[5] LOS	[5] CHANGE V/C [(5)-(3)]	[5] MITI-GATED
1	Arleta Avenue/	AM	0.563	A	0.611	B	0.048	NO	0.596	A	0.642	B	0.046	NO	0.642	B	0.046	---
	Devonshire Street	Mid-Day	0.232	A	0.268	A	0.036	NO	0.248	A	0.283	A	0.035	NO	0.283	A	0.035	---
		PM	0.497	A	0.539	A	0.042	NO	0.525	A	0.565	A	0.040	NO	0.565	A	0.040	---
2	Arleta Avenue/	AM	0.616	B	0.661	B	0.045	NO	0.646	B	0.691	B	0.045	NO	0.691	B	0.045	---
	Paxton Street	Mid-Day	0.327	A	0.372	A	0.045	NO	0.344	A	0.389	A	0.045	NO	0.389	A	0.045	---
		PM	0.596	A	0.641	B	0.045	NO	0.625	B	0.670	B	0.045	NO	0.670	B	0.045	---
3	I-5 Freeway SB Ramps-Sharp Avenue/	AM	0.654	B	0.688	B	0.034	NO	0.687	B	0.720	C	0.033	NO	0.720	C	0.033	---
	Paxton Street	Mid-Day	0.307	A	0.353	A	0.046	NO	0.324	A	0.370	A	0.046	NO	0.370	A	0.046	---
		PM	0.514	A	0.523	A	0.009	NO	0.543	A	0.552	A	0.009	NO	0.552	A	0.009	---
4	I-5 Freeway NB Ramps-Remick Avenue/	AM	0.581	A	0.589	A	0.008	NO	0.614	B	0.623	B	0.009	NO	0.623	B	0.009	---
	Paxton Street	Mid-Day	0.363	A	0.372	A	0.009	NO	0.383	A	0.392	A	0.009	NO	0.392	A	0.009	---
		PM	0.579	A	0.588	A	0.009	NO	0.610	B	0.618	B	0.008	NO	0.618	B	0.008	---
5	Laurel Canyon Boulevard/	AM	0.788	C	0.788	C	0.000	NO	0.842	D	0.842	D	0.000	NO	0.842	D	0.000	---
	Branford Street	Mid-Day	0.400	A	0.400	A	0.000	NO	0.422	A	0.422	A	0.000	NO	0.422	A	0.000	---
		PM	0.711	C	0.711	C	0.000	NO	0.752	C	0.752	C	0.000	NO	0.752	C	0.000	---
6	San Fernando Road/	AM	0.747	C	0.754	C	0.007	NO	0.789	C	0.796	C	0.007	NO	0.796	C	0.007	---
	Branford Street	Mid-Day	0.507	A	0.514	A	0.007	NO	0.537	A	0.544	A	0.007	NO	0.544	A	0.007	---
		PM	0.632	B	0.639	B	0.007	NO	0.668	B	0.675	B	0.007	NO	0.675	B	0.007	---
7	Laurel Canyon Boulevard/	AM	0.778	C	0.778	C	0.000	NO	0.817	D	0.817	D	0.000	NO	0.817	D	0.000	---
	I-5 Freeway NB Off-Ramp-Jerome Street	Mid-Day	0.341	A	0.341	A	0.000	NO	0.357	A	0.357	A	0.000	NO	0.357	A	0.000	---
		PM	0.654	B	0.654	B	0.000	NO	0.685	B	0.685	B	0.000	NO	0.685	B	0.000	---
8	Laurel Canyon Boulevard/	AM	0.812	D	0.812	D	0.000	NO	0.857	D	0.857	D	0.000	NO	0.857	D	0.000	---
	Sheldon Street	Mid-Day	0.356	A	0.366	A	0.010	NO	0.377	A	0.386	A	0.009	NO	0.386	A	0.009	---
		PM	0.624	B	0.624	B	0.000	NO	0.658	B	0.658	B	0.000	NO	0.658	B	0.000	---
9	Laurel Canyon Boulevard/	AM	0.790	C	0.790	C	0.000	NO	0.831	D	0.831	D	0.000	NO	0.831	D	0.000	---
	I-5 Freeway SB Ramps	Mid-Day	0.475	A	0.475	A	0.000	NO	0.498	A	0.498	A	0.000	NO	0.498	A	0.000	---
		PM	0.805	D	0.813	D	0.008	NO	0.844	D	0.852	D	0.008	NO	0.852	D	0.008	---
10	I-5 Freeway NB On-Ramp-Rincon Avenue/	AM	0.683	B	0.721	C	0.038	NO	0.714	C	0.752	C	0.038	NO	0.752	C	0.038	---
	Sheldon Street	Mid-Day	0.484	A	0.522	A	0.038	NO	0.506	A	0.543	A	0.037	NO	0.543	A	0.037	---
		PM	0.643	B	0.680	B	0.037	NO	0.671	B	0.708	C	0.037	NO	0.708	C	0.037	---

Table 9-3 (Continued)
SUMMARY OF VOLUME TO CAPACITY RATIOS AND LEVELS OF SERVICE
WEEKDAY AM, MID-DAY AND PM PEAK HOURS
ALT 3 Route: Using Only Sheldon Pit

NO.	INTERSECTION	PEAK HOUR	[1] YEAR 2015 EXISTING V/C	LOS	[2] YEAR 2015 EXISTING WITH ALT-3 V/C	LOS	CHANGE V/C [(2)-(1)]	SIGNIF. IMPACT	[3] YEAR 2018 FUTURE PRE-PROJECT V/C	LOS	[4] YEAR 2018 FUTURE WITH ALT-3 V/C	LOS	CHANGE V/C [(4)-(3)]	SIGNIF. IMPACT	[5] YEAR 2018 W/ PROJECT MITIGATION V/C	LOS	CHANGE V/C [(5)-(3)]	MITI-GATED
11	Haddon Avenue/	AM	0.466	A	0.476	A	0.010	NO	0.491	A	0.501	A	0.010	NO	0.501	A	0.010	---
	Sheldon Street	Mid-Day	0.174	A	0.184	A	0.010	NO	0.187	A	0.197	A	0.010	NO	0.197	A	0.010	---
		PM	0.340	A	0.350	A	0.010	NO	0.361	A	0.371	A	0.010	NO	0.371	A	0.010	---
12	Telfair Avenue/	AM	0.532	A	0.542	A	0.010	NO	0.560	A	0.570	A	0.010	NO	0.570	A	0.010	---
	Sheldon Street	Mid-Day	0.162	A	0.172	A	0.010	NO	0.173	A	0.183	A	0.010	NO	0.183	A	0.010	---
		PM	0.335	A	0.345	A	0.010	NO	0.353	A	0.363	A	0.010	NO	0.363	A	0.010	---
13	San Fernando Road/	AM	0.737	C	0.757	C	0.020	NO	0.777	C	0.795	C	0.018	NO	0.795	C	0.018	---
	Sheldon Street	Mid-Day	0.411	A	0.421	A	0.010	NO	0.437	A	0.448	A	0.011	NO	0.448	A	0.011	---
		PM	0.656	B	0.667	B	0.011	NO	0.692	B	0.703	C	0.011	NO	0.703	C	0.011	---
14	Glenoaks Boulevard/	AM	0.774	C	0.791	C	0.017	NO	0.833	D	0.849	D	0.016	NO	0.849	D	0.016	---
	Sheldon Street	Mid-Day	0.424	A	0.441	A	0.017	NO	0.464	A	0.481	A	0.017	NO	0.481	A	0.017	---
		PM	0.593	A	0.609	B	0.016	NO	0.641	B	0.658	B	0.017	NO	0.658	B	0.017	---
15	Laurel Canyon Boulevard/	AM	0.788	C	0.795	C	0.007	NO	0.843	D	0.850	D	0.007	NO	0.850	D	0.007	---
	Paxton Street	Mid-Day	0.446	A	0.453	A	0.007	NO	0.471	A	0.478	A	0.007	NO	0.478	A	0.007	---
		PM	0.873	D	0.880	D	0.007	NO	0.923	E	0.930	E	0.007	NO	0.930	E	0.007	---
16	Haddon Avenue/	AM	0.498	A	0.507	A	0.009	NO	0.522	A	0.530	A	0.008	NO	0.530	A	0.008	---
	Paxton Street	Mid-Day	0.283	A	0.292	A	0.009	NO	0.296	A	0.304	A	0.008	NO	0.304	A	0.008	---
		PM	0.563	A	0.571	A	0.008	NO	0.588	A	0.597	A	0.009	NO	0.597	A	0.009	---
17	Kewen Avenue/	AM	0.515	A	0.523	A	0.008	NO	0.538	A	0.547	A	0.009	NO	0.547	A	0.009	---
	Paxton Street	Mid-Day	0.276	A	0.284	A	0.008	NO	0.288	A	0.297	A	0.009	NO	0.297	A	0.009	---
		PM	0.526	A	0.534	A	0.008	NO	0.551	A	0.559	A	0.008	NO	0.559	A	0.008	---
18	Telfair Avenue/	AM	0.386	A	0.393	A	0.007	NO	0.409	A	0.415	A	0.006	NO	0.415	A	0.006	---
	Paxton Street	Mid-Day	0.178	A	0.185	A	0.007	NO	0.191	A	0.197	A	0.006	NO	0.197	A	0.006	---
		PM	0.365	A	0.372	A	0.007	NO	0.387	A	0.393	A	0.006	NO	0.393	A	0.006	---
19	San Fernando Road/	AM	0.841	D	0.841	D	0.000	NO	0.888	D	0.888	D	0.000	NO	0.888	D	0.000	---
	Paxton Street	Mid-Day	0.688	B	0.688	B	0.000	NO	0.728	C	0.728	C	0.000	NO	0.728	C	0.000	---
		PM	0.816	D	0.816	D	0.000	NO	0.864	D	0.864	D	0.000	NO	0.864	D	0.000	---
20	San Fernando Road/	AM	0.543	A	0.549	A	0.006	NO	0.579	A	0.585	A	0.006	NO	0.585	A	0.006	---
	SR-118 Freeway EB Ramps	Mid-Day	0.389	A	0.395	A	0.006	NO	0.413	A	0.420	A	0.007	NO	0.420	A	0.007	---
		PM	0.508	A	0.515	A	0.007	NO	0.539	A	0.546	A	0.007	NO	0.546	A	0.007	---

Table 9-3 (Continued)
SUMMARY OF VOLUME TO CAPACITY RATIOS AND LEVELS OF SERVICE
WEEKDAY AM, MID-DAY AND PM PEAK HOURS
ALT 3 Route: Using Only Sheldon Pit

NO.	INTERSECTION	PEAK HOUR	[1] YEAR 2015 EXISTING V/C	LOS	[2] YEAR 2015 EXISTING WITH ALT-3 V/C	LOS	CHANGE V/C [(2)-(1)]	SIGNIF. IMPACT	[3] YEAR 2018 FUTURE PRE-PROJECT V/C	LOS	[4] YEAR 2018 FUTURE WITH ALT-3 V/C	LOS	CHANGE V/C [(4)-(3)]	SIGNIF. IMPACT	[5] YEAR 2018 W/ PROJECT MITIGATION V/C	LOS	CHANGE V/C [(5)-(3)]	MITI-GATED
21	San Fernando Road/	AM	0.771	C	0.778	C	0.007	NO	0.828	D	0.835	D	0.007	NO	0.835	D	0.007	---
	Van Nuys Boulevard	Mid-Day	0.475	A	0.482	A	0.007	NO	0.504	A	0.512	A	0.008	NO	0.512	A	0.008	---
		PM	0.659	B	0.666	B	0.007	NO	0.704	C	0.711	C	0.007	NO	0.711	C	0.007	---
22	San Fernando Road/	AM	0.794	C	0.801	D	0.007	NO	0.882	D	0.889	D	0.007	NO	0.889	D	0.007	---
	Pierce Street	Mid-Day	0.379	A	0.386	A	0.007	NO	0.404	A	0.411	A	0.007	NO	0.411	A	0.007	---
		PM	0.684	B	0.691	B	0.007	NO	0.755	C	0.763	C	0.008	NO	0.763	C	0.008	---
23	San Fernando Road/	AM	0.573	A	0.580	A	0.007	NO	0.625	B	0.631	B	0.006	NO	0.631	B	0.006	---
	Terra Bella Street	Mid-Day	0.248	A	0.255	A	0.007	NO	0.266	A	0.273	A	0.007	NO	0.273	A	0.007	---
		PM	0.407	A	0.413	A	0.006	NO	0.442	A	0.449	A	0.007	NO	0.449	A	0.007	---
24	San Fernando Road/	AM	0.808	D	0.815	D	0.007	NO	0.861	D	0.869	D	0.008	NO	0.869	D	0.008	---
	Osborne Street	Mid-Day	0.606	B	0.613	B	0.007	NO	0.643	B	0.650	B	0.007	NO	0.650	B	0.007	---
		PM	0.815	D	0.822	D	0.007	NO	0.864	D	0.871	D	0.007	NO	0.871	D	0.007	---

(A) According to LADOT's "Traffic Study Policies and Procedures", August 2014, a transportation impact on an intersection shall be deemed significant in accordance with the following table:

Final v/c	LOS	Project Related Increase in v/c
> 0.700 - 0.800	C	equal to or greater than 0.040
> 0.800 - 0.900	D	equal to or greater than 0.020
> 0.900	E,F	equal to or greater than 0.010

Table 9-4
SUMMARY OF VOLUME TO CAPACITY RATIOS AND LEVELS OF SERVICE
WEEKDAY AM, MID-DAY AND PM PEAK HOURS
ALT 4 Route: Using Only Cal-Mat Pit

NO.	INTERSECTION	PEAK HOUR	[1] YEAR 2015 EXISTING V/C	LOS	[2] YEAR 2015 EXISTING WITH ALT-4 V/C	LOS	CHANGE V/C [(2)-(1)]	SIGNIF. IMPACT	[3] YEAR 2018 FUTURE PRE-PROJECT V/C	LOS	[4] YEAR 2018 FUTURE WITH ALT-4 V/C	LOS	CHANGE V/C [(4)-(3)]	SIGNIF. IMPACT	[5] YEAR 2018 W/ PROJECT MITIGATION V/C	LOS	CHANGE V/C [(5)-(3)]	MITI-GATED
1	Arleta Avenue/	AM	0.563	A	0.611	B	0.048	NO	0.596	A	0.642	B	0.046	NO	0.642	B	0.046	---
	Devonshire Street	Mid-Day	0.232	A	0.268	A	0.036	NO	0.248	A	0.283	A	0.035	NO	0.283	A	0.035	---
		PM	0.497	A	0.539	A	0.042	NO	0.525	A	0.565	A	0.040	NO	0.565	A	0.040	---
2	Arleta Avenue/	AM	0.616	B	0.661	B	0.045	NO	0.646	B	0.691	B	0.045	NO	0.691	B	0.045	---
	Paxton Street	Mid-Day	0.327	A	0.372	A	0.045	NO	0.344	A	0.389	A	0.045	NO	0.389	A	0.045	---
		PM	0.596	A	0.641	B	0.045	NO	0.625	B	0.670	B	0.045	NO	0.670	B	0.045	---
3	I-5 Freeway SB Ramps-Sharp Avenue/	AM	0.654	B	0.688	B	0.034	NO	0.687	B	0.720	C	0.033	NO	0.720	C	0.033	---
	Paxton Street	Mid-Day	0.307	A	0.353	A	0.046	NO	0.324	A	0.370	A	0.046	NO	0.370	A	0.046	---
		PM	0.514	A	0.523	A	0.009	NO	0.543	A	0.552	A	0.009	NO	0.552	A	0.009	---
4	I-5 Freeway NB Ramps-Remick Avenue/	AM	0.581	A	0.589	A	0.008	NO	0.614	B	0.623	B	0.009	NO	0.623	B	0.009	---
	Paxton Street	Mid-Day	0.363	A	0.372	A	0.009	NO	0.383	A	0.392	A	0.009	NO	0.392	A	0.009	---
		PM	0.579	A	0.588	A	0.009	NO	0.610	B	0.618	B	0.008	NO	0.618	B	0.008	---
5	Laurel Canyon Boulevard/	AM	0.788	C	0.788	C	0.000	NO	0.842	D	0.842	D	0.000	NO	0.842	D	0.000	---
	Branford Street	Mid-Day	0.400	A	0.400	A	0.000	NO	0.422	A	0.422	A	0.000	NO	0.422	A	0.000	---
		PM	0.711	C	0.711	C	0.000	NO	0.752	C	0.752	C	0.000	NO	0.752	C	0.000	---
6	San Fernando Road/	AM	0.747	C	0.754	C	0.007	NO	0.789	C	0.796	C	0.007	NO	0.796	C	0.007	---
	Branford Street	Mid-Day	0.507	A	0.514	A	0.007	NO	0.537	A	0.544	A	0.007	NO	0.544	A	0.007	---
		PM	0.632	B	0.639	B	0.007	NO	0.668	B	0.675	B	0.007	NO	0.675	B	0.007	---
7	Laurel Canyon Boulevard/	AM	0.778	C	0.778	C	0.000	NO	0.817	D	0.817	D	0.000	NO	0.817	D	0.000	---
	I-5 Freeway NB Off-Ramp-Jerome Street	Mid-Day	0.341	A	0.341	A	0.000	NO	0.357	A	0.357	A	0.000	NO	0.357	A	0.000	---
		PM	0.654	B	0.654	B	0.000	NO	0.685	B	0.685	B	0.000	NO	0.685	B	0.000	---
8	Laurel Canyon Boulevard/	AM	0.812	D	0.812	D	0.000	NO	0.857	D	0.857	D	0.000	NO	0.857	D	0.000	---
	Sheldon Street	Mid-Day	0.356	A	0.366	A	0.010	NO	0.377	A	0.386	A	0.009	NO	0.386	A	0.009	---
		PM	0.624	B	0.624	B	0.000	NO	0.658	B	0.658	B	0.000	NO	0.658	B	0.000	---
9	Laurel Canyon Boulevard/	AM	0.790	C	0.790	C	0.000	NO	0.831	D	0.831	D	0.000	NO	0.831	D	0.000	---
	I-5 Freeway SB Ramps	Mid-Day	0.475	A	0.475	A	0.000	NO	0.498	A	0.498	A	0.000	NO	0.498	A	0.000	---
		PM	0.805	D	0.813	D	0.008	NO	0.844	D	0.852	D	0.008	NO	0.852	D	0.008	---
10	I-5 Freeway NB On-Ramp-Rincon Avenue/	AM	0.683	B	0.721	C	0.038	NO	0.714	C	0.752	C	0.038	NO	0.752	C	0.038	---
	Sheldon Street	Mid-Day	0.484	A	0.522	A	0.038	NO	0.506	A	0.543	A	0.037	NO	0.543	A	0.037	---
		PM	0.643	B	0.680	B	0.037	NO	0.671	B	0.708	C	0.037	NO	0.708	C	0.037	---

Table 9-4 (Continued)
SUMMARY OF VOLUME TO CAPACITY RATIOS AND LEVELS OF SERVICE
WEEKDAY AM, MID-DAY AND PM PEAK HOURS
ALT 4 Route: Using Only Cal-Mat Pit

NO.	INTERSECTION	PEAK HOUR	[1] YEAR 2015 EXISTING V/C	LOS	[2] YEAR 2015 EXISTING WITH ALT-4 V/C	LOS	CHANGE V/C [(2)-(1)]	SIGNIF. IMPACT	[3] YEAR 2018 FUTURE PRE-PROJECT V/C	LOS	[4] YEAR 2018 FUTURE WITH ALT-4 V/C	LOS	CHANGE V/C [(4)-(3)]	SIGNIF. IMPACT	[5] YEAR 2018 W/ PROJECT MITIGATION V/C	LOS	CHANGE V/C [(5)-(3)]	MITI-GATED
11	Haddon Avenue/	AM	0.466	A	0.476	A	0.010	NO	0.491	A	0.501	A	0.010	NO	0.501	A	0.010	---
	Sheldon Street	Mid-Day	0.174	A	0.184	A	0.010	NO	0.187	A	0.197	A	0.010	NO	0.197	A	0.010	---
		PM	0.340	A	0.350	A	0.010	NO	0.361	A	0.371	A	0.010	NO	0.371	A	0.010	---
12	Telfair Avenue/	AM	0.532	A	0.542	A	0.010	NO	0.560	A	0.570	A	0.010	NO	0.570	A	0.010	---
	Sheldon Street	Mid-Day	0.162	A	0.172	A	0.010	NO	0.173	A	0.183	A	0.010	NO	0.183	A	0.010	---
		PM	0.335	A	0.345	A	0.010	NO	0.353	A	0.363	A	0.010	NO	0.363	A	0.010	---
13	San Fernando Road/	AM	0.737	C	0.757	C	0.020	NO	0.777	C	0.795	C	0.018	NO	0.795	C	0.018	---
	Sheldon Street	Mid-Day	0.411	A	0.421	A	0.010	NO	0.437	A	0.448	A	0.011	NO	0.448	A	0.011	---
		PM	0.656	B	0.667	B	0.011	NO	0.692	B	0.703	C	0.011	NO	0.703	C	0.011	---
14	Glenoaks Boulevard/	AM	0.774	C	0.807	D	0.033	YES	0.833	D	0.866	D	0.033	YES	0.866	D	0.033	NO
	Sheldon Street	Mid-Day	0.424	A	0.457	A	0.033	NO	0.464	A	0.497	A	0.033	NO	0.497	A	0.033	---
		PM	0.593	A	0.626	B	0.033	NO	0.641	B	0.675	B	0.034	NO	0.675	B	0.034	---
15	Laurel Canyon Boulevard/	AM	0.788	C	0.795	C	0.007	NO	0.843	D	0.850	D	0.007	NO	0.850	D	0.007	---
	Paxton Street	Mid-Day	0.446	A	0.453	A	0.007	NO	0.471	A	0.478	A	0.007	NO	0.478	A	0.007	---
		PM	0.873	D	0.880	D	0.007	NO	0.923	E	0.930	E	0.007	NO	0.930	E	0.007	---
16	Haddon Avenue/	AM	0.498	A	0.507	A	0.009	NO	0.522	A	0.530	A	0.008	NO	0.530	A	0.008	---
	Paxton Street	Mid-Day	0.283	A	0.292	A	0.009	NO	0.296	A	0.304	A	0.008	NO	0.304	A	0.008	---
		PM	0.563	A	0.571	A	0.008	NO	0.588	A	0.597	A	0.009	NO	0.597	A	0.009	---
17	Kewen Avenue/	AM	0.515	A	0.523	A	0.008	NO	0.538	A	0.547	A	0.009	NO	0.547	A	0.009	---
	Paxton Street	Mid-Day	0.276	A	0.284	A	0.008	NO	0.288	A	0.297	A	0.009	NO	0.297	A	0.009	---
		PM	0.526	A	0.534	A	0.008	NO	0.551	A	0.559	A	0.008	NO	0.559	A	0.008	---
18	Telfair Avenue/	AM	0.386	A	0.393	A	0.007	NO	0.409	A	0.415	A	0.006	NO	0.415	A	0.006	---
	Paxton Street	Mid-Day	0.178	A	0.185	A	0.007	NO	0.191	A	0.197	A	0.006	NO	0.197	A	0.006	---
		PM	0.365	A	0.372	A	0.007	NO	0.387	A	0.393	A	0.006	NO	0.393	A	0.006	---
19	San Fernando Road/	AM	0.841	D	0.841	D	0.000	NO	0.888	D	0.888	D	0.000	NO	0.888	D	0.000	---
	Paxton Street	Mid-Day	0.688	B	0.688	B	0.000	NO	0.728	C	0.728	C	0.000	NO	0.728	C	0.000	---
		PM	0.816	D	0.816	D	0.000	NO	0.864	D	0.864	D	0.000	NO	0.864	D	0.000	---
20	San Fernando Road/	AM	0.543	A	0.549	A	0.006	NO	0.579	A	0.585	A	0.006	NO	0.585	A	0.006	---
	SR-118 Freeway EB Ramps	Mid-Day	0.389	A	0.395	A	0.006	NO	0.413	A	0.420	A	0.007	NO	0.420	A	0.007	---
		PM	0.508	A	0.515	A	0.007	NO	0.539	A	0.546	A	0.007	NO	0.546	A	0.007	---

Table 9-4 (Continued)
SUMMARY OF VOLUME TO CAPACITY RATIOS AND LEVELS OF SERVICE
WEEKDAY AM, MID-DAY AND PM PEAK HOURS
ALT 4 Route: Using Only Cal-Mat Pit

NO.	INTERSECTION	PEAK HOUR	[1] YEAR 2015 EXISTING V/C	LOS	[2] YEAR 2015 EXISTING WITH ALT-4 V/C	LOS	CHANGE V/C [(2)-(1)]	SIGNIF. IMPACT	[3] YEAR 2018 FUTURE PRE-PROJECT V/C	LOS	[4] YEAR 2018 FUTURE WITH ALT-4 V/C	LOS	CHANGE V/C [(4)-(3)]	SIGNIF. IMPACT	[5] YEAR 2018 W/ PROJECT MITIGATION V/C	LOS	CHANGE V/C [(5)-(3)]	MITI-GATED
21	San Fernando Road/	AM	0.771	C	0.778	C	0.007	NO	0.828	D	0.835	D	0.007	NO	0.835	D	0.007	---
	Van Nuys Boulevard	Mid-Day	0.475	A	0.482	A	0.007	NO	0.504	A	0.512	A	0.008	NO	0.512	A	0.008	---
		PM	0.659	B	0.666	B	0.007	NO	0.704	C	0.711	C	0.007	NO	0.711	C	0.007	---
22	San Fernando Road/	AM	0.794	C	0.801	D	0.007	NO	0.882	D	0.889	D	0.007	NO	0.889	D	0.007	---
	Pierce Street	Mid-Day	0.379	A	0.386	A	0.007	NO	0.404	A	0.411	A	0.007	NO	0.411	A	0.007	---
		PM	0.684	B	0.691	B	0.007	NO	0.755	C	0.763	C	0.008	NO	0.763	C	0.008	---
23	San Fernando Road/	AM	0.573	A	0.580	A	0.007	NO	0.625	B	0.631	B	0.006	NO	0.631	B	0.006	---
	Terra Bella Street	Mid-Day	0.248	A	0.255	A	0.007	NO	0.266	A	0.273	A	0.007	NO	0.273	A	0.007	---
		PM	0.407	A	0.413	A	0.006	NO	0.442	A	0.449	A	0.007	NO	0.449	A	0.007	---
24	San Fernando Road/	AM	0.808	D	0.815	D	0.007	NO	0.861	D	0.869	D	0.008	NO	0.869	D	0.008	---
	Osborne Street	Mid-Day	0.606	B	0.613	B	0.007	NO	0.643	B	0.650	B	0.007	NO	0.650	B	0.007	---
		PM	0.815	D	0.822	D	0.007	NO	0.864	D	0.871	D	0.007	NO	0.871	D	0.007	---

(A) According to LADOT's "Traffic Study Policies and Procedures", August 2014, a transportation impact on an intersection shall be deemed significant in accordance with the following table:

Final v/c	LOS	Project Related Increase in v/c
> 0.700 - 0.800	C	equal to or greater than 0.040
> 0.800 - 0.900	D	equal to or greater than 0.020
> 0.900	E,F	equal to or greater than 0.010

cumulative without project PM peak hour conditions. The Year 2018 cumulative without project (existing, ambient growth, and related projects) traffic volumes at the study intersections are shown in ***Appendix C-2***.

9.2.2 *Year 2018 Cumulative With Project Conditions*

As shown in column [4] of *Tables 9-1, 9-2, 9-3,* and *9-4,* application of the City of Los Angeles' threshold criteria to the "Year 2018 With Project" scenario indicates that the proposed project is expected to create a significant temporary traffic impact at the following study intersection for the noted peak hour under Alternative Route 4 conditions:

- <u>Alternative Route 4: Use of Cal-Mat Pit Only</u>

  Intersection No. 14: Glenoaks Boulevard/Sheldon Street (AM peak hour)

Incremental, but not significant, traffic impacts are noted at the study intersections with the addition of growth in ambient traffic, related projects traffic, and project traffic under Alternative Routes 1, 2, and 3 conditions. The Year 2018 cumulative with project (existing, ambient growth, related projects and project) traffic volumes at the study intersections for Alternative Routes 1, 2, 3, and 4 during the weekday AM, mid-day, and PM peak hours are shown in ***Appendix C-3***.

10.0 TRANSPORTATION IMPROVEMENT MEASURES

Based on the City of Los Angeles traffic analyses summarized in Section 9.0, it was determined that the proposed project could be expected to result in a significant temporary traffic impact at one intersection in the Year 2018 Cumulative with Alternative Route 4 conditions. Incremental, but not significant, traffic impacts are noted in the Year 2018 Cumulative with Alternative Route 1, Alternative Route 2, and Alternative Route 3 conditions.

Transportation mitigation measures typically consist of improvements such as traffic signal installations/modifications and/or intersection restriping and roadway widening to accommodate additional travel lanes. However, as the project consists of a temporary condition comprised of hauling of removed sediment to one or more sediment disposal sites, no permanent transportation improvement measures are recommended. As such, the following recommendations are noted for consideration so as to minimize to the extent feasible the significant traffic impacts (potential benefits due to these measures are not included/assumed in the level of service calculations):

- Coordinate hauling activities so as to reduce the potential of trucks waiting to unload for protracted periods of time;
- Prohibit parking by construction workers on adjacent streets and directing the construction workers to available parking within the project site.

In addition, it is recommended for LA County consideration that Alternative Route 4 (Use of Cal-Mat Pit Only) be eliminated as a potential haul route. Therefore, if only Alternative Route 1, Alternative Route 2, or Alternative Route 3 are considered for implementation, no significant traffic impacts due to the proposed temporary construction project are expected.

11.0 SUPPLEMENTAL REVIEW OF THE KEWEN AVENUE/PAXTON STREET INTERSECTION

During the Pacoima Spreading Grounds Improvement Project's Initial Study review process, the intersections of Telfair Avenue/Paxton Street, San Fernando Road/Paxton Street, and San Fernando Road/Van Nuys Boulevard along the proposed Haul Route B and the Woodman Avenue/Devonshire Street intersection were requested for analysis of potential traffic impacts. Since haul trucks associated with the proposed project are not expected to traverse through the Woodman Avenue/Devonshire Street intersection, analysis of the Woodman Avenue/Devonshire Street intersection was not deemed necessary. The remaining three requested intersections have been thoroughly evaluated pursuant to the City of Los Angeles' traffic analysis methodologies (refer to Section 9.0). Based on application of the City of Los Angeles significant traffic impact criteria, the proposed project is not expected to create any significant traffic impacts at these intersections.

Since use of the proposed Haul Route B will traverse Paxton Street, a supplemental review has also been conducted at the unsignalized Kewen Avenue/Paxton Street intersection, which is located immediately adjacent to Telfair Elementary School. The Kewen Avenue/Paxton Street intersection is presently a T-intersection controlled by a stop sign facing the northbound Kewen Avenue approach with unrestricted flow on Paxton Street. The methodology outlined in the *Highway Capacity Manual* (HCM) for unsignalized intersections has been utilized to determine the individual movement and approach delays expected to be experienced by motorists traversing through this intersection. A description of the HCM method and corresponding Level of Service is provided in ***Appendix D***. The supplemental intersection analyses for the existing, existing with project, Year 2018 cumulative without project, and Year 2018 cumulative with project conditions are summarized in ***Table 11-1***. The corresponding weekday AM, mid-day, and PM peak hour summary data worksheets of the supplemental intersection analyses are also contained in *Appendix D*.

As shown in *Table 11-1* and the corresponding HCM data worksheets, the reported values represent the worst case (i.e., highest) approach delays and LOS that are expected to occur at the northbound Kewen Avenue approach to the intersection. As the worst case approach of this intersection is forecast to operate at LOS D or better under all analysis conditions, including existing and Year 2018 cumulative with or without the proposed project, delays to motorists traversing through this intersection are not expected to be adversely affected by the project. Additionally, it should be noted that the passenger loading/unloading zones associated with Telfair Elementary School during the morning school drop-off and afternoon pick-up time periods are located along Telfair Avenue and Weidner Street (i.e., not on Paxton Street along the proposed Haul Route B).

Table 11-1
SUPPLEMENTAL INTERSECTION ANALYSIS [a]
WEEKDAY AM, MID-DAY AND PM PEAK HOURS

NO.	INTERSECTION	PEAK HOUR	[1] YEAR 2015 EXISTING DELAY [b]	[1] YEAR 2015 EXISTING LOS [c]	[2] YEAR 2015 EXISTING W/ PROJECT DELAY [b]	[2] YEAR 2015 EXISTING W/ PROJECT LOS [c]	CHANGE IN DELAY [(2)-(1)]	[3] YEAR 2018 CUMULATIVE W/O PROJECT DELAY [b]	[3] YEAR 2018 CUMULATIVE W/O PROJECT LOS [c]	[4] YEAR 2018 CUMULATIVE W/ PROJECT DELAY [b]	[4] YEAR 2018 CUMULATIVE W/ PROJECT LOS [c]	CHANGE IN DELAY [(4)-(3)]
17	Kewen Avenue/Paxton Street [d]	AM	28.3	D	29.5	D	1.2	32.7	D	35.0	D	2.3
		MD	12.0	B	12.2	B	0.2	12.2	B	12.4	B	0.2
		PM	23.1	C	24.0	C	0.9	25.6	D	26.5	D	0.9

[a] Intersection analysis based on the Highway Capacity Manual operational analysis methodologies.
[b] Reported control delay values in seconds per vehicle.
[c] Unsignalized Intersection Levels of Service are based on the following criteria:

Control Delay (s/veh)	LOS
<= 10	A
> 10-15	B
> 15-25	C
> 25-35	D
> 35-50	E
> 50	F

[d] Two-Way Stop-Controlled Intersection. Reported values represent the delays associated with the most constrained approach of the intersection.

12.0 CONGESTION MANAGEMENT PROGRAM TRAFFIC IMPACT ASSESSMENT

The Congestion Management Program (CMP) is a state-mandated program that was enacted by the State Legislature with the passage of Proposition 111 in 1990. The program is intended to address the impact of local growth on the regional transportation system.

As required by the 2010 Congestion Management Program, a Traffic Impact Assessment (TIA) has been prepared to determine the potential impacts on designated monitoring locations on the CMP highway system. The analysis has been prepared in accordance with procedures outlined in the *2010 Congestion Management Program*, Los Angeles County Metropolitan Transportation Authority, October 2010.

12.1 Intersections

There are no CMP intersection monitoring locations within the vicinity of the project. The CMP TIA guidelines require that intersection monitoring locations must be examined if the proposed project will add 50 or more trips during either the AM or PM weekday peak periods. The proposed project will not add 50 or more trips, during the AM or PM peak hours at the CMP monitoring intersections, which is the threshold for preparing a traffic impact assessment, as stated in the CMP manual. Therefore, no further review of potential impacts to intersection monitoring locations that are part of the CMP highway system is required.

12.2 Freeways

The following CMP freeway monitoring location nearest to the project site has been identified:

- <u>CMP Station</u> <u>Location</u>

  Seg. No. 1007 I-5 Freeway near Osborne Street

The CMP TIA guidelines require that freeway monitoring locations must be examined if the proposed project will add 150 or more trips (in either direction) during either the weekday AM or PM peak hours. The proposed project will not add 150 or more trips (in either direction) during either the weekday AM or PM peak hours to the CMP freeway monitoring location, which is the threshold for preparing a traffic impact assessment, as stated in the CMP manual. Therefore, no further review of potential impacts to freeway monitoring locations that are part of the CMP highway system is required.

12.3 Transit Impact Review

As required by the *2010 Congestion Management Program*, a review must be made of CMP transit service. As previously discussed, the project consists of a temporary sediment removal project involving the addition of haul trucks to the surrounding street system. Thus, increased demand on the existing transit service/s provided in the vicinity of the proposed project is not expected. Therefore, no further analysis is warranted as no impacts to future transit services in the project area would occur as a result of the proposed project.

13.0 CALIFORNIA DEPARTMENT OF TRANSPORTATION IMPACT ANALYSIS

A supplemental analysis of Caltrans facilities was prepared based on the latest edition of the Highway Capacity Manual (HCM 2010) operational analysis methodologies pursuant to the California Department of Transportation's (Caltrans) *Guide for the Preparation of Traffic Impact Studies*[4]. Based on recent coordination with Caltrans, analyses of Caltrans facilities should be conducted when and if a proposed project is expected to add 50 or more peak hour trips in either direction on a freeway mainline segment or 10 or more peak hour trips to a freeway ramp location.

13.1 Freeway Mainline Segment Review

The following mainline freeway segments along the I-5 Freeway have been identified for assessment based on their proximity to the project site and the identified haul routes to access each of the three sediment disposal sites:

- I-5 Freeway south of Paxton Street
- I-5 Freeway north of Osborne Street
- I-5 Freeway south of SR-170

As shown in ***Table 13-1***, the proposed project is not expected to generate 50 or more vehicle trips, during either the AM, mid-day, or PM peak hours at any freeway mainline location. Thus, any freeway mainline location would not exceed the threshold for preparation of a Caltrans freeway mainline analysis. Therefore, no further analysis of Caltrans freeway mainline segments is required.

13.2 Ramp Vehicle Queuing Analysis

The proposed project is expected to add 10 or more vehicle trips during the AM, mid-day, and/or PM peak hours to the adjacent freeway ramp locations, which is the threshold for preparation of a Caltrans ramp analysis. Therefore, a detailed review was undertaken with respect to vehicle queuing on the freeway ramp approaches at the study intersections. The queuing analysis was prepared based on the latest edition of the Highway Capacity Manual (HCM 2010) operational analysis methodologies for the Year 2018 cumulative with project (either Alternative Route 3 or 4) conditions. It should be noted that Alternative Routes 3 and 4 are forecast to generate either the same or more project-related vehicle trips at the adjacent freeway ramp intersections than either Alternative Route 1 or Alternative Route 2. Ramp queuing analyses associated with Alternative Routes 3 and 4 thus represent the worst-case conditions. Each of the four freeway ramp intersection approaches were reviewed in terms of expected maximum vehicle queues (i.e., 95th percentile queues) which represent the maximum back of vehicle queues with 95th percentile traffic volumes. The corresponding maximum vehicle queue lengths were then compared with

[4] *Guide for the Preparation of Traffic Impact Studies*, State of California Department of Transportation, December 2002.

Table 13-1
CALTRANS FREEWAY IMPACT ASSESSMENT [1]
FOR ALL ALTERNATIVE ROUTES
WEEKDAY AM, MID-DAY AND PM PEAK HOURS

FREEWAY SEGMENT	PEAK HOUR	DIR	CALTRANS THRESHOLDS FOR ANALYSIS (TRIPS)	PROJECT PCE ADJUSTED TRIP ENDS [2]	ANALYSIS REQUIRED? (YES/NO)
I-5 Freeway south of Paxton Street	AM	NB	50	30	NO
		SB	50	30	NO
	MD	NB	50	30	NO
		SB	50	30	NO
	PM	NB	50	30	NO
		SB	50	30	NO
I-5 Freeway north of Osborne Street	AM	NB	50	30	NO
		SB	50	30	NO
	MD	NB	50	30	NO
		SB	50	30	NO
	PM	NB	50	30	NO
		SB	50	30	NO
I-5 Freeway south of SR-170	AM	NB	50	30	NO
		SB	50	30	NO
	MD	NB	50	30	NO
		SB	50	30	NO
	PM	NB	50	30	NO
		SB	50	30	NO

[1] Freeway assessment per the Caltrans' *Guide for the Preparation of Traffic Impact Studies* , December 2002, and recent coordination with Caltrans.
[2] Based on the project trip generation and trip distribution for the project.

the 85th percentile available ramp storage lengths pursuant to Caltrans recommendation. As presented in ***Table 13-2***, no vehicle queuing back onto the I-5 Freeway mainline is expected, thus, further consideration of temporary transportation improvement measures is therefore not warranted or recommended. In addition, the analysis can be considered conservative as passenger car equivalency factors have be incorporated into the traffic analysis and as such the actual queue lengths are shorter than analyzed here. The corresponding weekday AM, mid-day, and PM peak hour HCM worksheets for purposes of determining the 95th percentile vehicle queues are contained in ***Appendix E***.

Table 13-2
SUMMARY OF POTENTIAL VEHICLE QUEUING [1]
ALTERNATIVE ROUTE 3 AND 4: UTILIZE SHELDON PIT ONLY OR CAL-MAT PIT ONLY
WEEKDAY AM, MID-DAY AND PM PEAK HOURS

RAMP LOCATION	PEAK HOUR	AVAILABLE 85TH PERCENTILE STORAGE [2] (FEET)	YEAR 2018 CUMULATIVE WITH PROJECT CONDITIONS	
			95TH PERCENTILE QUEUE [3] (FEET)	ADEQUATE STORAGE YES/NO
3 I-5 Freeway Southbound Off-Ramp to Paxton Street	AM	1,445	638	YES
	MD	1,445	75	YES
	PM	1,445	352	YES
4 I-5 Freeway Northbound Off-Ramp to Paxton Street	AM	1,675	140	YES
	MD	1,675	55	YES
	PM	1,675	207	YES
9 I-5 Freeway Southbound Off-Ramp to Laurel Canyon Boulevard	AM	960	126	YES
	MD	960	89	YES
	PM	960	253	YES
10 Sheldon Street Westbound Left-Turn onto I-5 Freeway Northbound On-Ramp	AM	150	67	YES
	MD	150	25	YES
	PM	150	33	YES

[1] Intersection queuing analysis based on the Highway Capacity Software (HCS).
[2] Available 85th percentile storage is determined based on the total availabe storage capacity multiplied by 85% so as to allow a 15% safety factor. The availabe storage capacity is based on aerial measurements from Caltrans Earth.
[3] The 95th percentile queue is the maximum back of queue with 95th percentile traffic volumes. An average vehicle length of 25 feet is utilized.

14.0 CONCLUSIONS

This traffic impact study has been prepared to identify and evaluate the potential impacts of traffic generated by the proposed temporary Pacoima Spreading Grounds Improvement project. In order to provide a conservative assessment of potential project-related impacts, this traffic impact study assumes analysis of four alternative haul routes depending upon which of the available sediment disposal sites are being used (including Alternative Route 1 which assumes all three disposal sites are being used concurrently). Completion of the sediment removal operations are anticipated by year 2018.

The proposed temporary project is expected to generate 104 PCE-adjusted net new vehicle trips (52 inbound trips and 52 outbound trips) during the weekday AM, mid-day, and PM peak hours and 1,218 PCE-adjusted daily trip ends during a typical weekday (609 inbound trips and 609 outbound trips).

In order to evaluate the potential impacts to the local street system, 24 intersections were identified for evaluation to determine changes in traffic operations due to the proposed project. Since hauling operation are expected to occur throughout the day the weekday AM, mid-day, and PM peak hour conditions were identified for analysis. All study intersections were evaluated using the City of Los Angeles analysis methodologies and significant traffic impact thresholds.

Based on the results of the traffic analysis, it was determined that the proposed project could be expected to result in a significant temporary traffic impact at one intersection in the Year 2018 Cumulative with Alternative Route 4 conditions. Incremental but less than significant impacts are noted at the study intersections in the Year 2018 Cumulative with Alternative Route 1, Alternative Route 2, and Alternative Route 3 conditions. Since this project is a temporary construction project, formal and permanent transportation improvement measures have not been recommended. However, it is recommended for LA County consideration that Alternative Route 4 (Use of Cal-Mat Pit Only) be eliminated as a potential haul route. Therefore, if only Alternative Route 1, Alternative Route 2, or Alternative Route 3 are considered for implementation, no significant traffic impacts due to the proposed temporary construction project are expected.

The results of the Los Angeles County Congestion Management Program (CMP) traffic assessment indicated that the proposed project will not adversely affect any CMP arterial monitoring intersections or freeway monitoring locations. Therefore, no improvements/mitigation measures are required of this project on the CMP facilities.

The proposed project is not expected to generate 50 or more vehicle trips, during either the AM, mid-day, or PM peak hours, at any freeway mainline locations. Thus, freeway mainline analysis is not required as the threshold for preparation of a Caltrans freeway mainline analysis is not met. However, the proposed project is expected to add 10 or more vehicle trips during the AM, mid-day, and/or PM peak hours to the adjacent freeway ramp locations, which is the threshold for preparation of a Caltrans ramp analysis. Therefore, a detailed review was undertaken with respect to vehicle queuing on the freeway ramp approaches to study intersections. It was

concluded that the currently available 85th percentile storage on each of the affected I-5 Freeway Off-Ramps was more than sufficient to accommodate the projected traffic volumes, therefore no temporary measures are warranted or recommended.

APPENDIX A

TRAFFIC COUNT DATA

- VEHICLE CLASSIFICATION MANUAL TURNING MOVEMENT COUNTS

CITY TRAFFIC COUNTERS

626.991.7522

www.ctcounters.com

File Name : ArletaDev
Site Code : 00000000
Start Date : 1/14/2014
Page No : 1

Groups Printed- Unshifted

	Arleta Ave Southbound			Devonshire St Westbound			Arleta Ave Northbound			Devonshire St Eastbound			
Start Time	Left	Thru	Right	Left	Thru	Right	Left	Thru	Right	Left	Thru	Right	Int. Total
07:00 AM	104	0	57	0	87	52	0	0	0	50	150	0	500
07:15 AM	124	0	103	0	137	51	0	0	0	102	174	0	691
07:30 AM	157	0	87	0	169	77	0	0	0	62	221	0	773
07:45 AM	120	0	101	0	138	61	0	0	0	80	263	0	763
Total	505	0	348	0	531	241	0	0	0	294	808	0	2727
08:00 AM	124	0	72	0	107	45	0	0	0	66	290	0	704
08:15 AM	116	0	81	0	72	28	0	0	0	70	175	0	542
08:30 AM	78	0	61	0	78	27	0	0	0	42	178	0	464
08:45 AM	54	0	67	0	67	28	0	0	0	46	139	0	401
Total	372	0	281	0	324	128	0	0	0	224	782	0	2111
09:00 AM	63	0	46	0	52	19	0	0	0	55	93	0	328
09:15 AM	32	0	28	0	42	26	0	0	0	57	79	0	264
09:30 AM	33	0	34	0	46	30	0	0	0	40	48	0	231
09:45 AM	19	0	26	0	36	20	0	0	0	35	48	0	184
Total	147	0	134	0	176	95	0	0	0	187	268	0	1007
12:00 PM	19	0	46	0	37	40	0	0	0	41	56	0	239
12:15 PM	21	0	43	0	28	40	0	0	0	44	60	0	236
12:30 PM	23	0	41	0	62	34	0	0	0	59	36	0	255
12:45 PM	23	0	40	0	48	30	0	0	0	47	44	0	232
Total	86	0	170	0	175	144	0	0	0	191	196	0	962
01:00 PM	21	0	52	0	73	29	0	0	0	41	53	0	269
01:15 PM	26	0	52	0	97	27	0	0	0	40	61	0	303
01:30 PM	25	0	49	0	61	35	0	0	0	56	64	0	290
01:45 PM	21	0	54	0	46	33	0	0	0	68	97	0	319
Total	93	0	207	0	277	124	0	0	0	205	275	0	1181
03:00 PM	26	0	58	0	87	44	0	0	0	68	71	0	354
03:15 PM	44	0	57	0	69	42	0	0	0	68	78	0	358
03:30 PM	31	0	62	0	93	60	0	0	0	77	81	0	404
03:45 PM	38	0	55	0	81	70	0	0	0	76	99	0	419
Total	139	0	232	0	330	216	0	0	0	289	329	0	1535
04:00 PM	27	0	60	0	93	76	0	0	0	73	84	0	413
04:15 PM	38	0	66	0	83	80	0	0	0	85	84	0	436
04:30 PM	36	0	60	0	100	84	0	0	0	86	106	0	472
04:45 PM	43	0	58	0	118	88	0	0	0	98	118	0	523
Total	144	0	244	0	394	328	0	0	0	342	392	0	1844
05:00 PM	44	0	63	0	105	68	0	0	0	95	104	0	479
05:15 PM	45	0	69	0	107	93	0	0	0	101	142	0	557
05:30 PM	60	0	71	0	80	78	0	0	0	99	106	0	494
05:45 PM	47	0	77	0	98	87	0	0	0	107	93	0	509
Total	196	0	280	0	390	326	0	0	0	402	445	0	2039
Grand Total	1682	0	1896	0	2597	1602	0	0	0	2134	3495	0	13406
Apprch %	47	0	53	0	61.8	38.2	0	0	0	37.9	62.1	0	
Total %	12.5	0	14.1	0	19.4	11.9	0	0	0	15.9	26.1	0	

CITY TRAFFIC COUNTERS

626.991.7522

www.ctcounters.com

File Name : ArletaDev
Site Code : 00000000
Start Date : 1/14/2014
Page No : 2

	Arleta Ave Southbound				Devonshire St Westbound				Arleta Ave Northbound				Devonshire St Eastbound				
Start Time	Left	Thru	Right	App. Total	Left	Thru	Right	App. Total	Left	Thru	Right	App. Total	Left	Thru	Right	App. Total	Int. Total
Peak Hour Analysis From 07:00 AM to 09:45 AM - Peak 1 of 1																	
Peak Hour for Entire Intersection Begins at 07:15 AM																	
07:15 AM	124	0	**103**	227	0	137	51	188	0	0	0	0	**102**	174	0	276	691
07:30 AM	**157**	0	87	**244**	0	**169**	**77**	**246**	0	0	0	0	62	221	0	283	**773**
07:45 AM	120	0	101	221	0	138	61	199	0	0	0	0	80	263	0	343	763
08:00 AM	124	0	72	196	0	107	45	152	0	0	0	0	66	**290**	0	**356**	704
Total Volume	525	0	363	888	0	551	234	785	0	0	0	0	310	948	0	1258	2931
% App. Total	59.1	0	40.9		0	70.2	29.8		0	0	0		24.6	75.4	0		
PHF	.836	.000	.881	.910	.000	.815	.760	.798	.000	.000	.000	.000	.760	.817	.000	.883	.948

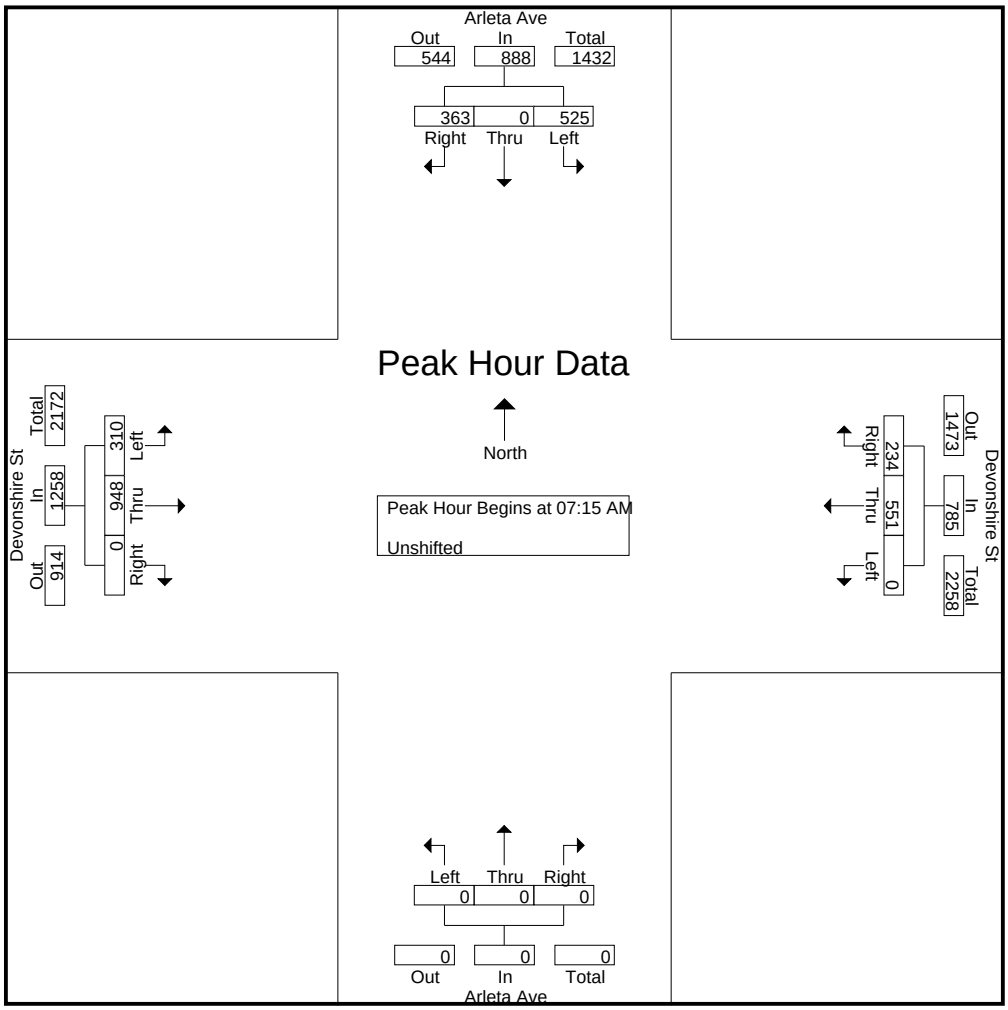

CITY TRAFFIC COUNTERS

626.991.7522

www.ctcounters.com

File Name : ArletaDev
Site Code : 00000000
Start Date : 1/14/2014
Page No : 3

	Arleta Ave Southbound				Devonshire St Westbound				Arleta Ave Northbound				Devonshire St Eastbound				
Start Time	Left	Thru	Right	App. Total	Left	Thru	Right	App. Total	Left	Thru	Right	App. Total	Left	Thru	Right	App. Total	Int. Total
Peak Hour Analysis From 10:00 AM to 01:45 PM - Peak 1 of 1																	
Peak Hour for Entire Intersection Begins at 01:00 PM																	
01:00 PM	21	0	52	73	0	73	29	102	0	0	0	0	41	53	0	94	269
01:15 PM	**26**	0	52	**78**	0	**97**	27	**124**	0	0	0	0	40	61	0	101	303
01:30 PM	25	0	49	74	0	61	**35**	96	0	0	0	0	56	64	0	120	290
01:45 PM	21	0	**54**	75	0	46	33	79	0	0	0	0	**68**	**97**	0	**165**	**319**
Total Volume	93	0	207	300	0	277	124	401	0	0	0	0	205	275	0	480	1181
% App. Total	31	0	69		0	69.1	30.9		0	0	0		42.7	57.3	0		
PHF	.894	.000	.958	.962	.000	.714	.886	.808	.000	.000	.000	.000	.754	.709	.000	.727	.926

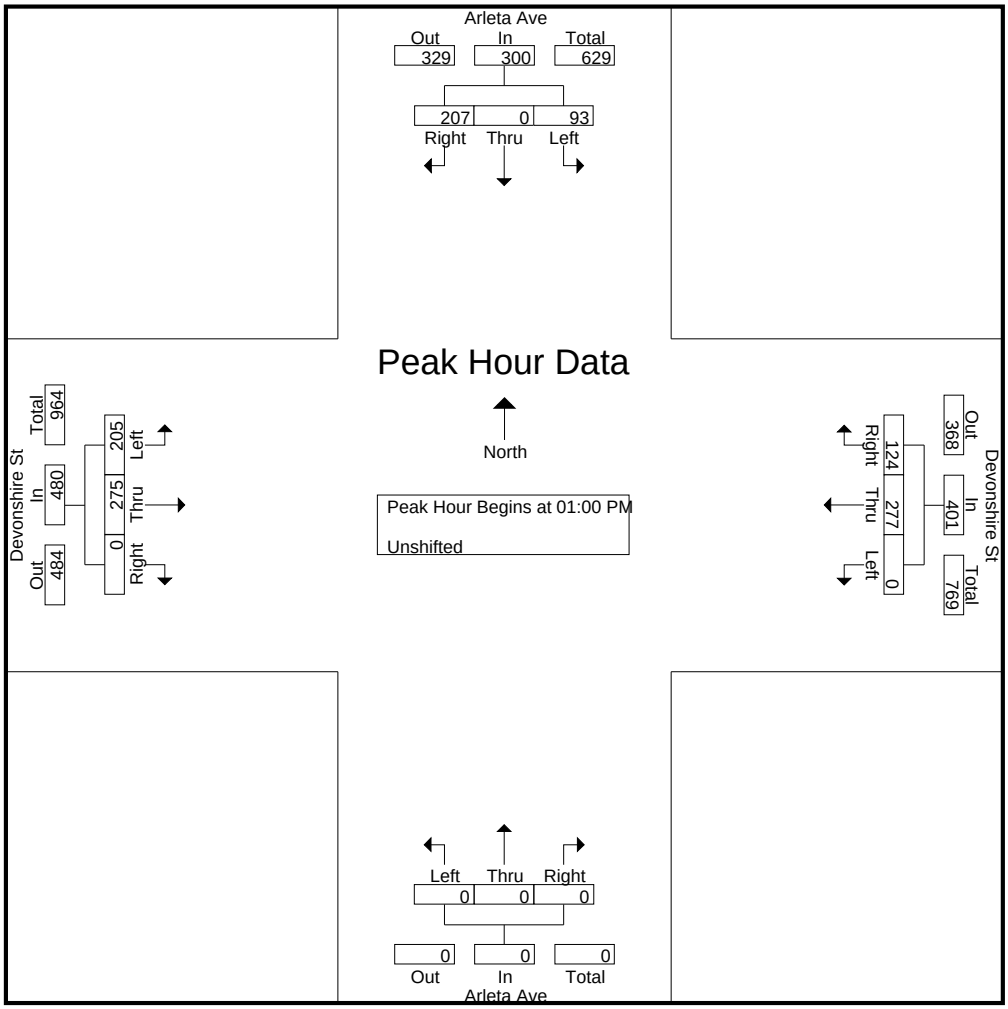

CITY TRAFFIC COUNTERS

626.991.7522

www.ctcounters.com

File Name : ArletaDev
Site Code : 00000000
Start Date : 1/14/2014
Page No : 4

	Arleta Ave Southbound				Devonshire St Westbound				Arleta Ave Northbound				Devonshire St Eastbound				
Start Time	Left	Thru	Right	App. Total	Left	Thru	Right	App. Total	Left	Thru	Right	App. Total	Left	Thru	Right	App. Total	Int. Total
Peak Hour Analysis From 02:00 PM to 05:45 PM - Peak 1 of 1																	
Peak Hour for Entire Intersection Begins at 04:45 PM																	
04:45 PM	43	0	58	101	0	**118**	88	**206**	0	0	0	0	98	118	0	216	523
05:00 PM	44	0	63	107	0	105	68	173	0	0	0	0	95	104	0	199	479
05:15 PM	45	0	69	114	0	107	**93**	200	0	0	0	0	**101**	**142**	0	**243**	**557**
05:30 PM	**60**	0	**71**	**131**	0	80	78	158	0	0	0	0	99	106	0	205	494
Total Volume	192	0	261	453	0	410	327	737	0	0	0	0	393	470	0	863	2053
% App. Total	42.4	0	57.6		0	55.6	44.4		0	0	0		45.5	54.5	0		
PHF	.800	.000	.919	.865	.000	.869	.879	.894	.000	.000	.000	.000	.973	.827	.000	.888	.921

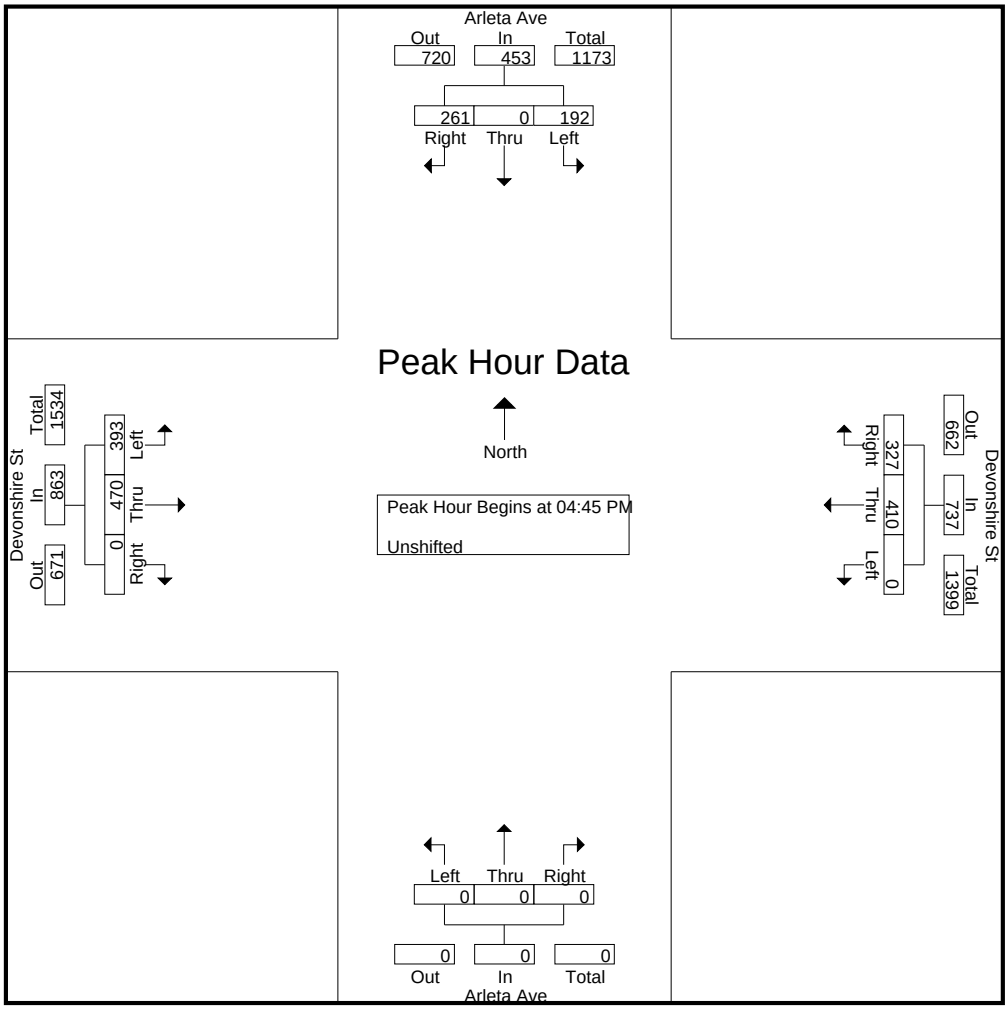

CITY TRAFFIC COUNTERS

626.991.7522

www.ctcounters.com

File Name : ArletaDev_MC
Site Code : 00000000
Start Date : 1/14/2014
Page No : 1

Groups Printed- Bank 1

	Arleta Ave Southbound			Devonshire St Westbound			Arleta Ave Northbound			Devonshire St Eastbound			
Start Time	Left	Thru	Right	Left	Thru	Right	Left	Thru	Right	Left	Thru	Right	Int. Total
07:00 AM	1	0	0	0	0	0	0	0	0	0	0	0	1
07:15 AM	0	0	1	0	0	0	0	0	0	0	0	0	1
07:45 AM	0	0	0	0	0	0	0	0	0	1	0	0	1
Total	1	0	1	0	0	0	0	0	0	1	0	0	3
08:30 AM	0	0	0	0	0	0	0	0	0	0	1	0	1
08:45 AM	0	0	0	0	1	0	0	0	0	0	1	0	2
Total	0	0	0	0	1	0	0	0	0	0	2	0	3
09:45 AM	1	0	0	0	0	0	0	0	0	0	0	0	1
Total	1	0	0	0	0	0	0	0	0	0	0	0	1
12:30 PM	0	0	2	0	0	0	0	0	0	0	0	0	2
Total	0	0	2	0	0	0	0	0	0	0	0	0	2
01:30 PM	0	0	0	0	0	0	0	0	0	0	1	0	1
Total	0	0	0	0	0	0	0	0	0	0	1	0	1
03:30 PM	0	0	0	0	2	0	0	0	0	0	0	0	2
Total	0	0	0	0	2	0	0	0	0	0	0	0	2
04:00 PM	1	0	0	0	1	0	0	0	0	0	0	0	2
04:15 PM	0	0	0	0	1	0	0	0	0	0	0	0	1
04:45 PM	0	0	0	0	0	1	0	0	0	0	0	0	1
Total	1	0	0	0	2	1	0	0	0	0	0	0	4
05:00 PM	0	0	0	0	1	0	0	0	0	0	0	0	1
05:15 PM	0	0	1	0	0	0	0	0	0	1	0	0	2
05:30 PM	1	0	1	0	0	0	0	0	0	0	0	0	2
05:45 PM	0	0	0	0	0	1	0	0	0	0	0	0	1
Total	1	0	2	0	1	1	0	0	0	1	0	0	6
Grand Total	4	0	5	0	6	2	0	0	0	2	3	0	22
Apprch %	44.4	0	55.6	0	75	25	0	0	0	40	60	0	
Total %	18.2	0	22.7	0	27.3	9.1	0	0	0	9.1	13.6	0	

CITY TRAFFIC COUNTERS

626.991.7522

www.ctcounters.com

File Name : ArletaDev_MC
Site Code : 00000000
Start Date : 1/14/2014
Page No : 2

	Arleta Ave Southbound				Devonshire St Westbound				Arleta Ave Northbound				Devonshire St Eastbound				
Start Time	Left	Thru	Right	App. Total	Left	Thru	Right	App. Total	Left	Thru	Right	App. Total	Left	Thru	Right	App. Total	Int. Total
Peak Hour Analysis From 07:00 AM to 09:45 AM - Peak 1 of 1																	
Peak Hour for Entire Intersection Begins at 07:00 AM																	
07:00 AM	**1**	0	0	**1**	0	0	0	0	0	0	0	0	0	0	0	0	**1**
07:15 AM	0	0	**1**	1	0	0	0	0	0	0	0	0	0	0	0	0	1
07:30 AM	0	0	0	0	0	0	0	0	0	0	0	0	0	0	0	0	0
07:45 AM	0	0	0	0	0	0	0	0	0	0	0	0	**1**	0	0	**1**	1
Total Volume	1	0	1	2	0	0	0	0	0	0	0	0	1	0	0	1	3
% App. Total	50	0	50		0	0	0		0	0	0		100	0	0		
PHF	.250	.000	.250	.500	.000	.000	.000	.000	.000	.000	.000	.000	.250	.000	.000	.250	.750

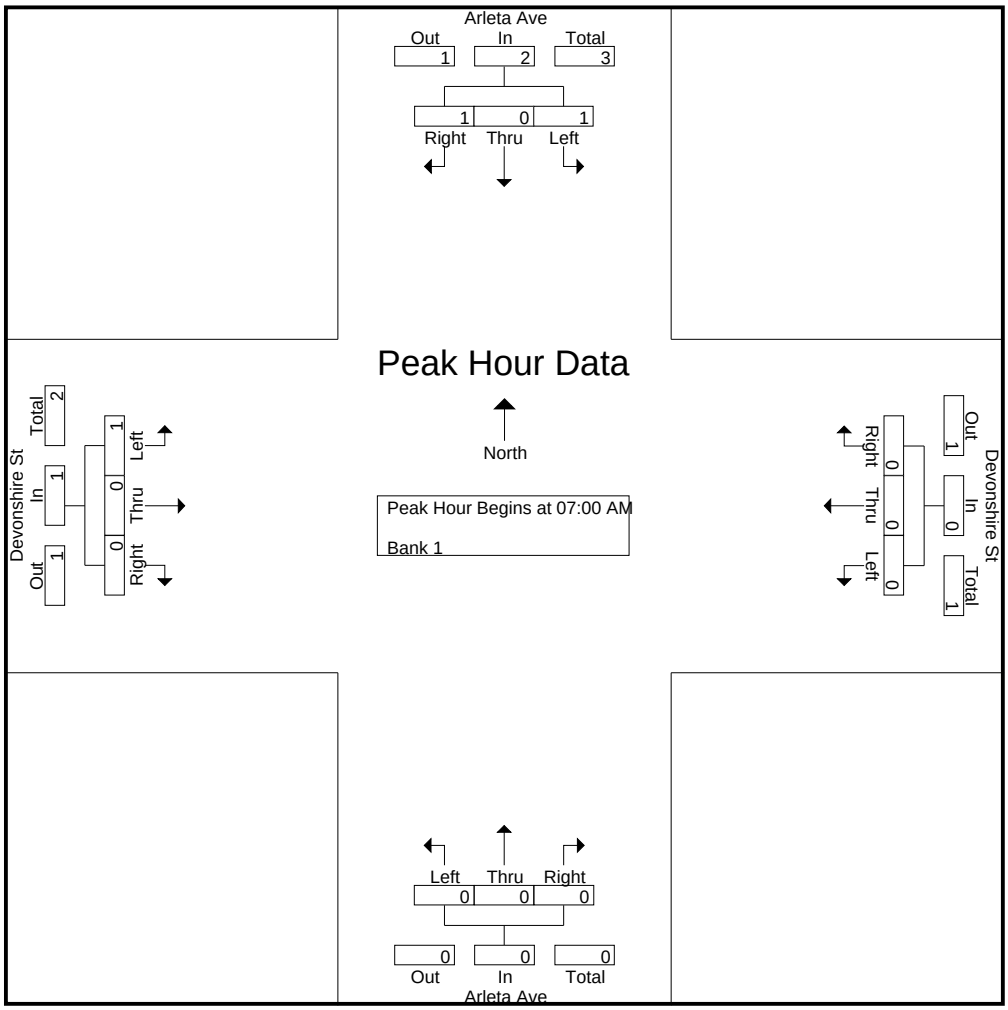

CITY TRAFFIC COUNTERS

626.991.7522

www.ctcounters.com

File Name : ArletaDev_MC
Site Code : 00000000
Start Date : 1/14/2014
Page No : 3

	Arleta Ave Southbound				Devonshire St Westbound				Arleta Ave Northbound				Devonshire St Eastbound				
Start Time	Left	Thru	Right	App. Total	Left	Thru	Right	App. Total	Left	Thru	Right	App. Total	Left	Thru	Right	App. Total	Int. Total
Peak Hour Analysis From 10:00 AM to 01:45 PM - Peak 1 of 1																	
Peak Hour for Entire Intersection Begins at 11:45 AM																	
11:45 AM	0	0	0	0	0	0	0	0	0	0	0	0	0	0	0	0	0
12:00 PM	0	0	0	0	0	0	0	0	0	0	0	0	0	0	0	0	0
12:15 PM	0	0	0	0	0	0	0	0	0	0	0	0	0	0	0	0	0
12:30 PM	0	0	**2**	**2**	0	0	0	0	0	0	0	0	0	0	0	0	**2**
Total Volume	0	0	2	2	0	0	0	0	0	0	0	0	0	0	0	0	2
% App. Total	0	0	100		0	0	0		0	0	0		0	0	0		
PHF	.000	.000	.250	.250	.000	.000	.000	.000	.000	.000	.000	.000	.000	.000	.000	.000	.250

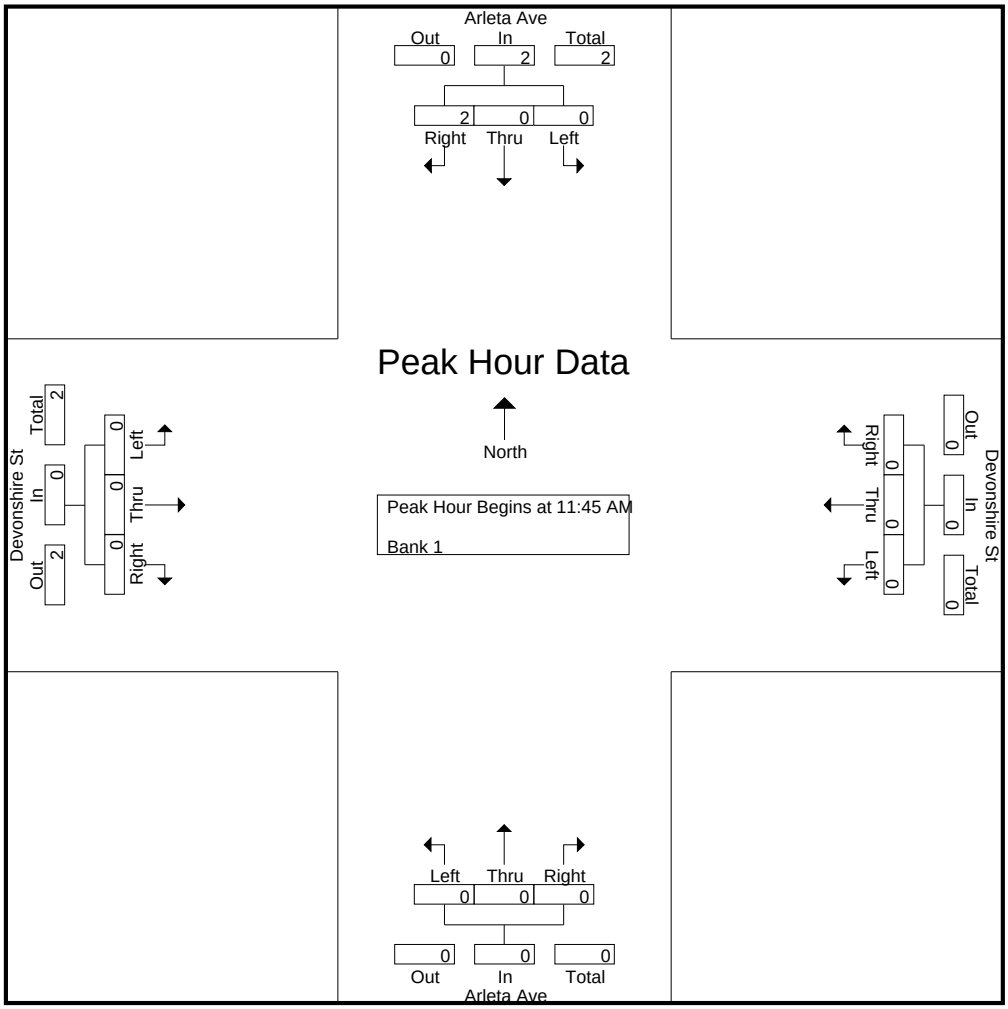

CITY TRAFFIC COUNTERS

626.991.7522

www.ctcounters.com

File Name : ArletaDev_MC
Site Code : 00000000
Start Date : 1/14/2014
Page No : 4

	Arleta Ave Southbound				Devonshire St Westbound				Arleta Ave Northbound				Devonshire St Eastbound				
Start Time	Left	Thru	Right	App. Total	Left	Thru	Right	App. Total	Left	Thru	Right	App. Total	Left	Thru	Right	App. Total	Int. Total
Peak Hour Analysis From 02:00 PM to 05:45 PM - Peak 1 of 1																	
Peak Hour for Entire Intersection Begins at 04:45 PM																	
04:45 PM	0	0	0	0	0	0	**1**	**1**	0	0	0	0	0	0	0	0	1
05:00 PM	0	0	0	0	0	**1**	0	1	0	0	0	0	0	0	0	0	1
05:15 PM	0	0	**1**	1	0	0	0	0	0	0	0	0	**1**	0	0	**1**	**2**
05:30 PM	**1**	0	1	**2**	0	0	0	0	0	0	0	0	0	0	0	0	2
Total Volume	1	0	2	3	0	1	1	2	0	0	0	0	1	0	0	1	6
% App. Total	33.3	0	66.7		0	50	50		0	0	0		100	0	0		
PHF	.250	.000	.500	.375	.000	.250	.250	.500	.000	.000	.000	.000	.250	.000	.000	.250	.750

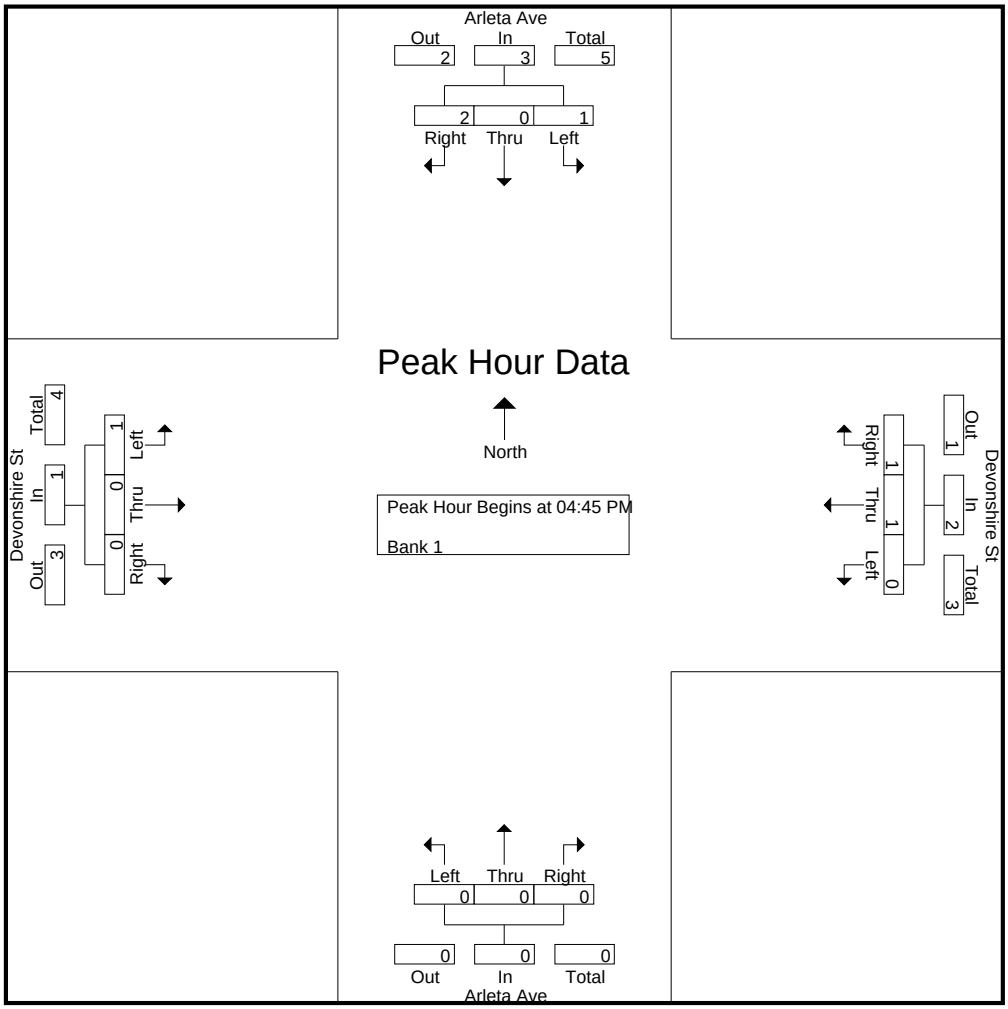

CITY TRAFFIC COUNTERS

626.991.7522

www.ctcounters.com

File Name : ArletaDev_Bus
Site Code : 00000000
Start Date : 1/14/2014
Page No : 1

Groups Printed- Bank 2

	Arleta Ave Southbound			Devonshire St Westbound			Arleta Ave Northbound			Devonshire St Eastbound			
Start Time	Left	Thru	Right	Left	Thru	Right	Left	Thru	Right	Left	Thru	Right	Int. Total
07:00 AM	1	0	1	0	2	2	0	0	0	0	1	0	7
07:15 AM	1	0	1	0	3	0	0	0	0	1	1	0	7
07:30 AM	1	0	1	0	0	0	0	0	0	0	1	0	3
07:45 AM	0	0	0	0	2	1	0	0	0	0	3	0	6
Total	3	0	3	0	7	3	0	0	0	1	6	0	23
08:00 AM	0	0	2	0	1	0	0	0	0	1	1	0	5
08:15 AM	3	0	0	0	0	0	0	0	0	0	2	0	5
08:30 AM	1	0	1	0	0	0	0	0	0	1	2	0	5
08:45 AM	0	0	0	0	0	0	0	0	0	2	0	0	2
Total	4	0	3	0	1	0	0	0	0	4	5	0	17
09:00 AM	0	0	0	0	1	1	0	0	0	4	1	0	7
09:15 AM	0	0	0	0	1	0	0	0	0	5	1	0	7
09:30 AM	0	0	1	0	0	0	0	0	0	1	1	0	3
09:45 AM	0	0	0	0	1	0	0	0	0	1	0	0	2
Total	0	0	1	0	3	1	0	0	0	11	3	0	19
12:15 PM	0	0	1	0	0	0	0	0	0	0	1	0	2
12:30 PM	0	0	1	0	0	0	0	0	0	1	0	0	2
12:45 PM	0	0	1	0	1	1	0	0	0	0	0	0	3
Total	0	0	3	0	1	1	0	0	0	1	1	0	7
01:00 PM	0	0	0	0	2	0	0	0	0	0	0	0	2
01:15 PM	0	0	1	0	0	1	0	0	0	0	1	0	3
01:30 PM	0	0	0	0	0	0	0	0	0	0	1	0	1
01:45 PM	0	0	0	0	1	1	0	0	0	1	3	0	6
Total	0	0	1	0	3	2	0	0	0	1	5	0	12
03:00 PM	1	0	1	0	2	1	0	0	0	2	0	0	7
03:15 PM	1	0	0	0	1	2	0	0	0	2	1	0	7
03:30 PM	0	0	0	0	1	1	0	0	0	3	2	0	7
03:45 PM	0	0	0	0	1	0	0	0	0	2	0	0	3
Total	2	0	1	0	5	4	0	0	0	9	3	0	24
04:00 PM	0	0	0	0	1	1	0	0	0	2	2	0	6
04:15 PM	0	0	0	0	0	1	0	0	0	1	2	0	4
04:30 PM	0	0	0	0	0	1	0	0	0	1	0	0	2
04:45 PM	0	0	0	0	0	0	0	0	0	0	1	0	1
Total	0	0	0	0	1	3	0	0	0	4	5	0	13
05:15 PM	0	0	0	0	1	0	0	0	0	3	0	0	4
05:30 PM	0	0	1	0	1	0	0	0	0	1	2	0	5
Total	0	0	1	0	2	0	0	0	0	4	2	0	9
Grand Total	9	0	13	0	23	14	0	0	0	35	30	0	124
Apprch %	40.9	0	59.1	0	62.2	37.8	0	0	0	53.8	46.2	0	
Total %	7.3	0	10.5	0	18.5	11.3	0	0	0	28.2	24.2	0	

CITY TRAFFIC COUNTERS

626.991.7522

www.ctcounters.com

File Name : ArletaDev_Bus
Site Code : 00000000
Start Date : 1/14/2014
Page No : 2

	Arleta Ave Southbound				Devonshire St Westbound				Arleta Ave Northbound				Devonshire St Eastbound				
Start Time	Left	Thru	Right	App. Total	Left	Thru	Right	App. Total	Left	Thru	Right	App. Total	Left	Thru	Right	App. Total	Int. Total
Peak Hour Analysis From 07:00 AM to 09:45 AM - Peak 1 of 1																	
Peak Hour for Entire Intersection Begins at 07:00 AM																	
07:00 AM	**1**	0	**1**	**2**	0	2	**2**	**4**	0	0	0	0	0	1	0	1	**7**
07:15 AM	1	0	1	2	0	**3**	0	3	0	0	0	0	**1**	1	0	2	7
07:30 AM	1	0	1	2	0	0	0	0	0	0	0	0	0	1	0	1	3
07:45 AM	0	0	0	0	0	2	1	3	0	0	0	0	0	**3**	0	**3**	6
Total Volume	3	0	3	6	0	7	3	10	0	0	0	0	1	6	0	7	23
% App. Total	50	0	50		0	70	30		0	0	0		14.3	85.7	0		
PHF	.750	.000	.750	.750	.000	.583	.375	.625	.000	.000	.000	.000	.250	.500	.000	.583	.821

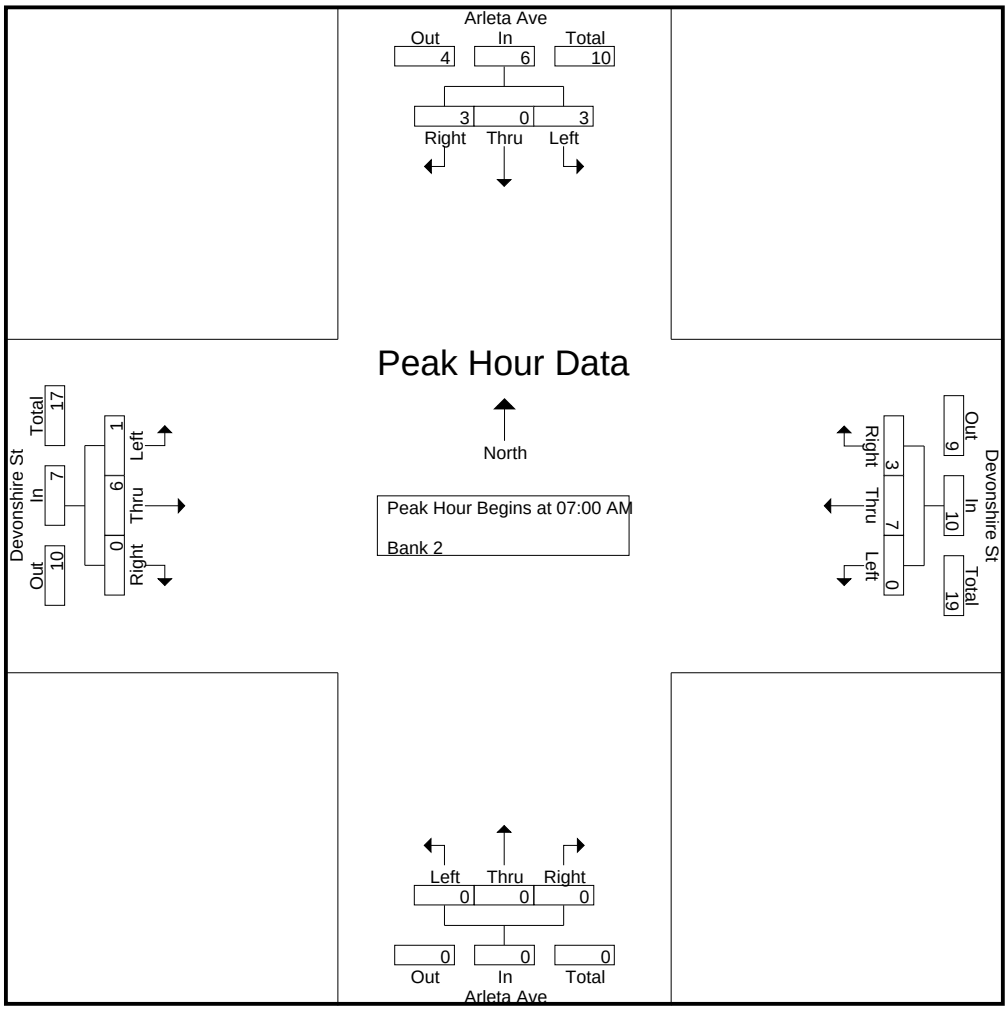

CITY TRAFFIC COUNTERS

626.991.7522

www.ctcounters.com

File Name : ArletaDev_Bus
Site Code : 00000000
Start Date : 1/14/2014
Page No : 3

	Arleta Ave Southbound				Devonshire St Westbound				Arleta Ave Northbound				Devonshire St Eastbound				
Start Time	Left	Thru	Right	App. Total	Left	Thru	Right	App. Total	Left	Thru	Right	App. Total	Left	Thru	Right	App. Total	Int. Total
Peak Hour Analysis From 10:00 AM to 01:45 PM - Peak 1 of 1																	
Peak Hour for Entire Intersection Begins at 01:00 PM																	
01:00 PM	0	0	0	0	0	**2**	0	**2**	0	0	0	0	0	0	0	0	2
01:15 PM	0	0	**1**	**1**	0	0	**1**	1	0	0	0	0	0	1	0	1	3
01:30 PM	0	0	0	0	0	0	0	0	0	0	0	0	0	1	0	1	1
01:45 PM	0	0	0	0	0	1	1	2	0	0	0	0	**1**	**3**	0	**4**	**6**
Total Volume	0	0	1	1	0	3	2	5	0	0	0	0	1	5	0	6	12
% App. Total	0	0	100		0	60	40		0	0	0		16.7	83.3	0		
PHF	.000	.000	.250	.250	.000	.375	.500	.625	.000	.000	.000	.000	.250	.417	.000	.375	.500

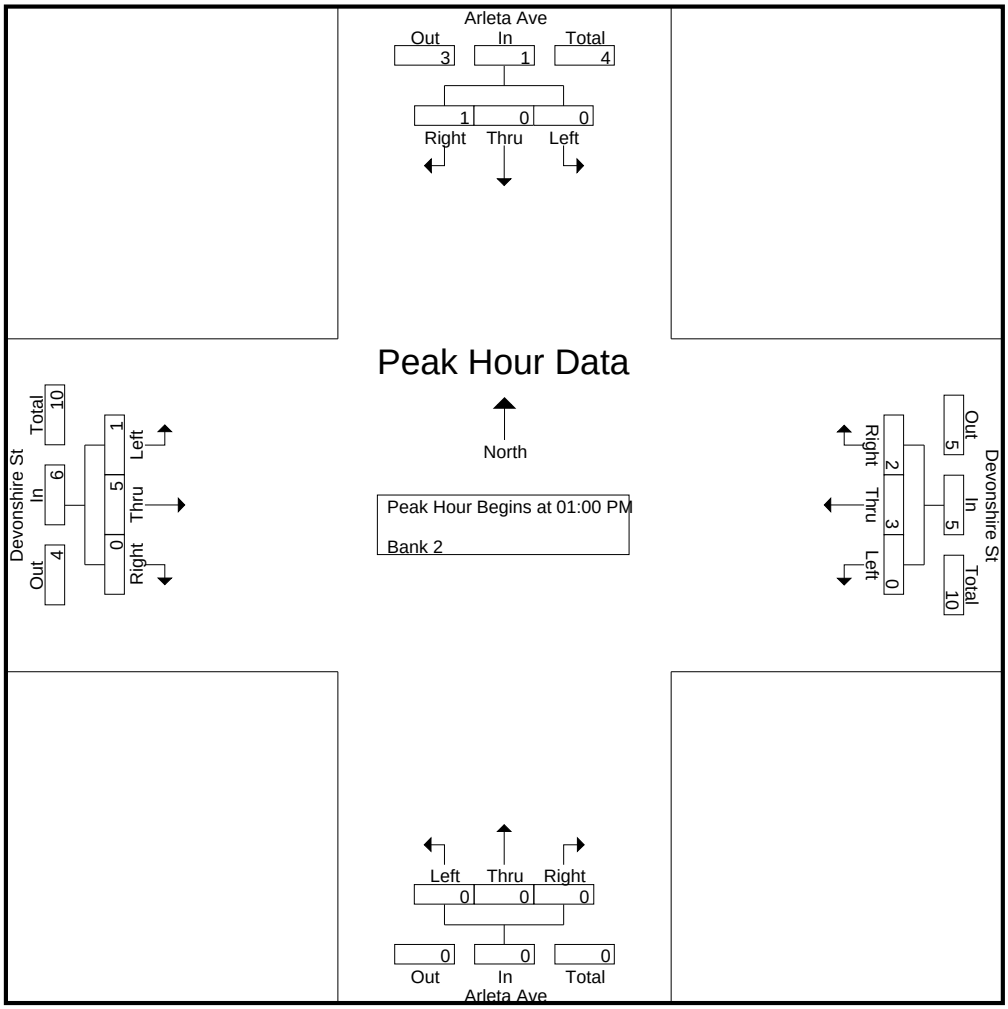

CITY TRAFFIC COUNTERS

626.991.7522

www.ctcounters.com

File Name : ArletaDev_Bus
Site Code : 00000000
Start Date : 1/14/2014
Page No : 4

	Arleta Ave Southbound				Devonshire St Westbound				Arleta Ave Northbound				Devonshire St Eastbound				
Start Time	Left	Thru	Right	App. Total	Left	Thru	Right	App. Total	Left	Thru	Right	App. Total	Left	Thru	Right	App. Total	Int. Total
Peak Hour Analysis From 02:00 PM to 05:45 PM - Peak 1 of 1																	
Peak Hour for Entire Intersection Begins at 03:00 PM																	
03:00 PM	**1**	0	**1**	**2**	0	**2**	1	**3**	0	0	0	0	2	0	0	2	**7**
03:15 PM	1	0	0	1	0	1	**2**	3	0	0	0	0	2	1	0	3	7
03:30 PM	0	0	0	0	0	1	1	2	0	0	0	0	**3**	**2**	0	**5**	7
03:45 PM	0	0	0	0	0	1	0	1	0	0	0	0	2	0	0	2	3
Total Volume	2	0	1	3	0	5	4	9	0	0	0	0	9	3	0	12	24
% App. Total	66.7	0	33.3		0	55.6	44.4		0	0	0		75	25	0		
PHF	.500	.000	.250	.375	.000	.625	.500	.750	.000	.000	.000	.000	.750	.375	.000	.600	.857

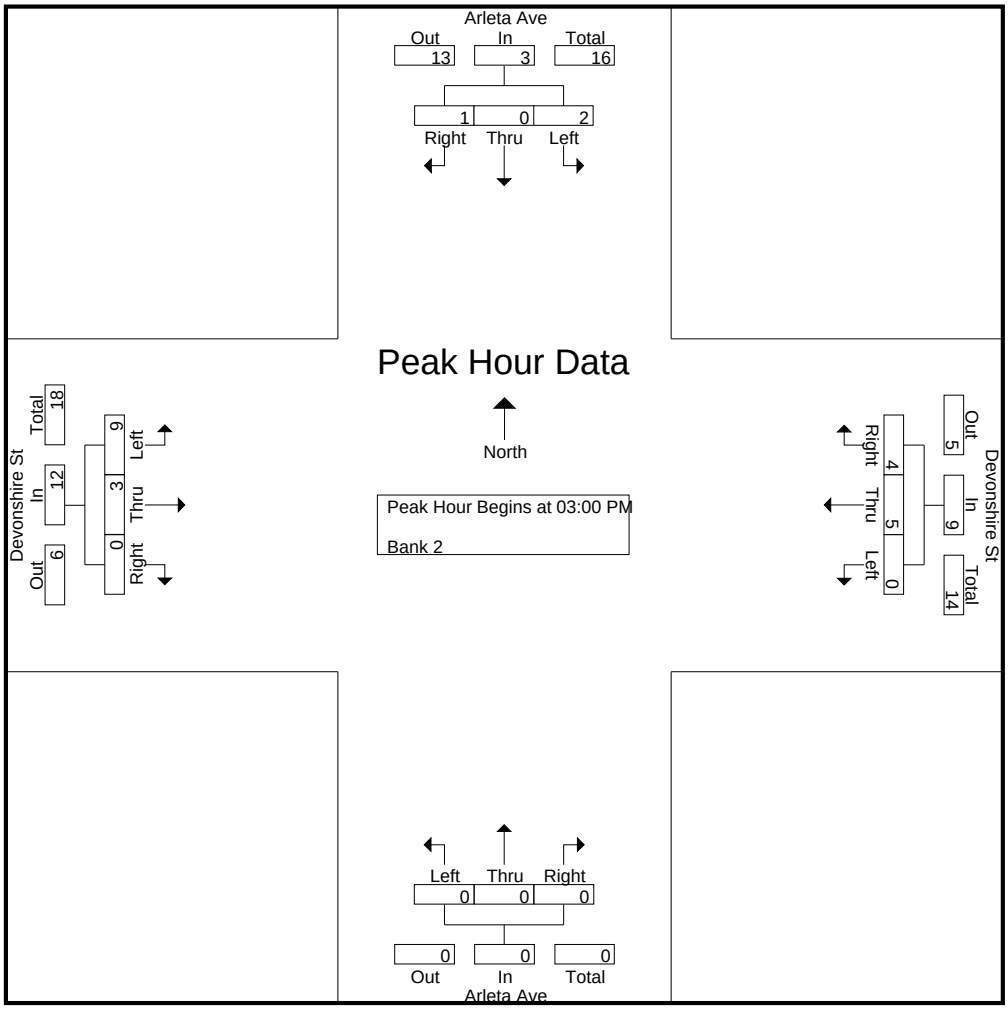

CITY TRAFFIC COUNTERS

626.991.7522

www.ctcounters.com

File Name : ArletaDev_2Axle
Site Code : 00000000
Start Date : 1/14/2014
Page No : 1

Groups Printed- Unshifted

	Arleta Ave Southbound			Devonshire Ave Westbound			Arleta Ave Northbound			Devonshire Ave Eastbound			
Start Time	Left	Thru	Right	Left	Thru	Right	Left	Thru	Right	Left	Thru	Right	Int. Total
07:00 AM	1	0	0	0	0	0	0	0	0	1	3	0	5
07:15 AM	0	0	0	0	1	1	0	0	0	0	0	0	2
07:30 AM	0	0	1	0	1	0	0	0	0	0	0	0	2
07:45 AM	0	0	0	0	0	0	0	0	0	0	2	0	2
Total	1	0	1	0	2	1	0	0	0	1	5	0	11
08:00 AM	0	0	1	0	0	0	0	0	0	1	0	0	2
08:15 AM	1	0	3	0	4	5	0	0	0	1	0	0	14
08:30 AM	4	0	2	0	3	0	0	0	0	0	3	0	12
08:45 AM	0	0	0	0	0	0	0	0	0	0	4	0	4
Total	5	0	6	0	7	5	0	0	0	2	7	0	32
09:00 AM	0	0	1	0	1	1	0	0	0	2	0	0	5
09:15 AM	0	0	0	0	1	1	0	0	0	1	0	0	3
09:30 AM	1	0	0	0	3	1	0	0	0	2	0	0	7
09:45 AM	0	0	1	0	0	0	0	0	0	2	3	0	6
Total	1	0	2	0	5	3	0	0	0	7	3	0	21
12:00 PM	1	0	0	0	2	1	0	0	0	1	1	0	6
12:15 PM	0	0	1	0	1	0	0	0	0	1	0	0	3
12:30 PM	0	0	0	0	0	0	0	0	0	0	1	0	1
12:45 PM	0	0	0	0	1	0	0	0	0	1	1	0	3
Total	1	0	1	0	4	1	0	0	0	3	3	0	13
01:00 PM	0	0	0	0	2	0	0	0	0	0	1	0	3
01:15 PM	0	0	0	0	1	0	0	0	0	2	0	0	3
01:30 PM	0	0	1	0	0	3	0	0	0	1	0	0	5
01:45 PM	0	0	1	0	2	2	0	0	0	2	0	0	7
Total	0	0	2	0	5	5	0	0	0	5	1	0	18
03:00 PM	1	0	1	0	0	0	0	0	0	1	1	0	4
03:15 PM	0	0	2	0	0	1	0	0	0	1	2	0	6
03:30 PM	0	0	0	0	0	0	0	0	0	0	1	0	1
03:45 PM	0	0	0	0	2	1	0	0	0	3	1	0	7
Total	1	0	3	0	2	2	0	0	0	5	5	0	18
04:00 PM	1	0	1	0	1	0	0	0	0	0	0	0	3
04:15 PM	0	0	0	0	0	2	0	0	0	1	0	0	3
04:30 PM	1	0	0	0	1	0	0	0	0	2	2	0	6
04:45 PM	3	0	0	0	2	0	0	0	0	1	1	0	7
Total	5	0	1	0	4	2	0	0	0	4	3	0	19
05:00 PM	1	0	0	0	0	1	0	0	0	2	1	0	5
05:30 PM	0	0	0	0	1	2	0	0	0	1	0	0	4
05:45 PM	1	0	0	0	2	1	0	0	0	1	1	0	6
Total	2	0	0	0	3	4	0	0	0	4	2	0	15
Grand Total	16	0	16	0	32	23	0	0	0	31	29	0	147
Apprch %	50	0	50	0	58.2	41.8	0	0	0	51.7	48.3	0	
Total %	10.9	0	10.9	0	21.8	15.6	0	0	0	21.1	19.7	0	

CITY TRAFFIC COUNTERS

626.991.7522

www.ctcounters.com

File Name : ArletaDev_2Axle
Site Code : 00000000
Start Date : 1/14/2014
Page No : 2

	Arleta Ave Southbound				Devonshire Ave Westbound				Arleta Ave Northbound				Devonshire Ave Eastbound				
Start Time	Left	Thru	Right	App. Total	Left	Thru	Right	App. Total	Left	Thru	Right	App. Total	Left	Thru	Right	App. Total	Int. Total
Peak Hour Analysis From 07:00 AM to 09:45 AM - Peak 1 of 1																	
Peak Hour for Entire Intersection Begins at 08:15 AM																	
08:15 AM	1	0	**3**	4	0	**4**	**5**	**9**	0	0	0	0	1	0	0	1	**14**
08:30 AM	**4**	0	2	**6**	0	3	0	3	0	0	0	0	0	3	0	3	12
08:45 AM	0	0	0	0	0	0	0	0	0	0	0	0	0	**4**	0	**4**	4
09:00 AM	0	0	1	1	0	1	1	2	0	0	0	0	**2**	0	0	2	5
Total Volume	5	0	6	11	0	8	6	14	0	0	0	0	3	7	0	10	35
% App. Total	45.5	0	54.5		0	57.1	42.9		0	0	0		30	70	0		
PHF	.313	.000	.500	.458	.000	.500	.300	.389	.000	.000	.000	.000	.375	.438	.000	.625	.625

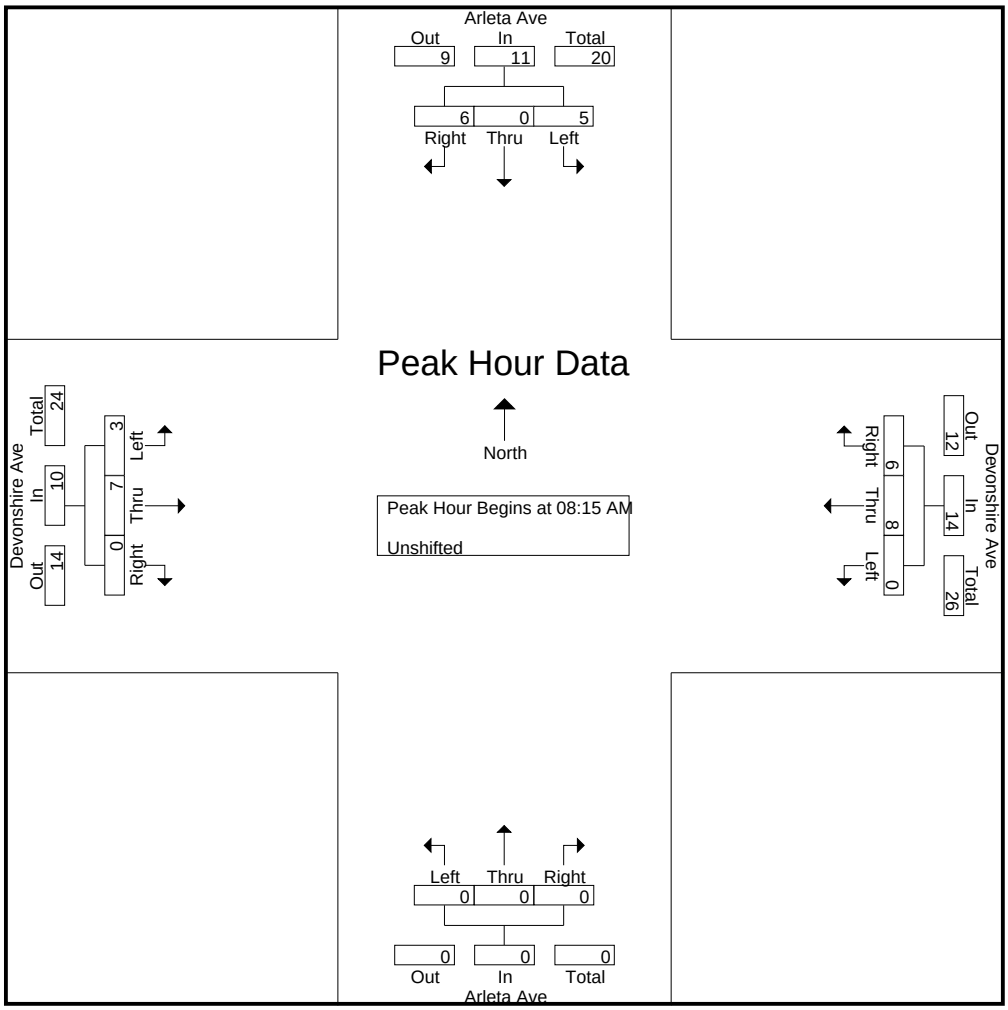

CITY TRAFFIC COUNTERS

626.991.7522

www.ctcounters.com

File Name : ArletaDev_2Axle
Site Code : 00000000
Start Date : 1/14/2014
Page No : 3

	Arleta Ave Southbound				Devonshire Ave Westbound				Arleta Ave Northbound				Devonshire Ave Eastbound				
Start Time	Left	Thru	Right	App. Total	Left	Thru	Right	App. Total	Left	Thru	Right	App. Total	Left	Thru	Right	App. Total	Int. Total
Peak Hour Analysis From 10:00 AM to 01:45 PM - Peak 1 of 1																	
Peak Hour for Entire Intersection Begins at 01:00 PM																	
01:00 PM	0	0	0	0	0	**2**	0	2	0	0	0	0	0	**1**	0	1	3
01:15 PM	0	0	0	0	0	1	0	1	0	0	0	0	**2**	0	0	**2**	3
01:30 PM	0	0	**1**	**1**	0	0	**3**	3	0	0	0	0	1	0	0	1	5
01:45 PM	0	0	1	1	0	2	2	**4**	0	0	0	0	2	0	0	2	**7**
Total Volume	0	0	2	2	0	5	5	10	0	0	0	0	5	1	0	6	18
% App. Total	0	0	100		0	50	50		0	0	0		83.3	16.7	0		
PHF	.000	.000	.500	.500	.000	.625	.417	.625	.000	.000	.000	.000	.625	.250	.000	.750	.643

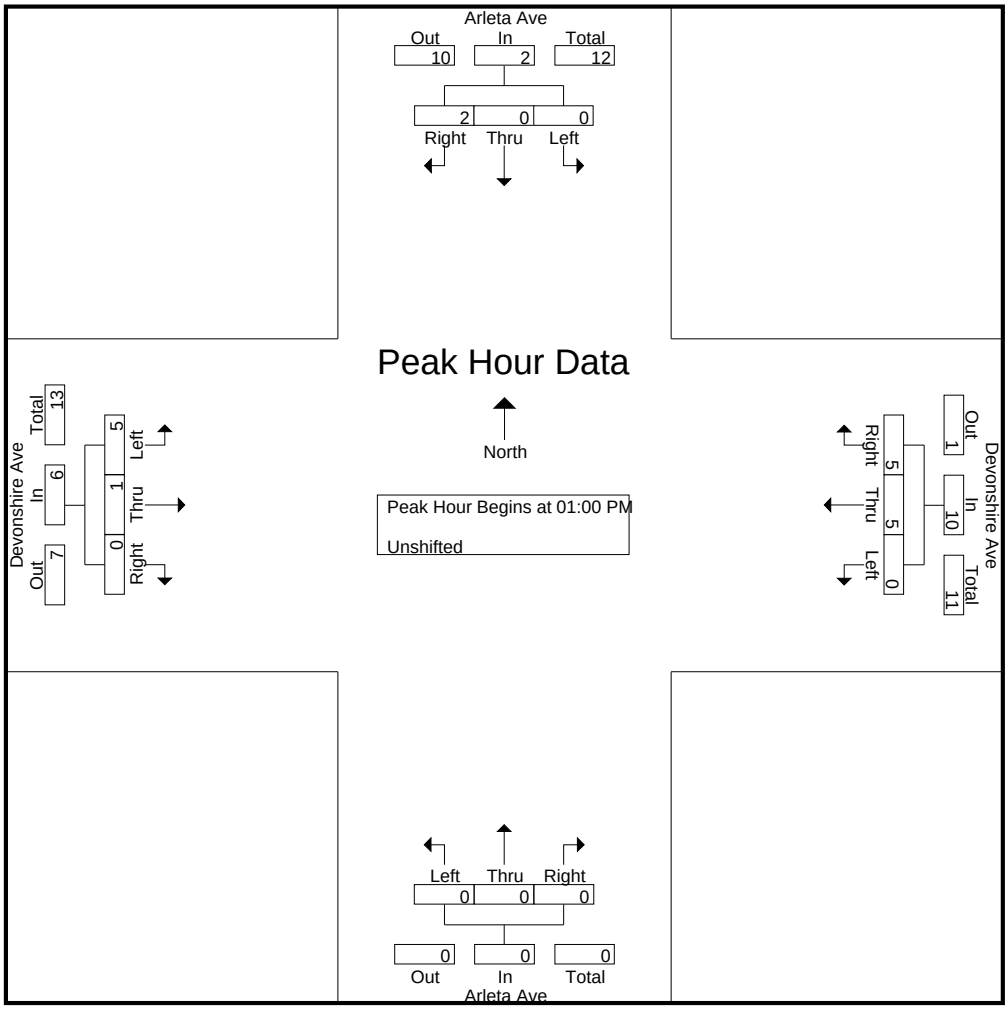

CITY TRAFFIC COUNTERS

626.991.7522

www.ctcounters.com

File Name : ArletaDev_2Axle
Site Code : 00000000
Start Date : 1/14/2014
Page No : 4

	Arleta Ave Southbound				Devonshire Ave Westbound				Arleta Ave Northbound				Devonshire Ave Eastbound				
Start Time	Left	Thru	Right	App. Total	Left	Thru	Right	App. Total	Left	Thru	Right	App. Total	Left	Thru	Right	App. Total	Int. Total
Peak Hour Analysis From 02:00 PM to 05:45 PM - Peak 1 of 1																	
Peak Hour for Entire Intersection Begins at 04:15 PM																	
04:15 PM	0	0	0	0	0	0	**2**	**2**	0	0	0	0	1	0	0	1	3
04:30 PM	1	0	0	1	0	1	0	1	0	0	0	0	**2**	**2**	0	**4**	6
04:45 PM	**3**	0	0	**3**	0	**2**	0	2	0	0	0	0	1	1	0	2	**7**
05:00 PM	1	0	0	1	0	0	1	1	0	0	0	0	2	1	0	3	5
Total Volume	5	0	0	5	0	3	3	6	0	0	0	0	6	4	0	10	21
% App. Total	100	0	0		0	50	50		0	0	0		60	40	0		
PHF	.417	.000	.000	.417	.000	.375	.375	.750	.000	.000	.000	.000	.750	.500	.000	.625	.750

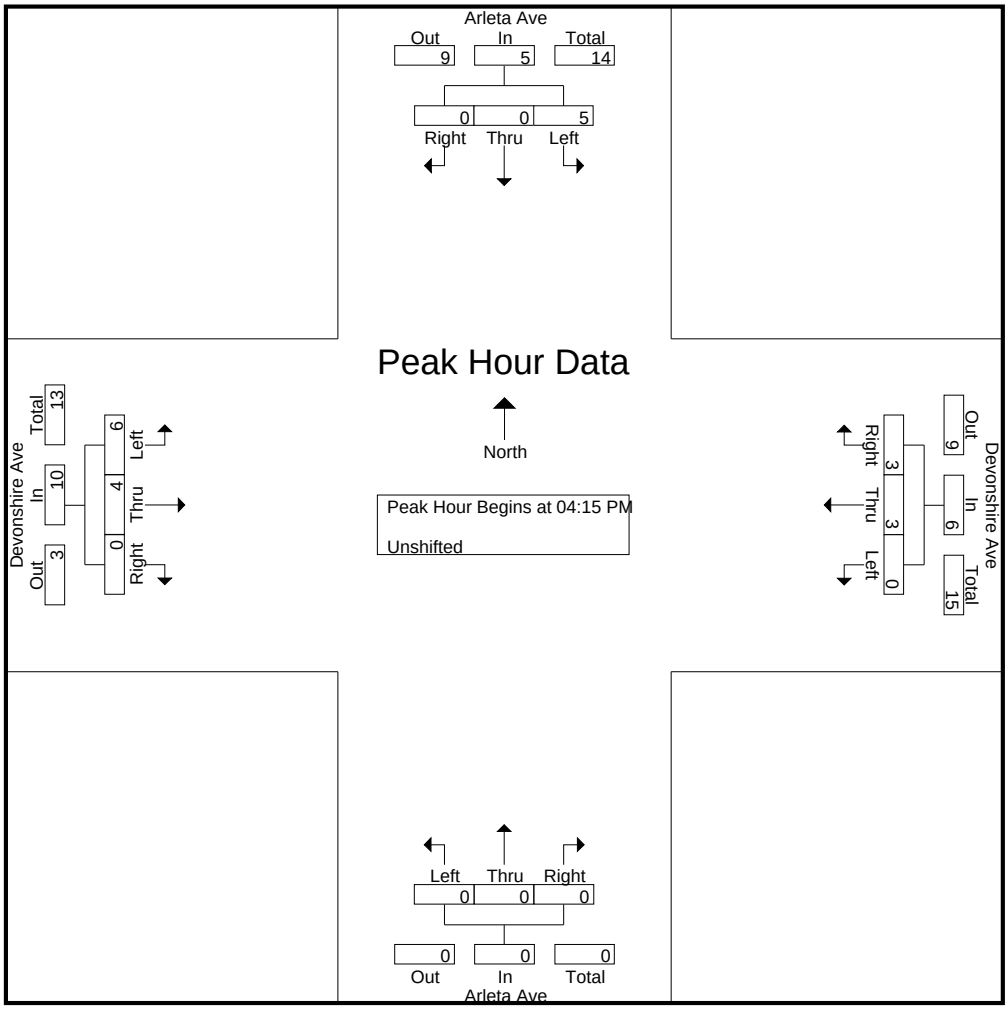

CITY TRAFFIC COUNTERS

626.991.7522

www.ctcounters.com

File Name : ArletaDev_3Axle
Site Code : 00000000
Start Date : 1/14/2014
Page No : 1

Groups Printed- Bank 1

	Arleta Ave Southbound			Devonshire Ave Westbound			Arleta Ave Northbound			Devonshire Ave Eastbound			
Start Time	Left	Thru	Right	Left	Thru	Right	Left	Thru	Right	Left	Thru	Right	Int. Total
07:00 AM	0	0	0	0	0	1	0	0	0	1	1	0	3
07:15 AM	1	0	0	0	0	0	0	0	0	1	0	0	2
07:30 AM	1	0	0	0	1	0	0	0	0	0	0	0	2
Total	2	0	0	0	1	1	0	0	0	2	1	0	7
08:30 AM	2	0	0	0	1	0	0	0	0	0	0	0	3
Total	2	0	0	0	1	0	0	0	0	0	0	0	3
09:00 AM	2	0	0	0	0	0	0	0	0	0	0	0	2
Total	2	0	0	0	0	0	0	0	0	0	0	0	2
12:30 PM	1	0	0	0	1	0	0	0	0	0	0	0	2
12:45 PM	1	0	0	0	0	0	0	0	0	0	0	0	1
Total	2	0	0	0	1	0	0	0	0	0	0	0	3
01:00 PM	0	0	0	0	0	1	0	0	0	0	1	0	2
01:45 PM	0	0	0	0	0	0	0	0	0	0	1	0	1
Total	0	0	0	0	0	1	0	0	0	0	2	0	3
03:00 PM	0	0	1	0	0	0	0	0	0	0	1	0	2
03:15 PM	1	0	0	0	0	0	0	0	0	0	0	0	1
Total	1	0	1	0	0	0	0	0	0	0	1	0	3
04:45 PM	1	0	0	0	0	0	0	0	0	0	0	0	1
Total	1	0	0	0	0	0	0	0	0	0	0	0	1
05:45 PM	0	0	0	0	0	0	0	0	0	0	1	0	1
Total	0	0	0	0	0	0	0	0	0	0	1	0	1
Grand Total	10	0	1	0	3	2	0	0	0	2	5	0	23
Apprch %	90.9	0	9.1	0	60	40	0	0	0	28.6	71.4	0	
Total %	43.5	0	4.3	0	13	8.7	0	0	0	8.7	21.7	0	

CITY TRAFFIC COUNTERS

626.991.7522

www.ctcounters.com

File Name : ArletaDev_3Axle
Site Code : 00000000
Start Date : 1/14/2014
Page No : 2

	Arleta Ave Southbound				Devonshire Ave Westbound				Arleta Ave Northbound				Devonshire Ave Eastbound				
Start Time	Left	Thru	Right	App. Total	Left	Thru	Right	App. Total	Left	Thru	Right	App. Total	Left	Thru	Right	App. Total	Int. Total
Peak Hour Analysis From 07:00 AM to 09:45 AM - Peak 1 of 1																	
Peak Hour for Entire Intersection Begins at 07:00 AM																	
07:00 AM	0	0	0	0	0	0	**1**	**1**	0	0	0	0	**1**	**1**	0	**2**	**3**
07:15 AM	**1**	0	0	**1**	0	0	0	0	0	0	0	0	1	0	0	1	2
07:30 AM	1	0	0	1	0	**1**	0	1	0	0	0	0	0	0	0	0	2
07:45 AM	0	0	0	0	0	0	0	0	0	0	0	0	0	0	0	0	0
Total Volume	2	0	0	2	0	1	1	2	0	0	0	0	2	1	0	3	7
% App. Total	100	0	0		0	50	50		0	0	0		66.7	33.3	0		
PHF	.500	.000	.000	.500	.000	.250	.250	.500	.000	.000	.000	.000	.500	.250	.000	.375	.583

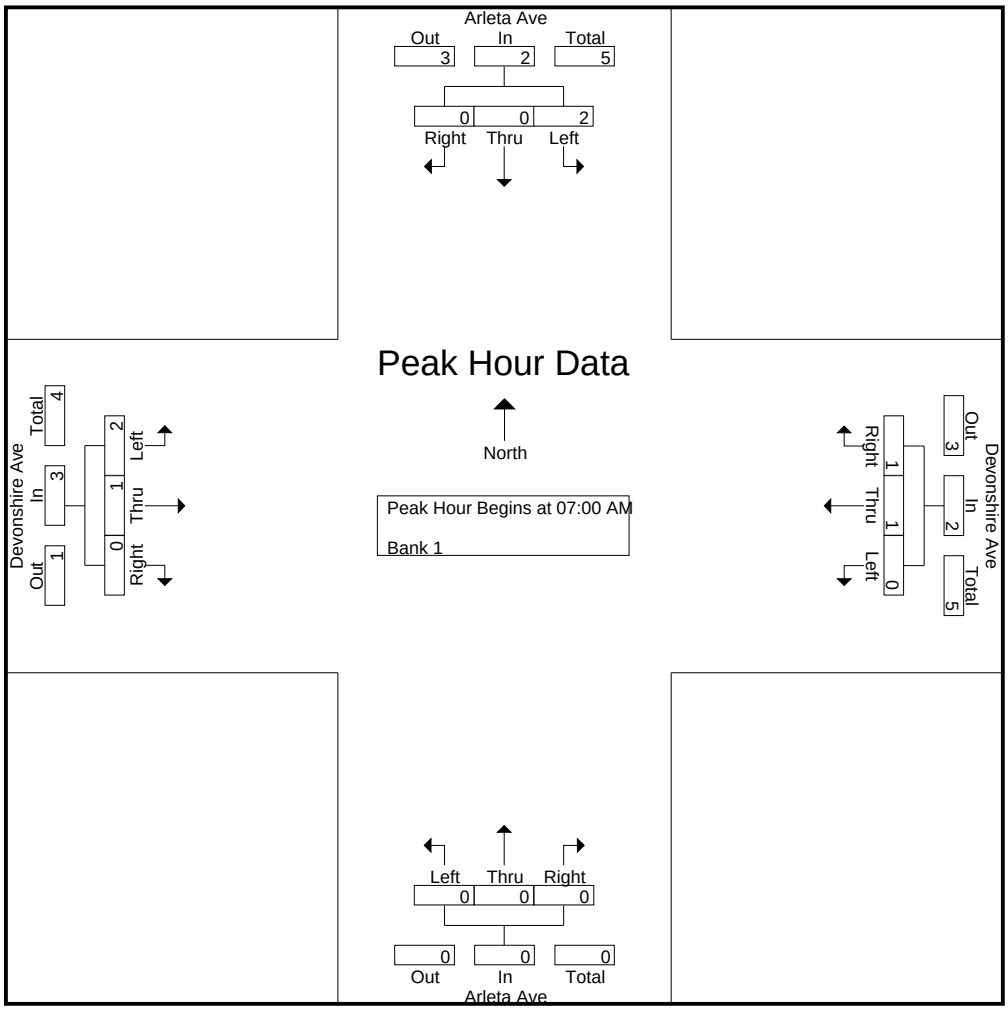

CITY TRAFFIC COUNTERS

626.991.7522

www.ctcounters.com

File Name : ArletaDev_3Axle
Site Code : 00000000
Start Date : 1/14/2014
Page No : 3

	Arleta Ave Southbound				Devonshire Ave Westbound				Arleta Ave Northbound				Devonshire Ave Eastbound				
Start Time	Left	Thru	Right	App. Total	Left	Thru	Right	App. Total	Left	Thru	Right	App. Total	Left	Thru	Right	App. Total	Int. Total
Peak Hour Analysis From 10:00 AM to 01:45 PM - Peak 1 of 1																	
Peak Hour for Entire Intersection Begins at 12:15 PM																	
12:15 PM	0	0	0	0	0	0	0	0	0	0	0	0	0	0	0	0	0
12:30 PM	**1**	0	0	**1**	0	**1**	0	**1**	0	0	0	0	0	0	0	0	**2**
12:45 PM	1	0	0	1	0	0	0	0	0	0	0	0	0	0	0	0	1
01:00 PM	0	0	0	0	0	0	**1**	1	0	0	0	0	0	**1**	0	**1**	2
Total Volume	2	0	0	2	0	1	1	2	0	0	0	0	0	1	0	1	5
% App. Total	100	0	0		0	50	50		0	0	0		0	100	0		
PHF	.500	.000	.000	.500	.000	.250	.250	.500	.000	.000	.000	.000	.000	.250	.000	.250	.625

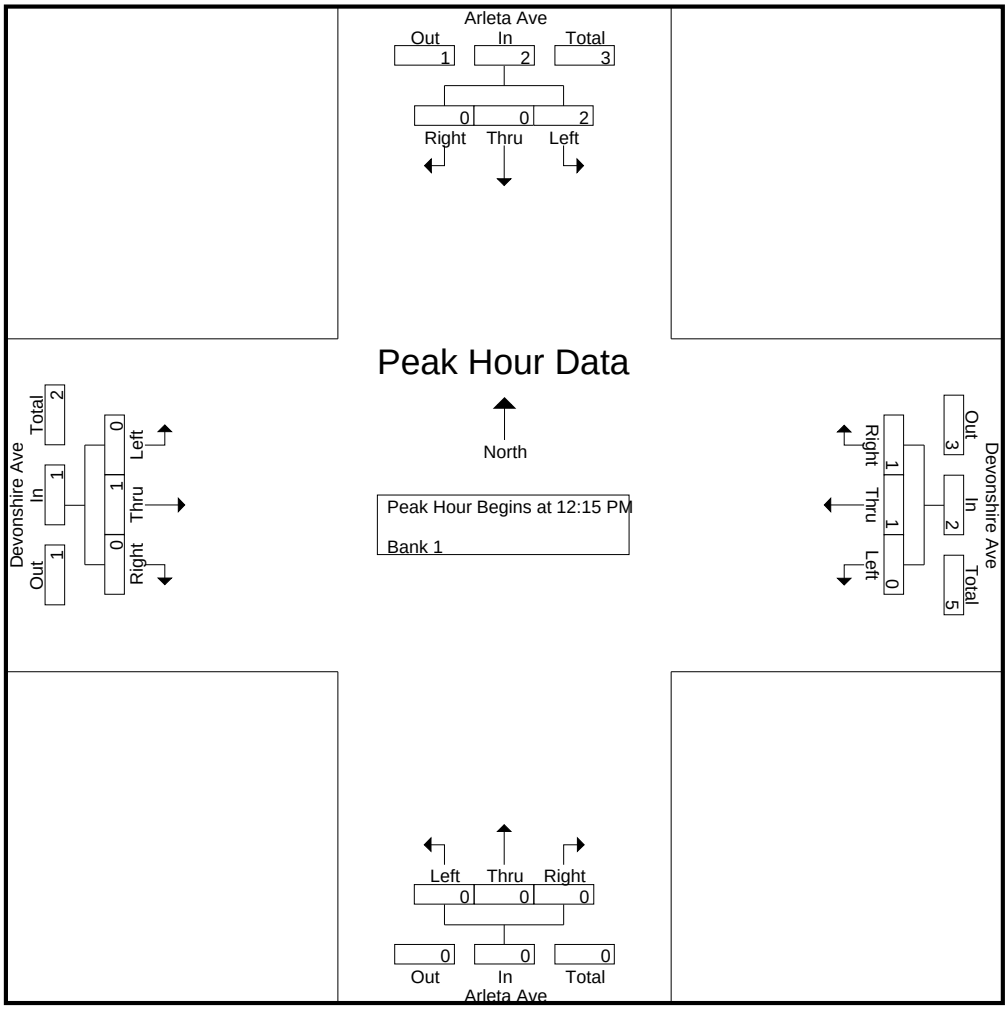

CITY TRAFFIC COUNTERS

626.991.7522

www.ctcounters.com

File Name : ArletaDev_3Axle
Site Code : 00000000
Start Date : 1/14/2014
Page No : 4

	Arleta Ave Southbound				Devonshire Ave Westbound				Arleta Ave Northbound				Devonshire Ave Eastbound				
Start Time	Left	Thru	Right	App. Total	Left	Thru	Right	App. Total	Left	Thru	Right	App. Total	Left	Thru	Right	App. Total	Int. Total
Peak Hour Analysis From 02:00 PM to 05:45 PM - Peak 1 of 1																	
Peak Hour for Entire Intersection Begins at 02:30 PM																	
02:30 PM	0	0	0	0	0	0	0	0	0	0	0	0	0	0	0	0	0
02:45 PM	0	0	0	0	0	0	0	0	0	0	0	0	0	0	0	0	0
03:00 PM	0	0	**1**	**1**	0	0	0	0	0	0	0	0	0	**1**	0	**1**	**2**
03:15 PM	**1**	0	0	1	0	0	0	0	0	0	0	0	0	0	0	0	1
Total Volume	1	0	1	2	0	0	0	0	0	0	0	0	0	1	0	1	3
% App. Total	50	0	50		0	0	0		0	0	0		0	100	0		
PHF	.250	.000	.250	.500	.000	.000	.000	.000	.000	.000	.000	.000	.000	.250	.000	.250	.375

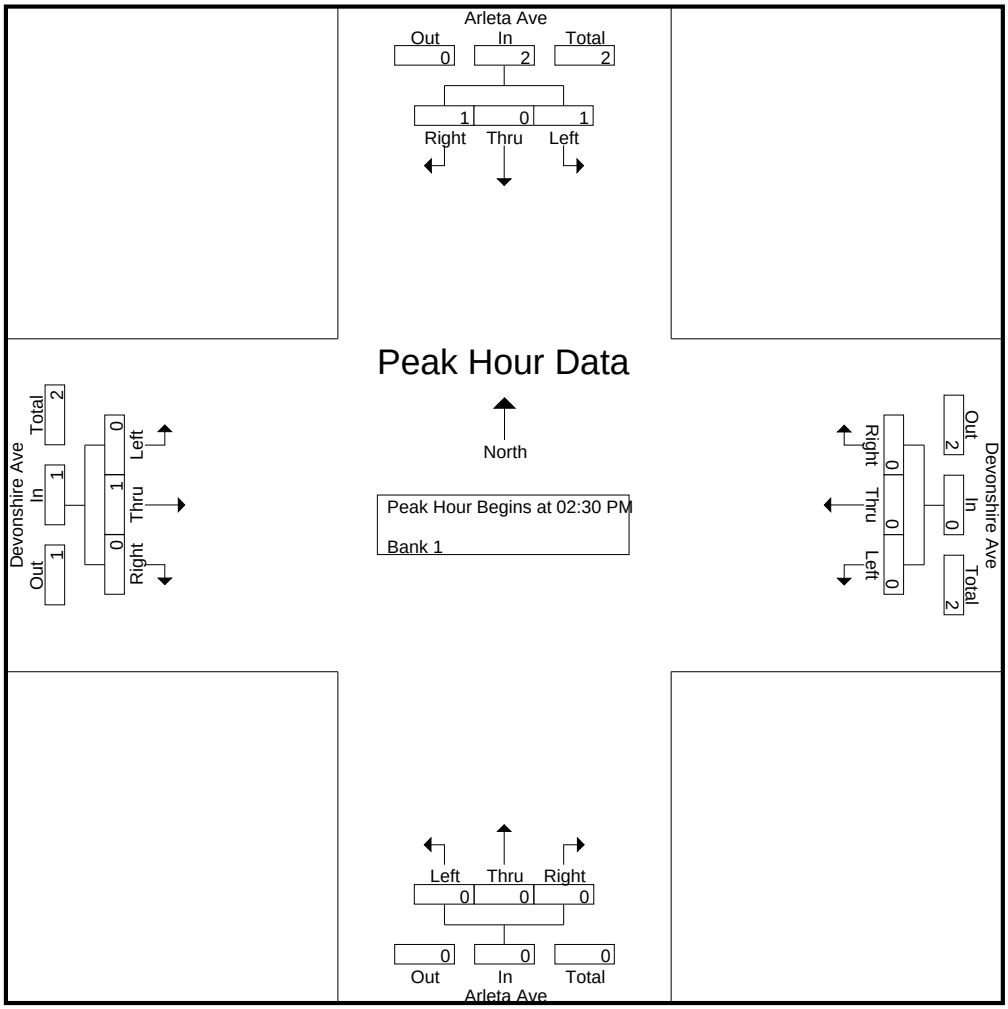

CITY TRAFFIC COUNTERS

626.991.7522

www.ctcounters.com

File Name : ArletaDev_4Axle
Site Code : 00000000
Start Date : 1/14/2014
Page No : 1

Groups Printed- Bank 2

	Arleta Ave Southbound			Devonshire Ave Westbound			Arleta Ave Northbound			Devonshire Ave Eastbound			
Start Time	Left	Thru	Right	Left	Thru	Right	Left	Thru	Right	Left	Thru	Right	Int. Total
07:45 AM	0	0	2	0	0	1	0	0	0	0	0	0	3
Total	0	0	2	0	0	1	0	0	0	0	0	0	3
08:00 AM	0	0	3	0	0	0	0	0	0	0	0	0	3
08:45 AM	0	0	1	0	0	0	0	0	0	0	0	0	1
Total	0	0	4	0	0	0	0	0	0	0	0	0	4
01:30 PM	0	0	1	0	0	0	0	0	0	0	0	0	1
01:45 PM	0	0	0	0	0	0	0	0	0	2	0	0	2
Total	0	0	1	0	0	0	0	0	0	2	0	0	3
03:00 PM	1	0	0	0	0	0	0	0	0	0	0	0	1
03:15 PM	1	0	0	0	0	0	0	0	0	1	0	0	2
03:30 PM	0	0	0	0	0	0	0	0	0	0	1	0	1
Total	2	0	0	0	0	0	0	0	0	1	1	0	4
04:45 PM	0	0	1	0	0	0	0	0	0	0	0	0	1
Total	0	0	1	0	0	0	0	0	0	0	0	0	1
05:00 PM	0	0	0	0	0	0	0	0	0	0	1	0	1
05:30 PM	1	0	0	0	0	0	0	0	0	0	0	0	1
Total	1	0	0	0	0	0	0	0	0	0	1	0	2
Grand Total	3	0	8	0	0	1	0	0	0	3	2	0	17
Apprch %	27.3	0	72.7	0	0	100	0	0	0	60	40	0	
Total %	17.6	0	47.1	0	0	5.9	0	0	0	17.6	11.8	0	

CITY TRAFFIC COUNTERS

626.991.7522

www.ctcounters.com

File Name : ArletaDev_4Axle
Site Code : 00000000
Start Date : 1/14/2014
Page No : 2

	Arleta Ave Southbound				Devonshire Ave Westbound				Arleta Ave Northbound				Devonshire Ave Eastbound				
Start Time	Left	Thru	Right	App. Total	Left	Thru	Right	App. Total	Left	Thru	Right	App. Total	Left	Thru	Right	App. Total	Int. Total
Peak Hour Analysis From 07:00 AM to 09:45 AM - Peak 1 of 1																	
Peak Hour for Entire Intersection Begins at 07:15 AM																	
07:15 AM	0	0	0	0	0	0	0	0	0	0	0	0	0	0	0	0	0
07:30 AM	0	0	0	0	0	0	0	0	0	0	0	0	0	0	0	0	0
07:45 AM	0	0	2	2	0	0	**1**	**1**	0	0	0	0	0	0	0	0	**3**
08:00 AM	0	0	**3**	**3**	0	0	0	0	0	0	0	0	0	0	0	0	3
Total Volume	0	0	5	5	0	0	1	1	0	0	0	0	0	0	0	0	6
% App. Total	0	0	100		0	0	100		0	0	0		0	0	0		
PHF	.000	.000	.417	.417	.000	.000	.250	.250	.000	.000	.000	.000	.000	.000	.000	.000	.500

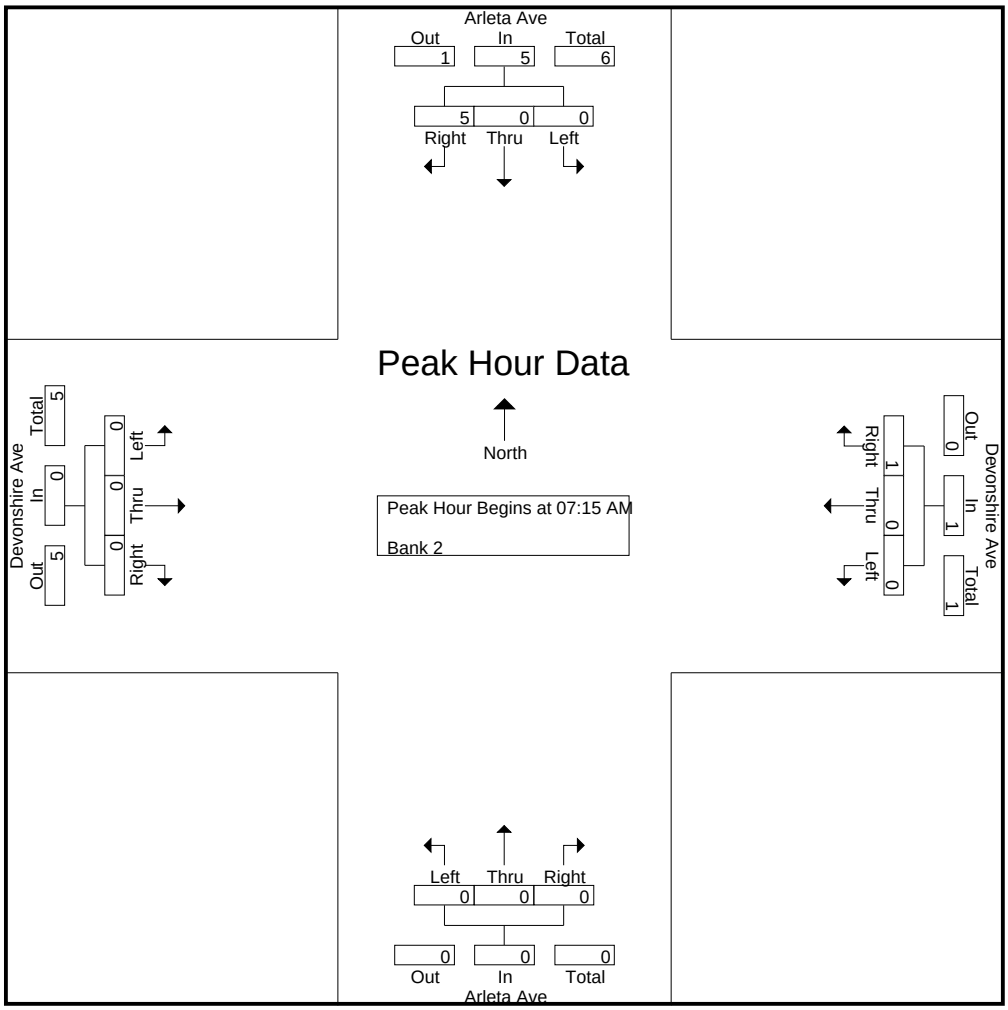

CITY TRAFFIC COUNTERS

626.991.7522

www.ctcounters.com

File Name : ArletaDev_4Axle
Site Code : 00000000
Start Date : 1/14/2014
Page No : 3

	Arleta Ave Southbound				Devonshire Ave Westbound				Arleta Ave Northbound				Devonshire Ave Eastbound				
Start Time	Left	Thru	Right	App. Total	Left	Thru	Right	App. Total	Left	Thru	Right	App. Total	Left	Thru	Right	App. Total	Int. Total
Peak Hour Analysis From 10:00 AM to 01:45 PM - Peak 1 of 1																	
Peak Hour for Entire Intersection Begins at 01:00 PM																	
01:00 PM	0	0	0	0	0	0	0	0	0	0	0	0	0	0	0	0	0
01:15 PM	0	0	0	0	0	0	0	0	0	0	0	0	0	0	0	0	0
01:30 PM	0	0	**1**	**1**	0	0	0	0	0	0	0	0	0	0	0	0	1
01:45 PM	0	0	0	0	0	0	0	0	0	0	0	0	**2**	0	0	**2**	**2**
Total Volume	0	0	1	1	0	0	0	0	0	0	0	0	2	0	0	2	3
% App. Total	0	0	100		0	0	0		0	0	0		100	0	0		
PHF	.000	.000	.250	.250	.000	.000	.000	.000	.000	.000	.000	.000	.250	.000	.000	.250	.375

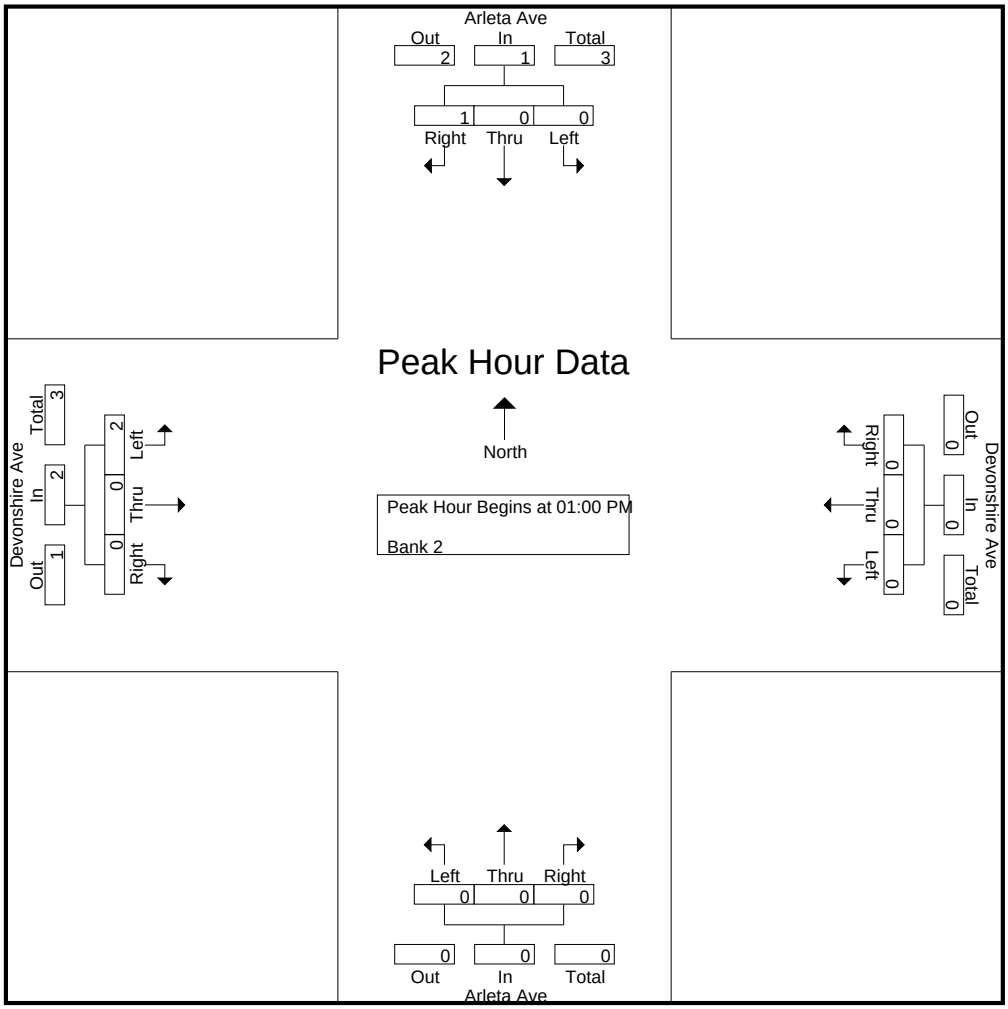

CITY TRAFFIC COUNTERS

626.991.7522

www.ctcounters.com

File Name : ArletaDev_4Axle
Site Code : 00000000
Start Date : 1/14/2014
Page No : 4

	Arleta Ave Southbound				Devonshire Ave Westbound				Arleta Ave Northbound				Devonshire Ave Eastbound				
Start Time	Left	Thru	Right	App. Total	Left	Thru	Right	App. Total	Left	Thru	Right	App. Total	Left	Thru	Right	App. Total	Int. Total
Peak Hour Analysis From 02:00 PM to 05:45 PM - Peak 1 of 1																	
Peak Hour for Entire Intersection Begins at 02:45 PM																	
02:45 PM	0	0	0	0	0	0	0	0	0	0	0	0	0	0	0	0	0
03:00 PM	**1**	0	0	**1**	0	0	0	0	0	0	0	0	0	0	0	0	1
03:15 PM	1	0	0	1	0	0	0	0	0	0	0	0	**1**	0	0	**1**	**2**
03:30 PM	0	0	0	0	0	0	0	0	0	0	0	0	0	**1**	0	1	1
Total Volume	2	0	0	2	0	0	0	0	0	0	0	0	1	1	0	2	4
% App. Total	100	0	0		0	0	0		0	0	0		50	50	0		
PHF	.500	.000	.000	.500	.000	.000	.000	.000	.000	.000	.000	.000	.250	.250	.000	.500	.500

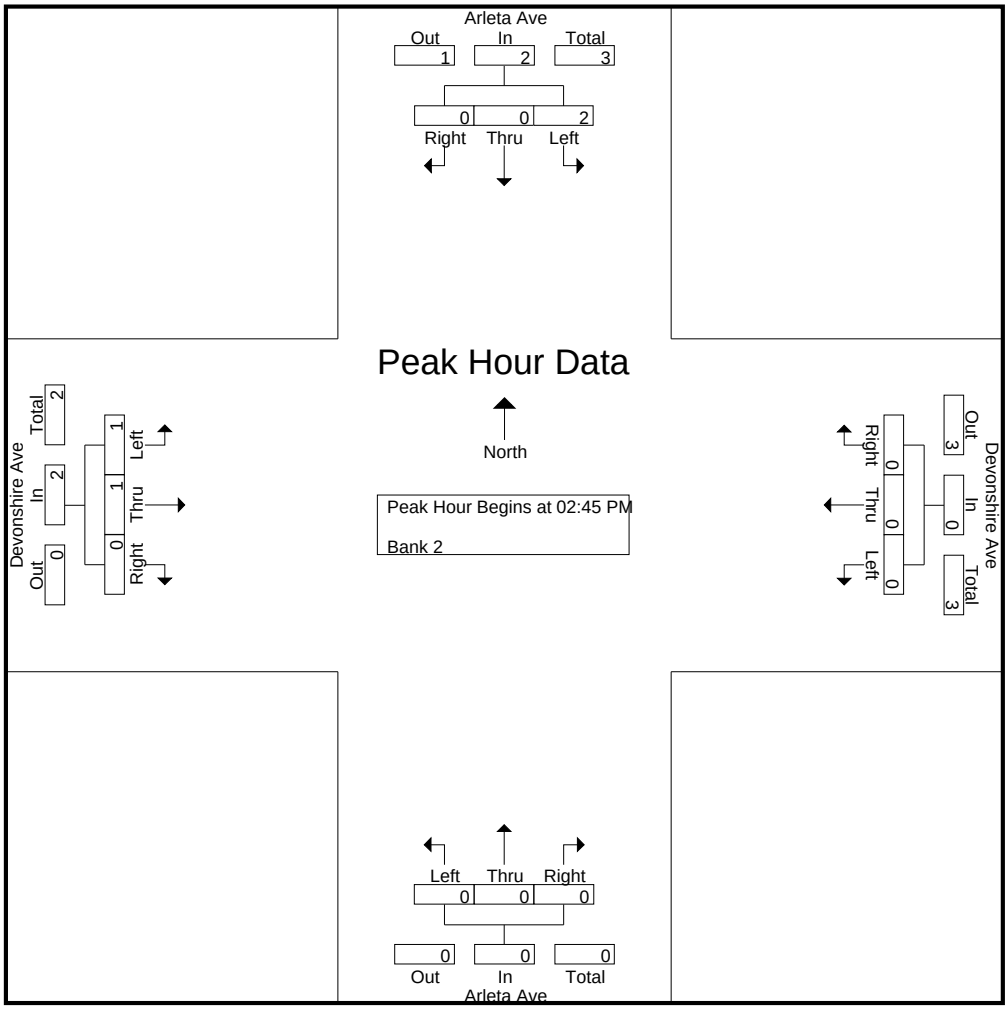

CITY TRAFFIC COUNTERS

626.991.7522

www.ctcounters.com

File Name : ArletaDev_5Axle
Site Code : 00000000
Start Date : 1/14/2014
Page No : 1

Groups Printed- Unshifted

	Arleta Ave Southbound			Devonshire St Westbound			Arleta Ave Northbound			Devonshire St Eastbound			
Start Time	Left	Thru	Right	Left	Thru	Right	Left	Thru	Right	Left	Thru	Right	Int. Total
07:00 AM	1	0	0	0	0	0	0	0	0	0	0	0	1
07:30 AM	0	0	0	0	0	0	0	0	0	1	1	0	2
Total	1	0	0	0	0	0	0	0	0	1	1	0	3
08:30 AM	1	0	0	0	0	0	0	0	0	0	0	0	1
Total	1	0	0	0	0	0	0	0	0	0	0	0	1
09:15 AM	0	0	0	0	0	0	0	0	0	1	0	0	1
Total	0	0	0	0	0	0	0	0	0	1	0	0	1
12:00 PM	0	0	0	0	1	0	0	0	0	0	0	0	1
Total	0	0	0	0	1	0	0	0	0	0	0	0	1
01:15 PM	0	0	0	0	0	0	0	0	0	0	1	0	1
Total	0	0	0	0	0	0	0	0	0	0	1	0	1
04:00 PM	0	0	0	0	1	0	0	0	0	0	0	0	1
04:15 PM	0	0	0	0	0	1	0	0	0	0	0	0	1
04:45 PM	0	0	0	0	0	0	0	0	0	0	1	0	1
Total	0	0	0	0	1	1	0	0	0	0	1	0	3
05:00 PM	0	0	0	0	0	0	0	0	0	0	1	0	1
Total	0	0	0	0	0	0	0	0	0	0	1	0	1
Grand Total	2	0	0	0	2	1	0	0	0	2	4	0	11
Apprch %	100	0	0	0	66.7	33.3	0	0	0	33.3	66.7	0	
Total %	18.2	0	0	0	18.2	9.1	0	0	0	18.2	36.4	0	

CITY TRAFFIC COUNTERS

626.991.7522

www.ctcounters.com

File Name : ArletaDev_5Axle
Site Code : 00000000
Start Date : 1/14/2014
Page No : 2

	Arleta Ave Southbound				Devonshire St Westbound				Arleta Ave Northbound				Devonshire St Eastbound				
Start Time	Left	Thru	Right	App. Total	Left	Thru	Right	App. Total	Left	Thru	Right	App. Total	Left	Thru	Right	App. Total	Int. Total
Peak Hour Analysis From 07:00 AM to 09:45 AM - Peak 1 of 1																	
Peak Hour for Entire Intersection Begins at 07:00 AM																	
07:00 AM	**1**	0	0	**1**	0	0	0	0	0	0	0	0	0	0	0	0	1
07:15 AM	0	0	0	0	0	0	0	0	0	0	0	0	0	0	0	0	0
07:30 AM	0	0	0	0	0	0	0	0	0	0	0	0	**1**	**1**	0	**2**	**2**
07:45 AM	0	0	0	0	0	0	0	0	0	0	0	0	0	0	0	0	0
Total Volume	1	0	0	1	0	0	0	0	0	0	0	0	1	1	0	2	3
% App. Total	100	0	0		0	0	0		0	0	0		50	50	0		
PHF	.250	.000	.000	.250	.000	.000	.000	.000	.000	.000	.000	.000	.250	.250	.000	.250	.375

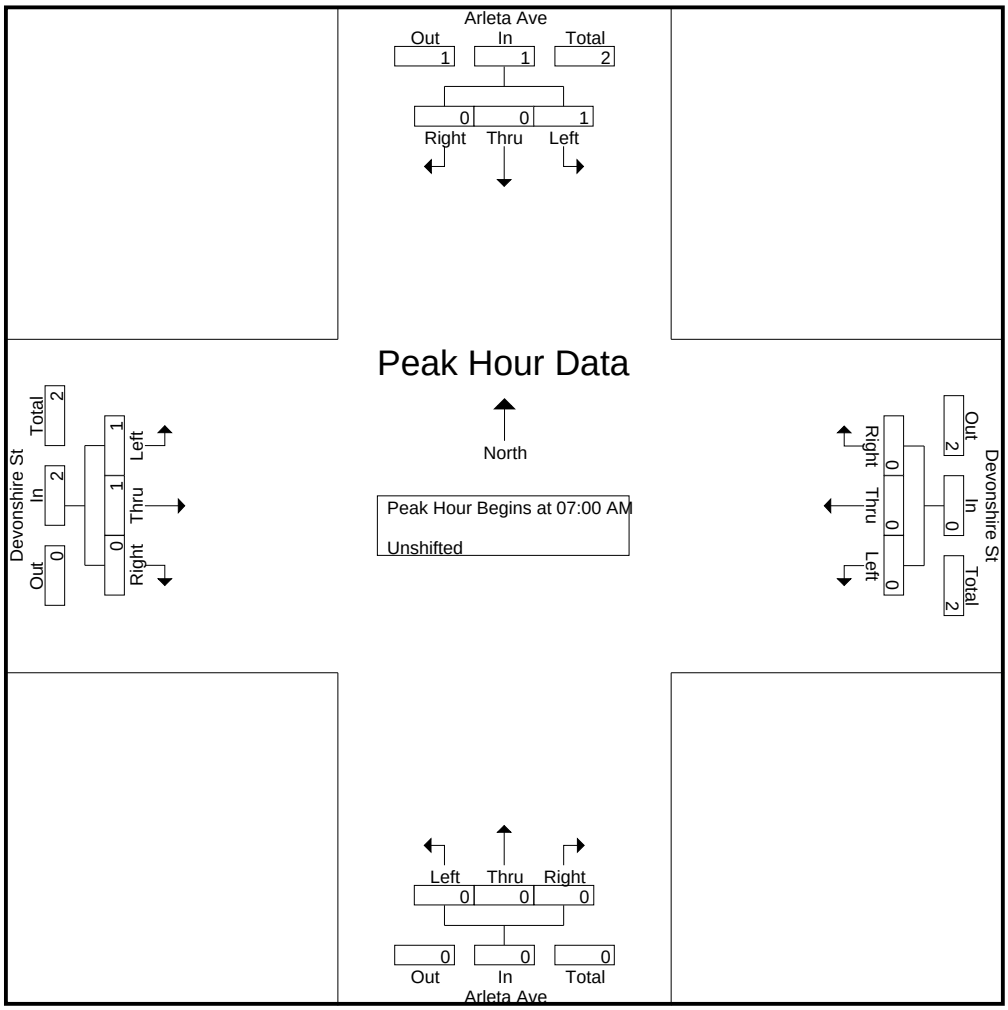

CITY TRAFFIC COUNTERS

626.991.7522

www.ctcounters.com

File Name : ArletaDev_5Axle
Site Code : 00000000
Start Date : 1/14/2014
Page No : 3

	Arleta Ave Southbound				Devonshire St Westbound				Arleta Ave Northbound				Devonshire St Eastbound				
Start Time	Left	Thru	Right	App. Total	Left	Thru	Right	App. Total	Left	Thru	Right	App. Total	Left	Thru	Right	App. Total	Int. Total
Peak Hour Analysis From 10:00 AM to 01:45 PM - Peak 1 of 1																	
Peak Hour for Entire Intersection Begins at 11:15 AM																	
11:15 AM	0	0	0	0	0	0	0	0	0	0	0	0	0	0	0	0	0
11:30 AM	0	0	0	0	0	0	0	0	0	0	0	0	0	0	0	0	0
11:45 AM	0	0	0	0	0	0	0	0	0	0	0	0	0	0	0	0	0
12:00 PM	0	0	0	0	0	**1**	0	**1**	0	0	0	0	0	0	0	0	**1**
Total Volume	0	0	0	0	0	1	0	1	0	0	0	0	0	0	0	0	1
% App. Total	0	0	0		0	100	0		0	0	0		0	0	0		
PHF	.000	.000	.000	.000	.000	.250	.000	.250	.000	.000	.000	.000	.000	.000	.000	.000	.250

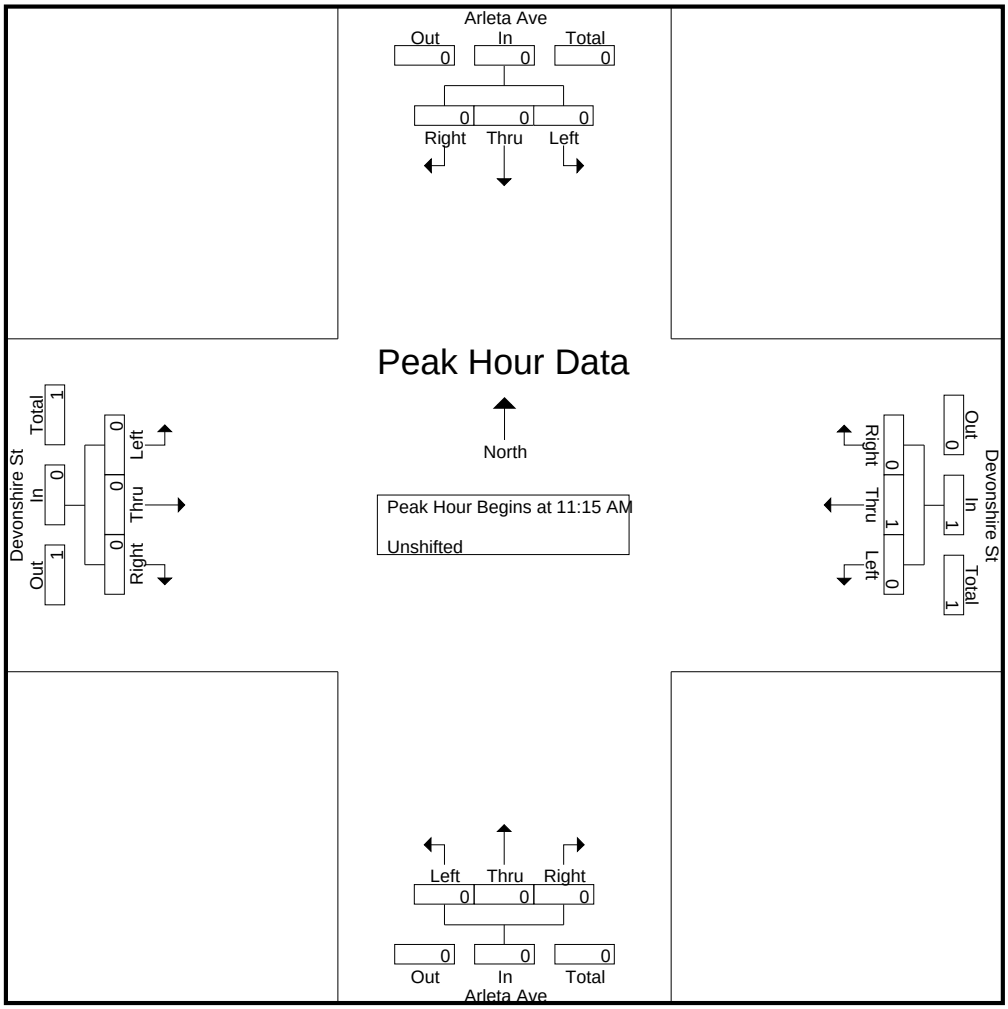

CITY TRAFFIC COUNTERS

626.991.7522

www.ctcounters.com

File Name : ArletaDev_5Axle
Site Code : 00000000
Start Date : 1/14/2014
Page No : 4

	Arleta Ave Southbound				Devonshire St Westbound				Arleta Ave Northbound				Devonshire St Eastbound				
Start Time	Left	Thru	Right	App. Total	Left	Thru	Right	App. Total	Left	Thru	Right	App. Total	Left	Thru	Right	App. Total	Int. Total
Peak Hour Analysis From 02:00 PM to 05:45 PM - Peak 1 of 1																	
Peak Hour for Entire Intersection Begins at 04:00 PM																	
04:00 PM	0	0	0	0	0	**1**	0	**1**	0	0	0	0	0	0	0	0	**1**
04:15 PM	0	0	0	0	0	0	**1**	1	0	0	0	0	0	0	0	0	1
04:30 PM	0	0	0	0	0	0	0	0	0	0	0	0	0	0	0	0	0
04:45 PM	0	0	0	0	0	0	0	0	0	0	0	0	0	**1**	0	**1**	1
Total Volume	0	0	0	0	0	1	1	2	0	0	0	0	0	1	0	1	3
% App. Total	0	0	0		0	50	50		0	0	0		0	100	0		
PHF	.000	.000	.000	.000	.000	.250	.250	.500	.000	.000	.000	.000	.000	.250	.000	.250	.750

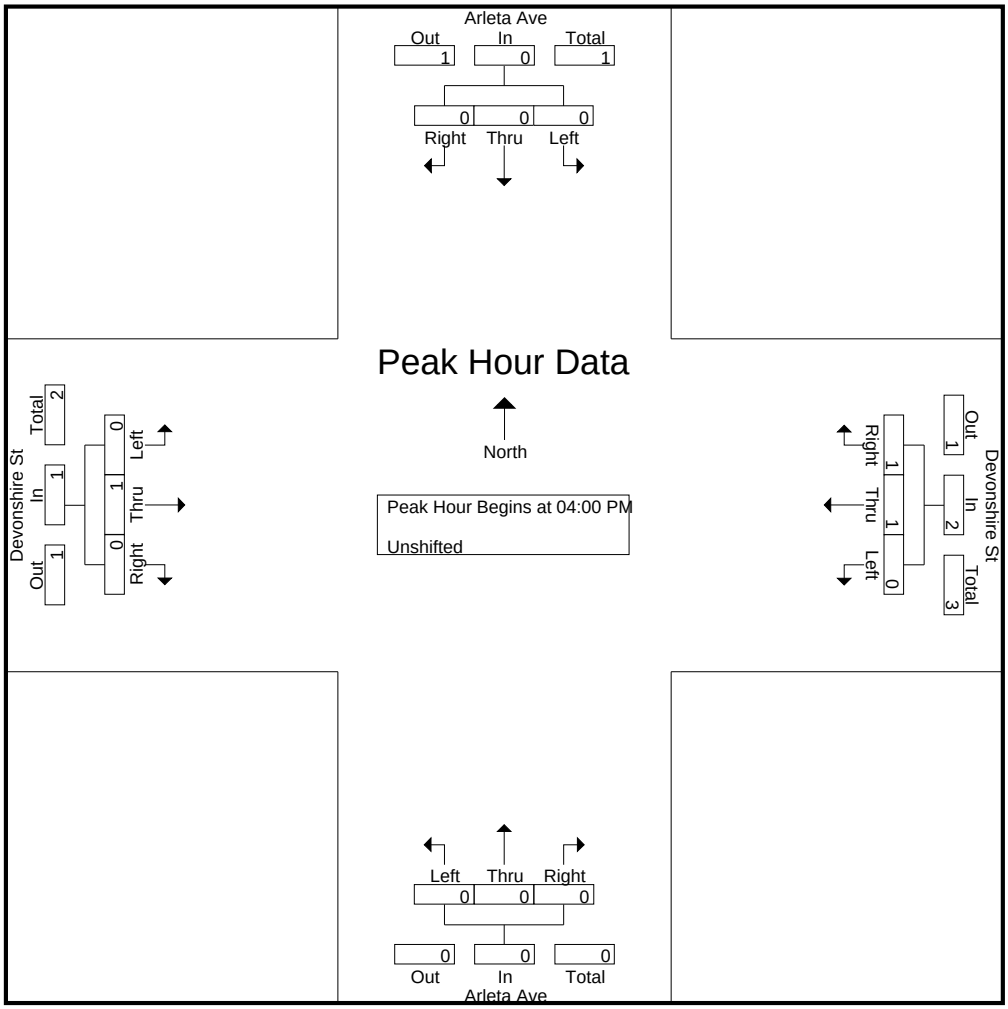

CITY TRAFFIC COUNTERS

626.991.7522

www.ctcounters.com

File Name : ArletaPaxton
Site Code : 00000000
Start Date : 1/14/2014
Page No : 1

Groups Printed- Unshifted

	Arleta Ave Southbound			Paxton St Westbound			Arleta Ave Northbound			Paxton St Eastbound			
Start Time	Left	Thru	Right	Left	Thru	Right	Left	Thru	Right	Left	Thru	Right	Int. Total
07:00 AM	24	32	0	127	0	17	0	20	75	0	0	0	295
07:15 AM	42	52	0	148	0	18	0	12	118	0	0	0	390
07:30 AM	46	69	0	169	0	22	0	19	104	0	0	0	429
07:45 AM	32	49	0	173	0	21	0	25	140	0	0	0	440
Total	144	202	0	617	0	78	0	76	437	0	0	0	1554
08:00 AM	52	46	0	147	0	16	0	20	106	0	0	0	387
08:15 AM	35	39	0	154	0	5	0	12	97	0	0	0	342
08:30 AM	20	31	0	106	0	17	0	6	65	0	0	0	245
08:45 AM	22	23	0	99	0	10	0	16	61	0	0	0	231
Total	129	139	0	506	0	48	0	54	329	0	0	0	1205
09:00 AM	13	15	0	99	0	21	0	8	69	0	0	0	225
09:15 AM	13	20	0	53	0	5	0	15	74	0	0	0	180
09:30 AM	4	11	0	57	0	16	0	9	66	0	0	0	163
09:45 AM	4	8	0	40	0	10	0	4	53	0	0	0	119
Total	34	54	0	249	0	52	0	36	262	0	0	0	687
12:00 PM	16	12	0	53	0	11	0	12	74	0	0	0	178
12:15 PM	16	12	0	55	0	9	0	15	73	0	0	0	180
12:30 PM	14	11	0	50	0	20	0	10	85	0	0	0	190
12:45 PM	11	9	0	54	0	15	0	12	65	0	0	0	166
Total	57	44	0	212	0	55	0	49	297	0	0	0	714
01:00 PM	22	17	0	60	0	25	0	12	59	0	0	0	195
01:15 PM	16	5	0	67	0	33	0	10	58	0	0	0	189
01:30 PM	25	12	0	64	0	31	0	7	87	0	0	0	226
01:45 PM	18	9	0	61	0	17	0	12	84	0	0	0	201
Total	81	43	0	252	0	106	0	41	288	0	0	0	811
03:00 PM	17	13	0	68	0	22	0	26	81	0	0	0	227
03:15 PM	22	14	0	89	0	25	0	19	98	0	0	0	267
03:30 PM	22	10	0	85	0	18	0	25	114	0	0	0	274
03:45 PM	25	15	0	80	0	26	0	22	129	0	0	0	297
Total	86	52	0	322	0	91	0	92	422	0	0	0	1065
04:00 PM	20	11	0	77	0	34	0	33	119	0	0	0	294
04:15 PM	18	17	0	87	0	16	0	47	127	0	0	0	312
04:30 PM	21	15	0	80	0	23	0	26	149	0	0	0	314
04:45 PM	18	17	0	107	0	35	0	37	151	0	0	0	365
Total	77	60	0	351	0	108	0	143	546	0	0	0	1285
05:00 PM	17	15	0	97	0	16	0	26	133	0	0	0	304
05:15 PM	29	16	0	93	0	31	0	41	155	0	0	0	365
05:30 PM	18	17	0	120	0	20	0	23	149	0	0	0	347
05:45 PM	24	10	0	115	0	17	0	33	154	0	0	0	353
Total	88	58	0	425	0	84	0	123	591	0	0	0	1369
Grand Total	696	652	0	2934	0	622	0	614	3172	0	0	0	8690
Apprch %	51.6	48.4	0	82.5	0	17.5	0	16.2	83.8	0	0	0	
Total %	8	7.5	0	33.8	0	7.2	0	7.1	36.5	0	0	0	

CITY TRAFFIC COUNTERS

626.991.7522

www.ctcounters.com

File Name : ArletaPaxton
Site Code : 00000000
Start Date : 1/14/2014
Page No : 2

	Arleta Ave Southbound				Paxton St Westbound				Arleta Ave Northbound				Paxton St Eastbound				
Start Time	Left	Thru	Right	App. Total	Left	Thru	Right	App. Total	Left	Thru	Right	App. Total	Left	Thru	Right	App. Total	Int. Total
Peak Hour Analysis From 07:00 AM to 09:45 AM - Peak 1 of 1																	
Peak Hour for Entire Intersection Begins at 07:15 AM																	
07:15 AM	42	52	0	94	148	0	18	166	0	12	118	130	0	0	0	0	390
07:30 AM	46	**69**	0	**115**	169	0	**22**	191	0	19	104	123	0	0	0	0	429
07:45 AM	32	49	0	81	**173**	0	21	**194**	0	**25**	**140**	**165**	0	0	0	0	**440**
08:00 AM	**52**	46	0	98	147	0	16	163	0	20	106	126	0	0	0	0	387
Total Volume	172	216	0	388	637	0	77	714	0	76	468	544	0	0	0	0	1646
% App. Total	44.3	55.7	0		89.2	0	10.8		0	14	86		0	0	0		
PHF	.827	.783	.000	.843	.921	.000	.875	.920	.000	.760	.836	.824	.000	.000	.000	.000	.935

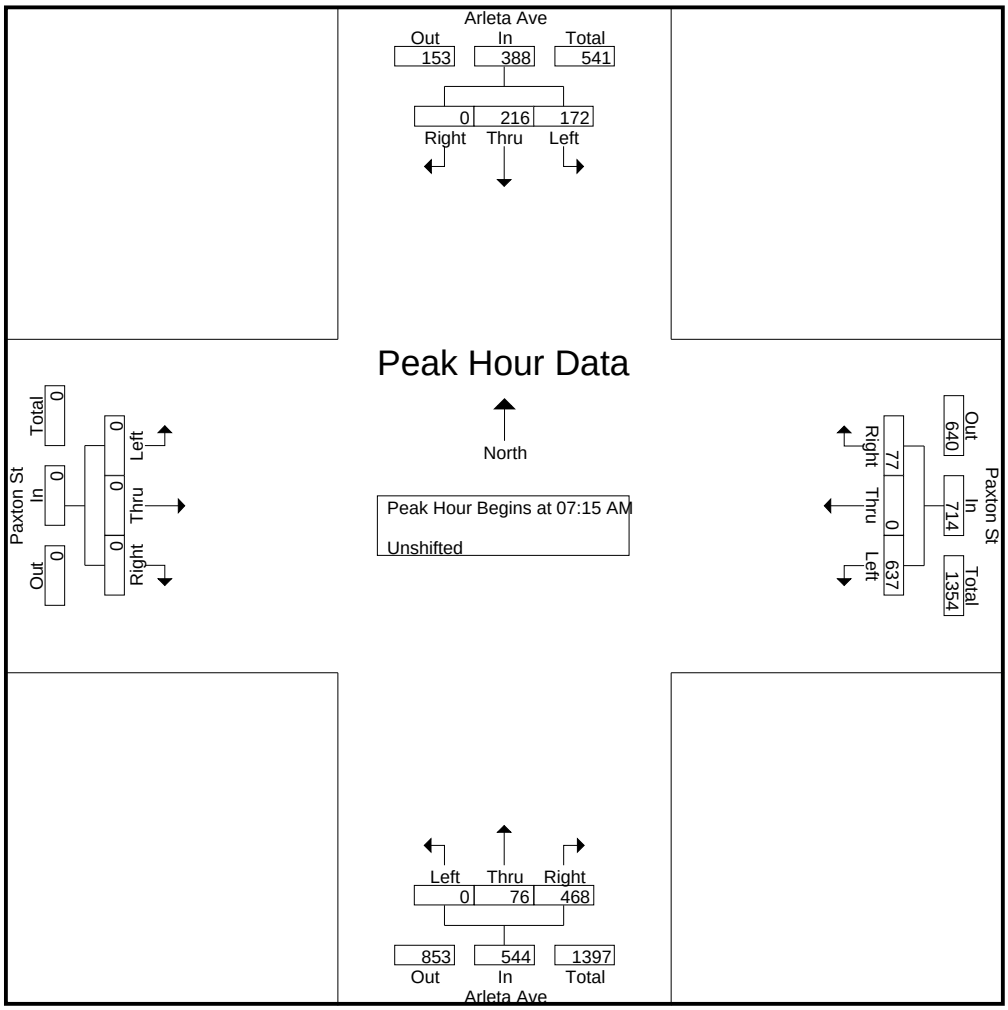

CITY TRAFFIC COUNTERS

626.991.7522

www.ctcounters.com

File Name : ArletaPaxton
Site Code : 00000000
Start Date : 1/14/2014
Page No : 3

	Arleta Ave Southbound				Paxton St Westbound				Arleta Ave Northbound				Paxton St Eastbound				
Start Time	Left	Thru	Right	App. Total	Left	Thru	Right	App. Total	Left	Thru	Right	App. Total	Left	Thru	Right	App. Total	Int. Total
Peak Hour Analysis From 10:00 AM to 01:45 PM - Peak 1 of 1																	
Peak Hour for Entire Intersection Begins at 01:00 PM																	
01:00 PM	22	**17**	0	**39**	60	0	25	85	0	**12**	59	71	0	0	0	0	195
01:15 PM	16	5	0	21	**67**	0	**33**	**100**	0	10	58	68	0	0	0	0	189
01:30 PM	**25**	12	0	37	64	0	31	95	0	7	**87**	94	0	0	0	0	**226**
01:45 PM	18	9	0	27	61	0	17	78	0	12	84	**96**	0	0	0	0	201
Total Volume	81	43	0	124	252	0	106	358	0	41	288	329	0	0	0	0	811
% App. Total	65.3	34.7	0		70.4	0	29.6		0	12.5	87.5		0	0	0		
PHF	.810	.632	.000	.795	.940	.000	.803	.895	.000	.854	.828	.857	.000	.000	.000	.000	.897

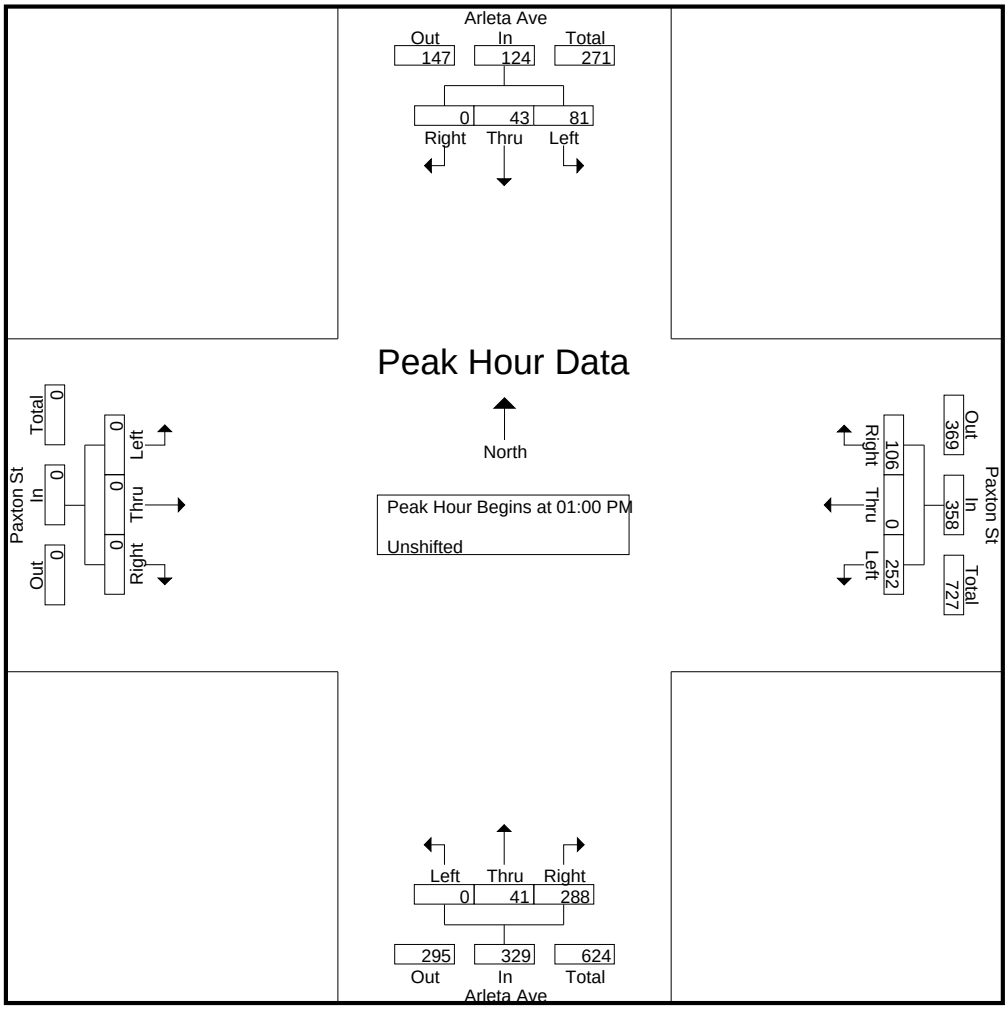

CITY TRAFFIC COUNTERS

626.991.7522

www.ctcounters.com

File Name : ArletaPaxton
Site Code : 00000000
Start Date : 1/14/2014
Page No : 4

	Arleta Ave Southbound				Paxton St Westbound				Arleta Ave Northbound				Paxton St Eastbound				
Start Time	Left	Thru	Right	App. Total	Left	Thru	Right	App. Total	Left	Thru	Right	App. Total	Left	Thru	Right	App. Total	Int. Total
Peak Hour Analysis From 02:00 PM to 05:45 PM - Peak 1 of 1																	
Peak Hour for Entire Intersection Begins at 04:45 PM																	
04:45 PM	18	**17**	0	35	107	0	**35**	**142**	0	37	151	188	0	0	0	0	**365**
05:00 PM	17	15	0	32	97	0	16	113	0	26	133	159	0	0	0	0	304
05:15 PM	**29**	16	0	**45**	93	0	31	124	0	**41**	**155**	**196**	0	0	0	0	365
05:30 PM	18	17	0	35	**120**	0	20	140	0	23	149	172	0	0	0	0	347
Total Volume	82	65	0	147	417	0	102	519	0	127	588	715	0	0	0	0	1381
% App. Total	55.8	44.2	0		80.3	0	19.7		0	17.8	82.2		0	0	0		
PHF	.707	.956	.000	.817	.869	.000	.729	.914	.000	.774	.948	.912	.000	.000	.000	.000	.946

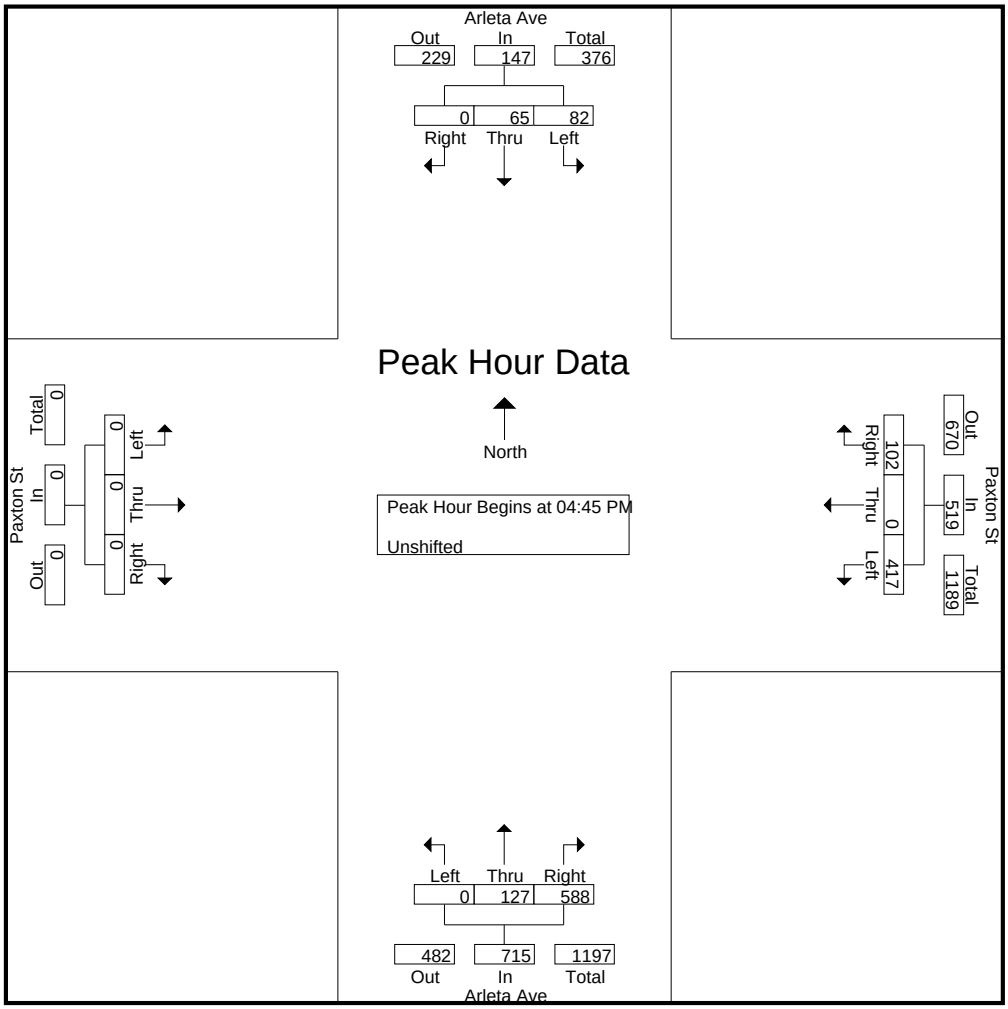

CITY TRAFFIC COUNTERS

626.991.7522

www.ctcounters.com

File Name : ArletaPaxton_MC
Site Code : 00000000
Start Date : 1/14/2014
Page No : 1

Groups Printed- Bank 2

	Arleta Ave Southbound			Paxton St Westbound			Arleta Ave Northbound			Paxton St Eastbound			
Start Time	Left	Thru	Right	Left	Thru	Right	Left	Thru	Right	Left	Thru	Right	Int. Total
07:00 AM	0	1	0	0	0	0	0	0	0	0	0	0	1
07:15 AM	0	1	0	0	0	0	0	0	0	0	0	0	1
07:30 AM	0	0	0	0	0	0	0	1	0	0	0	0	1
07:45 AM	0	0	0	0	0	0	0	0	1	0	0	0	1
Total	0	2	0	0	0	0	0	1	1	0	0	0	4
09:45 AM	0	1	0	0	0	0	0	0	0	0	0	0	1
Total	0	1	0	0	0	0	0	0	0	0	0	0	1
12:30 PM	0	0	0	1	0	0	0	0	0	0	0	0	1
Total	0	0	0	1	0	0	0	0	0	0	0	0	1
04:00 PM	1	0	0	0	0	0	0	0	0	0	0	0	1
04:15 PM	1	0	0	0	0	0	0	0	0	0	0	0	1
04:30 PM	0	0	0	1	0	0	0	0	1	0	0	0	2
04:45 PM	0	0	0	0	0	0	0	0	1	0	0	0	1
Total	2	0	0	1	0	0	0	0	2	0	0	0	5
05:00 PM	0	0	0	0	0	1	0	0	0	0	0	0	1
05:15 PM	0	0	0	1	0	0	0	1	0	0	0	0	2
05:30 PM	0	1	0	1	0	0	0	0	0	0	0	0	2
05:45 PM	0	0	0	0	0	0	0	1	0	0	0	0	1
Total	0	1	0	2	0	1	0	2	0	0	0	0	6
Grand Total	2	4	0	4	0	1	0	3	3	0	0	0	17
Apprch %	33.3	66.7	0	80	0	20	0	50	50	0	0	0	
Total %	11.8	23.5	0	23.5	0	5.9	0	17.6	17.6	0	0	0	

CITY TRAFFIC COUNTERS

626.991.7522

www.ctcounters.com

File Name : ArletaPaxton_MC
Site Code : 00000000
Start Date : 1/14/2014
Page No : 2

	Arleta Ave Southbound				Paxton St Westbound				Arleta Ave Northbound				Paxton St Eastbound				
Start Time	Left	Thru	Right	App. Total	Left	Thru	Right	App. Total	Left	Thru	Right	App. Total	Left	Thru	Right	App. Total	Int. Total
Peak Hour Analysis From 07:00 AM to 09:45 AM - Peak 1 of 1																	
Peak Hour for Entire Intersection Begins at 07:00 AM																	
07:00 AM	0	**1**	0	**1**	0	0	0	0	0	0	0	0	0	0	0	0	**1**
07:15 AM	0	1	0	1	0	0	0	0	0	0	0	0	0	0	0	0	1
07:30 AM	0	0	0	0	0	0	0	0	0	**1**	0	**1**	0	0	0	0	1
07:45 AM	0	0	0	0	0	0	0	0	0	0	**1**	1	0	0	0	0	1
Total Volume	0	2	0	2	0	0	0	0	0	1	1	2	0	0	0	0	4
% App. Total	0	100	0		0	0	0		0	50	50		0	0	0		
PHF	.000	.500	.000	.500	.000	.000	.000	.000	.000	.250	.250	.500	.000	.000	.000	.000	1.00

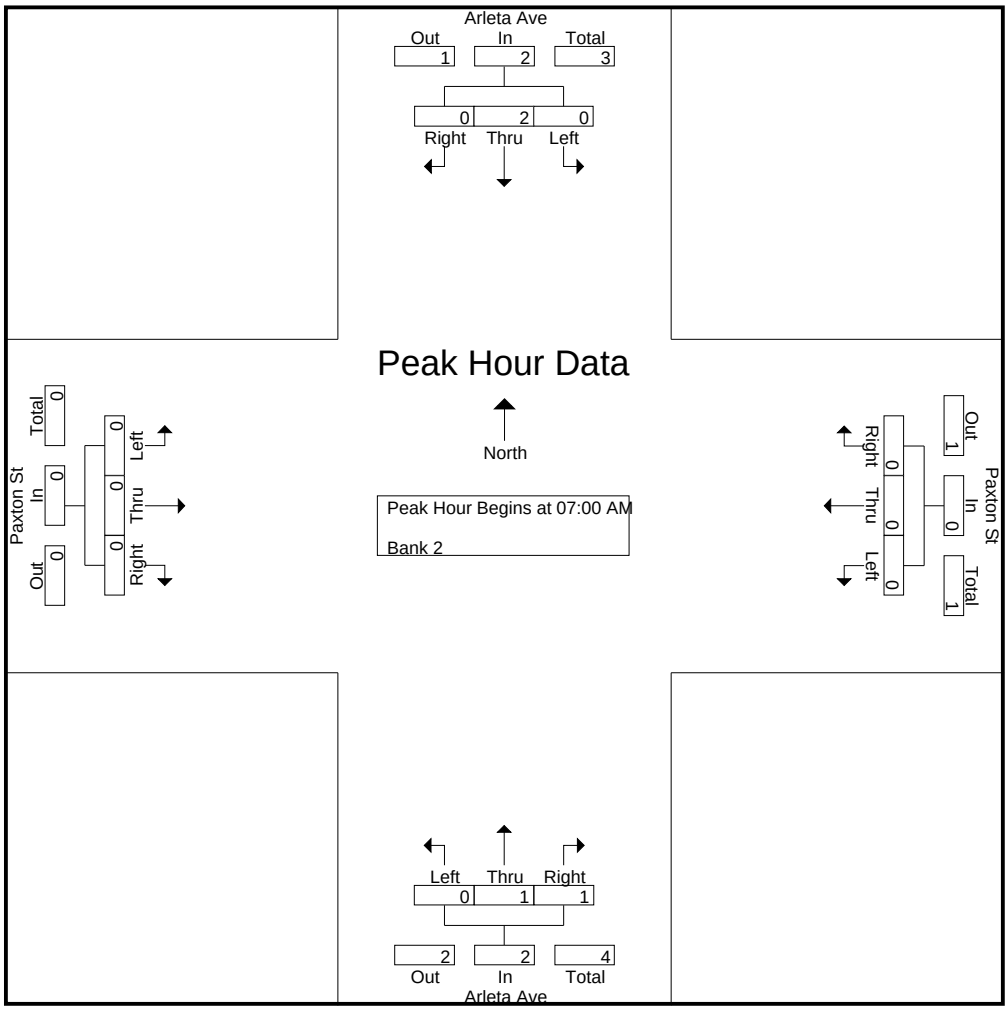

CITY TRAFFIC COUNTERS

626.991.7522

www.ctcounters.com

File Name : ArletaPaxton_MC
Site Code : 00000000
Start Date : 1/14/2014
Page No : 3

	Arleta Ave Southbound				Paxton St Westbound				Arleta Ave Northbound				Paxton St Eastbound				
Start Time	Left	Thru	Right	App. Total	Left	Thru	Right	App. Total	Left	Thru	Right	App. Total	Left	Thru	Right	App. Total	Int. Total
Peak Hour Analysis From 10:00 AM to 01:45 PM - Peak 1 of 1																	
Peak Hour for Entire Intersection Begins at 11:45 AM																	
11:45 AM	0	0	0	0	0	0	0	0	0	0	0	0	0	0	0	0	0
12:00 PM	0	0	0	0	0	0	0	0	0	0	0	0	0	0	0	0	0
12:15 PM	0	0	0	0	0	0	0	0	0	0	0	0	0	0	0	0	0
12:30 PM	0	0	0	0	**1**	0	0	**1**	0	0	0	0	0	0	0	0	**1**
Total Volume	0	0	0	0	1	0	0	1	0	0	0	0	0	0	0	0	1
% App. Total	0	0	0		100	0	0		0	0	0		0	0	0		
PHF	.000	.000	.000	.000	.250	.000	.000	.250	.000	.000	.000	.000	.000	.000	.000	.000	.250

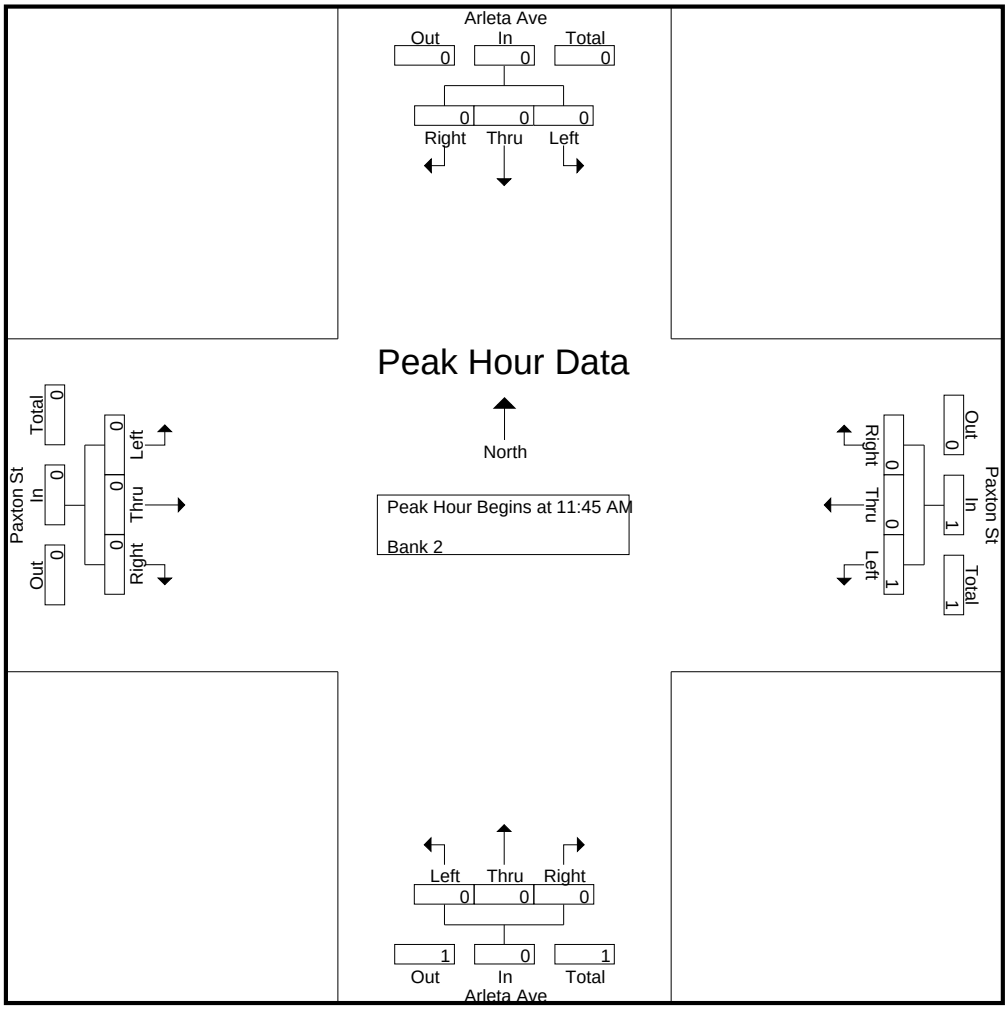

CITY TRAFFIC COUNTERS

626.991.7522

www.ctcounters.com

File Name : ArletaPaxton_MC
Site Code : 00000000
Start Date : 1/14/2014
Page No : 4

	Arleta Ave Southbound				Paxton St Westbound				Arleta Ave Northbound				Paxton St Eastbound				
Start Time	Left	Thru	Right	App. Total	Left	Thru	Right	App. Total	Left	Thru	Right	App. Total	Left	Thru	Right	App. Total	Int. Total
Peak Hour Analysis From 02:00 PM to 05:45 PM - Peak 1 of 1																	
Peak Hour for Entire Intersection Begins at 04:30 PM																	
04:30 PM	0	0	0	0	**1**	0	0	**1**	0	0	**1**	**1**	0	0	0	0	**2**
04:45 PM	0	0	0	0	0	0	0	0	0	0	1	1	0	0	0	0	1
05:00 PM	0	0	0	0	0	0	**1**	1	0	0	0	0	0	0	0	0	1
05:15 PM	0	0	0	0	1	0	0	1	0	**1**	0	1	0	0	0	0	2
Total Volume	0	0	0	0	2	0	1	3	0	1	2	3	0	0	0	0	6
% App. Total	0	0	0		66.7	0	33.3		0	33.3	66.7		0	0	0		
PHF	.000	.000	.000	.000	.500	.000	.250	.750	.000	.250	.500	.750	.000	.000	.000	.000	.750

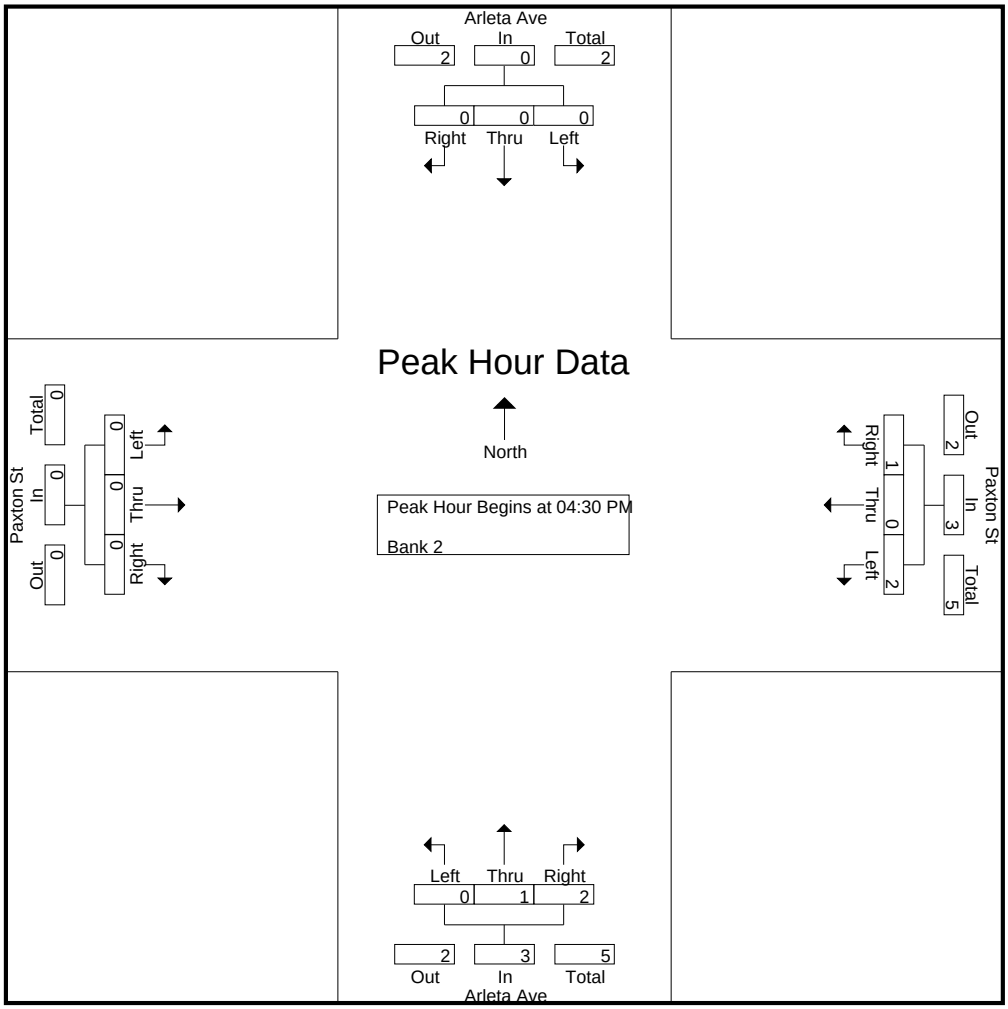

CITY TRAFFIC COUNTERS

626.991.7522

www.ctcounters.com

File Name : ArletaPaxton_Bus
Site Code : 00000000
Start Date : 1/14/2014
Page No : 1

Groups Printed- Bank 1

	Arleta Ave Southbound			Paxton St Westbound			Arleta Ave Northbound			Paxton St Eastbound			
Start Time	Left	Thru	Right	Left	Thru	Right	Left	Thru	Right	Left	Thru	Right	Int. Total
07:00 AM	0	1	0	1	0	0	0	0	1	0	0	0	3
07:15 AM	0	1	0	1	0	0	0	0	1	0	0	0	3
07:30 AM	0	0	0	2	0	0	0	0	0	0	0	0	2
Total	0	2	0	4	0	0	0	0	2	0	0	0	8
08:00 AM	0	0	0	2	0	0	0	0	1	0	0	0	3
08:15 AM	0	2	0	1	0	0	0	0	0	0	0	0	3
08:30 AM	0	1	0	1	0	0	0	0	0	0	0	0	2
08:45 AM	0	0	0	0	0	1	0	0	3	0	0	0	4
Total	0	3	0	4	0	1	0	0	4	0	0	0	12
09:00 AM	0	0	0	0	0	0	0	0	4	0	0	0	4
09:15 AM	0	0	0	0	0	0	0	0	5	0	0	0	5
09:30 AM	0	0	0	1	0	0	0	0	1	0	0	0	2
Total	0	0	0	1	0	0	0	0	10	0	0	0	11
12:15 PM	0	0	0	1	0	0	0	0	1	0	0	0	2
12:30 PM	0	0	0	1	0	0	0	0	0	0	0	0	1
12:45 PM	0	0	0	1	0	0	0	0	1	0	0	0	2
Total	0	0	0	3	0	0	0	0	2	0	0	0	5
01:15 PM	0	0	0	1	0	0	0	0	0	0	0	0	1
01:45 PM	0	0	0	0	0	0	0	1	1	0	0	0	2
Total	0	0	0	1	0	0	0	1	1	0	0	0	3
03:00 PM	0	0	0	1	0	0	0	0	2	0	0	0	3
03:15 PM	0	0	0	1	0	0	0	0	3	0	0	0	4
03:30 PM	1	0	0	0	0	0	0	0	5	0	0	0	6
03:45 PM	0	0	0	0	0	0	0	0	2	0	0	0	2
Total	1	0	0	2	0	0	0	0	12	0	0	0	15
04:00 PM	0	0	0	0	0	0	0	0	2	0	0	0	2
04:15 PM	0	0	0	0	0	0	0	1	2	0	0	0	3
04:30 PM	0	0	0	0	0	0	0	0	2	0	0	0	2
Total	0	0	0	0	0	0	0	1	6	0	0	0	7
05:00 PM	1	0	0	0	0	0	0	0	0	0	0	0	1
05:15 PM	0	0	0	0	0	0	0	0	3	0	0	0	3
05:30 PM	0	0	0	1	0	0	0	0	0	0	0	0	1
Total	1	0	0	1	0	0	0	0	3	0	0	0	5
Grand Total	2	5	0	16	0	1	0	2	40	0	0	0	66
Apprch %	28.6	71.4	0	94.1	0	5.9	0	4.8	95.2	0	0	0	
Total %	3	7.6	0	24.2	0	1.5	0	3	60.6	0	0	0	

CITY TRAFFIC COUNTERS

626.991.7522

www.ctcounters.com

File Name : ArletaPaxton_Bus
Site Code : 00000000
Start Date : 1/14/2014
Page No : 2

	Arleta Ave Southbound				Paxton St Westbound				Arleta Ave Northbound				Paxton St Eastbound				
Start Time	Left	Thru	Right	App. Total	Left	Thru	Right	App. Total	Left	Thru	Right	App. Total	Left	Thru	Right	App. Total	Int. Total
Peak Hour Analysis From 07:00 AM to 09:45 AM - Peak 1 of 1																	
Peak Hour for Entire Intersection Begins at 08:30 AM																	
08:30 AM	0	**1**	0	**1**	**1**	0	0	**1**	0	0	0	0	0	0	0	0	2
08:45 AM	0	0	0	0	0	0	**1**	1	0	0	3	3	0	0	0	0	4
09:00 AM	0	0	0	0	0	0	0	0	0	0	4	4	0	0	0	0	4
09:15 AM	0	0	0	0	0	0	0	0	0	0	**5**	**5**	0	0	0	0	**5**
Total Volume	0	1	0	1	1	0	1	2	0	0	12	12	0	0	0	0	15
% App. Total	0	100	0		50	0	50		0	0	100		0	0	0		
PHF	.000	.250	.000	.250	.250	.000	.250	.500	.000	.000	.600	.600	.000	.000	.000	.000	.750

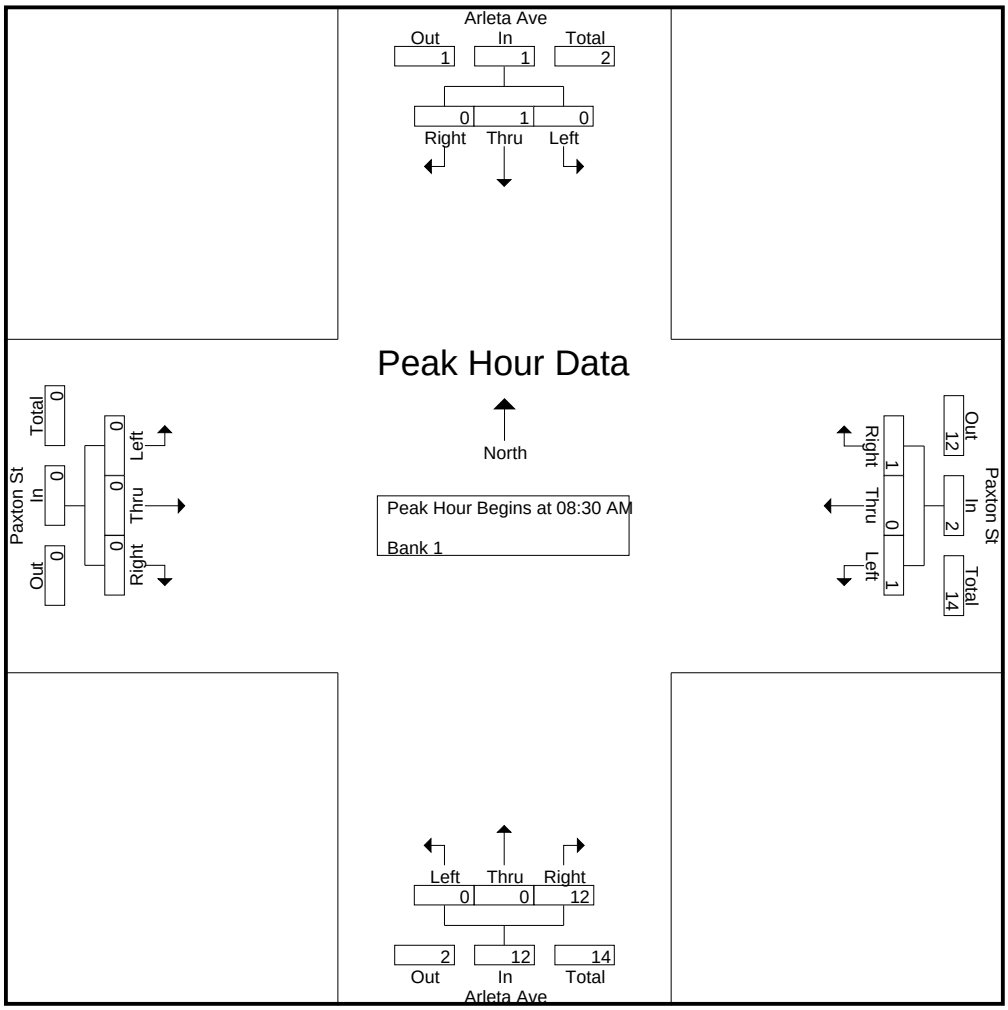

CITY TRAFFIC COUNTERS

626.991.7522

www.ctcounters.com

File Name : ArletaPaxton_Bus
Site Code : 00000000
Start Date : 1/14/2014
Page No : 3

	Arleta Ave Southbound				Paxton St Westbound				Arleta Ave Northbound				Paxton St Eastbound				
Start Time	Left	Thru	Right	App. Total	Left	Thru	Right	App. Total	Left	Thru	Right	App. Total	Left	Thru	Right	App. Total	Int. Total
Peak Hour Analysis From 10:00 AM to 01:45 PM - Peak 1 of 1																	
Peak Hour for Entire Intersection Begins at 12:00 PM																	
12:00 PM	0	0	0	0	0	0	0	0	0	0	0	0	0	0	0	0	0
12:15 PM	0	0	0	0	**1**	0	0	**1**	0	0	**1**	**1**	0	0	0	0	**2**
12:30 PM	0	0	0	0	1	0	0	1	0	0	0	0	0	0	0	0	1
12:45 PM	0	0	0	0	1	0	0	1	0	0	1	1	0	0	0	0	2
Total Volume	0	0	0	0	3	0	0	3	0	0	2	2	0	0	0	0	5
% App. Total	0	0	0		100	0	0		0	0	100		0	0	0		
PHF	.000	.000	.000	.000	.750	.000	.000	.750	.000	.000	.500	.500	.000	.000	.000	.000	.625

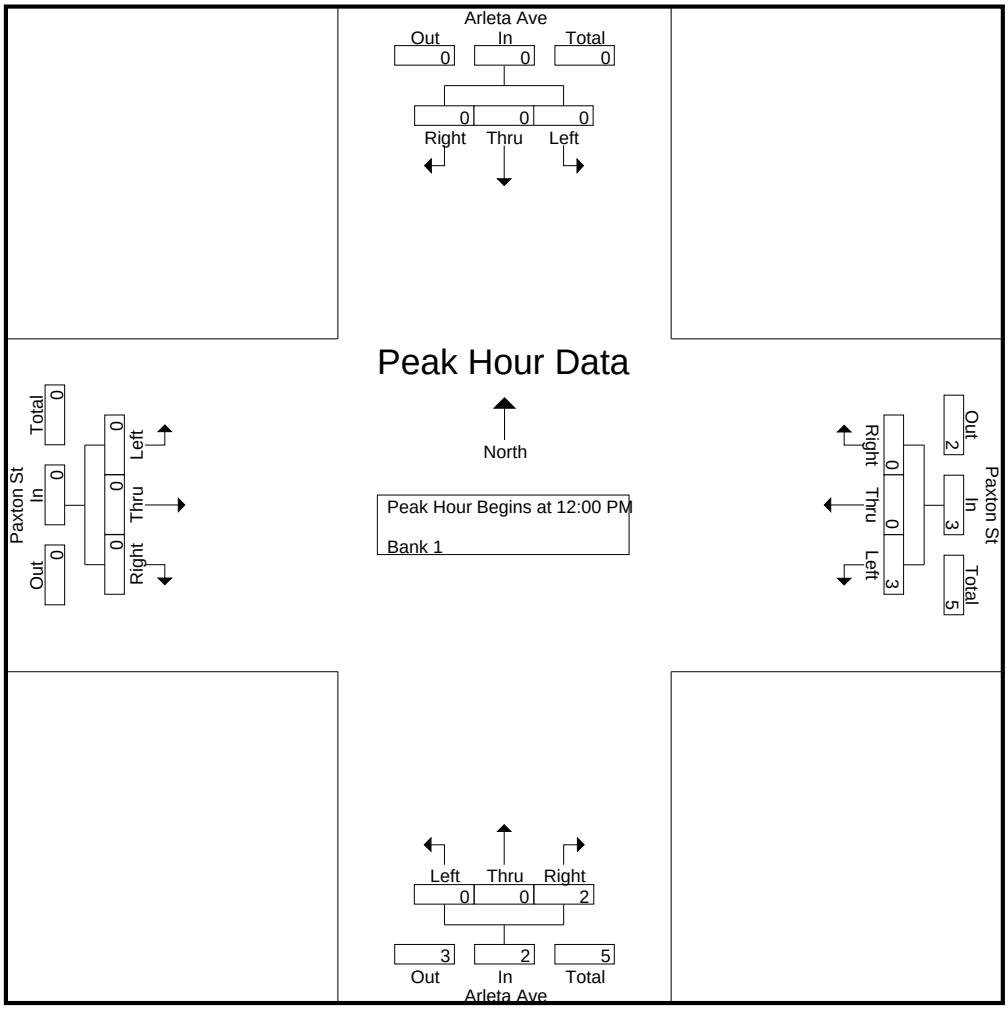

CITY TRAFFIC COUNTERS

626.991.7522

www.ctcounters.com

File Name : ArletaPaxton_Bus
Site Code : 00000000
Start Date : 1/14/2014
Page No : 4

	Arleta Ave Southbound				Paxton St Westbound				Arleta Ave Northbound				Paxton St Eastbound				
Start Time	Left	Thru	Right	App. Total	Left	Thru	Right	App. Total	Left	Thru	Right	App. Total	Left	Thru	Right	App. Total	Int. Total
Peak Hour Analysis From 02:00 PM to 05:45 PM - Peak 1 of 1																	
Peak Hour for Entire Intersection Begins at 03:00 PM																	
03:00 PM	0	0	0	0	**1**	0	0	**1**	0	0	2	2	0	0	0	0	3
03:15 PM	0	0	0	0	1	0	0	1	0	0	3	3	0	0	0	0	4
03:30 PM	**1**	0	0	**1**	0	0	0	0	0	0	**5**	**5**	0	0	0	0	**6**
03:45 PM	0	0	0	0	0	0	0	0	0	0	2	2	0	0	0	0	2
Total Volume	1	0	0	1	2	0	0	2	0	0	12	12	0	0	0	0	15
% App. Total	100	0	0		100	0	0		0	0	100		0	0	0		
PHF	.250	.000	.000	.250	.500	.000	.000	.500	.000	.000	.600	.600	.000	.000	.000	.000	.625

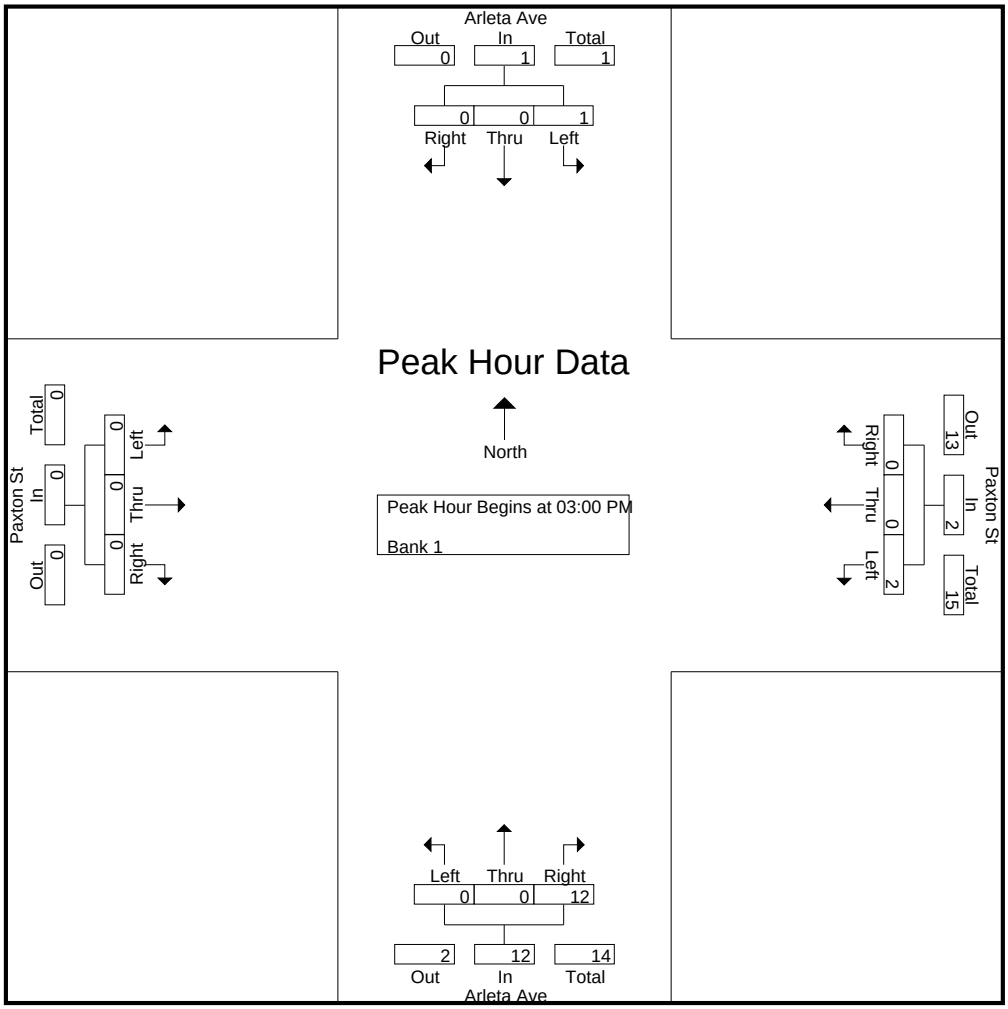

CITY TRAFFIC COUNTERS

626.991.7522

www.ctcounters.com

File Name : arletapaxton_2axle
Site Code : 00000000
Start Date : 1/14/2014
Page No : 1

Groups Printed- Bank 1

	Arleta Ave Southbound			Paxton St Westbound			Arleta Ave Northbound			Paxton St Eastbound			
Start Time	Left	Thru	Right	Left	Thru	Right	Left	Thru	Right	Left	Thru	Right	Int. Total
07:00 AM	1	0	0	1	0	0	0	0	1	0	0	0	3
07:30 AM	0	1	0	0	0	1	0	0	0	0	0	0	2
Total	1	1	0	1	0	1	0	0	1	0	0	0	5
08:00 AM	0	0	0	1	0	0	0	0	1	0	0	0	2
08:15 AM	0	0	0	3	0	0	0	2	2	0	0	0	7
08:30 AM	1	4	0	1	0	0	0	0	0	0	0	0	6
Total	1	4	0	5	0	0	0	2	3	0	0	0	15
09:00 AM	0	0	0	1	0	0	0	2	1	0	0	0	4
09:15 AM	0	0	0	0	0	0	0	0	1	0	0	0	1
09:30 AM	0	0	0	1	0	0	0	0	1	0	0	0	2
09:45 AM	0	1	0	0	0	0	0	0	1	0	0	0	2
Total	0	1	0	2	0	0	0	2	4	0	0	0	9
12:00 PM	1	0	0	1	0	0	0	0	1	0	0	0	3
12:15 PM	0	0	0	1	0	0	0	1	0	0	0	0	2
12:45 PM	0	0	0	0	0	0	0	0	1	0	0	0	1
Total	1	0	0	2	0	0	0	1	2	0	0	0	6
01:15 PM	0	0	0	0	0	0	0	1	2	0	0	0	3
01:30 PM	0	0	0	1	0	0	0	1	2	0	0	0	4
01:45 PM	0	0	0	1	0	0	0	2	1	0	0	0	4
Total	0	0	0	2	0	0	0	4	5	0	0	0	11
03:00 PM	1	1	0	2	0	0	0	0	1	0	0	0	5
03:15 PM	0	0	0	1	0	0	0	0	2	0	0	0	3
03:45 PM	0	0	0	0	0	0	0	1	2	0	0	0	3
Total	1	1	0	3	0	0	0	1	5	0	0	0	11
04:00 PM	0	2	0	0	0	0	0	0	0	0	0	0	2
04:15 PM	0	0	0	0	0	0	0	1	1	0	0	0	2
04:30 PM	0	1	0	0	0	0	0	0	2	0	0	0	3
04:45 PM	0	1	0	1	0	0	0	0	1	0	0	0	3
Total	0	4	0	1	0	0	0	1	4	0	0	0	10
05:00 PM	0	0	0	1	0	0	0	0	3	0	0	0	4
05:30 PM	0	0	0	0	0	0	0	1	2	0	0	0	3
05:45 PM	0	0	0	1	0	0	0	0	2	0	0	0	3
Total	0	0	0	2	0	0	0	1	7	0	0	0	10
Grand Total	4	11	0	18	0	1	0	12	31	0	0	0	77
Apprch %	26.7	73.3	0	94.7	0	5.3	0	27.9	72.1	0	0	0	
Total %	5.2	14.3	0	23.4	0	1.3	0	15.6	40.3	0	0	0	

CITY TRAFFIC COUNTERS

626.991.7522

www.ctcounters.com

File Name : arletapaxton_2axle
Site Code : 00000000
Start Date : 1/14/2014
Page No : 2

	Arleta Ave Southbound				Paxton St Westbound				Arleta Ave Northbound				Paxton St Eastbound				
Start Time	Left	Thru	Right	App. Total	Left	Thru	Right	App. Total	Left	Thru	Right	App. Total	Left	Thru	Right	App. Total	Int. Total
Peak Hour Analysis From 07:00 AM to 09:45 AM - Peak 1 of 1																	
Peak Hour for Entire Intersection Begins at 08:15 AM																	
08:15 AM	0	0	0	0	**3**	0	0	**3**	0	**2**	**2**	**4**	0	0	0	0	**7**
08:30 AM	**1**	**4**	0	**5**	1	0	0	1	0	0	0	0	0	0	0	0	6
08:45 AM	0	0	0	0	0	0	0	0	0	0	0	0	0	0	0	0	0
09:00 AM	0	0	0	0	1	0	0	1	0	2	1	3	0	0	0	0	4
Total Volume	1	4	0	5	5	0	0	5	0	4	3	7	0	0	0	0	17
% App. Total	20	80	0		100	0	0		0	57.1	42.9		0	0	0		
PHF	.250	.250	.000	.250	.417	.000	.000	.417	.000	.500	.375	.438	.000	.000	.000	.000	.607

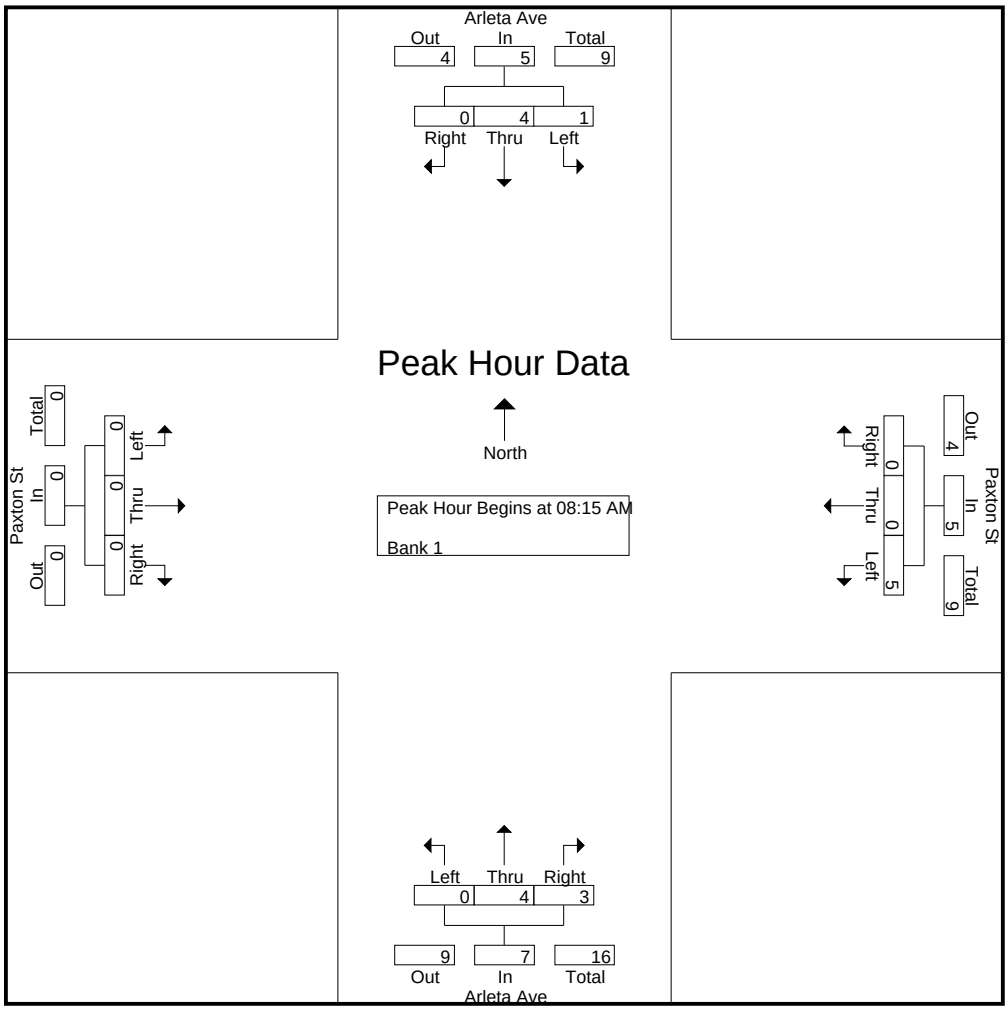

CITY TRAFFIC COUNTERS

626.991.7522

www.ctcounters.com

File Name : arletapaxton_2axle
Site Code : 00000000
Start Date : 1/14/2014
Page No : 3

	Arleta Ave Southbound				Paxton St Westbound				Arleta Ave Northbound				Paxton St Eastbound				
Start Time	Left	Thru	Right	App. Total	Left	Thru	Right	App. Total	Left	Thru	Right	App. Total	Left	Thru	Right	App. Total	Int. Total
Peak Hour Analysis From 10:00 AM to 01:45 PM - Peak 1 of 1																	
Peak Hour for Entire Intersection Begins at 01:00 PM																	
01:00 PM	0	0	0	0	0	0	0	0	0	0	0	0	0	0	0	0	0
01:15 PM	0	0	0	0	0	0	0	0	0	1	**2**	**3**	0	0	0	0	3
01:30 PM	0	0	0	0	**1**	0	0	**1**	0	1	2	3	0	0	0	0	**4**
01:45 PM	0	0	0	0	1	0	0	1	0	**2**	1	3	0	0	0	0	4
Total Volume	0	0	0	0	2	0	0	2	0	4	5	9	0	0	0	0	11
% App. Total	0	0	0		100	0	0		0	44.4	55.6		0	0	0		
PHF	.000	.000	.000	.000	.500	.000	.000	.500	.000	.500	.625	.750	.000	.000	.000	.000	.688

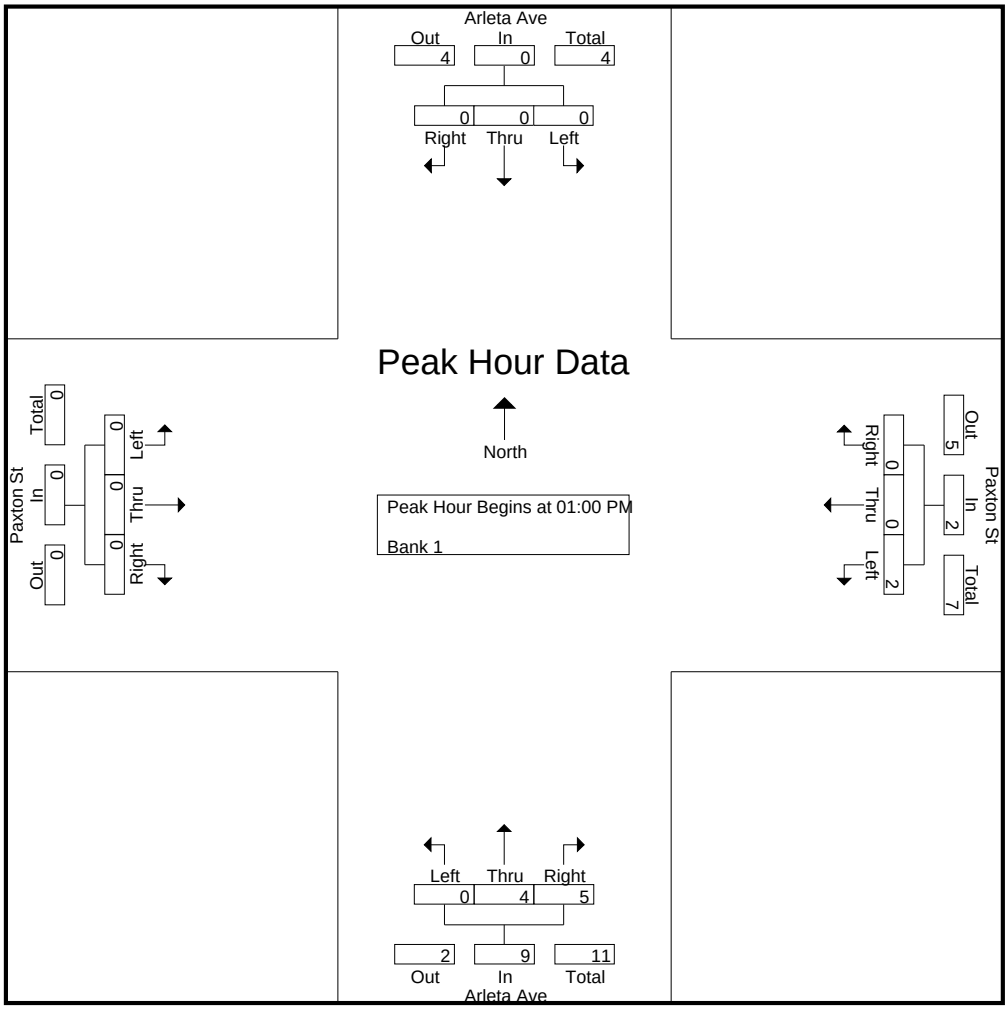

CITY TRAFFIC COUNTERS

626.991.7522

www.ctcounters.com

File Name : arletapaxton_2axle
Site Code : 00000000
Start Date : 1/14/2014
Page No : 4

	Arleta Ave Southbound				Paxton St Westbound				Arleta Ave Northbound				Paxton St Eastbound				
Start Time	Left	Thru	Right	App. Total	Left	Thru	Right	App. Total	Left	Thru	Right	App. Total	Left	Thru	Right	App. Total	Int. Total
Peak Hour Analysis From 02:00 PM to 05:45 PM - Peak 1 of 1																	
Peak Hour for Entire Intersection Begins at 04:15 PM																	
04:15 PM	0	0	0	0	0	0	0	0	0	**1**	1	2	0	0	0	0	2
04:30 PM	0	**1**	0	**1**	0	0	0	0	0	0	2	2	0	0	0	0	3
04:45 PM	0	1	0	1	**1**	0	0	**1**	0	0	1	1	0	0	0	0	3
05:00 PM	0	0	0	0	1	0	0	1	0	0	**3**	**3**	0	0	0	0	**4**
Total Volume	0	2	0	2	2	0	0	2	0	1	7	8	0	0	0	0	12
% App. Total	0	100	0		100	0	0		0	12.5	87.5		0	0	0		
PHF	.000	.500	.000	.500	.500	.000	.000	.500	.000	.250	.583	.667	.000	.000	.000	.000	.750

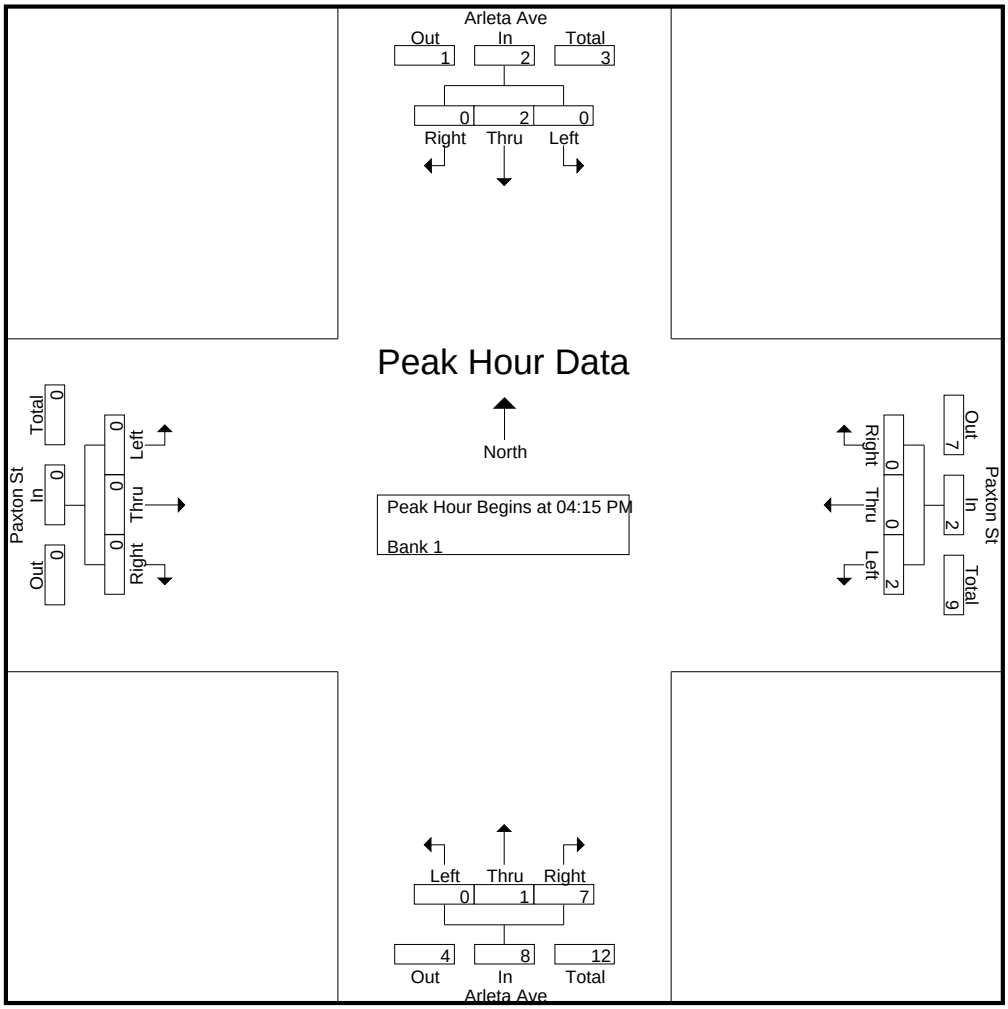

CITY TRAFFIC COUNTERS

626.991.7522

www.ctcounters.com

File Name : arletapaxton_3axle
Site Code : 00000000
Start Date : 1/14/2014
Page No : 1

Groups Printed- Bank 2

	Arleta Ave Southbound			Paxton St Westbound			Arleta Ave Northbound			Paxton St Eastbound			
Start Time	Left	Thru	Right	Left	Thru	Right	Left	Thru	Right	Left	Thru	Right	Int. Total
07:00 AM	0	0	0	0	0	0	0	0	2	0	0	0	2
07:15 AM	0	0	0	1	0	0	0	0	1	0	0	0	2
07:30 AM	0	0	0	1	0	0	0	0	0	0	0	0	1
Total	0	0	0	2	0	0	0	0	3	0	0	0	5
08:30 AM	0	0	0	2	0	0	0	0	0	0	0	0	2
Total	0	0	0	2	0	0	0	0	0	0	0	0	2
12:30 PM	0	0	0	1	0	0	0	0	0	0	0	0	1
12:45 PM	0	0	0	1	0	0	0	0	0	0	0	0	1
Total	0	0	0	2	0	0	0	0	0	0	0	0	2
01:00 PM	0	0	0	0	0	0	0	0	1	0	0	0	1
Total	0	0	0	0	0	0	0	0	1	0	0	0	1
03:00 PM	0	0	0	1	0	0	0	0	0	0	0	0	1
03:15 PM	0	0	0	1	0	0	0	0	0	0	0	0	1
Total	0	0	0	2	0	0	0	0	0	0	0	0	2
04:45 PM	0	0	0	1	0	0	0	0	0	0	0	0	1
Total	0	0	0	1	0	0	0	0	0	0	0	0	1
Grand Total	0	0	0	9	0	0	0	0	4	0	0	0	13
Apprch %	0	0	0	100	0	0	0	0	100	0	0	0	
Total %	0	0	0	69.2	0	0	0	0	30.8	0	0	0	

CITY TRAFFIC COUNTERS

626.991.7522

www.ctcounters.com

File Name : arletapaxton_3axle
Site Code : 00000000
Start Date : 1/14/2014
Page No : 2

	Arleta Ave Southbound				Paxton St Westbound				Arleta Ave Northbound				Paxton St Eastbound				
Start Time	Left	Thru	Right	App. Total	Left	Thru	Right	App. Total	Left	Thru	Right	App. Total	Left	Thru	Right	App. Total	Int. Total
Peak Hour Analysis From 07:00 AM to 09:45 AM - Peak 1 of 1																	
Peak Hour for Entire Intersection Begins at 07:00 AM																	
07:00 AM	0	0	0	0	0	0	0	0	0	0	**2**	**2**	0	0	0	0	**2**
07:15 AM	0	0	0	0	**1**	0	0	**1**	0	0	1	1	0	0	0	0	2
07:30 AM	0	0	0	0	1	0	0	1	0	0	0	0	0	0	0	0	1
07:45 AM	0	0	0	0	0	0	0	0	0	0	0	0	0	0	0	0	0
Total Volume	0	0	0	0	2	0	0	2	0	0	3	3	0	0	0	0	5
% App. Total	0	0	0		100	0	0		0	0	100		0	0	0		
PHF	.000	.000	.000	.000	.500	.000	.000	.500	.000	.000	.375	.375	.000	.000	.000	.000	.625

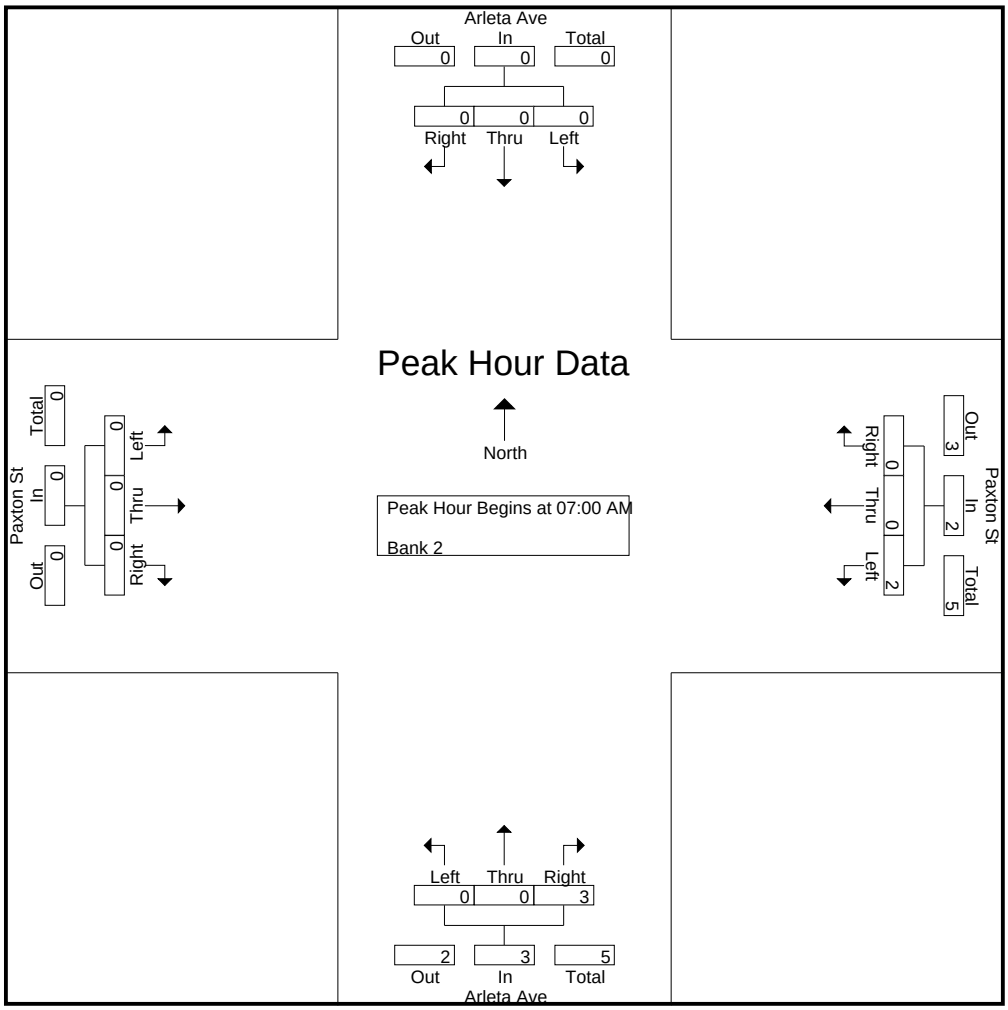

CITY TRAFFIC COUNTERS

626.991.7522

www.ctcounters.com

File Name : arletapaxton_3axle
Site Code : 00000000
Start Date : 1/14/2014
Page No : 3

	Arleta Ave Southbound				Paxton St Westbound				Arleta Ave Northbound				Paxton St Eastbound				
Start Time	Left	Thru	Right	App. Total	Left	Thru	Right	App. Total	Left	Thru	Right	App. Total	Left	Thru	Right	App. Total	Int. Total
Peak Hour Analysis From 10:00 AM to 01:45 PM - Peak 1 of 1																	
Peak Hour for Entire Intersection Begins at 12:15 PM																	
12:15 PM	0	0	0	0	0	0	0	0	0	0	0	0	0	0	0	0	0
12:30 PM	0	0	0	0	**1**	0	0	**1**	0	0	0	0	0	0	0	0	**1**
12:45 PM	0	0	0	0	1	0	0	1	0	0	0	0	0	0	0	0	1
01:00 PM	0	0	0	0	0	0	0	0	0	0	**1**	**1**	0	0	0	0	1
Total Volume	0	0	0	0	2	0	0	2	0	0	1	1	0	0	0	0	3
% App. Total	0	0	0		100	0	0		0	0	100		0	0	0		
PHF	.000	.000	.000	.000	.500	.000	.000	.500	.000	.000	.250	.250	.000	.000	.000	.000	.750

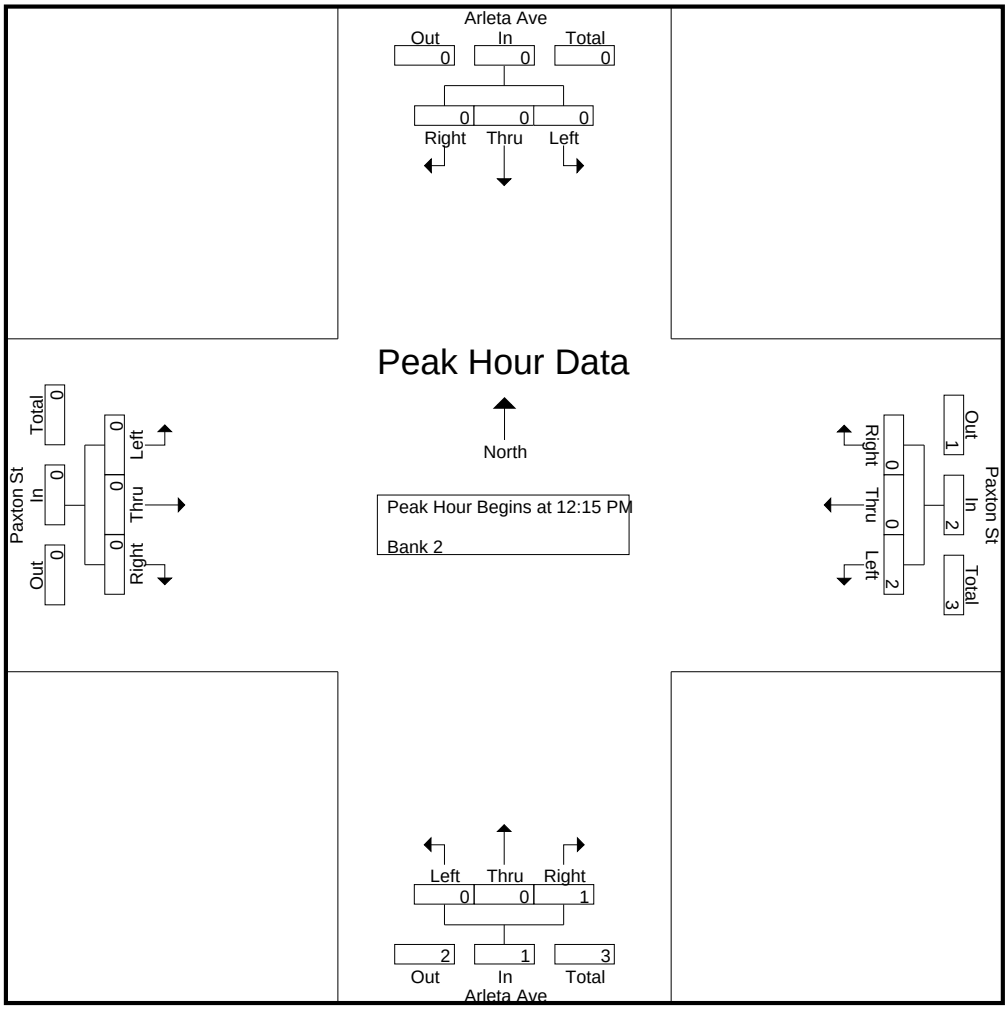

CITY TRAFFIC COUNTERS

626.991.7522

www.ctcounters.com

File Name : arletapaxton_3axle
Site Code : 00000000
Start Date : 1/14/2014
Page No : 4

	Arleta Ave Southbound				Paxton St Westbound				Arleta Ave Northbound				Paxton St Eastbound				
Start Time	Left	Thru	Right	App. Total	Left	Thru	Right	App. Total	Left	Thru	Right	App. Total	Left	Thru	Right	App. Total	Int. Total
Peak Hour Analysis From 02:00 PM to 05:45 PM - Peak 1 of 1																	
Peak Hour for Entire Intersection Begins at 02:30 PM																	
02:30 PM	0	0	0	0	0	0	0	0	0	0	0	0	0	0	0	0	0
02:45 PM	0	0	0	0	0	0	0	0	0	0	0	0	0	0	0	0	0
03:00 PM	0	0	0	0	**1**	0	0	**1**	0	0	0	0	0	0	0	0	**1**
03:15 PM	0	0	0	0	1	0	0	1	0	0	0	0	0	0	0	0	1
Total Volume	0	0	0	0	2	0	0	2	0	0	0	0	0	0	0	0	2
% App. Total	0	0	0		100	0	0		0	0	0		0	0	0		
PHF	.000	.000	.000	.000	.500	.000	.000	.500	.000	.000	.000	.000	.000	.000	.000	.000	.500

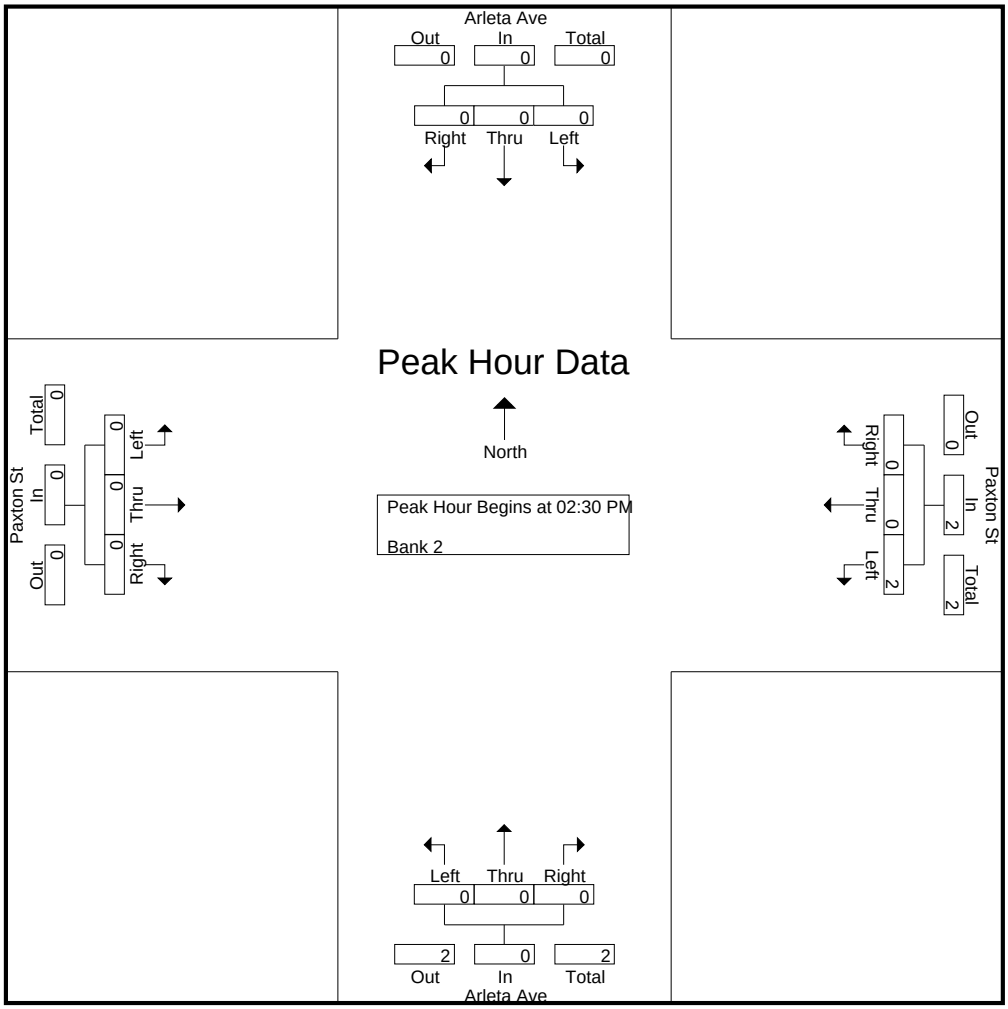

CITY TRAFFIC COUNTERS

626.991.7522

www.ctcounters.com

File Name : arletapaxton_4axle
Site Code : 00000000
Start Date : 1/14/2014
Page No : 1

Groups Printed- Bank 1

	Arleta Ave Southbound			Paxton St Westbound			Arleta Ave Northbound			Paxton St Eastbound			
Start Time	Left	Thru	Right	Left	Thru	Right	Left	Thru	Right	Left	Thru	Right	Int. Total
07:00 AM	0	0	0	1	0	0	0	0	0	0	0	0	1
07:30 AM	0	0	0	0	0	1	0	0	0	0	0	0	1
Total	0	0	0	1	0	1	0	0	0	0	0	0	2
08:30 AM	1	0	0	0	0	0	0	0	0	0	0	0	1
Total	1	0	0	0	0	0	0	0	0	0	0	0	1
Grand Total	1	0	0	1	0	1	0	0	0	0	0	0	3
Apprch %	100	0	0	50	0	50	0	0	0	0	0	0	
Total %	33.3	0	0	33.3	0	33.3	0	0	0	0	0	0	

CITY TRAFFIC COUNTERS

626.991.7522

www.ctcounters.com

File Name : arletapaxton_4axle
Site Code : 00000000
Start Date : 1/14/2014
Page No : 2

	Arleta Ave Southbound				Paxton St Westbound				Arleta Ave Northbound				Paxton St Eastbound				
Start Time	Left	Thru	Right	App. Total	Left	Thru	Right	App. Total	Left	Thru	Right	App. Total	Left	Thru	Right	App. Total	Int. Total
Peak Hour Analysis From 07:00 AM to 09:45 AM - Peak 1 of 1																	
Peak Hour for Entire Intersection Begins at 07:00 AM																	
07:00 AM	0	0	0	0	**1**	0	0	**1**	0	0	0	0	0	0	0	0	**1**
07:15 AM	0	0	0	0	0	0	0	0	0	0	0	0	0	0	0	0	0
07:30 AM	0	0	0	0	0	0	**1**	1	0	0	0	0	0	0	0	0	1
07:45 AM	0	0	0	0	0	0	0	0	0	0	0	0	0	0	0	0	0
Total Volume	0	0	0	0	1	0	1	2	0	0	0	0	0	0	0	0	2
% App. Total	0	0	0		50	0	50		0	0	0		0	0	0		
PHF	.000	.000	.000	.000	.250	.000	.250	.500	.000	.000	.000	.000	.000	.000	.000	.000	.500

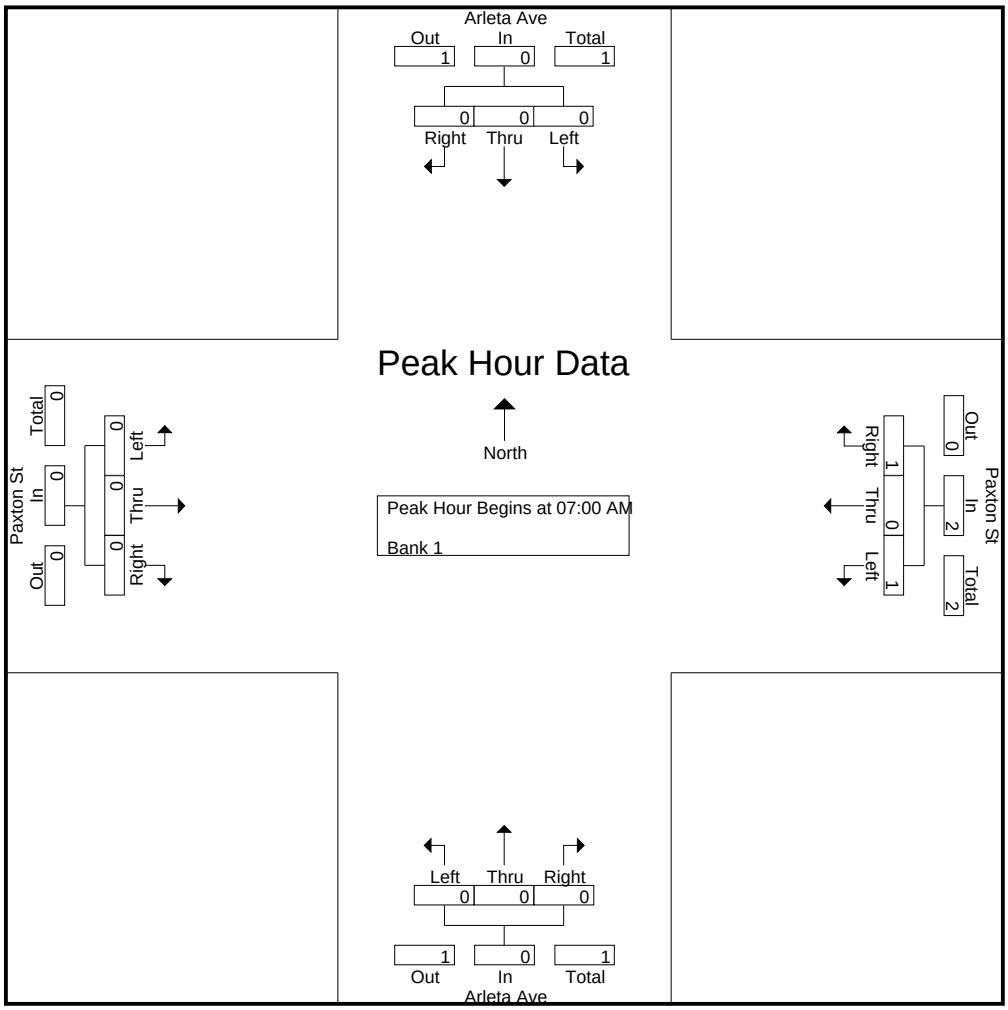

CITY TRAFFIC COUNTERS

626.991.7522

www.ctcounters.com

File Name : arletapaxton_4axle
Site Code : 00000000
Start Date : 1/14/2014
Page No : 3

	Arleta Ave Southbound				Paxton St Westbound				Arleta Ave Northbound				Paxton St Eastbound				
Start Time	Left	Thru	Right	App. Total	Left	Thru	Right	App. Total	Left	Thru	Right	App. Total	Left	Thru	Right	App. Total	Int. Total
Peak Hour Analysis From 10:00 AM to 01:45 PM - Peak 1 of 1																	
Peak Hour for Entire Intersection Begins at 10:00 AM																	
10:00 AM	0	0	0	0	0	0	0	0	0	0	0	0	0	0	0	0	0
10:15 AM	0	0	0	0	0	0	0	0	0	0	0	0	0	0	0	0	0
10:30 AM	0	0	0	0	0	0	0	0	0	0	0	0	0	0	0	0	0
10:45 AM	0	0	0	0	0	0	0	0	0	0	0	0	0	0	0	0	0
Total Volume	0	0	0	0	0	0	0	0	0	0	0	0	0	0	0	0	0
% App. Total	0	0	0		0	0	0		0	0	0		0	0	0		
PHF	.000	.000	.000	.000	.000	.000	.000	.000	.000	.000	.000	.000	.000	.000	.000	.000	.000

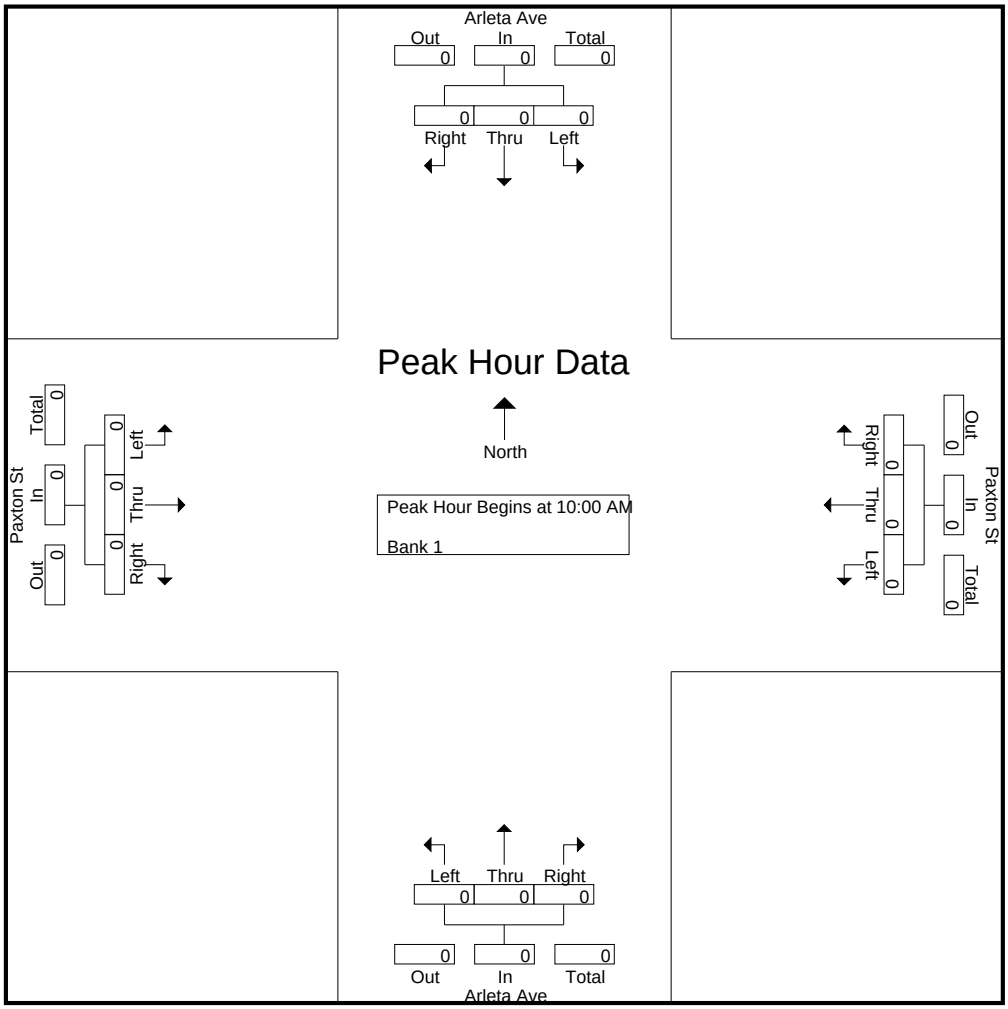

CITY TRAFFIC COUNTERS

626.991.7522

www.ctcounters.com

File Name : arletapaxton_4axle
Site Code : 00000000
Start Date : 1/14/2014
Page No : 4

	Arleta Ave Southbound				Paxton St Westbound				Arleta Ave Northbound				Paxton St Eastbound				
Start Time	Left	Thru	Right	App. Total	Left	Thru	Right	App. Total	Left	Thru	Right	App. Total	Left	Thru	Right	App. Total	Int. Total
Peak Hour Analysis From 02:00 PM to 05:45 PM - Peak 1 of 1																	
Peak Hour for Entire Intersection Begins at 02:00 PM																	
02:00 PM	0	0	0	0	0	0	0	0	0	0	0	0	0	0	0	0	0
02:15 PM	0	0	0	0	0	0	0	0	0	0	0	0	0	0	0	0	0
02:30 PM	0	0	0	0	0	0	0	0	0	0	0	0	0	0	0	0	0
02:45 PM	0	0	0	0	0	0	0	0	0	0	0	0	0	0	0	0	0
Total Volume	0	0	0	0	0	0	0	0	0	0	0	0	0	0	0	0	0
% App. Total	0	0	0		0	0	0		0	0	0		0	0	0		
PHF	.000	.000	.000	.000	.000	.000	.000	.000	.000	.000	.000	.000	.000	.000	.000	.000	.000

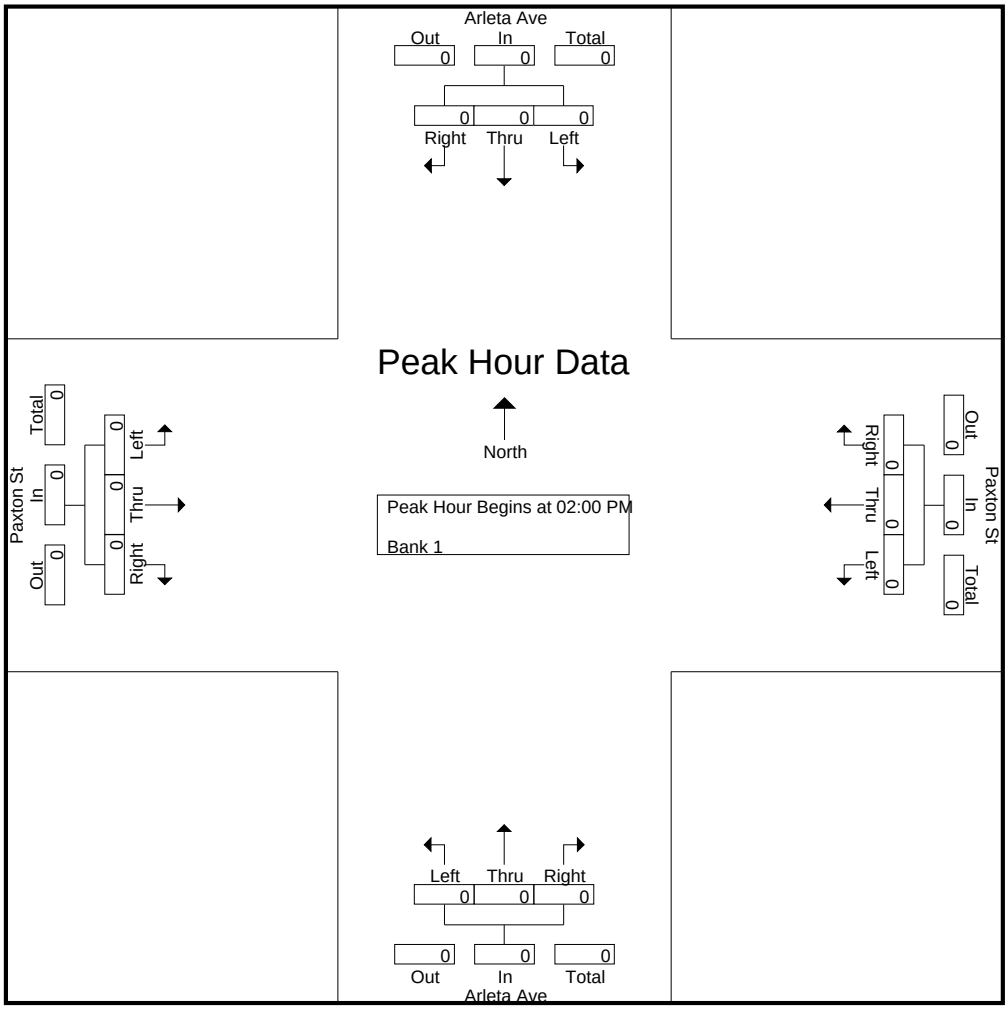

CITY TRAFFIC COUNTERS

626.991.7522

www.ctcounters.com

File Name : ArletaPaxton_5Axle
Site Code : 00000000
Start Date : 1/14/2014
Page No : 1

Groups Printed- Unshifted

	Arleta Ave Southbound			Paxton St Westbound			Arleta Ave Northbound			Paxton St Eastbound			
Start Time	Left	Thru	Right	Left	Thru	Right	Left	Thru	Right	Left	Thru	Right	Int. Total
08:30 AM	0	0	0	2	0	0	0	0	0	0	0	0	2
Total	0	0	0	2	0	0	0	0	0	0	0	0	2
09:15 AM	0	0	0	0	0	0	0	0	1	0	0	0	1
Total	0	0	0	0	0	0	0	0	1	0	0	0	1
04:30 PM	0	0	0	0	0	0	0	0	1	0	0	0	1
Total	0	0	0	0	0	0	0	0	1	0	0	0	1
05:15 PM	0	0	0	0	0	0	0	0	1	0	0	0	1
Total	0	0	0	0	0	0	0	0	1	0	0	0	1
Grand Total	0	0	0	2	0	0	0	0	3	0	0	0	5
Apprch %	0	0	0	100	0	0	0	0	100	0	0	0	
Total %	0	0	0	40	0	0	0	0	60	0	0	0	

CITY TRAFFIC COUNTERS

626.991.7522

www.ctcounters.com

File Name : ArletaPaxton_5Axle
Site Code : 00000000
Start Date : 1/14/2014
Page No : 2

	Arleta Ave Southbound				Paxton St Westbound				Arleta Ave Northbound				Paxton St Eastbound				
Start Time	Left	Thru	Right	App. Total	Left	Thru	Right	App. Total	Left	Thru	Right	App. Total	Left	Thru	Right	App. Total	Int. Total
Peak Hour Analysis From 07:00 AM to 09:45 AM - Peak 1 of 1																	
Peak Hour for Entire Intersection Begins at 08:30 AM																	
08:30 AM	0	0	0	0	**2**	0	0	**2**	0	0	0	0	0	0	0	0	**2**
08:45 AM	0	0	0	0	0	0	0	0	0	0	0	0	0	0	0	0	0
09:00 AM	0	0	0	0	0	0	0	0	0	0	0	0	0	0	0	0	0
09:15 AM	0	0	0	0	0	0	0	0	0	0	**1**	**1**	0	0	0	0	1
Total Volume	0	0	0	0	2	0	0	2	0	0	1	1	0	0	0	0	3
% App. Total	0	0	0		100	0	0		0	0	100		0	0	0		
PHF	.000	.000	.000	.000	.250	.000	.000	.250	.000	.000	.250	.250	.000	.000	.000	.000	.375

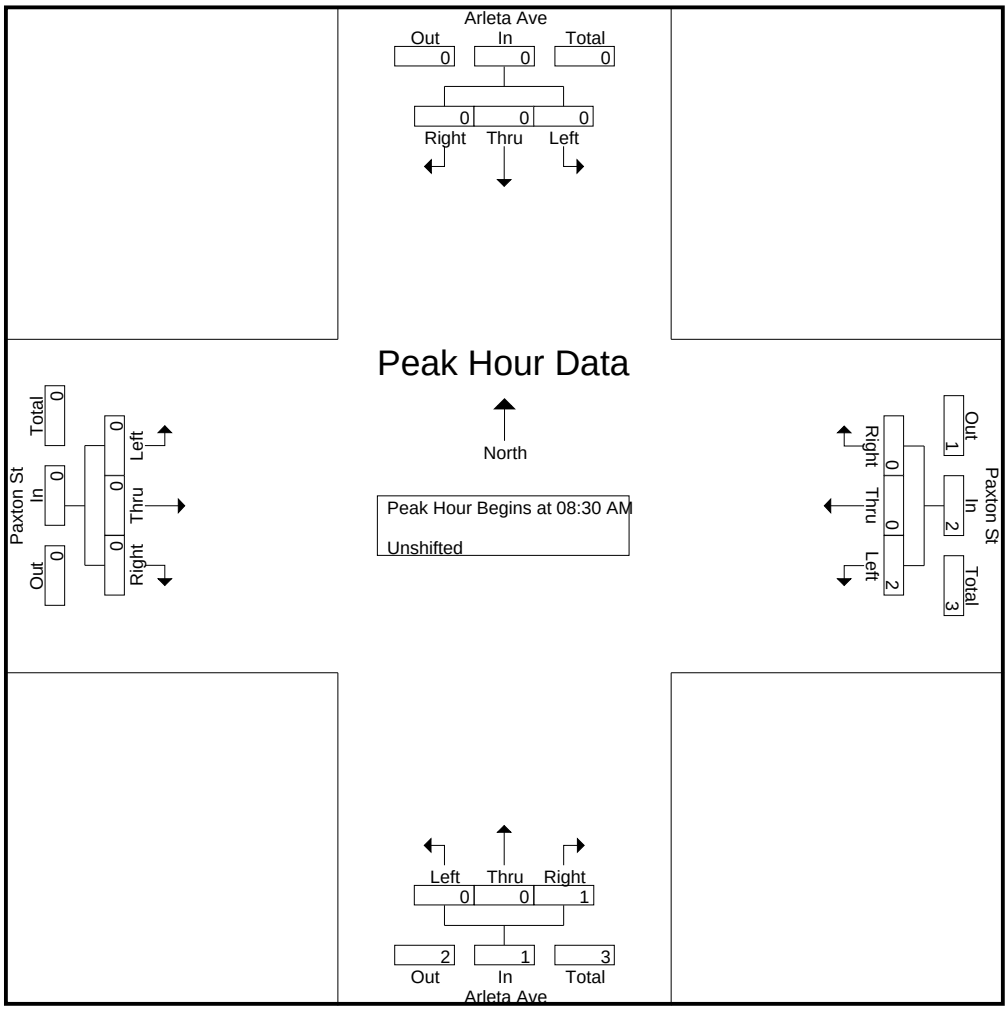

CITY TRAFFIC COUNTERS

626.991.7522

www.ctcounters.com

File Name : ArletaPaxton_5Axle
Site Code : 00000000
Start Date : 1/14/2014
Page No : 3

	Arleta Ave Southbound				Paxton St Westbound				Arleta Ave Northbound				Paxton St Eastbound				
Start Time	Left	Thru	Right	App. Total	Left	Thru	Right	App. Total	Left	Thru	Right	App. Total	Left	Thru	Right	App. Total	Int. Total
Peak Hour Analysis From 10:00 AM to 01:45 PM - Peak 1 of 1																	
Peak Hour for Entire Intersection Begins at 10:00 AM																	
10:00 AM	0	0	0	0	0	0	0	0	0	0	0	0	0	0	0	0	0
10:15 AM	0	0	0	0	0	0	0	0	0	0	0	0	0	0	0	0	0
10:30 AM	0	0	0	0	0	0	0	0	0	0	0	0	0	0	0	0	0
10:45 AM	0	0	0	0	0	0	0	0	0	0	0	0	0	0	0	0	0
Total Volume	0	0	0	0	0	0	0	0	0	0	0	0	0	0	0	0	0
% App. Total	0	0	0		0	0	0		0	0	0		0	0	0		
PHF	.000	.000	.000	.000	.000	.000	.000	.000	.000	.000	.000	.000	.000	.000	.000	.000	.000

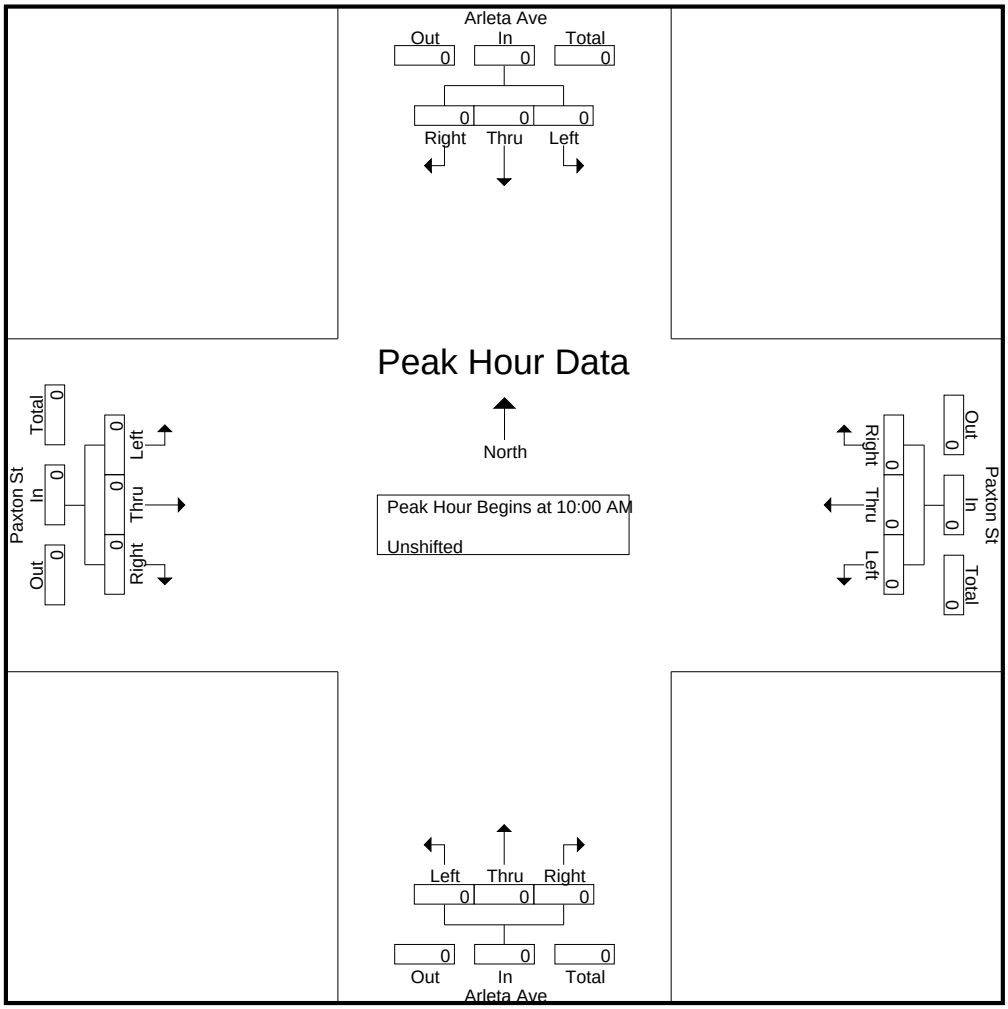

CITY TRAFFIC COUNTERS

626.991.7522

www.ctcounters.com

File Name : ArletaPaxton_5Axle
Site Code : 00000000
Start Date : 1/14/2014
Page No : 4

	Arleta Ave Southbound				Paxton St Westbound				Arleta Ave Northbound				Paxton St Eastbound				
Start Time	Left	Thru	Right	App. Total	Left	Thru	Right	App. Total	Left	Thru	Right	App. Total	Left	Thru	Right	App. Total	Int. Total
Peak Hour Analysis From 02:00 PM to 06:15 PM - Peak 1 of 1																	
Peak Hour for Entire Intersection Begins at 04:30 PM																	
04:30 PM	0	0	0	0	0	0	0	0	0	0	**1**	**1**	0	0	0	0	**1**
04:45 PM	0	0	0	0	0	0	0	0	0	0	0	0	0	0	0	0	0
05:00 PM	0	0	0	0	0	0	0	0	0	0	0	0	0	0	0	0	0
05:15 PM	0	0	0	0	0	0	0	0	0	0	1	1	0	0	0	0	1
Total Volume	0	0	0	0	0	0	0	0	0	0	2	2	0	0	0	0	2
% App. Total	0	0	0		0	0	0		0	0	100		0	0	0		
PHF	.000	.000	.000	.000	.000	.000	.000	.000	.000	.000	.500	.500	.000	.000	.000	.000	.500

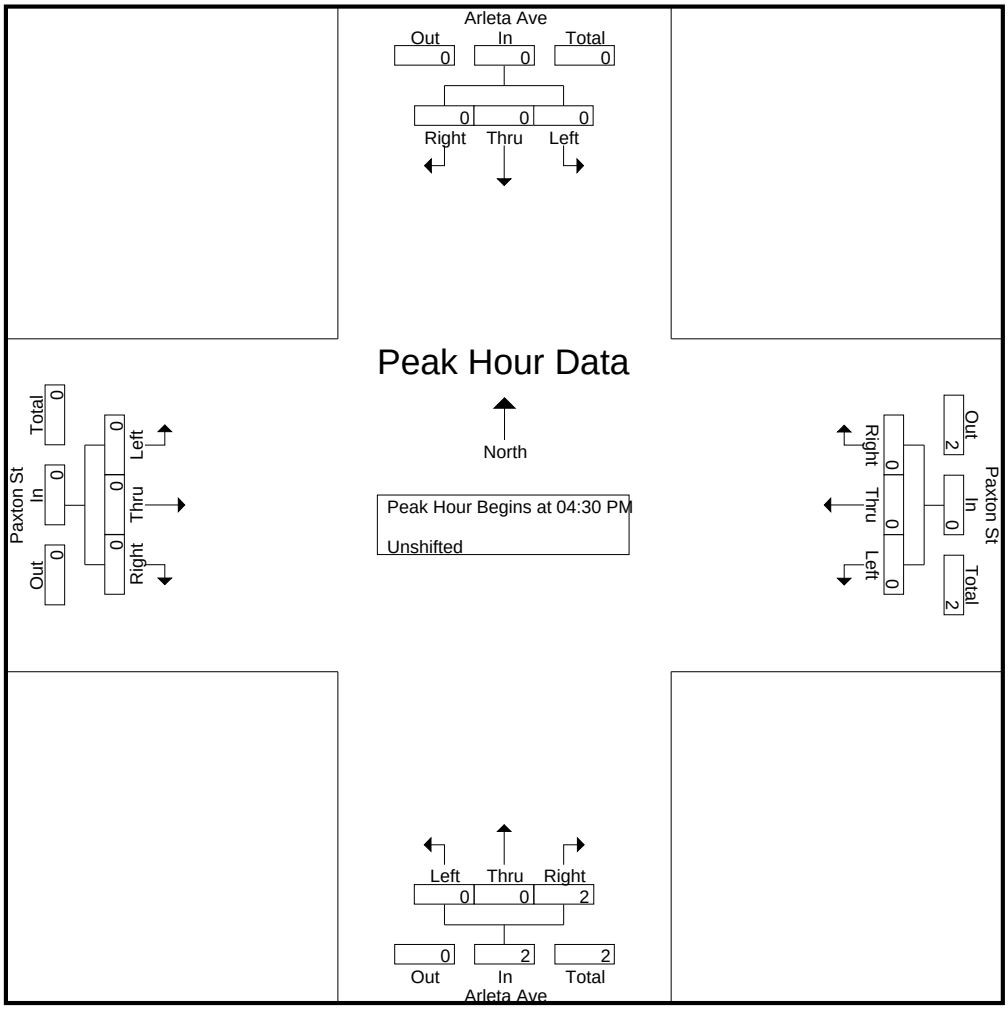

CITY TRAFFIC COUNTERS

626.991.7522

www.ctcounters.com

File Name : 5SBPaxton
Site Code : 00000000
Start Date : 1/14/2014
Page No : 1

Groups Printed- Unshifted

	I-5 SB Ramps Southbound			Paxton St Westbound			Sharp Ave Northbound			Paxton St Eastbound			
Start Time	Left	Thru	Right	Left	Thru	Right	Left	Thru	Right	Left	Thru	Right	Int. Total
07:00 AM	16	4	80	3	92	51	0	0	16	32	94	0	388
07:15 AM	18	3	79	9	101	59	0	0	22	41	125	0	457
07:30 AM	22	3	112	14	84	81	0	0	27	54	142	1	540
07:45 AM	24	2	85	7	83	61	0	2	31	43	106	0	444
Total	80	12	356	33	360	252	0	2	96	170	467	1	1829
08:00 AM	27	3	83	4	65	50	0	0	16	41	111	0	400
08:15 AM	28	4	63	0	64	45	0	0	8	20	87	0	319
08:30 AM	26	3	39	7	73	30	0	1	12	18	61	0	270
08:45 AM	49	5	52	3	70	28	0	1	13	17	49	0	287
Total	130	15	237	14	272	153	0	2	49	96	308	0	1276
09:00 AM	18	0	47	8	47	40	0	0	8	20	94	0	282
09:15 AM	17	3	8	6	61	16	0	3	9	14	58	0	195
09:30 AM	10	2	10	5	56	13	0	1	12	12	51	0	172
09:45 AM	20	1	6	12	49	14	1	0	10	14	52	1	180
Total	65	6	71	31	213	83	1	4	39	60	255	1	829
12:00 PM	17	5	11	5	54	11	0	1	15	7	63	2	191
12:15 PM	18	1	7	5	60	8	0	1	13	12	55	0	180
12:30 PM	12	2	12	6	57	12	1	1	8	7	63	1	182
12:45 PM	17	4	8	4	60	8	1	1	4	13	61	0	181
Total	64	12	38	20	231	39	2	4	40	39	242	3	734
01:00 PM	13	4	5	7	74	14	0	0	5	8	68	0	198
01:15 PM	10	1	13	9	87	10	0	0	9	12	69	1	221
01:30 PM	14	2	9	8	82	14	0	1	10	10	82	0	232
01:45 PM	18	0	3	10	82	12	0	0	10	21	104	1	261
Total	55	7	30	34	325	50	0	1	34	51	323	2	912
03:00 PM	15	3	16	6	94	8	2	0	10	9	103	1	267
03:15 PM	25	5	24	8	86	11	0	0	14	12	85	0	270
03:30 PM	34	4	25	11	90	15	0	1	15	20	120	0	335
03:45 PM	31	5	27	17	80	13	0	0	18	15	124	2	332
Total	105	17	92	42	350	47	2	1	57	56	432	3	1204
04:00 PM	17	2	19	8	102	14	0	0	10	13	118	0	303
04:15 PM	21	3	17	11	86	10	1	0	6	8	126	2	291
04:30 PM	38	5	26	12	100	16	0	0	11	17	159	2	386
04:45 PM	31	1	34	12	93	25	1	0	13	9	148	1	368
Total	107	11	96	43	381	65	2	0	40	47	551	5	1348
05:00 PM	28	5	29	24	94	20	0	1	16	13	153	2	385
05:15 PM	29	1	21	21	100	11	0	1	17	13	154	3	371
05:30 PM	17	4	30	24	95	16	0	0	11	8	152	1	358
05:45 PM	20	5	27	11	109	11	0	3	14	15	159	1	375
Total	94	15	107	80	398	58	0	5	58	49	618	7	1489
Grand Total	700	95	1027	297	2530	747	7	19	413	568	3196	22	9621
Apprch %	38.4	5.2	56.4	8.3	70.8	20.9	1.6	4.3	94.1	15	84.4	0.6	
Total %	7.3	1	10.7	3.1	26.3	7.8	0.1	0.2	4.3	5.9	33.2	0.2	

CITY TRAFFIC COUNTERS

626.991.7522

www.ctcounters.com

File Name : 5SBPaxton
Site Code : 00000000
Start Date : 1/14/2014
Page No : 2

	I-5 SB Ramps Southbound				Paxton St Westbound				Sharp Ave Northbound				Paxton St Eastbound				
Start Time	Left	Thru	Right	App. Total	Left	Thru	Right	App. Total	Left	Thru	Right	App. Total	Left	Thru	Right	App. Total	Int. Total
Peak Hour Analysis From 07:00 AM to 09:45 AM - Peak 1 of 1																	
Peak Hour for Entire Intersection Begins at 07:15 AM																	
07:15 AM	18	**3**	79	100	9	**101**	59	169	0	0	22	22	41	125	0	166	457
07:30 AM	22	3	**112**	**137**	**14**	84	**81**	**179**	0	0	27	27	**54**	**142**	**1**	**197**	**540**
07:45 AM	24	2	85	111	7	83	61	151	0	**2**	**31**	**33**	43	106	0	149	444
08:00 AM	**27**	3	83	113	4	65	50	119	0	0	16	16	41	111	0	152	400
Total Volume	91	11	359	461	34	333	251	618	0	2	96	98	179	484	1	664	1841
% App. Total	19.7	2.4	77.9		5.5	53.9	40.6		0	2	98		27	72.9	0.2		
PHF	.843	.917	.801	.841	.607	.824	.775	.863	.000	.250	.774	.742	.829	.852	.250	.843	.852

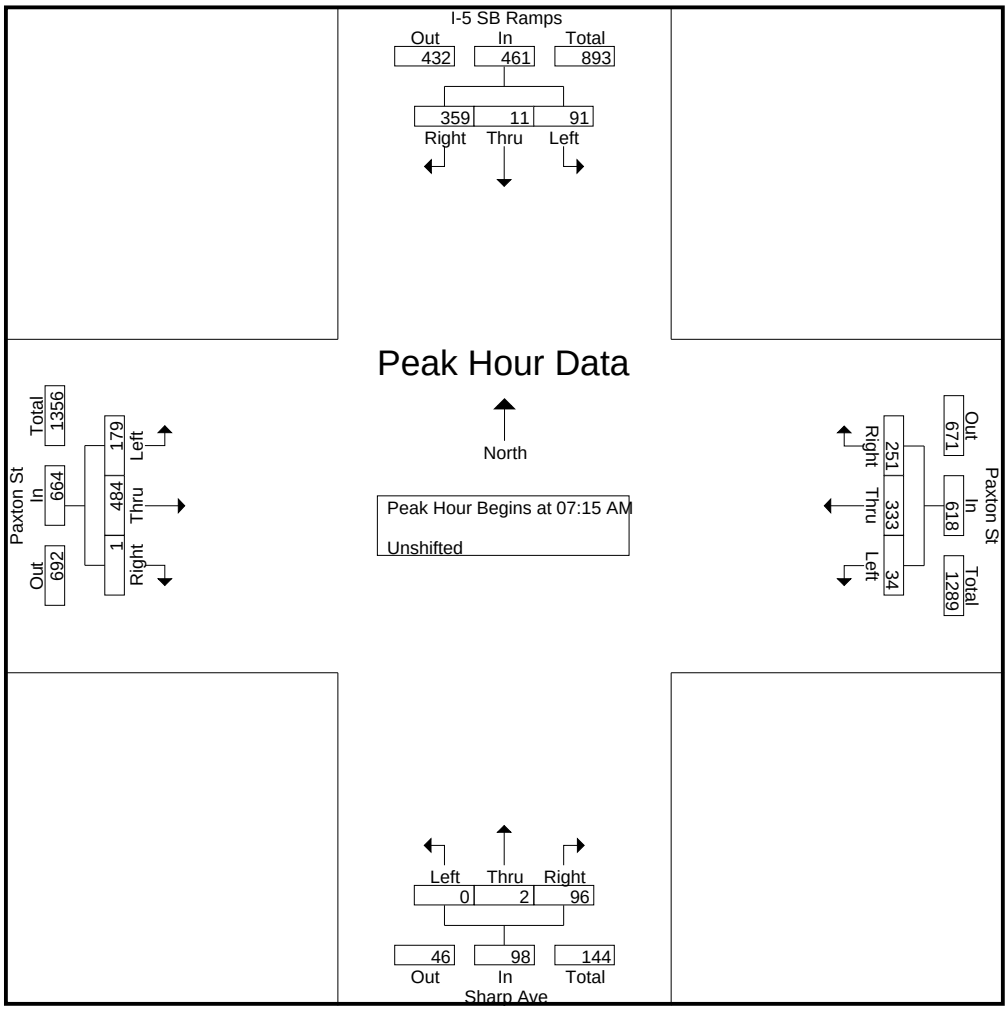

CITY TRAFFIC COUNTERS

626.991.7522

www.ctcounters.com

File Name : 5SBPaxton
Site Code : 00000000
Start Date : 1/14/2014
Page No : 3

	I-5 SB Ramps Southbound				Paxton St Westbound				Sharp Ave Northbound				Paxton St Eastbound				
Start Time	Left	Thru	Right	App. Total	Left	Thru	Right	App. Total	Left	Thru	Right	App. Total	Left	Thru	Right	App. Total	Int. Total
Peak Hour Analysis From 10:00 AM to 01:45 PM - Peak 1 of 1																	
Peak Hour for Entire Intersection Begins at 01:00 PM																	
01:00 PM	13	**4**	5	22	7	74	**14**	95	0	0	5	5	8	68	0	76	198
01:15 PM	10	1	**13**	24	9	**87**	10	**106**	0	0	9	9	12	69	**1**	82	221
01:30 PM	14	2	9	**25**	8	82	14	104	0	**1**	**10**	**11**	10	82	0	92	232
01:45 PM	**18**	0	3	21	**10**	82	12	104	0	0	10	10	**21**	**104**	1	**126**	**261**
Total Volume	55	7	30	92	34	325	50	409	0	1	34	35	51	323	2	376	912
% App. Total	59.8	7.6	32.6		8.3	79.5	12.2		0	2.9	97.1		13.6	85.9	0.5		
PHF	.764	.438	.577	.920	.850	.934	.893	.965	.000	.250	.850	.795	.607	.776	.500	.746	.874

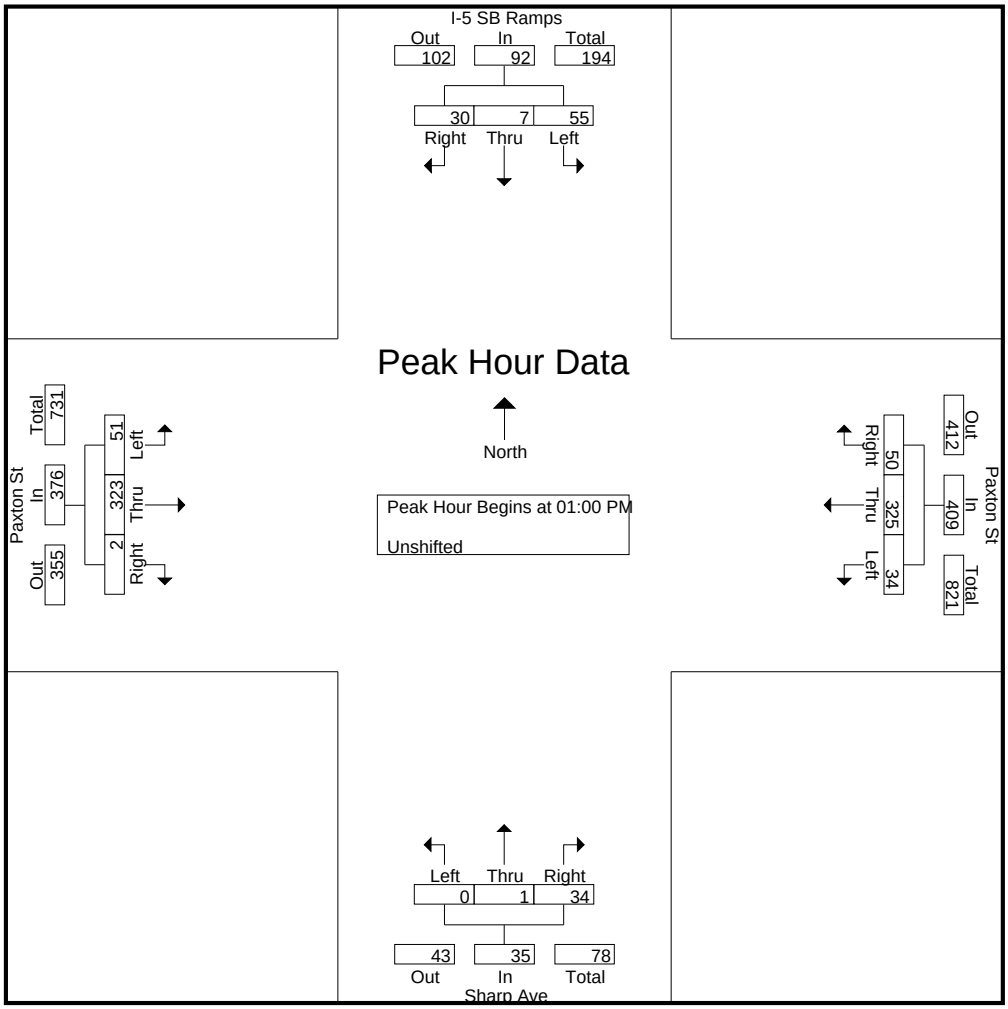

CITY TRAFFIC COUNTERS

626.991.7522

www.ctcounters.com

File Name : 5SBPaxton
Site Code : 00000000
Start Date : 1/14/2014
Page No : 4

	I-5 SB Ramps Southbound				Paxton St Westbound				Sharp Ave Northbound				Paxton St Eastbound				
Start Time	Left	Thru	Right	App. Total	Left	Thru	Right	App. Total	Left	Thru	Right	App. Total	Left	Thru	Right	App. Total	Int. Total
Peak Hour Analysis From 02:00 PM to 05:45 PM - Peak 1 of 1																	
Peak Hour for Entire Intersection Begins at 04:30 PM																	
04:30 PM	**38**	**5**	26	**69**	12	**100**	16	128	0	0	11	11	**17**	**159**	2	**178**	**386**
04:45 PM	31	1	**34**	66	12	93	**25**	130	**1**	0	13	14	9	148	1	158	368
05:00 PM	28	5	29	62	**24**	94	20	**138**	0	**1**	16	17	13	153	2	168	385
05:15 PM	29	1	21	51	21	100	11	132	0	1	**17**	**18**	13	154	**3**	170	371
Total Volume	126	12	110	248	69	387	72	528	1	2	57	60	52	614	8	674	1510
% App. Total	50.8	4.8	44.4		13.1	73.3	13.6		1.7	3.3	95		7.7	91.1	1.2		
PHF	.829	.600	.809	.899	.719	.968	.720	.957	.250	.500	.838	.833	.765	.965	.667	.947	.978

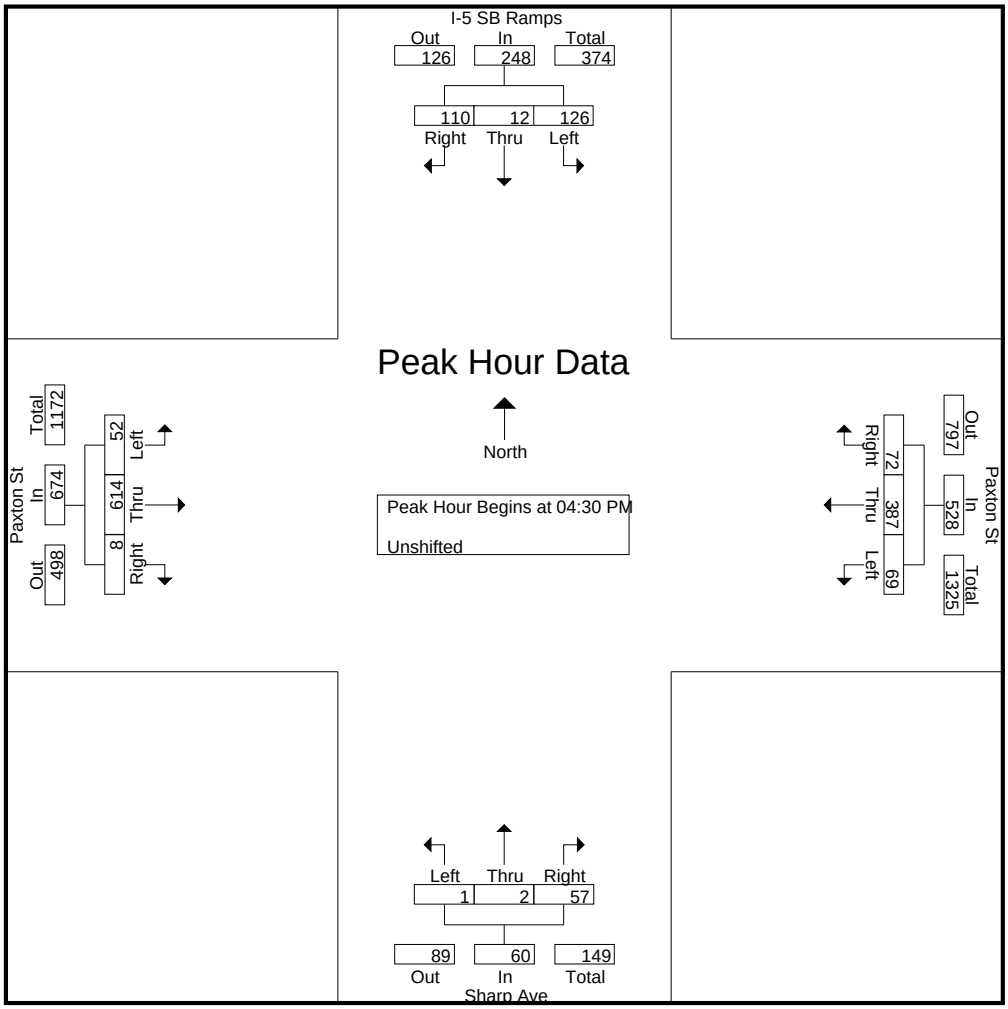

CITY TRAFFIC COUNTERS

626.991.7522

www.ctcounters.com

File Name : 5SBPaxton_MC
Site Code : 00000000
Start Date : 1/14/2014
Page No : 1

Groups Printed- Bank 1

	I-5 SB Ramp Southbound			Paxton St Westbound			Sharp Ave Northbound			Paxton St Eastbound			
Start Time	Left	Thru	Right	Left	Thru	Right	Left	Thru	Right	Left	Thru	Right	Int. Total
07:00 AM	0	0	1	0	1	0	0	0	0	0	0	0	2
07:30 AM	0	0	1	0	0	0	0	0	0	0	0	0	1
07:45 AM	0	0	0	0	0	0	0	0	0	1	0	0	1
Total	0	0	2	0	1	0	0	0	0	1	0	0	4
08:15 AM	0	0	0	0	0	0	0	0	0	1	0	0	1
Total	0	0	0	0	0	0	0	0	0	1	0	0	1
09:00 AM	0	0	0	0	0	1	0	0	0	0	0	0	1
09:30 AM	1	0	0	0	0	1	0	0	0	0	0	0	2
Total	1	0	0	0	0	2	0	0	0	0	0	0	3
12:15 PM	0	0	0	0	1	0	0	0	0	0	0	0	1
12:30 PM	0	0	1	0	0	0	0	0	1	0	0	0	2
Total	0	0	1	0	1	0	0	0	1	0	0	0	3
03:30 PM	0	0	0	1	0	0	0	0	0	0	0	0	1
03:45 PM	0	0	1	0	0	0	0	0	0	0	0	0	1
Total	0	0	1	1	0	0	0	0	0	0	0	0	2
04:00 PM	0	0	0	0	0	0	0	0	0	0	1	0	1
04:15 PM	0	0	0	0	0	0	0	0	0	0	1	0	1
04:45 PM	0	0	0	0	0	0	0	0	0	1	1	0	2
Total	0	0	0	0	0	0	0	0	0	1	3	0	4
05:15 PM	0	0	0	0	1	0	0	0	0	0	0	0	1
05:30 PM	0	0	0	0	1	0	0	0	0	0	0	0	1
05:45 PM	0	0	0	0	1	0	0	0	0	0	0	0	1
Total	0	0	0	0	3	0	0	0	0	0	0	0	3
Grand Total	1	0	4	1	5	2	0	0	1	3	3	0	20
Apprch %	20	0	80	12.5	62.5	25	0	0	100	50	50	0	
Total %	5	0	20	5	25	10	0	0	5	15	15	0	

CITY TRAFFIC COUNTERS

626.991.7522

www.ctcounters.com

File Name : 5SBPaxton_MC
Site Code : 00000000
Start Date : 1/14/2014
Page No : 2

	I-5 SB Ramp Southbound				Paxton St Westbound				Sharp Ave Northbound				Paxton St Eastbound				
Start Time	Left	Thru	Right	App. Total	Left	Thru	Right	App. Total	Left	Thru	Right	App. Total	Left	Thru	Right	App. Total	Int. Total
Peak Hour Analysis From 07:00 AM to 09:45 AM - Peak 1 of 1																	
Peak Hour for Entire Intersection Begins at 07:00 AM																	
07:00 AM	0	0	**1**	**1**	0	**1**	0	**1**	0	0	0	0	0	0	0	0	**2**
07:15 AM	0	0	0	0	0	0	0	0	0	0	0	0	0	0	0	0	0
07:30 AM	0	0	1	1	0	0	0	0	0	0	0	0	0	0	0	0	1
07:45 AM	0	0	0	0	0	0	0	0	0	0	0	0	**1**	0	0	**1**	1
Total Volume	0	0	2	2	0	1	0	1	0	0	0	0	1	0	0	1	4
% App. Total	0	0	100		0	100	0		0	0	0		100	0	0		
PHF	.000	.000	.500	.500	.000	.250	.000	.250	.000	.000	.000	.000	.250	.000	.000	.250	.500

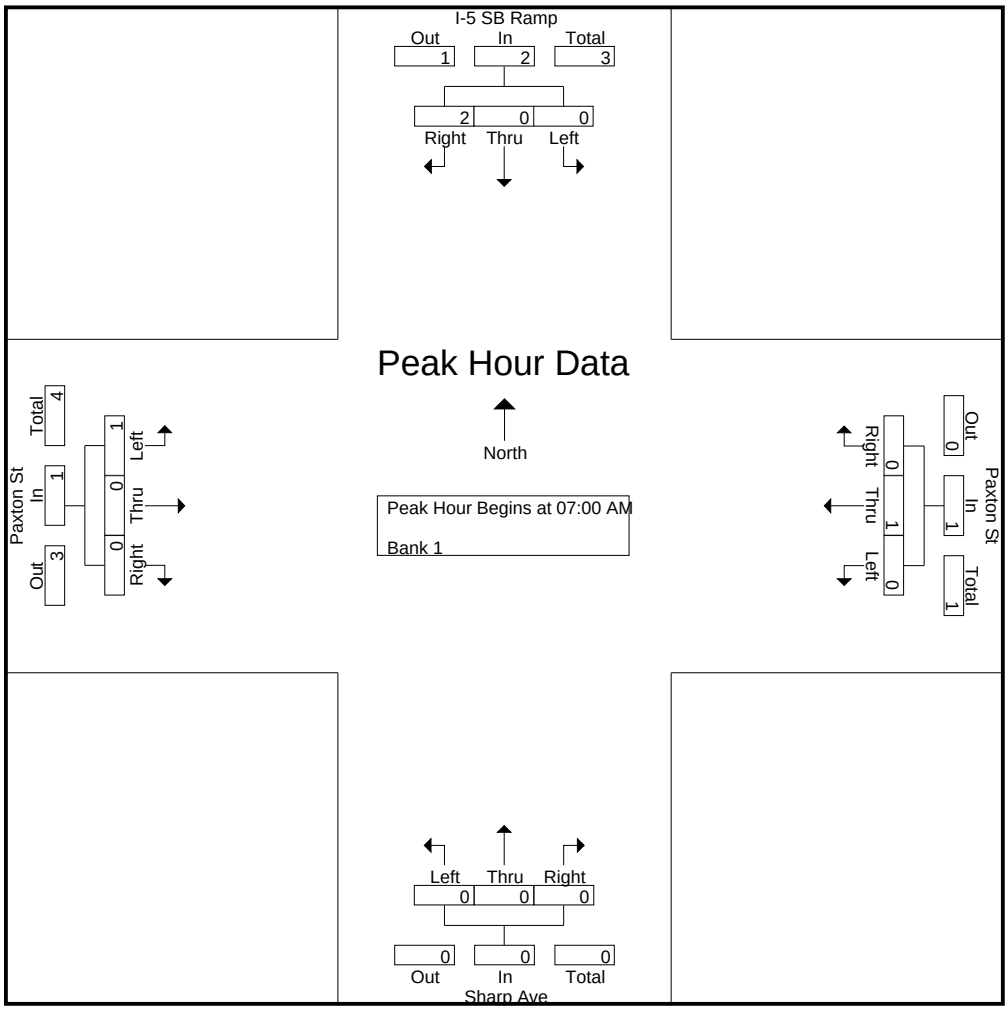

CITY TRAFFIC COUNTERS

626.991.7522

www.ctcounters.com

File Name : 5SBPaxton_MC
Site Code : 00000000
Start Date : 1/14/2014
Page No : 3

	I-5 SB Ramp Southbound				Paxton St Westbound				Sharp Ave Northbound				Paxton St Eastbound				
Start Time	Left	Thru	Right	App. Total	Left	Thru	Right	App. Total	Left	Thru	Right	App. Total	Left	Thru	Right	App. Total	Int. Total
Peak Hour Analysis From 10:00 AM to 01:45 PM - Peak 1 of 1																	
Peak Hour for Entire Intersection Begins at 11:45 AM																	
11:45 AM	0	0	0	0	0	0	0	0	0	0	0	0	0	0	0	0	0
12:00 PM	0	0	0	0	0	0	0	0	0	0	0	0	0	0	0	0	0
12:15 PM	0	0	0	0	0	**1**	0	**1**	0	0	0	0	0	0	0	0	1
12:30 PM	0	0	**1**	**1**	0	0	0	0	0	0	**1**	**1**	0	0	0	0	**2**
Total Volume	0	0	1	1	0	1	0	1	0	0	1	1	0	0	0	0	3
% App. Total	0	0	100		0	100	0		0	0	100		0	0	0		
PHF	.000	.000	.250	.250	.000	.250	.000	.250	.000	.000	.250	.250	.000	.000	.000	.000	.375

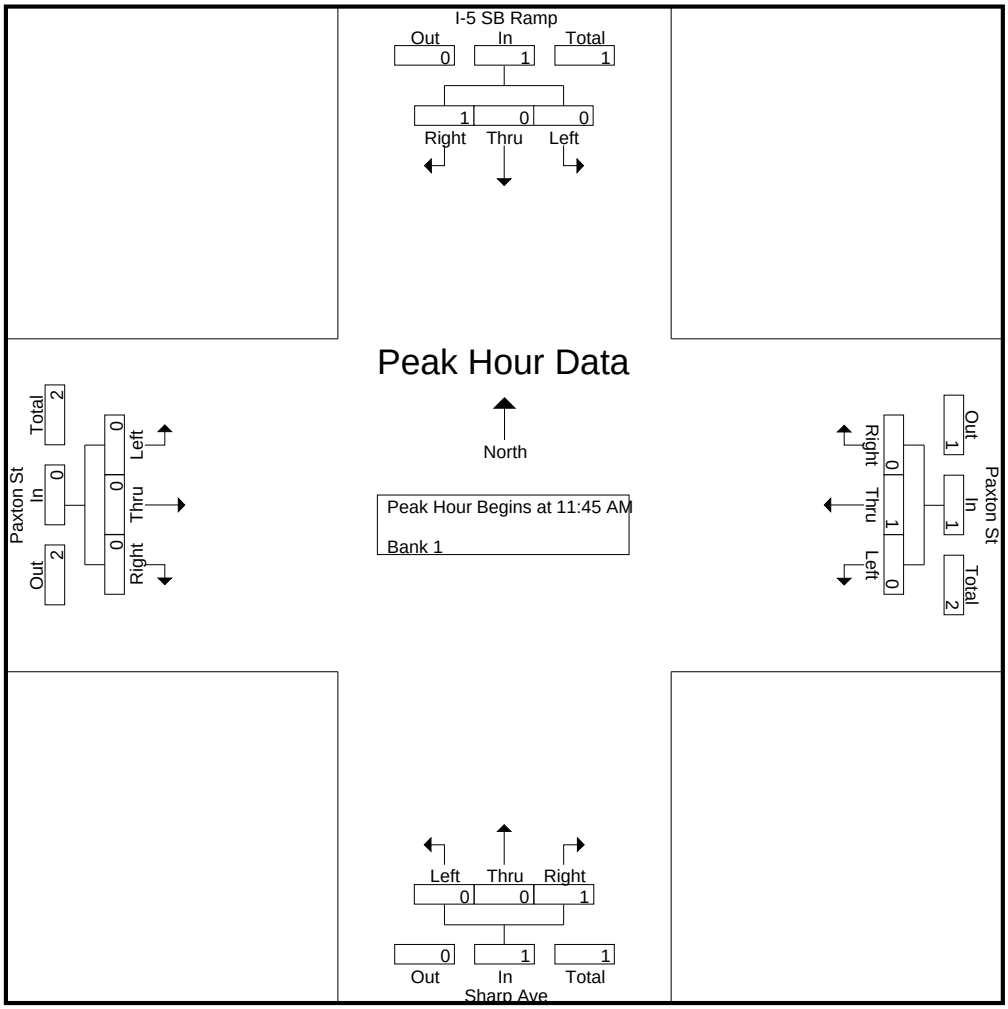

CITY TRAFFIC COUNTERS

626.991.7522

www.ctcounters.com

File Name : 5SBPaxton_MC
Site Code : 00000000
Start Date : 1/14/2014
Page No : 4

	I-5 SB Ramp Southbound				Paxton St Westbound				Sharp Ave Northbound				Paxton St Eastbound				
Start Time	Left	Thru	Right	App. Total	Left	Thru	Right	App. Total	Left	Thru	Right	App. Total	Left	Thru	Right	App. Total	Int. Total
Peak Hour Analysis From 02:00 PM to 05:45 PM - Peak 1 of 1																	
Peak Hour for Entire Intersection Begins at 03:30 PM																	
03:30 PM	0	0	0	0	**1**	0	0	**1**	0	0	0	0	0	0	0	0	**1**
03:45 PM	0	0	**1**	**1**	0	0	0	0	0	0	0	0	0	0	0	0	1
04:00 PM	0	0	0	0	0	0	0	0	0	0	0	0	0	**1**	0	**1**	1
04:15 PM	0	0	0	0	0	0	0	0	0	0	0	0	0	1	0	1	1
Total Volume	0	0	1	1	1	0	0	1	0	0	0	0	0	2	0	2	4
% App. Total	0	0	100		100	0	0		0	0	0		0	100	0		
PHF	.000	.000	.250	.250	.250	.000	.000	.250	.000	.000	.000	.000	.000	.500	.000	.500	1.00

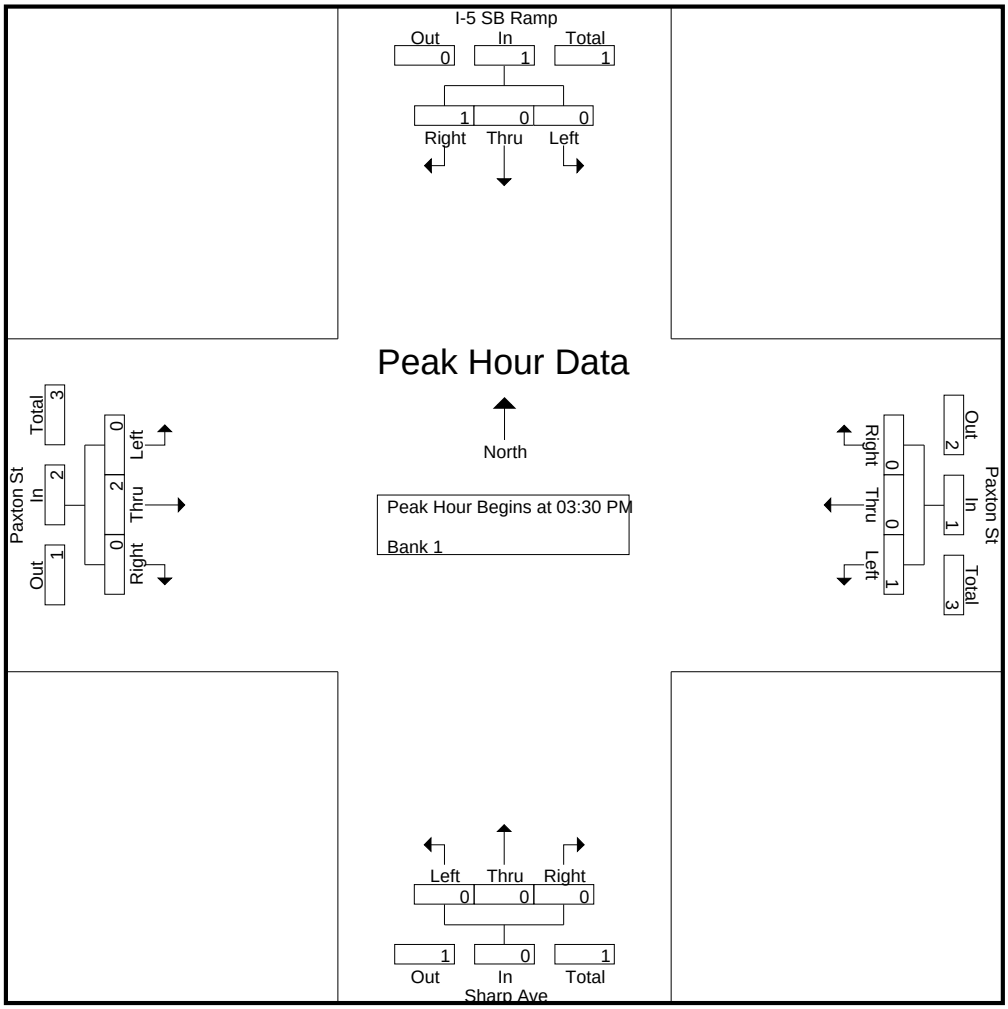

CITY TRAFFIC COUNTERS

626.991.7522

www.ctcounters.com

File Name : 5SBPaxton_Bus
Site Code : 00000000
Start Date : 1/14/2014
Page No : 1

Groups Printed- Bank 2

	I-5 SB Ramps Southbound			Paxton St Westbound			Sharp Ave Northbound			Paxton St Eastbound			
Start Time	Left	Thru	Right	Left	Thru	Right	Left	Thru	Right	Left	Thru	Right	Int. Total
07:00 AM	0	0	1	1	1	0	0	0	0	0	1	0	4
07:15 AM	0	0	0	0	0	0	0	0	0	0	1	0	1
07:30 AM	0	0	0	0	2	0	0	0	0	0	0	0	2
Total	0	0	1	1	3	0	0	0	0	0	2	0	7
08:00 AM	0	0	0	0	2	0	0	0	0	0	0	0	2
08:30 AM	0	0	0	0	2	0	0	0	0	0	1	0	3
08:45 AM	0	0	0	0	0	0	0	0	0	0	3	0	3
Total	0	0	0	0	4	0	0	0	0	0	4	0	8
09:00 AM	0	0	0	0	0	0	0	0	0	0	4	0	4
09:15 AM	0	0	0	0	0	0	0	0	0	0	5	0	5
09:30 AM	0	0	0	0	0	0	0	0	0	1	0	0	1
09:45 AM	0	0	0	0	0	0	0	0	0	0	1	0	1
Total	0	0	0	0	0	0	0	0	0	1	10	0	11
12:15 PM	0	0	0	0	2	0	0	0	0	0	1	0	3
12:30 PM	0	0	0	0	1	0	0	0	0	0	0	0	1
12:45 PM	0	0	0	0	0	0	0	0	0	0	1	0	1
Total	0	0	0	0	3	0	0	0	0	0	2	0	5
01:00 PM	0	0	0	0	1	0	0	0	0	0	0	0	1
01:15 PM	0	0	0	0	1	0	0	0	0	0	0	0	1
01:30 PM	0	0	0	0	0	2	0	0	0	0	0	0	2
01:45 PM	0	0	0	0	1	0	0	0	0	0	2	0	3
Total	0	0	0	0	3	2	0	0	0	0	2	0	7
03:00 PM	0	0	0	0	1	1	0	0	0	0	3	0	5
03:15 PM	0	0	0	0	1	0	0	0	0	0	4	0	5
03:30 PM	0	0	0	0	0	0	0	0	0	0	4	0	4
03:45 PM	0	0	0	0	0	0	0	0	0	0	2	0	2
Total	0	0	0	0	2	1	0	0	0	0	13	0	16
04:00 PM	0	0	0	0	0	0	0	0	0	0	2	0	2
04:15 PM	1	0	0	0	0	0	0	0	0	0	2	0	3
04:30 PM	0	0	0	0	0	0	0	0	0	0	2	0	2
Total	1	0	0	0	0	0	0	0	0	0	6	0	7
05:00 PM	0	0	0	0	0	0	0	0	0	0	1	0	1
05:15 PM	0	0	0	0	1	0	0	0	0	0	3	0	4
05:30 PM	0	0	0	0	0	0	0	0	0	0	1	0	1
Total	0	0	0	0	1	0	0	0	0	0	5	0	6
Grand Total	1	0	1	1	16	3	0	0	0	1	44	0	67
Apprch %	50	0	50	5	80	15	0	0	0	2.2	97.8	0	
Total %	1.5	0	1.5	1.5	23.9	4.5	0	0	0	1.5	65.7	0	

CITY TRAFFIC COUNTERS

626.991.7522

www.ctcounters.com

File Name : 5SBPaxton_Bus
Site Code : 00000000
Start Date : 1/14/2014
Page No : 2

	I-5 SB Ramps Southbound				Paxton St Westbound				Sharp Ave Northbound				Paxton St Eastbound				
Start Time	Left	Thru	Right	App. Total	Left	Thru	Right	App. Total	Left	Thru	Right	App. Total	Left	Thru	Right	App. Total	Int. Total
Peak Hour Analysis From 07:00 AM to 09:45 AM - Peak 1 of 1																	
Peak Hour for Entire Intersection Begins at 08:30 AM																	
08:30 AM	0	0	0	0	0	**2**	0	**2**	0	0	0	0	0	1	0	1	3
08:45 AM	0	0	0	0	0	0	0	0	0	0	0	0	0	3	0	3	3
09:00 AM	0	0	0	0	0	0	0	0	0	0	0	0	0	4	0	4	4
09:15 AM	0	0	0	0	0	0	0	0	0	0	0	0	0	**5**	0	**5**	**5**
Total Volume	0	0	0	0	0	2	0	2	0	0	0	0	0	13	0	13	15
% App. Total	0	0	0		0	100	0		0	0	0		0	100	0		
PHF	.000	.000	.000	.000	.000	.250	.000	.250	.000	.000	.000	.000	.000	.650	.000	.650	.750

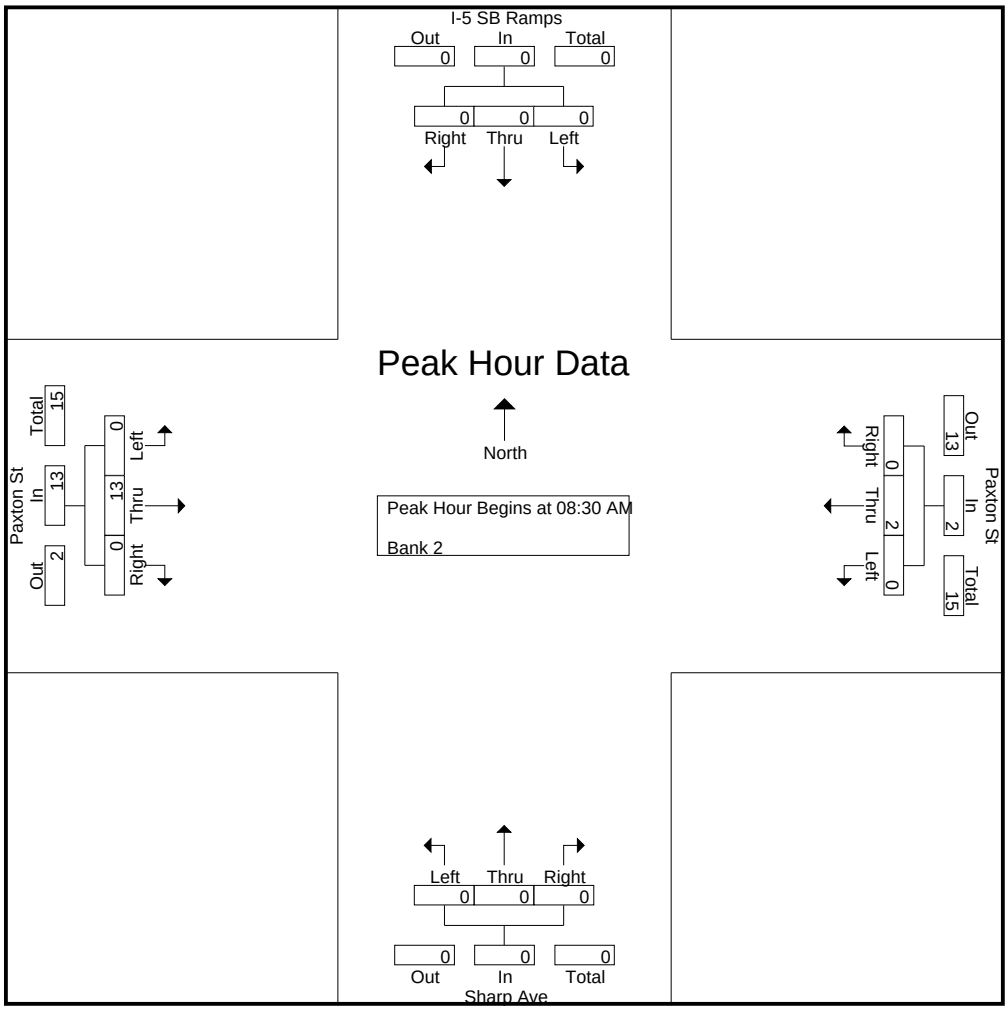

CITY TRAFFIC COUNTERS

626.991.7522

www.ctcounters.com

File Name : 5SBPaxton_Bus
Site Code : 00000000
Start Date : 1/14/2014
Page No : 3

	I-5 SB Ramps Southbound				Paxton St Westbound				Sharp Ave Northbound				Paxton St Eastbound				
Start Time	Left	Thru	Right	App. Total	Left	Thru	Right	App. Total	Left	Thru	Right	App. Total	Left	Thru	Right	App. Total	Int. Total
Peak Hour Analysis From 10:00 AM to 01:45 PM - Peak 1 of 1																	
Peak Hour for Entire Intersection Begins at 01:00 PM																	
01:00 PM	0	0	0	0	0	**1**	0	1	0	0	0	0	0	0	0	0	1
01:15 PM	0	0	0	0	0	1	0	1	0	0	0	0	0	0	0	0	1
01:30 PM	0	0	0	0	0	0	**2**	**2**	0	0	0	0	0	0	0	0	2
01:45 PM	0	0	0	0	0	1	0	1	0	0	0	0	0	**2**	0	**2**	**3**
Total Volume	0	0	0	0	0	3	2	5	0	0	0	0	0	2	0	2	7
% App. Total	0	0	0		0	60	40		0	0	0		0	100	0		
PHF	.000	.000	.000	.000	.000	.750	.250	.625	.000	.000	.000	.000	.000	.250	.000	.250	.583

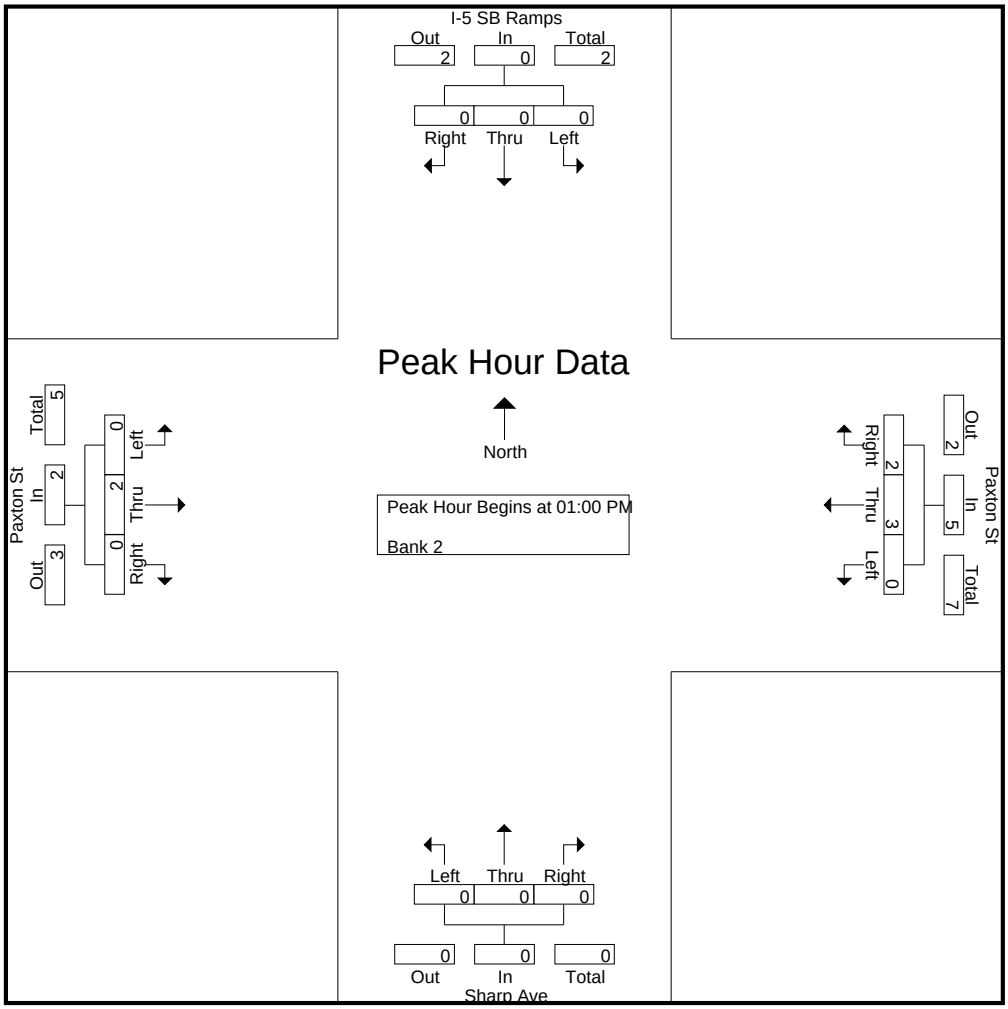

CITY TRAFFIC COUNTERS

626.991.7522

www.ctcounters.com

File Name : 5SBPaxton_Bus
Site Code : 00000000
Start Date : 1/14/2014
Page No : 4

	I-5 SB Ramps Southbound				Paxton St Westbound				Sharp Ave Northbound				Paxton St Eastbound				
Start Time	Left	Thru	Right	App. Total	Left	Thru	Right	App. Total	Left	Thru	Right	App. Total	Left	Thru	Right	App. Total	Int. Total
Peak Hour Analysis From 02:00 PM to 05:45 PM - Peak 1 of 1																	
Peak Hour for Entire Intersection Begins at 03:00 PM																	
03:00 PM	0	0	0	0	0	**1**	**1**	**2**	0	0	0	0	0	3	0	3	**5**
03:15 PM	0	0	0	0	0	1	0	1	0	0	0	0	0	**4**	0	**4**	5
03:30 PM	0	0	0	0	0	0	0	0	0	0	0	0	0	4	0	4	4
03:45 PM	0	0	0	0	0	0	0	0	0	0	0	0	0	2	0	2	2
Total Volume	0	0	0	0	0	2	1	3	0	0	0	0	0	13	0	13	16
% App. Total	0	0	0		0	66.7	33.3		0	0	0		0	100	0		
PHF	.000	.000	.000	.000	.000	.500	.250	.375	.000	.000	.000	.000	.000	.813	.000	.813	.800

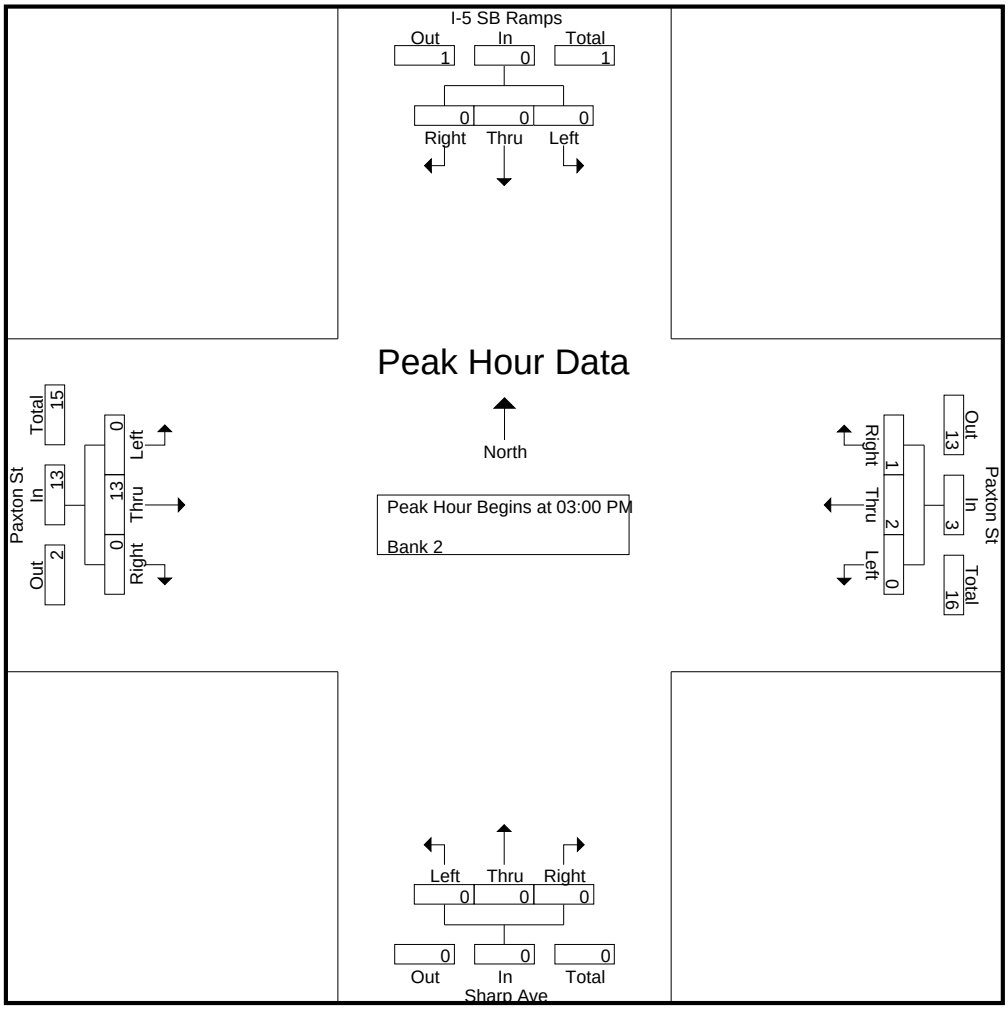

CITY TRAFFIC COUNTERS

626.991.7522

www.ctcounters.com

File Name : 5SBPaxton_2Axle
Site Code : 00000000
Start Date : 1/14/2014
Page No : 1

Groups Printed- Unshifted

	I-5 SB Ramp Southbound			Paxton St Westbound			Sharp Ave Northbound			Paxton St Eastbound			
Start Time	Left	Thru	Right	Left	Thru	Right	Left	Thru	Right	Left	Thru	Right	Int. Total
07:00 AM	0	0	1	0	0	0	0	0	0	0	2	0	3
07:15 AM	0	0	1	0	0	0	0	0	0	0	2	0	3
07:30 AM	1	0	0	0	1	0	0	0	0	0	0	0	2
07:45 AM	0	0	0	0	0	1	0	0	0	0	1	0	2
Total	1	0	2	0	1	1	0	0	0	0	5	0	10
08:00 AM	1	0	0	0	1	0	0	0	0	0	1	0	3
08:15 AM	0	0	2	0	3	1	0	0	0	0	2	0	8
08:30 AM	0	0	1	0	0	0	0	0	0	0	0	0	1
08:45 AM	0	0	0	0	1	0	0	0	0	0	0	0	1
Total	1	0	3	0	5	1	0	0	0	0	3	0	13
09:00 AM	2	0	0	0	2	0	0	0	0	0	0	0	4
09:15 AM	0	0	0	0	0	2	0	0	1	0	2	0	5
09:30 AM	1	0	1	0	1	1	0	0	0	0	0	0	4
09:45 AM	1	0	0	0	1	0	1	0	0	0	1	0	4
Total	4	0	1	0	4	3	1	0	1	0	3	0	17
12:00 PM	0	0	0	0	1	0	0	0	0	0	0	0	1
12:15 PM	1	0	0	0	1	1	0	0	0	0	1	0	4
12:30 PM	2	0	0	0	0	1	0	0	0	0	1	0	4
12:45 PM	0	0	0	0	1	0	0	0	0	1	1	0	3
Total	3	0	0	0	3	2	0	0	0	1	3	0	12
01:00 PM	0	0	0	0	0	3	0	0	0	0	1	0	4
01:15 PM	0	0	0	0	0	1	0	0	0	0	3	0	4
01:30 PM	0	0	0	0	1	1	0	0	0	0	2	0	4
01:45 PM	2	0	1	0	0	1	0	0	0	0	0	0	4
Total	2	0	1	0	1	6	0	0	0	0	6	0	16
03:00 PM	1	0	0	0	2	0	0	0	0	1	2	0	6
03:15 PM	1	0	1	0	2	0	0	0	0	0	1	0	5
03:30 PM	2	0	0	0	1	1	0	0	0	0	1	0	5
03:45 PM	1	0	0	0	0	1	0	0	0	0	2	0	4
Total	5	0	1	0	5	2	0	0	0	1	6	0	20
04:00 PM	1	0	0	0	0	1	0	0	0	0	0	0	2
04:15 PM	1	0	0	0	0	1	0	0	0	0	1	0	3
04:30 PM	0	0	0	0	0	0	0	0	0	0	2	0	2
04:45 PM	0	0	0	0	1	0	0	0	0	1	0	0	2
Total	2	0	0	0	1	2	0	0	0	1	3	0	9
05:00 PM	1	0	0	0	1	0	0	0	0	0	3	0	5
05:15 PM	2	0	0	0	0	0	0	0	0	0	0	0	2
05:45 PM	1	0	1	0	1	1	0	0	0	0	1	0	5
Total	4	0	1	0	2	1	0	0	0	0	4	0	12
Grand Total	22	0	9	0	22	18	1	0	1	3	33	0	109
Apprch %	71	0	29	0	55	45	50	0	50	8.3	91.7	0	
Total %	20.2	0	8.3	0	20.2	16.5	0.9	0	0.9	2.8	30.3	0	

CITY TRAFFIC COUNTERS

626.991.7522

www.ctcounters.com

File Name : 5SBPaxton_2Axle
Site Code : 00000000
Start Date : 1/14/2014
Page No : 2

	I-5 SB Ramp Southbound				Paxton St Westbound				Sharp Ave Northbound				Paxton St Eastbound				
Start Time	Left	Thru	Right	App. Total	Left	Thru	Right	App. Total	Left	Thru	Right	App. Total	Left	Thru	Right	App. Total	Int. Total
Peak Hour Analysis From 07:00 AM to 09:45 AM - Peak 1 of 1																	
Peak Hour for Entire Intersection Begins at 09:00 AM																	
09:00 AM	**2**	0	0	**2**	0	**2**	0	**2**	0	0	0	0	0	0	0	0	4
09:15 AM	0	0	0	0	0	0	**2**	2	0	0	**1**	**1**	0	**2**	0	**2**	**5**
09:30 AM	1	0	**1**	2	0	1	1	2	0	0	0	0	0	0	0	0	4
09:45 AM	1	0	0	1	0	1	0	1	**1**	0	0	1	0	1	0	1	4
Total Volume	4	0	1	5	0	4	3	7	1	0	1	2	0	3	0	3	17
% App. Total	80	0	20		0	57.1	42.9		50	0	50		0	100	0		
PHF	.500	.000	.250	.625	.000	.500	.375	.875	.250	.000	.250	.500	.000	.375	.000	.375	.850

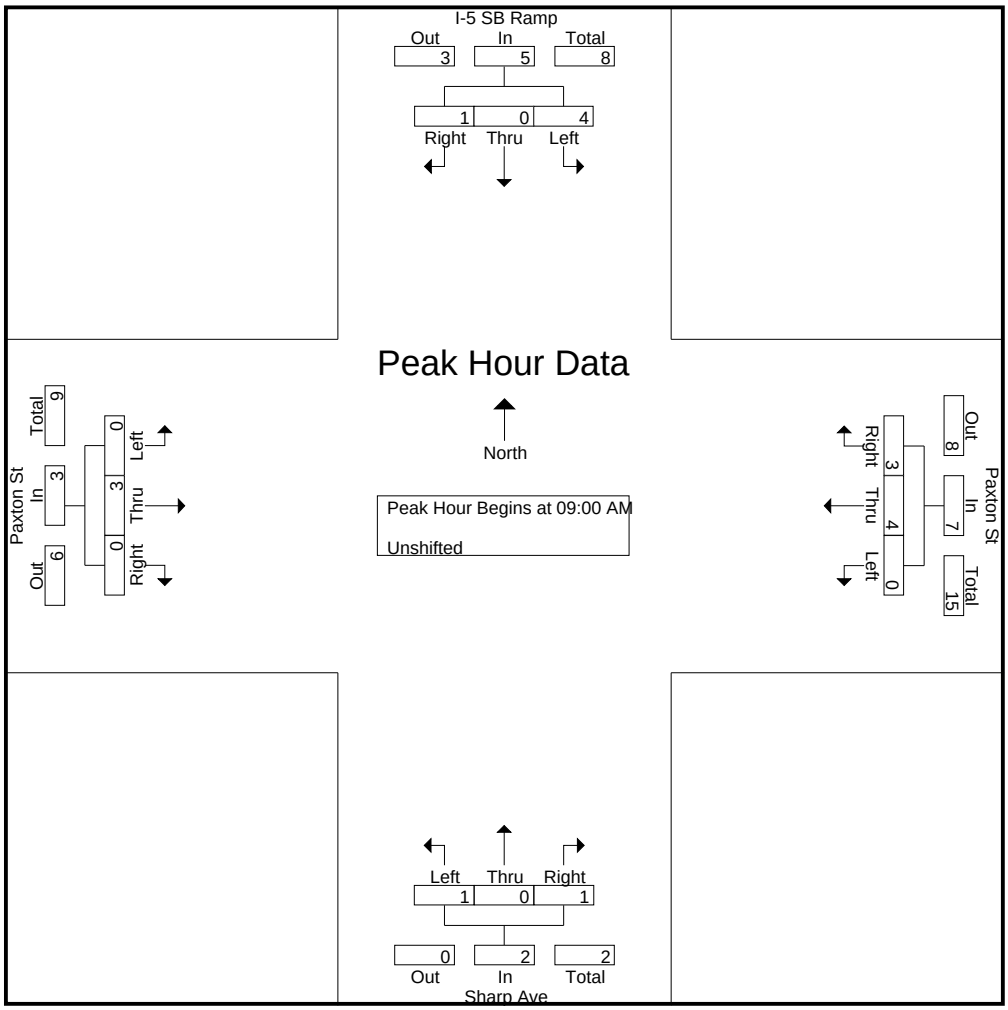

CITY TRAFFIC COUNTERS

626.991.7522

www.ctcounters.com

File Name : 5SBPaxton_2Axle
Site Code : 00000000
Start Date : 1/14/2014
Page No : 3

	I-5 SB Ramp Southbound				Paxton St Westbound				Sharp Ave Northbound				Paxton St Eastbound				
Start Time	Left	Thru	Right	App. Total	Left	Thru	Right	App. Total	Left	Thru	Right	App. Total	Left	Thru	Right	App. Total	Int. Total
Peak Hour Analysis From 10:00 AM to 01:45 PM - Peak 1 of 1																	
Peak Hour for Entire Intersection Begins at 01:00 PM																	
01:00 PM	0	0	0	0	0	0	**3**	**3**	0	0	0	0	0	1	0	1	**4**
01:15 PM	0	0	0	0	0	0	1	1	0	0	0	0	0	**3**	0	**3**	4
01:30 PM	0	0	0	0	0	**1**	1	2	0	0	0	0	0	2	0	2	4
01:45 PM	**2**	0	**1**	**3**	0	0	1	1	0	0	0	0	0	0	0	0	4
Total Volume	2	0	1	3	0	1	6	7	0	0	0	0	0	6	0	6	16
% App. Total	66.7	0	33.3		0	14.3	85.7		0	0	0		0	100	0		
PHF	.250	.000	.250	.250	.000	.250	.500	.583	.000	.000	.000	.000	.000	.500	.000	.500	1.00

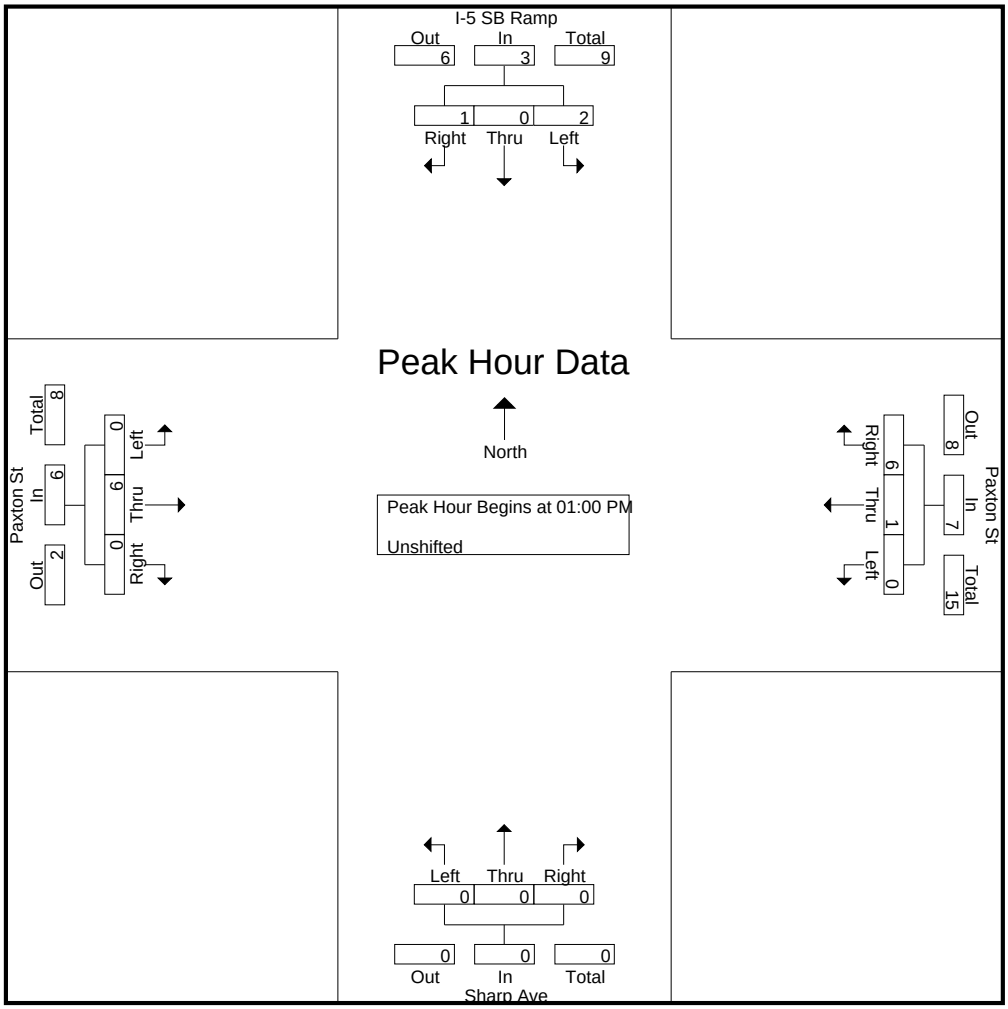

CITY TRAFFIC COUNTERS

626.991.7522

www.ctcounters.com

File Name : 5SBPaxton_2Axle
Site Code : 00000000
Start Date : 1/14/2014
Page No : 4

	I-5 SB Ramp Southbound				Paxton St Westbound				Sharp Ave Northbound				Paxton St Eastbound				
Start Time	Left	Thru	Right	App. Total	Left	Thru	Right	App. Total	Left	Thru	Right	App. Total	Left	Thru	Right	App. Total	Int. Total
Peak Hour Analysis From 02:00 PM to 05:45 PM - Peak 1 of 1																	
Peak Hour for Entire Intersection Begins at 03:00 PM																	
03:00 PM	1	0	0	1	0	**2**	0	**2**	0	0	0	0	**1**	**2**	0	**3**	**6**
03:15 PM	1	0	**1**	**2**	0	2	0	2	0	0	0	0	0	1	0	1	5
03:30 PM	**2**	0	0	2	0	1	**1**	2	0	0	0	0	0	1	0	1	5
03:45 PM	1	0	0	1	0	0	1	1	0	0	0	0	0	2	0	2	4
Total Volume	5	0	1	6	0	5	2	7	0	0	0	0	1	6	0	7	20
% App. Total	83.3	0	16.7		0	71.4	28.6		0	0	0		14.3	85.7	0		
PHF	.625	.000	.250	.750	.000	.625	.500	.875	.000	.000	.000	.000	.250	.750	.000	.583	.833

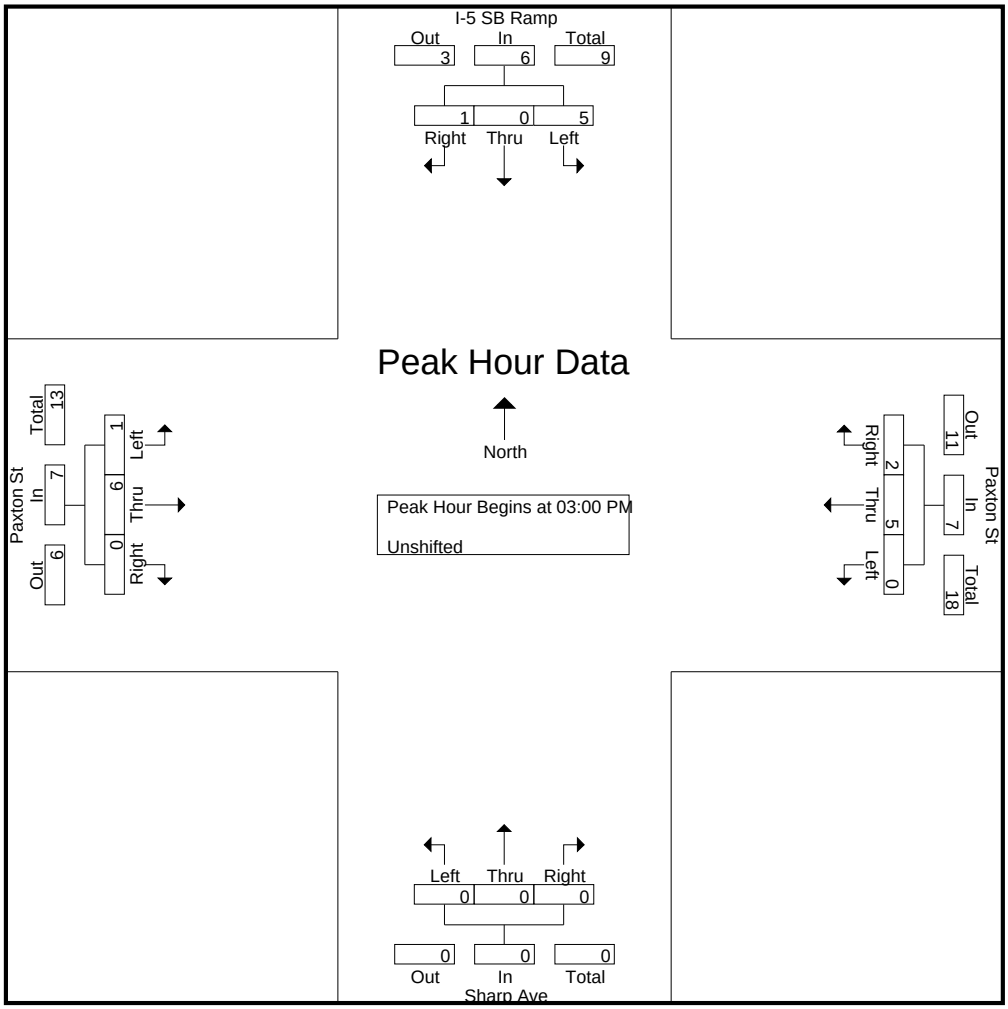

CITY TRAFFIC COUNTERS

626.991.7522

www.ctcounters.com

File Name : 5SBPaxton_3Axle
Site Code : 00000000
Start Date : 1/14/2014
Page No : 1

Groups Printed- Bank 1

	I-5 SB Ramp Southbound			Paxton St Westbound			Sharp Ave Northbound			Paxton St Eastbound			
Start Time	Left	Thru	Right	Left	Thru	Right	Left	Thru	Right	Left	Thru	Right	Int. Total
07:00 AM	0	0	0	0	0	0	0	0	0	1	0	0	1
07:15 AM	2	0	1	0	0	1	0	0	0	0	0	0	4
07:30 AM	1	0	1	0	0	0	0	0	0	0	0	0	2
07:45 AM	0	0	0	0	1	0	0	0	0	0	0	0	1
Total	3	0	2	0	1	1	0	0	0	1	0	0	8
08:00 AM	0	0	0	0	3	2	0	0	0	0	0	0	5
08:30 AM	0	0	1	0	0	0	0	0	0	0	0	0	1
08:45 AM	1	0	0	0	1	0	0	0	0	0	0	0	2
Total	1	0	1	0	4	2	0	0	0	0	0	0	8
09:00 AM	0	0	1	0	0	0	0	0	0	0	0	0	1
Total	0	0	1	0	0	0	0	0	0	0	0	0	1
12:45 PM	0	0	0	0	2	0	0	0	0	0	0	0	2
Total	0	0	0	0	2	0	0	0	0	0	0	0	2
01:00 PM	0	0	0	0	0	0	0	0	0	1	0	0	1
01:30 PM	0	0	0	0	1	0	0	0	0	0	0	0	1
Total	0	0	0	0	1	0	0	0	0	1	0	0	2
03:15 PM	0	0	1	0	0	0	0	0	0	0	1	0	2
03:30 PM	0	0	0	0	0	0	0	0	0	0	1	0	1
03:45 PM	1	1	0	0	0	0	0	0	0	0	1	0	3
Total	1	1	1	0	0	0	0	0	0	0	3	0	6
04:15 PM	0	0	0	0	0	0	0	0	0	0	1	0	1
Total	0	0	0	0	0	0	0	0	0	0	1	0	1
05:15 PM	0	0	1	0	0	0	0	0	0	0	0	0	1
Total	0	0	1	0	0	0	0	0	0	0	0	0	1
Grand Total	5	1	6	0	8	3	0	0	0	2	4	0	29
Apprch %	41.7	8.3	50	0	72.7	27.3	0	0	0	33.3	66.7	0	
Total %	17.2	3.4	20.7	0	27.6	10.3	0	0	0	6.9	13.8	0	

CITY TRAFFIC COUNTERS

626.991.7522

www.ctcounters.com

File Name : 5SBPaxton_3Axle
Site Code : 00000000
Start Date : 1/14/2014
Page No : 2

	I-5 SB Ramp Southbound				Paxton St Westbound				Sharp Ave Northbound				Paxton St Eastbound				
Start Time	Left	Thru	Right	App. Total	Left	Thru	Right	App. Total	Left	Thru	Right	App. Total	Left	Thru	Right	App. Total	Int. Total
Peak Hour Analysis From 07:00 AM to 09:45 AM - Peak 1 of 1																	
Peak Hour for Entire Intersection Begins at 07:15 AM																	
07:15 AM	**2**	0	**1**	**3**	0	0	1	1	0	0	0	0	0	0	0	0	4
07:30 AM	1	0	1	2	0	0	0	0	0	0	0	0	0	0	0	0	2
07:45 AM	0	0	0	0	0	1	0	1	0	0	0	0	0	0	0	0	1
08:00 AM	0	0	0	0	0	**3**	**2**	**5**	0	0	0	0	0	0	0	0	**5**
Total Volume	3	0	2	5	0	4	3	7	0	0	0	0	0	0	0	0	12
% App. Total	60	0	40		0	57.1	42.9		0	0	0		0	0	0		
PHF	.375	.000	.500	.417	.000	.333	.375	.350	.000	.000	.000	.000	.000	.000	.000	.000	.600

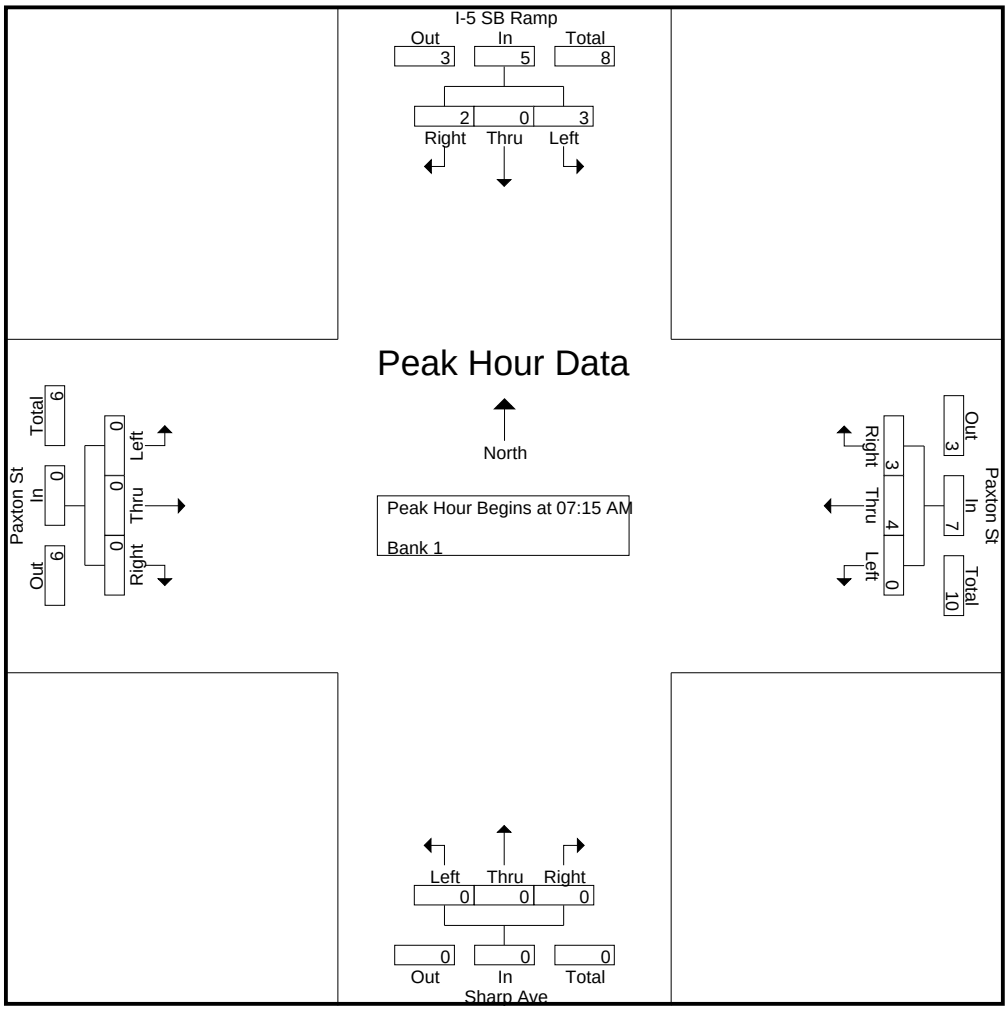

CITY TRAFFIC COUNTERS

626.991.7522

www.ctcounters.com

File Name : 5SBPaxton_3Axle
Site Code : 00000000
Start Date : 1/14/2014
Page No : 3

	I-5 SB Ramp Southbound				Paxton St Westbound				Sharp Ave Northbound				Paxton St Eastbound				
Start Time	Left	Thru	Right	App. Total	Left	Thru	Right	App. Total	Left	Thru	Right	App. Total	Left	Thru	Right	App. Total	Int. Total
Peak Hour Analysis From 10:00 AM to 01:45 PM - Peak 1 of 1																	
Peak Hour for Entire Intersection Begins at 12:45 PM																	
12:45 PM	0	0	0	0	0	**2**	0	**2**	0	0	0	0	0	0	0	0	**2**
01:00 PM	0	0	0	0	0	0	0	0	0	0	0	0	**1**	0	0	**1**	1
01:15 PM	0	0	0	0	0	0	0	0	0	0	0	0	0	0	0	0	0
01:30 PM	0	0	0	0	0	1	0	1	0	0	0	0	0	0	0	0	1
Total Volume	0	0	0	0	0	3	0	3	0	0	0	0	1	0	0	1	4
% App. Total	0	0	0		0	100	0		0	0	0		100	0	0		
PHF	.000	.000	.000	.000	.000	.375	.000	.375	.000	.000	.000	.000	.250	.000	.000	.250	.500

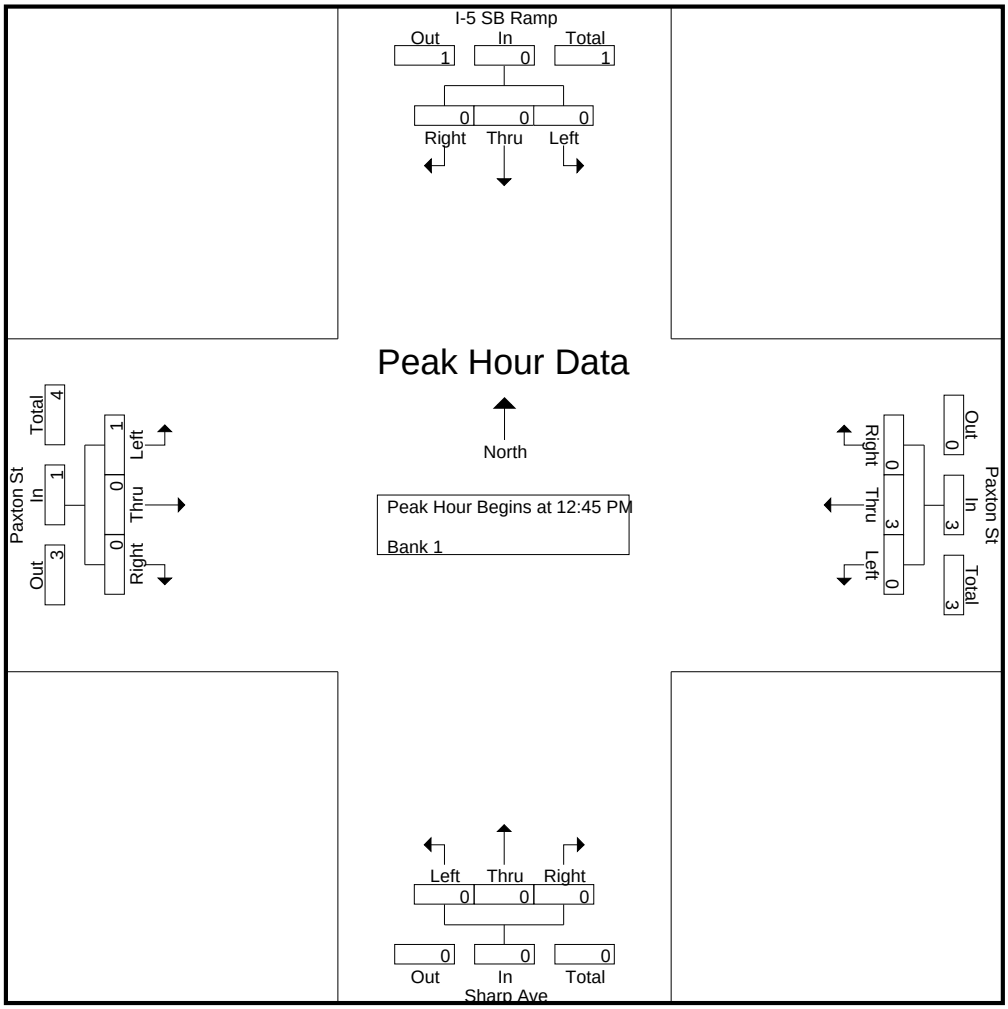

CITY TRAFFIC COUNTERS

626.991.7522

www.ctcounters.com

File Name : 5SBPaxton_3Axle
Site Code : 00000000
Start Date : 1/14/2014
Page No : 4

	I-5 SB Ramp Southbound				Paxton St Westbound				Sharp Ave Northbound				Paxton St Eastbound				
Start Time	Left	Thru	Right	App. Total	Left	Thru	Right	App. Total	Left	Thru	Right	App. Total	Left	Thru	Right	App. Total	Int. Total
Peak Hour Analysis From 02:00 PM to 05:45 PM - Peak 1 of 1																	
Peak Hour for Entire Intersection Begins at 03:00 PM																	
03:00 PM	0	0	0	0	0	0	0	0	0	0	0	0	0	0	0	0	0
03:15 PM	0	0	**1**	1	0	0	0	0	0	0	0	0	0	**1**	0	**1**	2
03:30 PM	0	0	0	0	0	0	0	0	0	0	0	0	0	1	0	1	1
03:45 PM	**1**	**1**	0	**2**	0	0	0	0	0	0	0	0	0	1	0	1	**3**
Total Volume	1	1	1	3	0	0	0	0	0	0	0	0	0	3	0	3	6
% App. Total	33.3	33.3	33.3		0	0	0		0	0	0		0	100	0		
PHF	.250	.250	.250	.375	.000	.000	.000	.000	.000	.000	.000	.000	.000	.750	.000	.750	.500

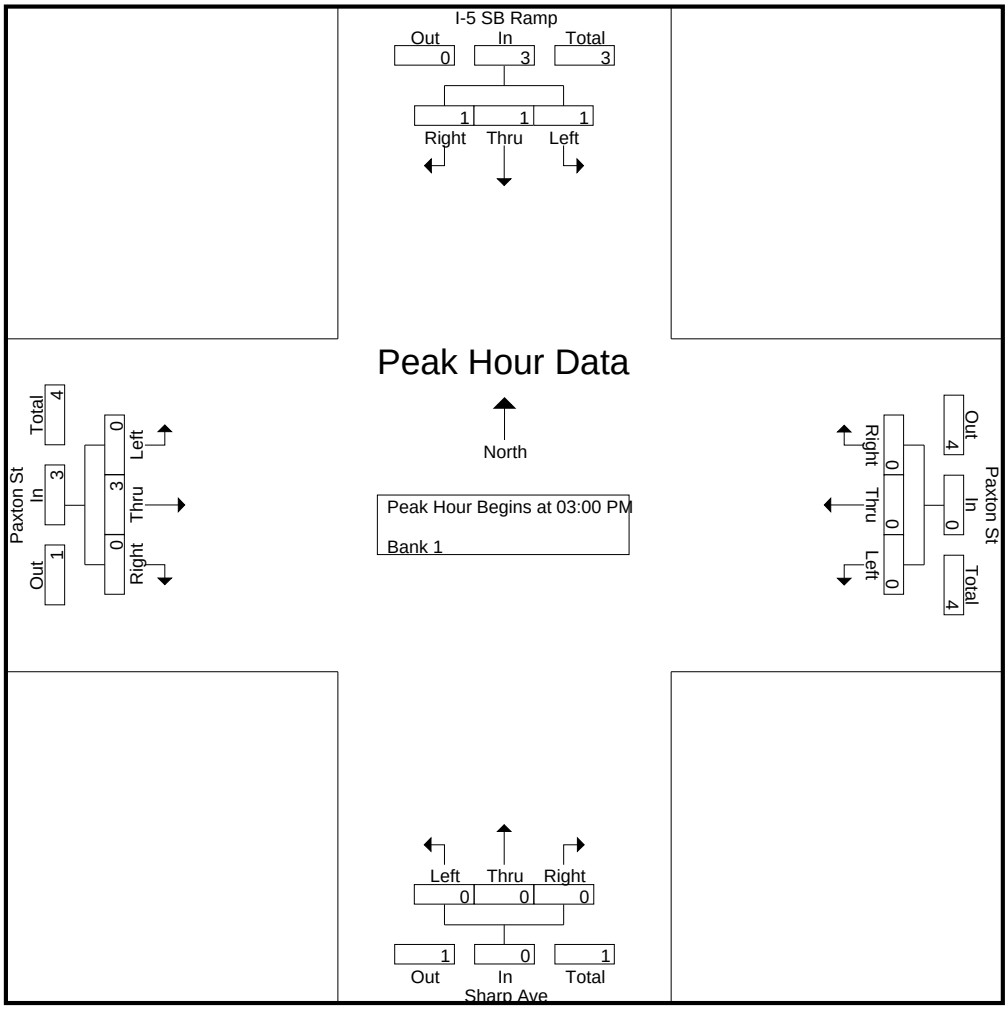

CITY TRAFFIC COUNTERS

626.991.7522

www.ctcounters.com

File Name : 5SBPaxton_4Axle
Site Code : 00000000
Start Date : 1/14/2014
Page No : 1

Groups Printed- Bank 2

	I-5 SB Ramp Southbound			Paxton St Westbound			Sharp Ave Northbound			Paxton St Eastbound			
Start Time	Left	Thru	Right	Left	Thru	Right	Left	Thru	Right	Left	Thru	Right	Int. Total
07:00 AM	0	0	0	0	1	0	0	0	0	0	0	0	1
07:45 AM	0	0	0	0	2	0	0	0	0	0	0	0	2
Total	0	0	0	0	3	0	0	0	0	0	0	0	3
08:00 AM	0	0	0	0	0	0	0	0	0	0	1	0	1
08:30 AM	1	0	0	0	0	0	0	0	0	0	0	0	1
Total	1	0	0	0	0	0	0	0	0	0	1	0	2
01:45 PM	0	0	0	0	0	0	0	0	0	1	2	0	3
Total	0	0	0	0	0	0	0	0	0	1	2	0	3
03:00 PM	0	0	0	0	1	0	0	0	0	0	0	0	1
03:15 PM	0	0	0	0	0	0	0	0	0	0	1	0	1
03:30 PM	0	0	0	0	0	1	0	0	0	0	0	0	1
03:45 PM	1	0	0	0	0	0	0	0	0	0	0	0	1
Total	1	0	0	0	1	1	0	0	0	0	1	0	4
05:00 PM	0	0	0	0	0	1	0	0	0	0	0	0	1
05:30 PM	0	0	0	0	0	0	0	0	0	0	1	0	1
Total	0	0	0	0	0	1	0	0	0	0	1	0	2
Grand Total	2	0	0	0	4	2	0	0	0	1	5	0	14
Apprch %	100	0	0	0	66.7	33.3	0	0	0	16.7	83.3	0	
Total %	14.3	0	0	0	28.6	14.3	0	0	0	7.1	35.7	0	

CITY TRAFFIC COUNTERS

626.991.7522

www.ctcounters.com

File Name : 5SBPaxton_4Axle
Site Code : 00000000
Start Date : 1/14/2014
Page No : 2

	I-5 SB Ramp Southbound				Paxton St Westbound				Sharp Ave Northbound				Paxton St Eastbound				
Start Time	Left	Thru	Right	App. Total	Left	Thru	Right	App. Total	Left	Thru	Right	App. Total	Left	Thru	Right	App. Total	Int. Total
Peak Hour Analysis From 07:00 AM to 09:45 AM - Peak 1 of 1																	
Peak Hour for Entire Intersection Begins at 07:45 AM																	
07:45 AM	0	0	0	0	0	**2**	0	**2**	0	0	0	0	0	0	0	0	**2**
08:00 AM	0	0	0	0	0	0	0	0	0	0	0	0	0	**1**	0	**1**	1
08:15 AM	0	0	0	0	0	0	0	0	0	0	0	0	0	0	0	0	0
08:30 AM	**1**	0	0	**1**	0	0	0	0	0	0	0	0	0	0	0	0	1
Total Volume	1	0	0	1	0	2	0	2	0	0	0	0	0	1	0	1	4
% App. Total	100	0	0		0	100	0		0	0	0		0	100	0		
PHF	.250	.000	.000	.250	.000	.250	.000	.250	.000	.000	.000	.000	.000	.250	.000	.250	.500

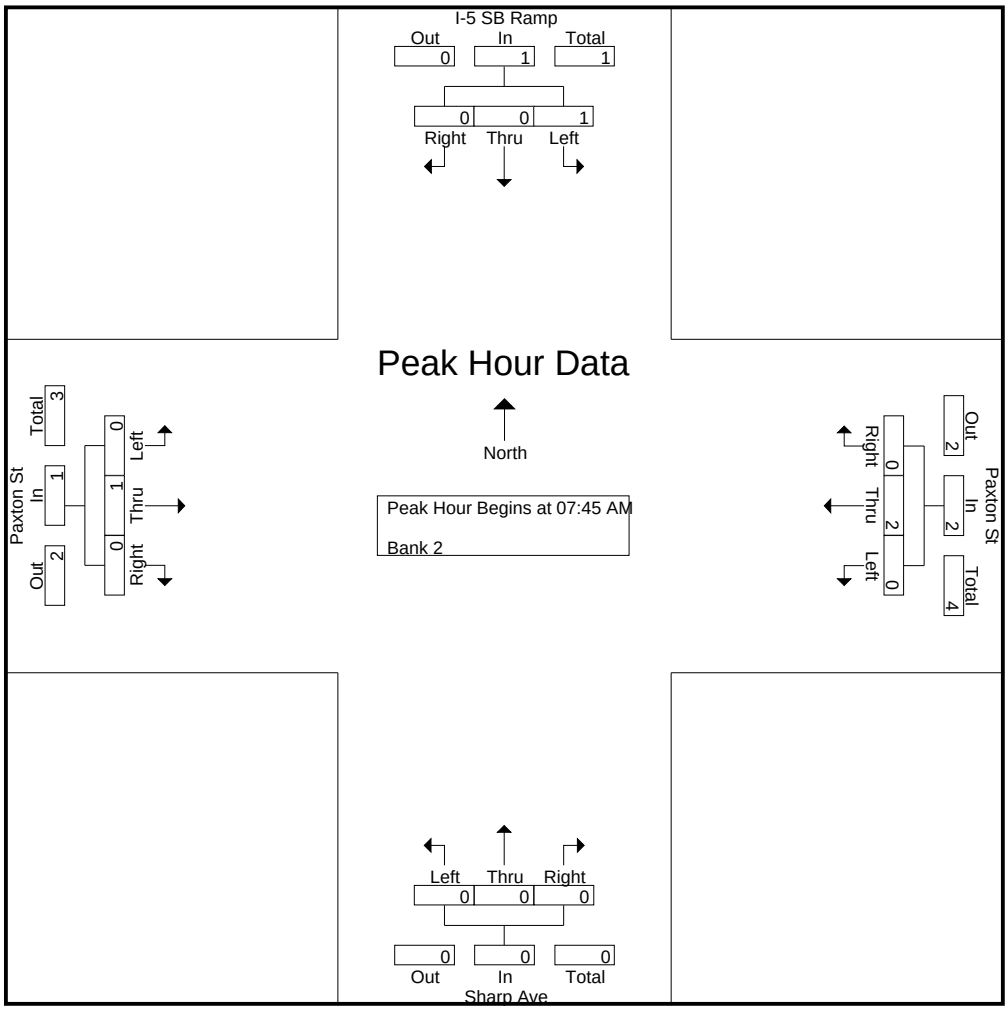

CITY TRAFFIC COUNTERS

626.991.7522

www.ctcounters.com

File Name : 5SBPaxton_4Axle
Site Code : 00000000
Start Date : 1/14/2014
Page No : 3

	I-5 SB Ramp Southbound				Paxton St Westbound				Sharp Ave Northbound				Paxton St Eastbound				
Start Time	Left	Thru	Right	App. Total	Left	Thru	Right	App. Total	Left	Thru	Right	App. Total	Left	Thru	Right	App. Total	Int. Total
Peak Hour Analysis From 10:00 AM to 01:45 PM - Peak 1 of 1																	
Peak Hour for Entire Intersection Begins at 01:00 PM																	
01:00 PM	0	0	0	0	0	0	0	0	0	0	0	0	0	0	0	0	0
01:15 PM	0	0	0	0	0	0	0	0	0	0	0	0	0	0	0	0	0
01:30 PM	0	0	0	0	0	0	0	0	0	0	0	0	0	0	0	0	0
01:45 PM	0	0	0	0	0	0	0	0	0	0	0	0	**1**	**2**	0	**3**	**3**
Total Volume	0	0	0	0	0	0	0	0	0	0	0	0	1	2	0	3	3
% App. Total	0	0	0		0	0	0		0	0	0		33.3	66.7	0		
PHF	.000	.000	.000	.000	.000	.000	.000	.000	.000	.000	.000	.000	.250	.250	.000	.250	.250

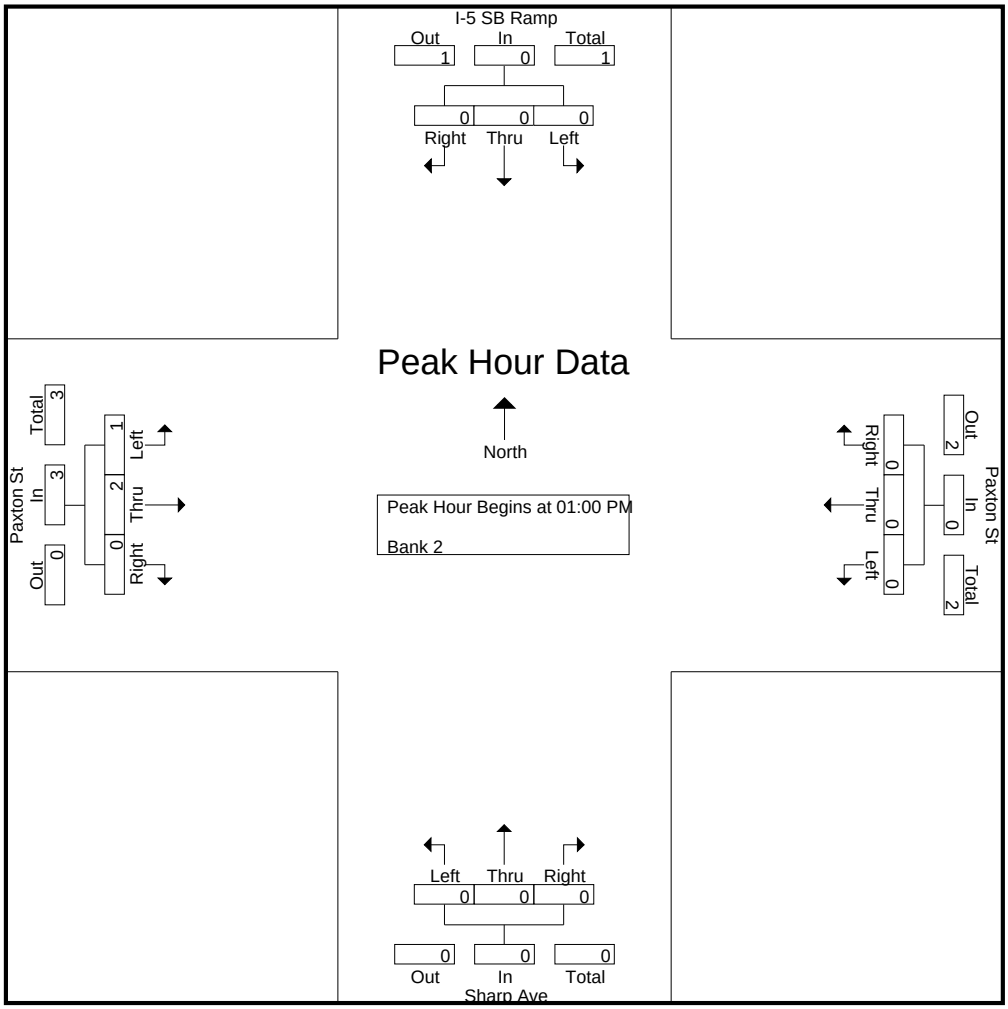

CITY TRAFFIC COUNTERS

626.991.7522

www.ctcounters.com

File Name : 5SBPaxton_4Axle
Site Code : 00000000
Start Date : 1/14/2014
Page No : 4

	I-5 SB Ramp Southbound				Paxton St Westbound				Sharp Ave Northbound				Paxton St Eastbound				
Start Time	Left	Thru	Right	App. Total	Left	Thru	Right	App. Total	Left	Thru	Right	App. Total	Left	Thru	Right	App. Total	Int. Total
Peak Hour Analysis From 02:00 PM to 05:45 PM - Peak 1 of 1																	
Peak Hour for Entire Intersection Begins at 03:00 PM																	
03:00 PM	0	0	0	0	0	**1**	0	**1**	0	0	0	0	0	0	0	0	**1**
03:15 PM	0	0	0	0	0	0	0	0	0	0	0	0	0	**1**	0	**1**	1
03:30 PM	0	0	0	0	0	0	**1**	1	0	0	0	0	0	0	0	0	1
03:45 PM	**1**	0	0	**1**	0	0	0	0	0	0	0	0	0	0	0	0	1
Total Volume	1	0	0	1	0	1	1	2	0	0	0	0	0	1	0	1	4
% App. Total	100	0	0		0	50	50		0	0	0		0	100	0		
PHF	.250	.000	.000	.250	.000	.250	.250	.500	.000	.000	.000	.000	.000	.250	.000	.250	1.00

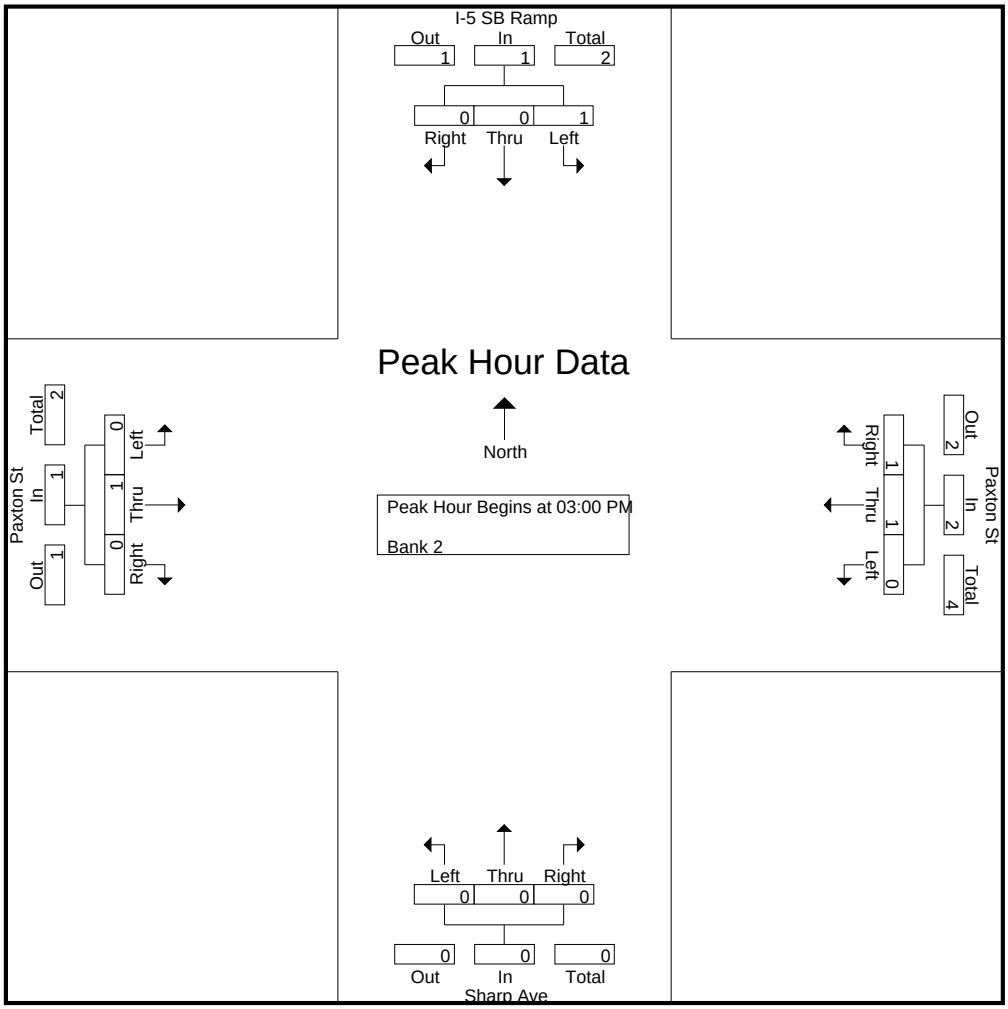

CITY TRAFFIC COUNTERS

626.991.7522

www.ctcounters.com

File Name : 5SBPaxton_5Axle
Site Code : 00000000
Start Date : 1/14/2014
Page No : 1

Groups Printed- Unshifted

	I-5 SB Ramp Southbound			Paxton St Westbound			Sharp Ave Northbound			Paxton St Eastbound			
Start Time	Left	Thru	Right	Left	Thru	Right	Left	Thru	Right	Left	Thru	Right	Int. Total
07:00 AM	1	0	1	0	0	0	0	0	0	0	0	0	2
07:30 AM	1	0	0	0	0	0	0	0	0	1	0	0	2
07:45 AM	1	0	0	0	0	0	0	0	0	0	0	0	1
Total	3	0	1	0	0	0	0	0	0	1	0	0	5
08:15 AM	1	0	1	0	0	0	0	0	0	0	0	0	2
08:30 AM	1	0	0	0	0	0	0	0	0	0	0	0	1
Total	2	0	1	0	0	0	0	0	0	0	0	0	3
09:00 AM	2	0	0	0	0	1	0	0	0	0	0	0	3
09:15 AM	1	0	0	0	0	0	0	0	0	1	0	0	2
09:30 AM	1	0	0	0	0	0	0	0	0	0	0	0	1
09:45 AM	1	0	0	0	0	0	0	0	0	0	0	0	1
Total	5	0	0	0	0	1	0	0	0	1	0	0	7
12:00 PM	0	0	0	0	1	0	0	0	0	0	0	0	1
12:15 PM	2	0	0	0	0	0	0	0	0	0	0	0	2
12:30 PM	0	0	0	0	1	0	0	0	0	0	0	0	1
Total	2	0	0	0	2	0	0	0	0	0	0	0	4
04:15 PM	1	0	0	0	0	0	0	0	0	0	0	0	1
04:30 PM	0	0	0	0	0	0	0	0	0	1	0	0	1
Total	1	0	0	0	0	0	0	0	0	1	0	0	2
05:30 PM	0	0	1	0	0	0	0	0	0	0	0	0	1
05:45 PM	0	0	0	0	0	1	0	0	0	0	0	0	1
Total	0	0	1	0	0	1	0	0	0	0	0	0	2
Grand Total	13	0	3	0	2	2	0	0	0	3	0	0	23
Apprch %	81.2	0	18.8	0	50	50	0	0	0	100	0	0	
Total %	56.5	0	13	0	8.7	8.7	0	0	0	13	0	0	

CITY TRAFFIC COUNTERS

626.991.7522

www.ctcounters.com

File Name : 5SBPaxton_5Axle
Site Code : 00000000
Start Date : 1/14/2014
Page No : 2

	I-5 SB Ramp Southbound				Paxton St Westbound				Sharp Ave Northbound				Paxton St Eastbound				
Start Time	Left	Thru	Right	App. Total	Left	Thru	Right	App. Total	Left	Thru	Right	App. Total	Left	Thru	Right	App. Total	Int. Total
Peak Hour Analysis From 07:00 AM to 09:45 AM - Peak 1 of 1																	
Peak Hour for Entire Intersection Begins at 09:00 AM																	
09:00 AM	**2**	0	0	**2**	0	0	**1**	**1**	0	0	0	0	0	0	0	0	**3**
09:15 AM	1	0	0	1	0	0	0	0	0	0	0	0	**1**	0	0	**1**	2
09:30 AM	1	0	0	1	0	0	0	0	0	0	0	0	0	0	0	0	1
09:45 AM	1	0	0	1	0	0	0	0	0	0	0	0	0	0	0	0	1
Total Volume	5	0	0	5	0	0	1	1	0	0	0	0	1	0	0	1	7
% App. Total	100	0	0		0	0	100		0	0	0		100	0	0		
PHF	.625	.000	.000	.625	.000	.000	.250	.250	.000	.000	.000	.000	.250	.000	.000	.250	.583

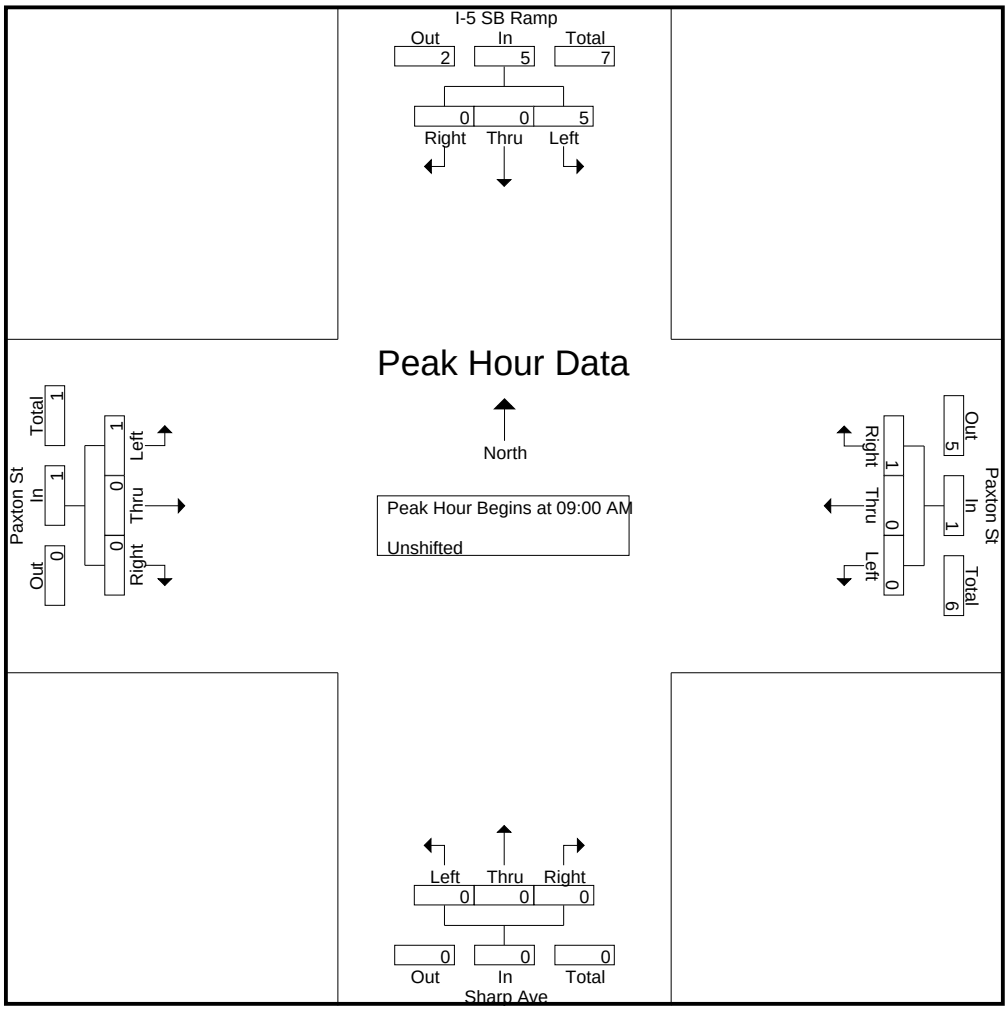

CITY TRAFFIC COUNTERS

626.991.7522

www.ctcounters.com

File Name : 5SBPaxton_5Axle
Site Code : 00000000
Start Date : 1/14/2014
Page No : 3

	I-5 SB Ramp Southbound				Paxton St Westbound				Sharp Ave Northbound				Paxton St Eastbound				
Start Time	Left	Thru	Right	App. Total	Left	Thru	Right	App. Total	Left	Thru	Right	App. Total	Left	Thru	Right	App. Total	Int. Total
Peak Hour Analysis From 10:00 AM to 01:45 PM - Peak 1 of 1																	
Peak Hour for Entire Intersection Begins at 11:45 AM																	
11:45 AM	0	0	0	0	0	0	0	0	0	0	0	0	0	0	0	0	0
12:00 PM	0	0	0	0	0	**1**	0	**1**	0	0	0	0	0	0	0	0	1
12:15 PM	**2**	0	0	**2**	0	0	0	0	0	0	0	0	0	0	0	0	**2**
12:30 PM	0	0	0	0	0	1	0	1	0	0	0	0	0	0	0	0	1
Total Volume	2	0	0	2	0	2	0	2	0	0	0	0	0	0	0	0	4
% App. Total	100	0	0		0	100	0		0	0	0		0	0	0		
PHF	.250	.000	.000	.250	.000	.500	.000	.500	.000	.000	.000	.000	.000	.000	.000	.000	.500

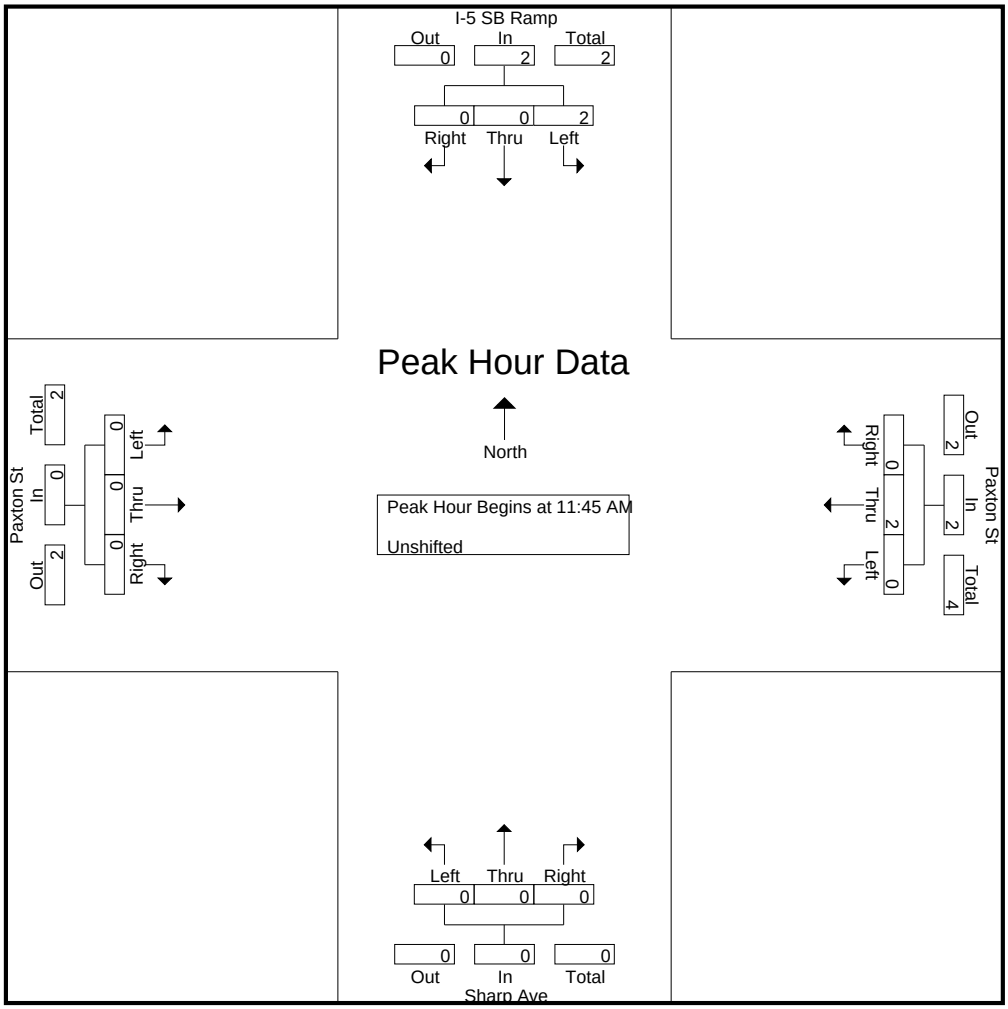

CITY TRAFFIC COUNTERS

626.991.7522

www.ctcounters.com

File Name : 5SBPaxton_5Axle
Site Code : 00000000
Start Date : 1/14/2014
Page No : 4

	I-5 SB Ramp Southbound				Paxton St Westbound				Sharp Ave Northbound				Paxton St Eastbound				
Start Time	Left	Thru	Right	App. Total	Left	Thru	Right	App. Total	Left	Thru	Right	App. Total	Left	Thru	Right	App. Total	Int. Total
Peak Hour Analysis From 02:00 PM to 05:45 PM - Peak 1 of 1																	
Peak Hour for Entire Intersection Begins at 03:45 PM																	
03:45 PM	0	0	0	0	0	0	0	0	0	0	0	0	0	0	0	0	0
04:00 PM	0	0	0	0	0	0	0	0	0	0	0	0	0	0	0	0	0
04:15 PM	**1**	0	0	**1**	0	0	0	0	0	0	0	0	0	0	0	0	**1**
04:30 PM	0	0	0	0	0	0	0	0	0	0	0	0	**1**	0	0	**1**	1
Total Volume	1	0	0	1	0	0	0	0	0	0	0	0	1	0	0	1	2
% App. Total	100	0	0		0	0	0		0	0	0		100	0	0		
PHF	.250	.000	.000	.250	.000	.000	.000	.000	.000	.000	.000	.000	.250	.000	.000	.250	.500

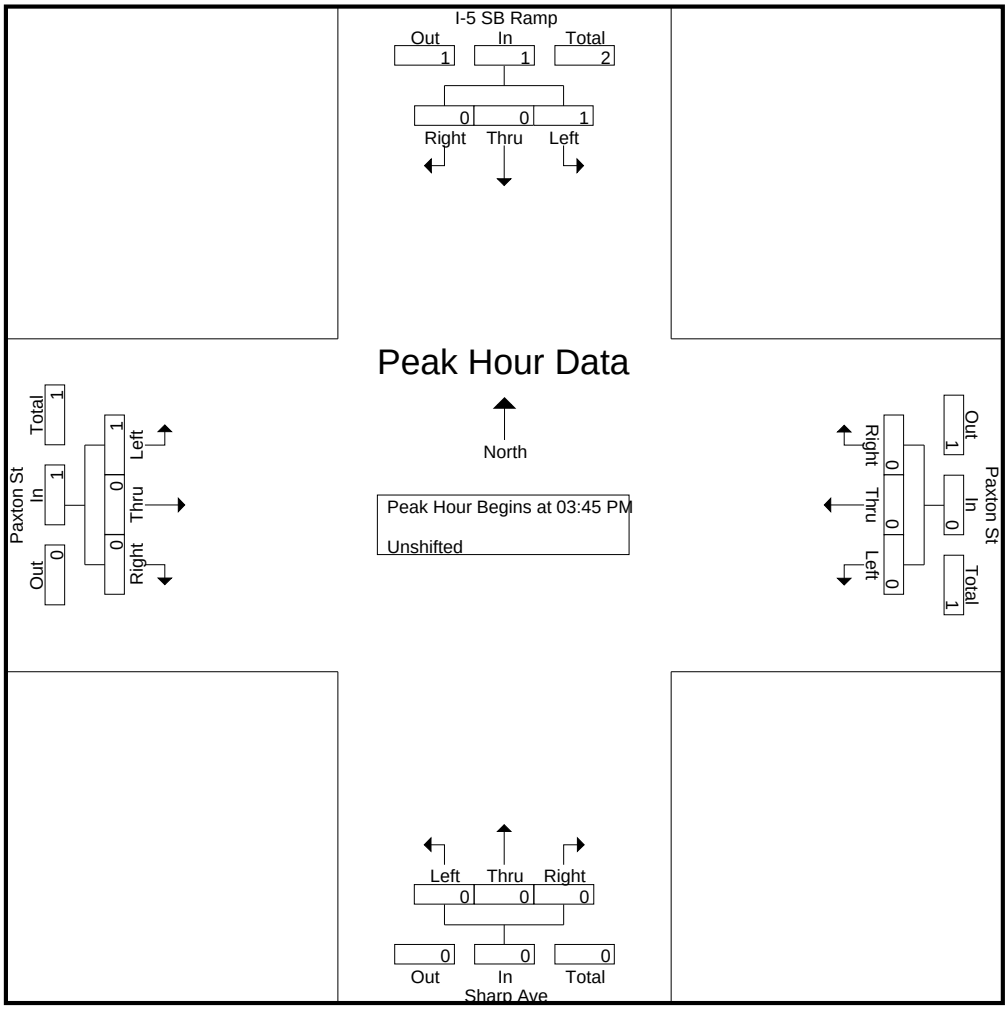

CITY TRAFFIC COUNTERS

626.991.7522

www.ctcounters.com

File Name : 5NBPaxton
Site Code : 00000000
Start Date : 1/14/2014
Page No : 1

Groups Printed- Unshifted

	I-5 NB Ramp Southbound			Paxton St Westbound			Remick Ave Northbound			Paxton St Eastbound			
Start Time	Left	Thru	Right	Left	Thru	Right	Left	Thru	Right	Left	Thru	Right	Int. Total
07:00 AM	2	0	5	4	141	23	1	4	10	31	97	3	321
07:15 AM	3	0	20	8	144	19	4	6	15	46	106	11	382
07:30 AM	7	1	7	14	165	25	5	3	26	63	126	8	450
07:45 AM	4	0	5	19	143	20	2	4	18	45	107	5	372
Total	16	1	37	45	593	87	12	17	69	185	436	27	1525
08:00 AM	5	1	2	3	112	19	3	4	7	27	124	5	312
08:15 AM	7	0	8	1	99	19	1	3	7	21	100	4	270
08:30 AM	5	0	5	5	103	12	1	0	15	24	77	1	248
08:45 AM	0	0	3	2	92	15	2	2	8	22	85	2	233
Total	17	1	18	11	406	65	7	9	37	94	386	12	1063
09:00 AM	5	0	5	4	87	14	2	3	5	20	98	4	247
09:15 AM	5	2	1	2	77	18	4	2	8	16	64	4	203
09:30 AM	3	1	4	3	66	12	3	2	7	13	69	2	185
09:45 AM	4	1	7	2	67	13	1	4	9	11	67	1	187
Total	17	4	17	11	297	57	10	11	29	60	298	11	822
12:00 PM	1	1	2	28	55	1	10	0	3	10	73	10	194
12:15 PM	6	0	5	9	67	6	2	3	3	7	75	5	188
12:30 PM	17	0	7	2	67	13	0	1	6	11	70	3	197
12:45 PM	7	0	12	1	60	23	2	2	10	14	62	2	195
Total	31	1	26	40	249	43	14	6	22	42	280	20	774
01:00 PM	10	1	16	2	79	24	2	7	5	15	77	3	241
01:15 PM	7	2	16	1	88	17	1	6	15	20	67	2	242
01:30 PM	12	0	18	3	80	24	6	1	4	19	85	8	260
01:45 PM	16	0	9	6	87	13	6	8	6	24	98	11	284
Total	45	3	59	12	334	78	15	22	30	78	327	24	1027
03:00 PM	17	0	16	7	86	17	3	7	11	36	84	3	287
03:15 PM	17	3	12	4	96	26	0	1	10	32	84	11	296
03:30 PM	18	1	12	8	101	29	0	1	6	44	120	3	343
03:45 PM	4	0	11	5	95	32	4	1	12	42	119	10	335
Total	56	4	51	24	378	104	7	10	39	154	407	27	1261
04:00 PM	19	0	12	9	109	43	0	2	11	35	106	7	353
04:15 PM	15	0	10	11	95	49	2	2	13	42	112	3	354
04:30 PM	20	2	7	4	117	42	2	3	10	52	146	11	416
04:45 PM	11	2	10	2	114	46	4	2	9	57	131	3	391
Total	65	4	39	26	435	180	8	9	43	186	495	24	1514
05:00 PM	9	0	19	3	117	43	0	1	14	46	145	4	401
05:15 PM	17	0	18	5	112	53	0	2	9	54	140	2	412
05:30 PM	15	0	21	10	111	49	1	1	7	50	135	8	408
05:45 PM	14	0	17	7	111	44	1	2	9	49	133	7	394
Total	55	0	75	25	451	189	2	6	39	199	553	21	1615
Grand Total	302	18	322	194	3143	803	75	90	308	998	3182	166	9601
Apprch %	47	2.8	50.2	4.7	75.9	19.4	15.9	19	65.1	23	73.2	3.8	
Total %	3.1	0.2	3.4	2	32.7	8.4	0.8	0.9	3.2	10.4	33.1	1.7	

CITY TRAFFIC COUNTERS

626.991.7522

www.ctcounters.com

File Name : 5NBPaxton
Site Code : 00000000
Start Date : 1/14/2014
Page No : 2

	I-5 NB Ramp Southbound				Paxton St Westbound				Remick Ave Northbound				Paxton St Eastbound				
Start Time	Left	Thru	Right	App. Total	Left	Thru	Right	App. Total	Left	Thru	Right	App. Total	Left	Thru	Right	App. Total	Int. Total
Peak Hour Analysis From 07:00 AM to 09:45 AM - Peak 1 of 1																	
Peak Hour for Entire Intersection Begins at 07:00 AM																	
07:00 AM	2	0	5	7	4	141	23	168	1	4	10	15	31	97	3	131	321
07:15 AM	3	0	**20**	**23**	8	144	19	171	4	**6**	15	25	46	106	**11**	163	382
07:30 AM	**7**	**1**	7	15	14	**165**	**25**	**204**	**5**	3	**26**	**34**	**63**	**126**	8	**197**	**450**
07:45 AM	4	0	5	9	**19**	143	20	182	2	4	18	24	45	107	5	157	372
Total Volume	16	1	37	54	45	593	87	725	12	17	69	98	185	436	27	648	1525
% App. Total	29.6	1.9	68.5		6.2	81.8	12		12.2	17.3	70.4		28.5	67.3	4.2		
PHF	.571	.250	.463	.587	.592	.898	.870	.888	.600	.708	.663	.721	.734	.865	.614	.822	.847

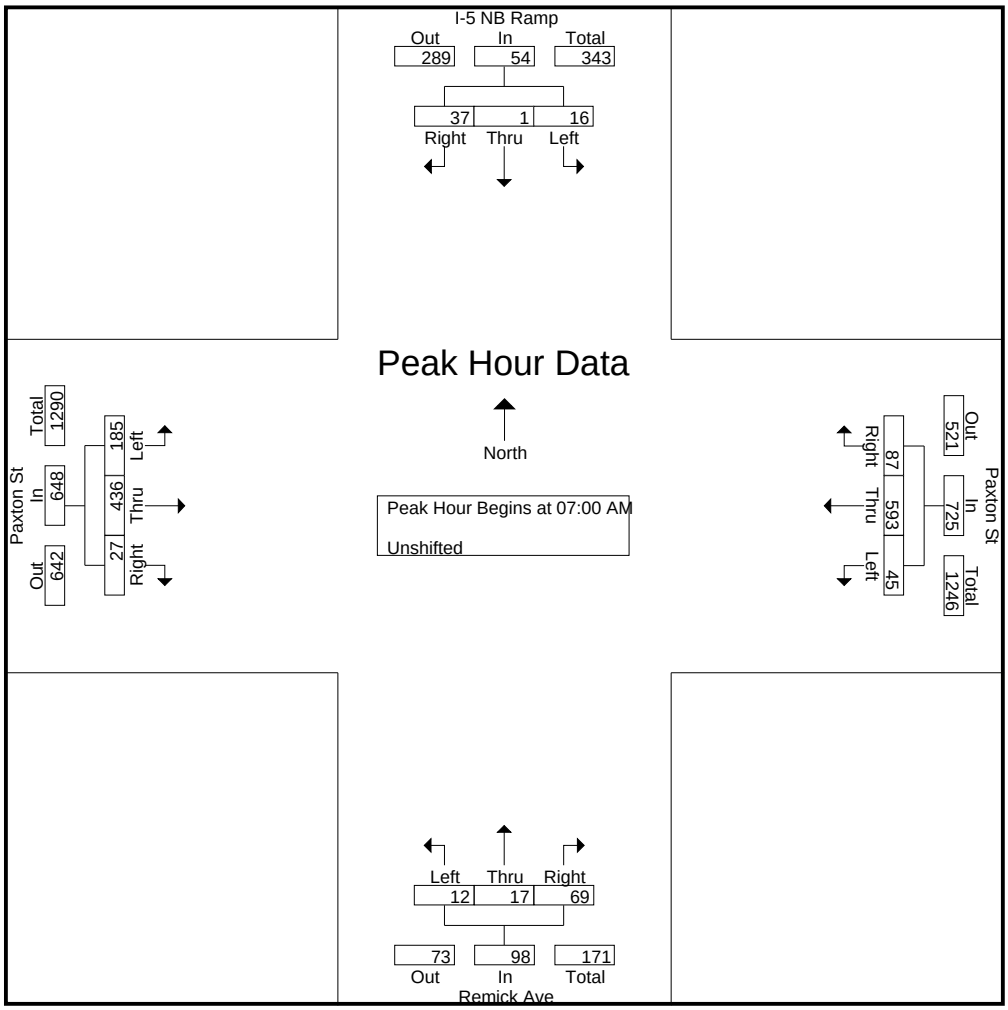

CITY TRAFFIC COUNTERS

626.991.7522

www.ctcounters.com

File Name : 5NBPaxton
Site Code : 00000000
Start Date : 1/14/2014
Page No : 3

	I-5 NB Ramp Southbound				Paxton St Westbound				Remick Ave Northbound				Paxton St Eastbound				
Start Time	Left	Thru	Right	App. Total	Left	Thru	Right	App. Total	Left	Thru	Right	App. Total	Left	Thru	Right	App. Total	Int. Total
Peak Hour Analysis From 10:00 AM to 01:45 PM - Peak 1 of 1																	
Peak Hour for Entire Intersection Begins at 01:00 PM																	
01:00 PM	10	1	16	27	2	79	**24**	105	2	7	5	14	15	77	3	95	241
01:15 PM	7	**2**	16	25	1	**88**	17	106	1	6	**15**	**22**	20	67	2	89	242
01:30 PM	12	0	**18**	**30**	3	80	24	**107**	**6**	1	4	11	19	85	8	112	260
01:45 PM	**16**	0	9	25	**6**	87	13	106	6	**8**	6	20	**24**	**98**	**11**	**133**	**284**
Total Volume	45	3	59	107	12	334	78	424	15	22	30	67	78	327	24	429	1027
% App. Total	42.1	2.8	55.1		2.8	78.8	18.4		22.4	32.8	44.8		18.2	76.2	5.6		
PHF	.703	.375	.819	.892	.500	.949	.813	.991	.625	.688	.500	.761	.813	.834	.545	.806	.904

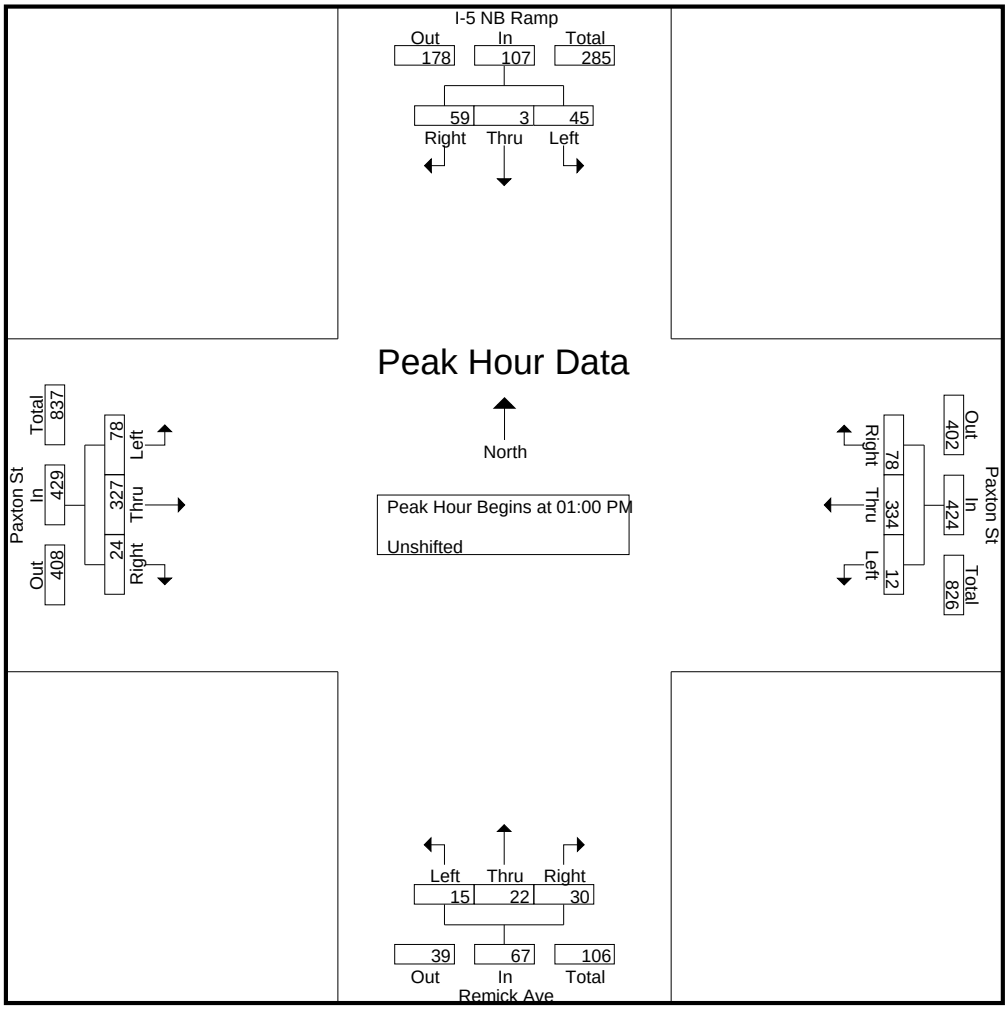

CITY TRAFFIC COUNTERS

626.991.7522

www.ctcounters.com

File Name : 5NBPaxton
Site Code : 00000000
Start Date : 1/14/2014
Page No : 4

	I-5 NB Ramp Southbound				Paxton St Westbound				Remick Ave Northbound				Paxton St Eastbound				
Start Time	Left	Thru	Right	App. Total	Left	Thru	Right	App. Total	Left	Thru	Right	App. Total	Left	Thru	Right	App. Total	Int. Total
Peak Hour Analysis From 02:00 PM to 05:45 PM - Peak 1 of 1																	
Peak Hour for Entire Intersection Begins at 04:30 PM																	
04:30 PM	**20**	**2**	7	29	4	**117**	42	163	2	**3**	10	**15**	52	**146**	**11**	**209**	**416**
04:45 PM	11	2	10	23	2	114	46	162	**4**	2	9	15	**57**	131	3	191	391
05:00 PM	9	0	**19**	28	3	117	43	163	0	1	**14**	15	46	145	4	195	401
05:15 PM	17	0	18	**35**	**5**	112	**53**	**170**	0	2	9	11	54	140	2	196	412
Total Volume	57	4	54	115	14	460	184	658	6	8	42	56	209	562	20	791	1620
% App. Total	49.6	3.5	47		2.1	69.9	28		10.7	14.3	75		26.4	71	2.5		
PHF	.713	.500	.711	.821	.700	.983	.868	.968	.375	.667	.750	.933	.917	.962	.455	.946	.974

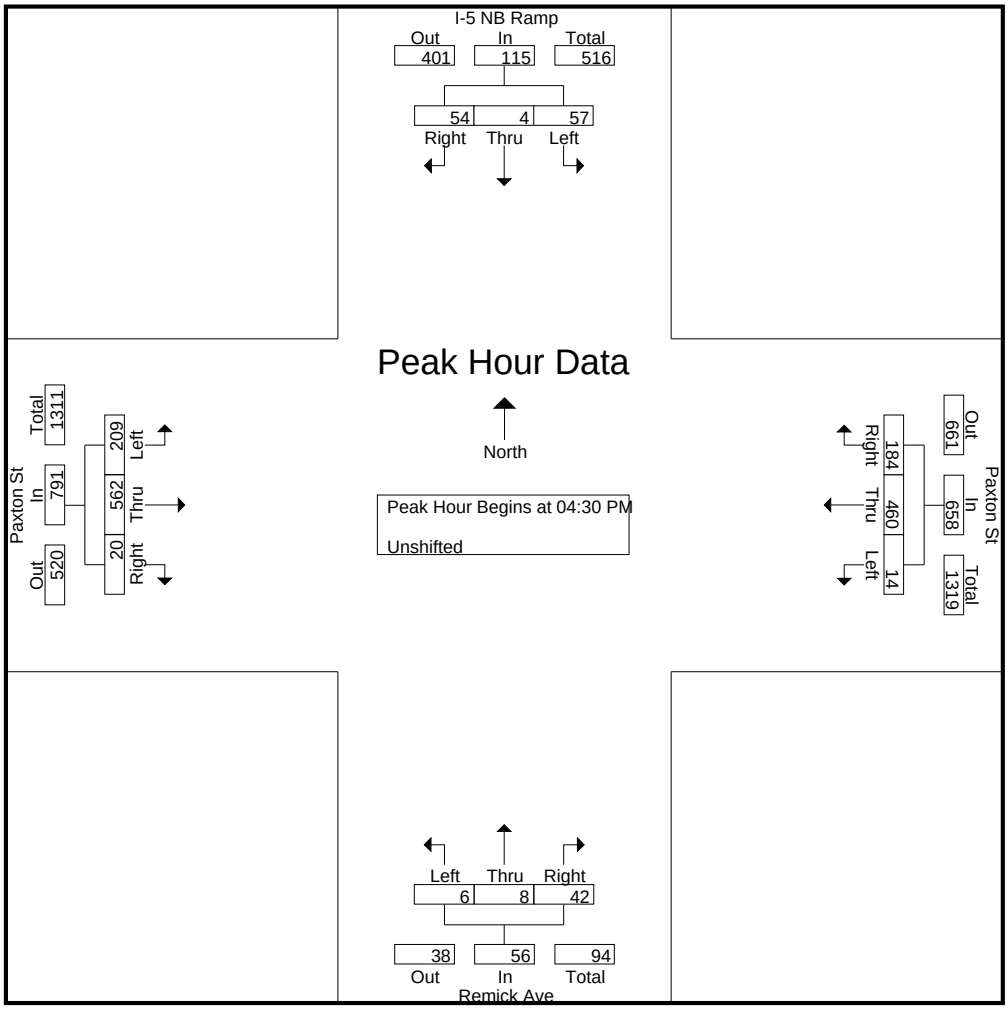

CITY TRAFFIC COUNTERS

626.991.7522

www.ctcounters.com

File Name : 5NBPaxton_MC
Site Code : 00000000
Start Date : 1/14/2014
Page No : 1

Groups Printed- Bank 2

	I-5 NB Ramp Southbound			Paxton St Westbound			Remick Ave Northbound			Paxton St Eastbound			
Start Time	Left	Thru	Right	Left	Thru	Right	Left	Thru	Right	Left	Thru	Right	Int. Total
07:00 AM	0	0	0	0	1	0	0	0	0	0	0	0	1
Total	0	0	0	0	1	0	0	0	0	0	0	0	1
09:00 AM	0	0	0	0	1	0	0	0	0	0	0	0	1
09:30 AM	0	0	0	0	1	1	0	0	0	1	0	0	3
Total	0	0	0	0	2	1	0	0	0	1	0	0	4
12:00 PM	0	0	0	0	0	0	0	0	1	0	0	0	1
12:15 PM	0	0	0	0	1	0	0	0	0	0	0	0	1
12:30 PM	0	0	0	0	0	0	0	0	0	0	1	0	1
Total	0	0	0	0	1	0	0	0	1	0	1	0	3
03:30 PM	0	0	0	0	1	0	0	0	0	0	0	0	1
Total	0	0	0	0	1	0	0	0	0	0	0	0	1
04:00 PM	0	0	0	0	0	0	0	0	0	0	1	0	1
04:15 PM	0	0	0	0	0	0	0	0	0	1	0	0	1
04:30 PM	1	0	0	0	0	0	0	0	0	0	0	0	1
04:45 PM	0	0	0	0	0	0	0	0	0	0	1	0	1
Total	1	0	0	0	0	0	0	0	0	1	2	0	4
05:15 PM	0	0	0	0	1	0	0	0	0	0	0	0	1
05:30 PM	0	0	0	0	1	0	0	0	0	0	0	0	1
05:45 PM	0	0	0	0	1	1	0	0	0	0	0	0	2
Total	0	0	0	0	3	1	0	0	0	0	0	0	4
Grand Total	1	0	0	0	8	2	0	0	1	2	3	0	17
Apprch %	100	0	0	0	80	20	0	0	100	40	60	0	
Total %	5.9	0	0	0	47.1	11.8	0	0	5.9	11.8	17.6	0	

CITY TRAFFIC COUNTERS

626.991.7522

www.ctcounters.com

File Name : 5NBPaxton_MC
Site Code : 00000000
Start Date : 1/14/2014
Page No : 2

	I-5 NB Ramp Southbound				Paxton St Westbound				Remick Ave Northbound				Paxton St Eastbound				
Start Time	Left	Thru	Right	App. Total	Left	Thru	Right	App. Total	Left	Thru	Right	App. Total	Left	Thru	Right	App. Total	Int. Total
Peak Hour Analysis From 07:00 AM to 09:45 AM - Peak 1 of 1																	
Peak Hour for Entire Intersection Begins at 08:45 AM																	
08:45 AM	0	0	0	0	0	0	0	0	0	0	0	0	0	0	0	0	0
09:00 AM	0	0	0	0	0	**1**	0	1	0	0	0	0	0	0	0	0	1
09:15 AM	0	0	0	0	0	0	0	0	0	0	0	0	0	0	0	0	0
09:30 AM	0	0	0	0	0	1	**1**	**2**	0	0	0	0	**1**	0	0	**1**	**3**
Total Volume	0	0	0	0	0	2	1	3	0	0	0	0	1	0	0	1	4
% App. Total	0	0	0		0	66.7	33.3		0	0	0		100	0	0		
PHF	.000	.000	.000	.000	.000	.500	.250	.375	.000	.000	.000	.000	.250	.000	.000	.250	.333

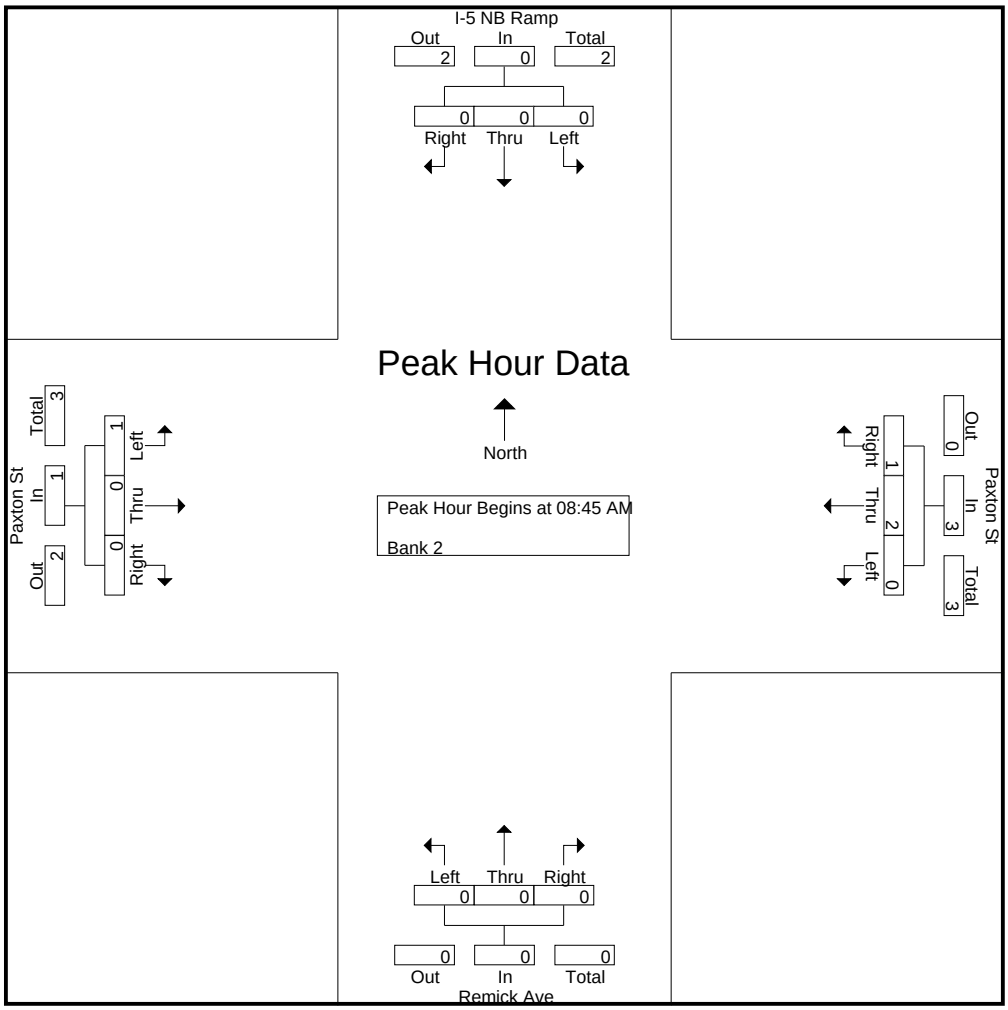

CITY TRAFFIC COUNTERS

626.991.7522

www.ctcounters.com

File Name : 5NBPaxton_MC
Site Code : 00000000
Start Date : 1/14/2014
Page No : 3

	I-5 NB Ramp Southbound				Paxton St Westbound				Remick Ave Northbound				Paxton St Eastbound				
Start Time	Left	Thru	Right	App. Total	Left	Thru	Right	App. Total	Left	Thru	Right	App. Total	Left	Thru	Right	App. Total	Int. Total
Peak Hour Analysis From 10:00 AM to 01:45 PM - Peak 1 of 1																	
Peak Hour for Entire Intersection Begins at 11:45 AM																	
11:45 AM	0	0	0	0	0	0	0	0	0	0	0	0	0	0	0	0	0
12:00 PM	0	0	0	0	0	0	0	0	0	0	**1**	**1**	0	0	0	0	**1**
12:15 PM	0	0	0	0	0	**1**	0	**1**	0	0	0	0	0	0	0	0	1
12:30 PM	0	0	0	0	0	0	0	0	0	0	0	0	0	**1**	0	**1**	1
Total Volume	0	0	0	0	0	1	0	1	0	0	1	1	0	1	0	1	3
% App. Total	0	0	0		0	100	0		0	0	100		0	100	0		
PHF	.000	.000	.000	.000	.000	.250	.000	.250	.000	.000	.250	.250	.000	.250	.000	.250	.750

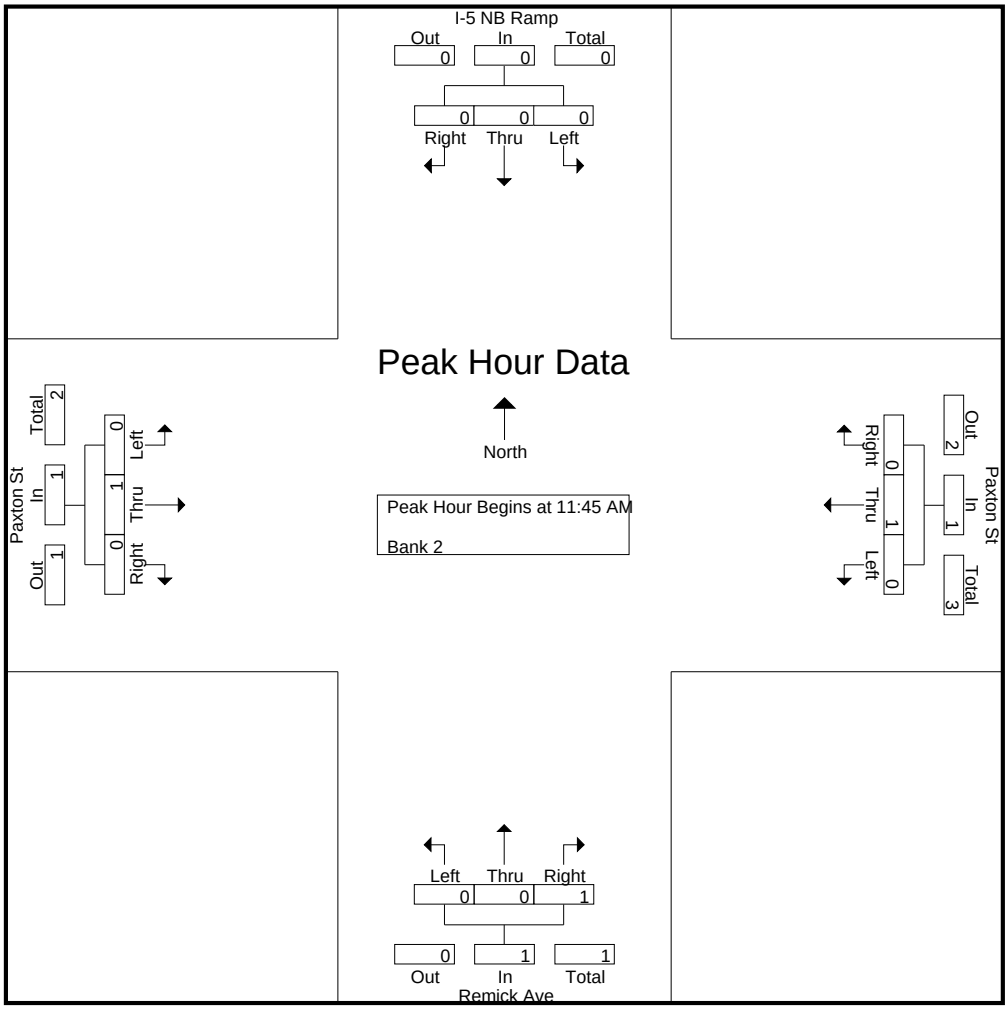

CITY TRAFFIC COUNTERS

626.991.7522

www.ctcounters.com

File Name : 5NBPaxton_MC
Site Code : 00000000
Start Date : 1/14/2014
Page No : 4

	I-5 NB Ramp Southbound				Paxton St Westbound				Remick Ave Northbound				Paxton St Eastbound				
Start Time	Left	Thru	Right	App. Total	Left	Thru	Right	App. Total	Left	Thru	Right	App. Total	Left	Thru	Right	App. Total	Int. Total
Peak Hour Analysis From 02:00 PM to 05:45 PM - Peak 1 of 1																	
Peak Hour for Entire Intersection Begins at 04:00 PM																	
04:00 PM	0	0	0	0	0	0	0	0	0	0	0	0	0	**1**	0	**1**	**1**
04:15 PM	0	0	0	0	0	0	0	0	0	0	0	0	**1**	0	0	1	1
04:30 PM	**1**	0	0	**1**	0	0	0	0	0	0	0	0	0	0	0	0	1
04:45 PM	0	0	0	0	0	0	0	0	0	0	0	0	0	1	0	1	1
Total Volume	1	0	0	1	0	0	0	0	0	0	0	0	1	2	0	3	4
% App. Total	100	0	0		0	0	0		0	0	0		33.3	66.7	0		
PHF	.250	.000	.000	.250	.000	.000	.000	.000	.000	.000	.000	.000	.250	.500	.000	.750	1.00

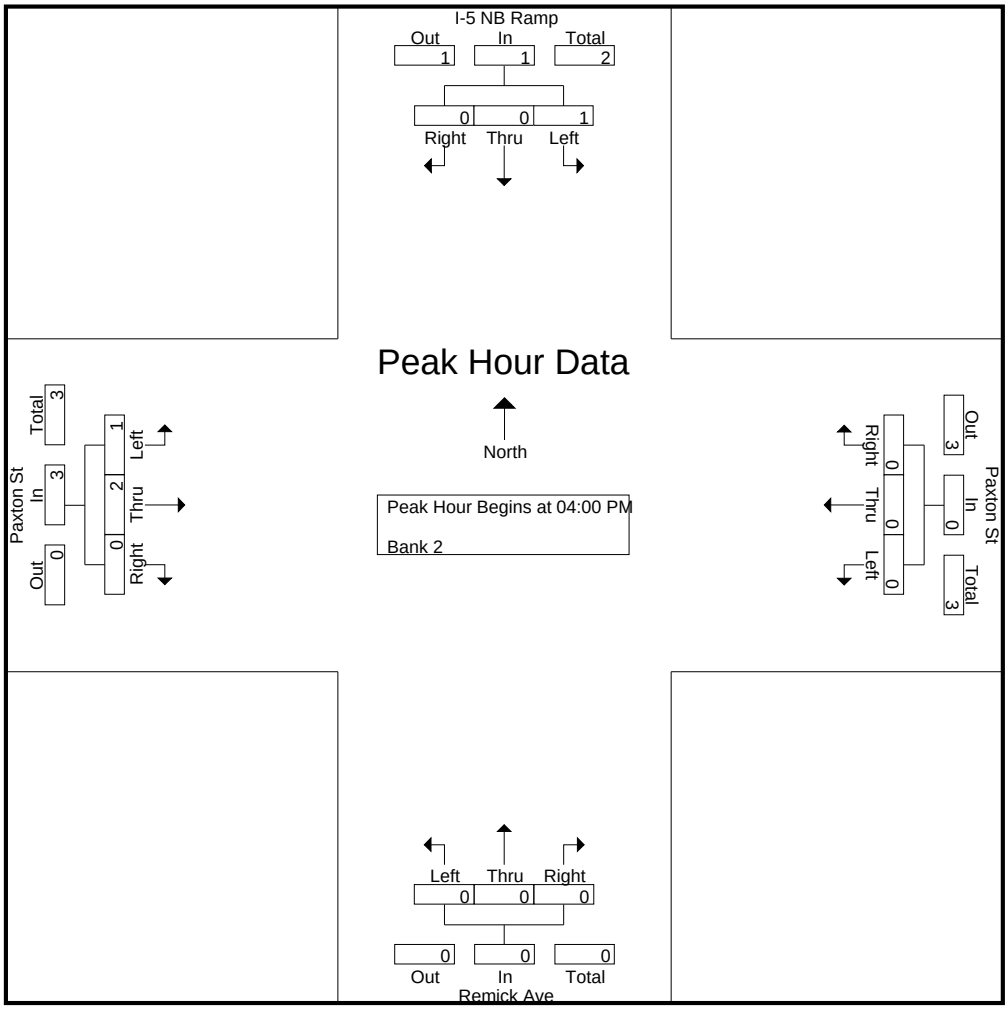

CITY TRAFFIC COUNTERS

626.991.7522

www.ctcounters.com

File Name : 5NBPaxton_Bus
Site Code : 00000000
Start Date : 1/14/2014
Page No : 1

Groups Printed- Bank 1

	I-5 NB Ramp Southbound			Paxton St Westbound			Remick Ave Northbound			Paxton St Eastbound			
Start Time	Left	Thru	Right	Left	Thru	Right	Left	Thru	Right	Left	Thru	Right	Int. Total
07:00 AM	0	0	0	0	2	0	0	0	0	0	1	0	3
07:15 AM	0	0	0	1	0	0	0	0	0	0	1	0	2
07:30 AM	0	0	0	0	2	0	0	0	0	0	0	0	2
07:45 AM	0	0	0	0	0	1	0	0	0	0	0	0	1
Total	0	0	0	1	4	1	0	0	0	0	2	0	8
08:00 AM	0	0	0	0	2	0	0	0	0	0	1	0	3
08:15 AM	1	0	0	0	0	0	0	0	0	0	0	0	1
08:30 AM	0	0	1	0	1	0	0	0	0	0	1	0	3
08:45 AM	0	0	0	0	0	0	0	0	0	0	3	0	3
Total	1	0	1	0	3	0	0	0	0	0	5	0	10
09:00 AM	0	0	0	0	0	0	0	0	0	0	4	0	4
09:15 AM	0	0	0	0	0	1	0	0	0	0	5	0	6
09:45 AM	0	0	0	0	0	0	0	0	0	0	1	0	1
Total	0	0	0	0	0	1	0	0	0	0	10	0	11
12:15 PM	0	0	0	0	2	0	0	0	0	0	1	0	3
12:30 PM	0	0	0	0	1	0	0	0	0	0	0	0	1
12:45 PM	0	0	0	0	0	0	0	0	0	0	1	0	1
Total	0	0	0	0	3	0	0	0	0	0	2	0	5
01:00 PM	0	0	0	0	1	0	0	0	0	0	0	0	1
01:15 PM	0	0	0	0	1	0	0	0	0	0	0	0	1
01:30 PM	0	0	0	0	2	0	0	0	0	0	0	0	2
01:45 PM	0	0	0	0	2	0	0	0	0	1	1	0	4
Total	0	0	0	0	6	0	0	0	0	1	1	0	8
03:00 PM	0	0	0	0	2	0	0	0	0	0	3	0	5
03:15 PM	0	0	0	0	1	0	0	0	0	0	4	0	5
03:30 PM	0	0	0	0	0	0	0	0	0	0	4	0	4
03:45 PM	0	0	0	0	0	1	0	0	0	0	2	0	3
Total	0	0	0	0	3	1	0	0	0	0	13	0	17
04:00 PM	0	0	0	0	0	1	0	0	0	0	2	0	3
04:15 PM	0	0	0	0	0	0	0	0	0	1	2	0	3
04:30 PM	0	0	0	0	0	0	0	0	0	0	2	0	2
Total	0	0	0	0	0	1	0	0	0	1	6	0	8
05:00 PM	0	0	0	0	0	0	0	0	0	0	1	1	2
05:15 PM	0	0	0	0	1	0	0	0	0	0	2	0	3
05:30 PM	0	0	0	0	0	0	0	0	0	1	0	0	1
Total	0	0	0	0	1	0	0	0	0	1	3	1	6
Grand Total	1	0	1	1	20	4	0	0	0	3	42	1	73
Apprch %	50	0	50	4	80	16	0	0	0	6.5	91.3	2.2	
Total %	1.4	0	1.4	1.4	27.4	5.5	0	0	0	4.1	57.5	1.4	

CITY TRAFFIC COUNTERS

626.991.7522

www.ctcounters.com

File Name : 5NBPaxton_Bus
Site Code : 00000000
Start Date : 1/14/2014
Page No : 2

	I-5 NB Ramp Southbound				Paxton St Westbound				Remick Ave Northbound				Paxton St Eastbound				
Start Time	Left	Thru	Right	App. Total	Left	Thru	Right	App. Total	Left	Thru	Right	App. Total	Left	Thru	Right	App. Total	Int. Total
Peak Hour Analysis From 07:00 AM to 09:45 AM - Peak 1 of 1																	
Peak Hour for Entire Intersection Begins at 08:30 AM																	
08:30 AM	0	0	**1**	**1**	0	**1**	0	**1**	0	0	0	0	0	1	0	1	3
08:45 AM	0	0	0	0	0	0	0	0	0	0	0	0	0	3	0	3	3
09:00 AM	0	0	0	0	0	0	0	0	0	0	0	0	0	4	0	4	4
09:15 AM	0	0	0	0	0	0	**1**	1	0	0	0	0	0	**5**	0	**5**	**6**
Total Volume	0	0	1	1	0	1	1	2	0	0	0	0	0	13	0	13	16
% App. Total	0	0	100		0	50	50		0	0	0		0	100	0		
PHF	.000	.000	.250	.250	.000	.250	.250	.500	.000	.000	.000	.000	.000	.650	.000	.650	.667

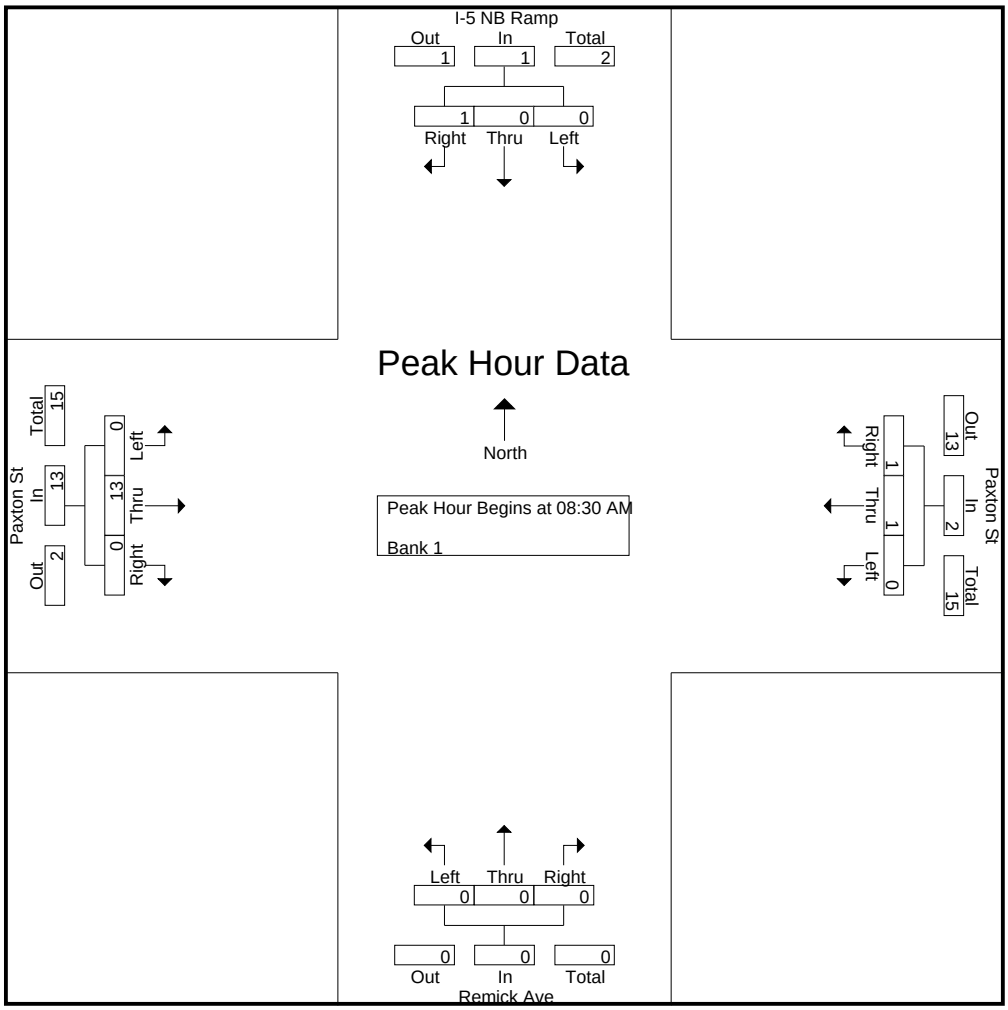

CITY TRAFFIC COUNTERS

626.991.7522

www.ctcounters.com

File Name : 5NBPaxton_Bus
Site Code : 00000000
Start Date : 1/14/2014
Page No : 3

	I-5 NB Ramp Southbound				Paxton St Westbound				Remick Ave Northbound				Paxton St Eastbound				
Start Time	Left	Thru	Right	App. Total	Left	Thru	Right	App. Total	Left	Thru	Right	App. Total	Left	Thru	Right	App. Total	Int. Total
Peak Hour Analysis From 10:00 AM to 01:45 PM - Peak 1 of 1																	
Peak Hour for Entire Intersection Begins at 01:00 PM																	
01:00 PM	0	0	0	0	0	1	0	1	0	0	0	0	0	0	0	0	1
01:15 PM	0	0	0	0	0	1	0	1	0	0	0	0	0	0	0	0	1
01:30 PM	0	0	0	0	0	**2**	0	**2**	0	0	0	0	0	0	0	0	2
01:45 PM	0	0	0	0	0	2	0	2	0	0	0	0	**1**	**1**	0	**2**	**4**
Total Volume	0	0	0	0	0	6	0	6	0	0	0	0	1	1	0	2	8
% App. Total	0	0	0		0	100	0		0	0	0		50	50	0		
PHF	.000	.000	.000	.000	.000	.750	.000	.750	.000	.000	.000	.000	.250	.250	.000	.250	.500

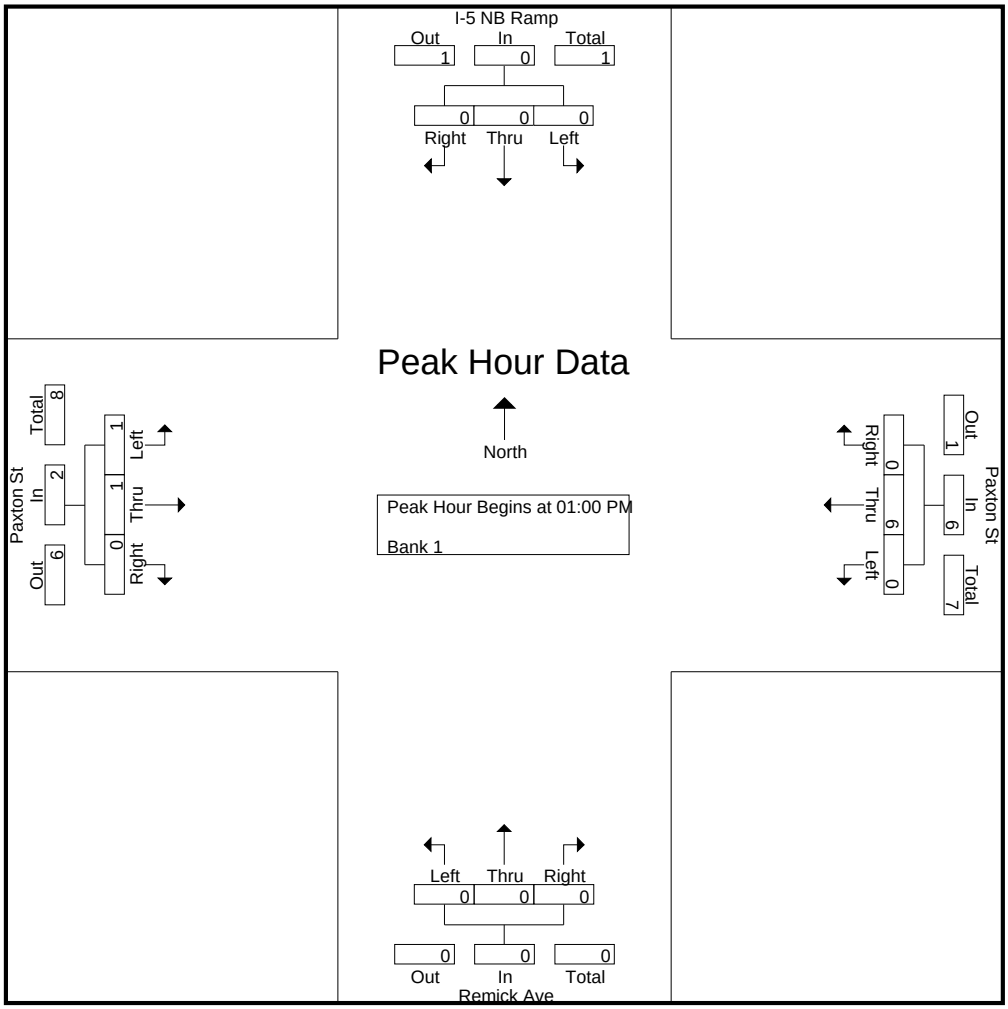

CITY TRAFFIC COUNTERS

626.991.7522

www.ctcounters.com

File Name : 5NBPaxton_Bus
Site Code : 00000000
Start Date : 1/14/2014
Page No : 4

	I-5 NB Ramp Southbound				Paxton St Westbound				Remick Ave Northbound				Paxton St Eastbound				
Start Time	Left	Thru	Right	App. Total	Left	Thru	Right	App. Total	Left	Thru	Right	App. Total	Left	Thru	Right	App. Total	Int. Total
Peak Hour Analysis From 02:00 PM to 05:45 PM - Peak 1 of 1																	
Peak Hour for Entire Intersection Begins at 03:00 PM																	
03:00 PM	0	0	0	0	0	**2**	0	**2**	0	0	0	0	0	3	0	3	**5**
03:15 PM	0	0	0	0	0	1	0	1	0	0	0	0	0	**4**	0	**4**	5
03:30 PM	0	0	0	0	0	0	0	0	0	0	0	0	0	4	0	4	4
03:45 PM	0	0	0	0	0	0	**1**	1	0	0	0	0	0	2	0	2	3
Total Volume	0	0	0	0	0	3	1	4	0	0	0	0	0	13	0	13	17
% App. Total	0	0	0		0	75	25		0	0	0		0	100	0		
PHF	.000	.000	.000	.000	.000	.375	.250	.500	.000	.000	.000	.000	.000	.813	.000	.813	.850

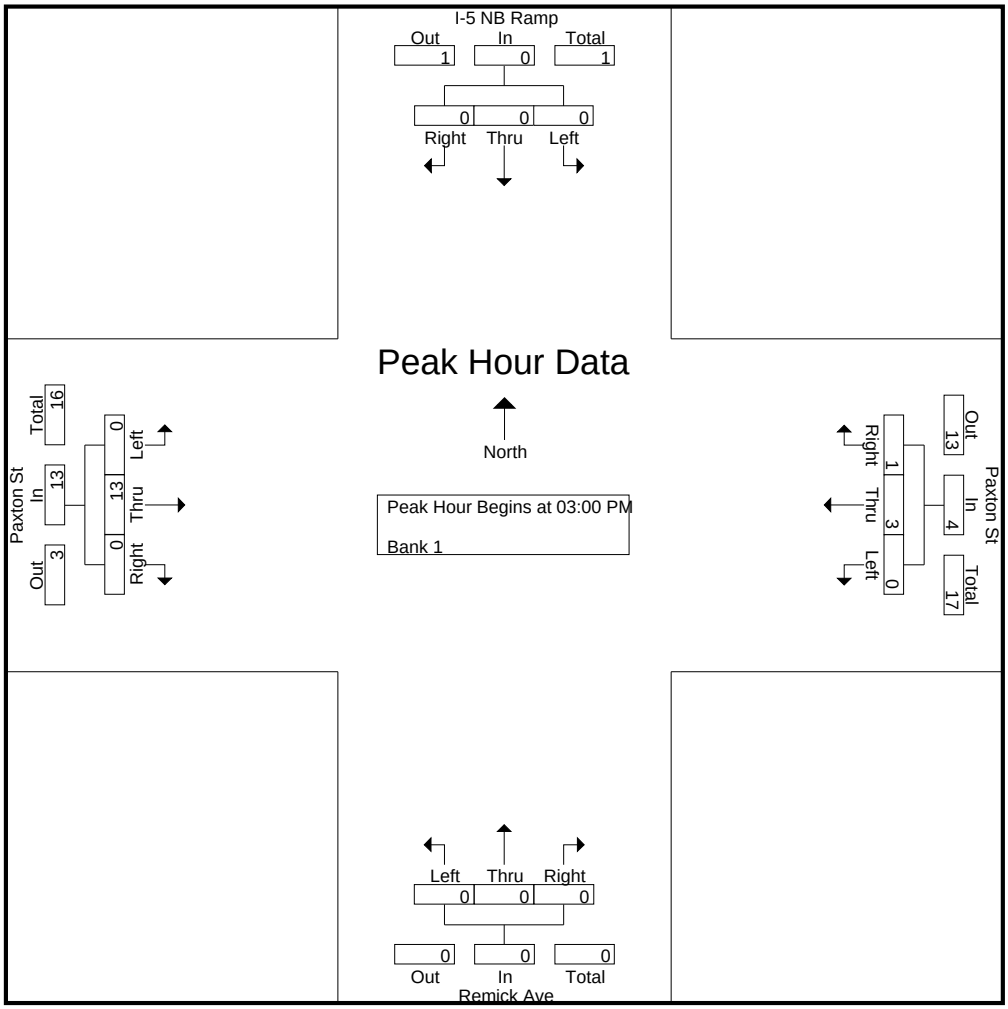

CITY TRAFFIC COUNTERS

626.991.7522

www.ctcounters.com

File Name : 5NBPaxton_2Axle
Site Code : 00000000
Start Date : 1/14/2014
Page No : 1

Groups Printed- Unshifted

	I-5 NB Ramp Southbound			Paxton St Westbound			Remick Ave Northbound			Paxton St Eastbound			
Start Time	Left	Thru	Right	Left	Thru	Right	Left	Thru	Right	Left	Thru	Right	Int. Total
07:00 AM	0	0	0	0	0	4	0	0	0	0	2	0	6
07:15 AM	0	0	0	0	0	1	0	0	2	1	1	0	5
07:30 AM	0	0	1	0	0	1	0	1	0	0	0	1	4
07:45 AM	0	0	0	0	1	0	0	0	0	0	1	0	2
Total	0	0	1	0	1	6	0	1	2	1	4	1	17
08:00 AM	0	0	0	0	1	0	0	0	1	0	2	0	4
08:15 AM	0	0	0	0	4	4	0	0	2	0	1	1	12
08:30 AM	1	0	0	0	0	1	0	0	0	0	1	0	3
08:45 AM	0	0	0	0	1	0	0	0	0	0	0	0	1
Total	1	0	0	0	6	5	0	0	3	0	4	1	20
09:00 AM	1	0	1	1	1	1	0	1	1	1	1	0	9
09:15 AM	1	0	0	0	2	2	0	0	0	1	2	0	8
09:30 AM	1	0	0	1	2	0	0	0	1	1	0	0	6
09:45 AM	0	0	0	0	1	0	0	0	0	0	2	0	3
Total	3	0	1	2	6	3	0	1	2	3	5	0	26
12:00 PM	1	0	0	0	1	2	0	0	0	0	0	0	4
12:15 PM	1	0	1	0	1	2	0	0	0	1	1	0	7
12:30 PM	0	0	0	0	1	3	0	0	0	1	2	0	7
12:45 PM	1	0	0	0	1	1	0	0	0	0	1	0	4
Total	3	0	1	0	4	8	0	0	0	2	4	0	22
01:00 PM	1	0	2	0	1	0	0	0	1	0	1	0	6
01:15 PM	0	0	0	0	1	0	0	0	1	1	2	0	5
01:30 PM	0	0	0	0	2	0	0	0	0	1	1	0	4
01:45 PM	0	0	0	0	1	0	0	0	0	1	1	0	3
Total	1	0	2	0	5	0	0	0	2	3	5	0	18
03:00 PM	1	0	0	0	2	1	0	0	0	0	3	0	7
03:15 PM	1	0	1	0	1	2	0	0	0	1	1	0	7
03:30 PM	3	1	0	0	2	0	0	0	0	1	2	0	9
03:45 PM	0	0	0	0	1	0	0	0	0	1	2	0	4
Total	5	1	1	0	6	3	0	0	0	3	8	0	27
04:00 PM	1	0	0	0	1	0	0	0	0	0	1	0	3
04:15 PM	0	0	0	0	1	1	0	0	0	0	2	0	4
04:30 PM	0	0	0	0	0	0	0	0	0	1	1	0	2
04:45 PM	1	0	0	0	1	1	0	0	0	0	0	0	3
Total	2	0	0	0	3	2	0	0	0	1	4	0	12
05:00 PM	1	0	0	0	1	1	0	0	0	2	2	0	7
05:15 PM	0	0	0	0	0	0	0	0	1	1	1	0	3
05:30 PM	1	0	0	0	0	0	0	0	0	0	0	0	1
05:45 PM	0	0	1	0	1	0	0	0	0	1	1	0	4
Total	2	0	1	0	2	1	0	0	1	4	4	0	15
Grand Total	17	1	7	2	33	28	0	2	10	17	38	2	157
Apprch %	68	4	28	3.2	52.4	44.4	0	16.7	83.3	29.8	66.7	3.5	
Total %	10.8	0.6	4.5	1.3	21	17.8	0	1.3	6.4	10.8	24.2	1.3	

CITY TRAFFIC COUNTERS

626.991.7522

www.ctcounters.com

File Name : 5NBPaxton_2Axle
Site Code : 00000000
Start Date : 1/14/2014
Page No : 2

	I-5 NB Ramp Southbound				Paxton St Westbound				Remick Ave Northbound				Paxton St Eastbound				
Start Time	Left	Thru	Right	App. Total	Left	Thru	Right	App. Total	Left	Thru	Right	App. Total	Left	Thru	Right	App. Total	Int. Total
Peak Hour Analysis From 07:00 AM to 09:45 AM - Peak 1 of 1																	
Peak Hour for Entire Intersection Begins at 09:00 AM																	
09:00 AM	**1**	0	**1**	**2**	**1**	1	1	3	0	**1**	**1**	**2**	**1**	1	0	2	**9**
09:15 AM	1	0	0	1	0	**2**	**2**	**4**	0	0	0	0	1	**2**	0	**3**	8
09:30 AM	1	0	0	1	1	2	0	3	0	0	1	1	1	0	0	1	6
09:45 AM	0	0	0	0	0	1	0	1	0	0	0	0	0	2	0	2	3
Total Volume	3	0	1	4	2	6	3	11	0	1	2	3	3	5	0	8	26
% App. Total	75	0	25		18.2	54.5	27.3		0	33.3	66.7		37.5	62.5	0		
PHF	.750	.000	.250	.500	.500	.750	.375	.688	.000	.250	.500	.375	.750	.625	.000	.667	.722

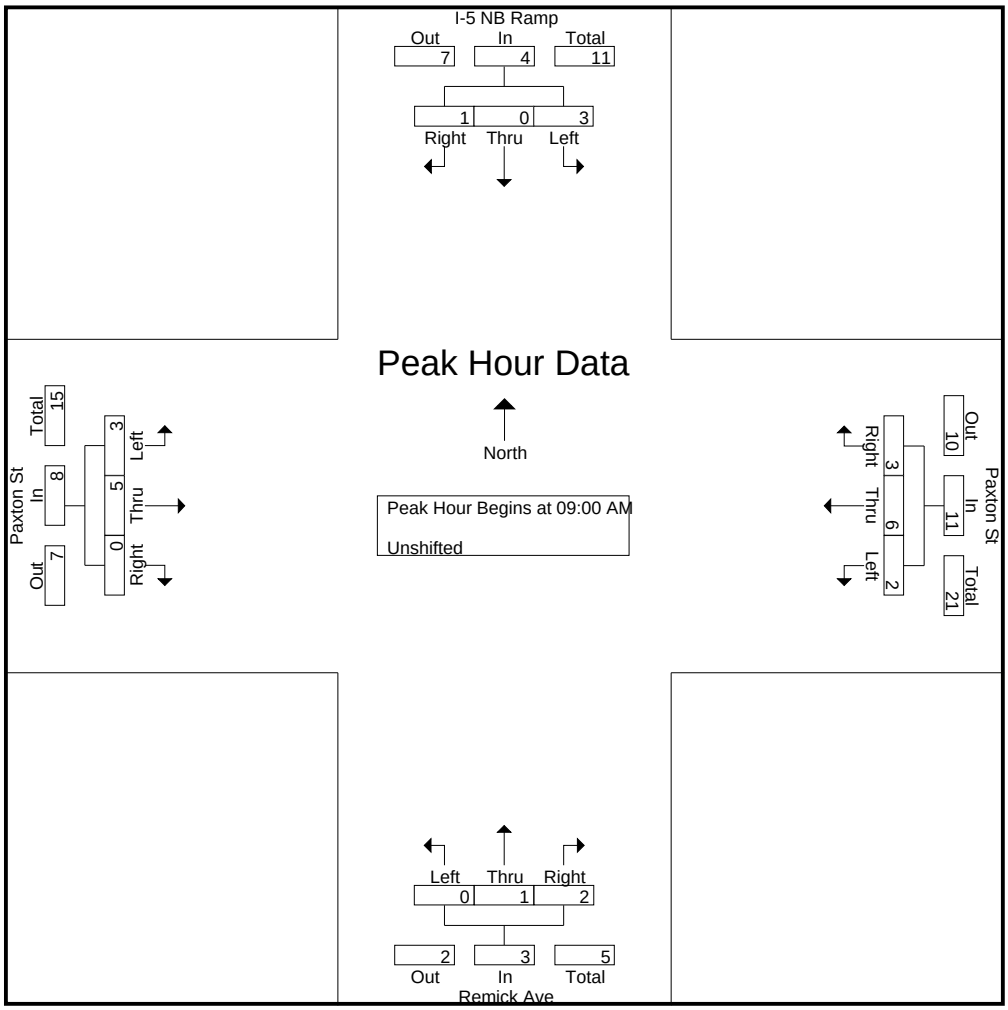

CITY TRAFFIC COUNTERS

626.991.7522

www.ctcounters.com

File Name : 5NBPaxton_2Axle
Site Code : 00000000
Start Date : 1/14/2014
Page No : 3

	I-5 NB Ramp Southbound				Paxton St Westbound				Remick Ave Northbound				Paxton St Eastbound				
Start Time	Left	Thru	Right	App. Total	Left	Thru	Right	App. Total	Left	Thru	Right	App. Total	Left	Thru	Right	App. Total	Int. Total
Peak Hour Analysis From 10:00 AM to 01:45 PM - Peak 1 of 1																	
Peak Hour for Entire Intersection Begins at 12:15 PM																	
12:15 PM	**1**	0	1	2	0	**1**	2	3	0	0	0	0	**1**	1	0	2	**7**
12:30 PM	0	0	0	0	0	1	**3**	**4**	0	0	0	0	1	**2**	0	**3**	7
12:45 PM	1	0	0	1	0	1	1	2	0	0	0	0	0	1	0	1	4
01:00 PM	1	0	**2**	**3**	0	1	0	1	0	0	**1**	**1**	0	1	0	1	6
Total Volume	3	0	3	6	0	4	6	10	0	0	1	1	2	5	0	7	24
% App. Total	50	0	50		0	40	60		0	0	100		28.6	71.4	0		
PHF	.750	.000	.375	.500	.000	1.00	.500	.625	.000	.000	.250	.250	.500	.625	.000	.583	.857

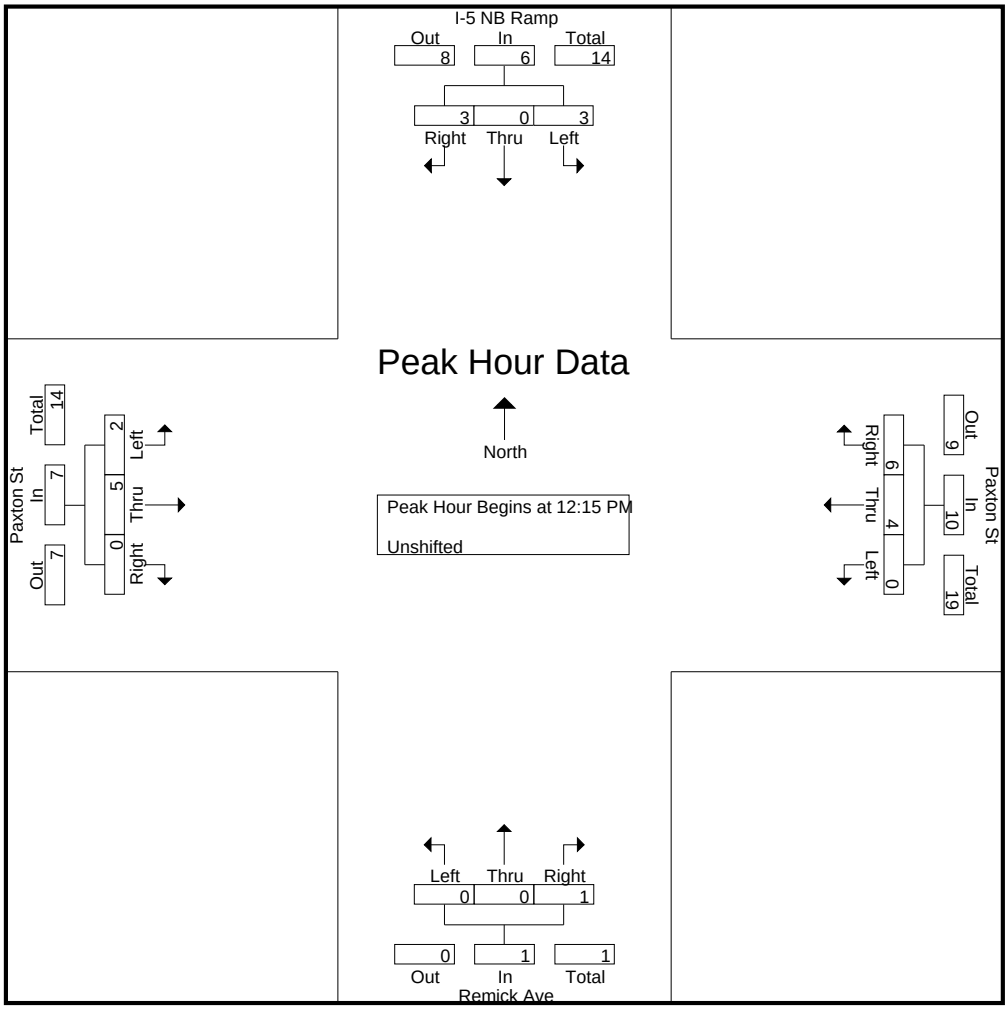

CITY TRAFFIC COUNTERS

626.991.7522

www.ctcounters.com

File Name : 5NBPaxton_2Axle
Site Code : 00000000
Start Date : 1/14/2014
Page No : 4

	I-5 NB Ramp Southbound				Paxton St Westbound				Remick Ave Northbound				Paxton St Eastbound				
Start Time	Left	Thru	Right	App. Total	Left	Thru	Right	App. Total	Left	Thru	Right	App. Total	Left	Thru	Right	App. Total	Int. Total
Peak Hour Analysis From 02:00 PM to 05:45 PM - Peak 1 of 1																	
Peak Hour for Entire Intersection Begins at 03:00 PM																	
03:00 PM	1	0	0	1	0	**2**	1	**3**	0	0	0	0	0	**3**	0	**3**	7
03:15 PM	1	0	**1**	2	0	1	**2**	3	0	0	0	0	**1**	1	0	2	7
03:30 PM	**3**	**1**	0	**4**	0	2	0	2	0	0	0	0	1	2	0	3	**9**
03:45 PM	0	0	0	0	0	1	0	1	0	0	0	0	1	2	0	3	4
Total Volume	5	1	1	7	0	6	3	9	0	0	0	0	3	8	0	11	27
% App. Total	71.4	14.3	14.3		0	66.7	33.3		0	0	0		27.3	72.7	0		
PHF	.417	.250	.250	.438	.000	.750	.375	.750	.000	.000	.000	.000	.750	.667	.000	.917	.750

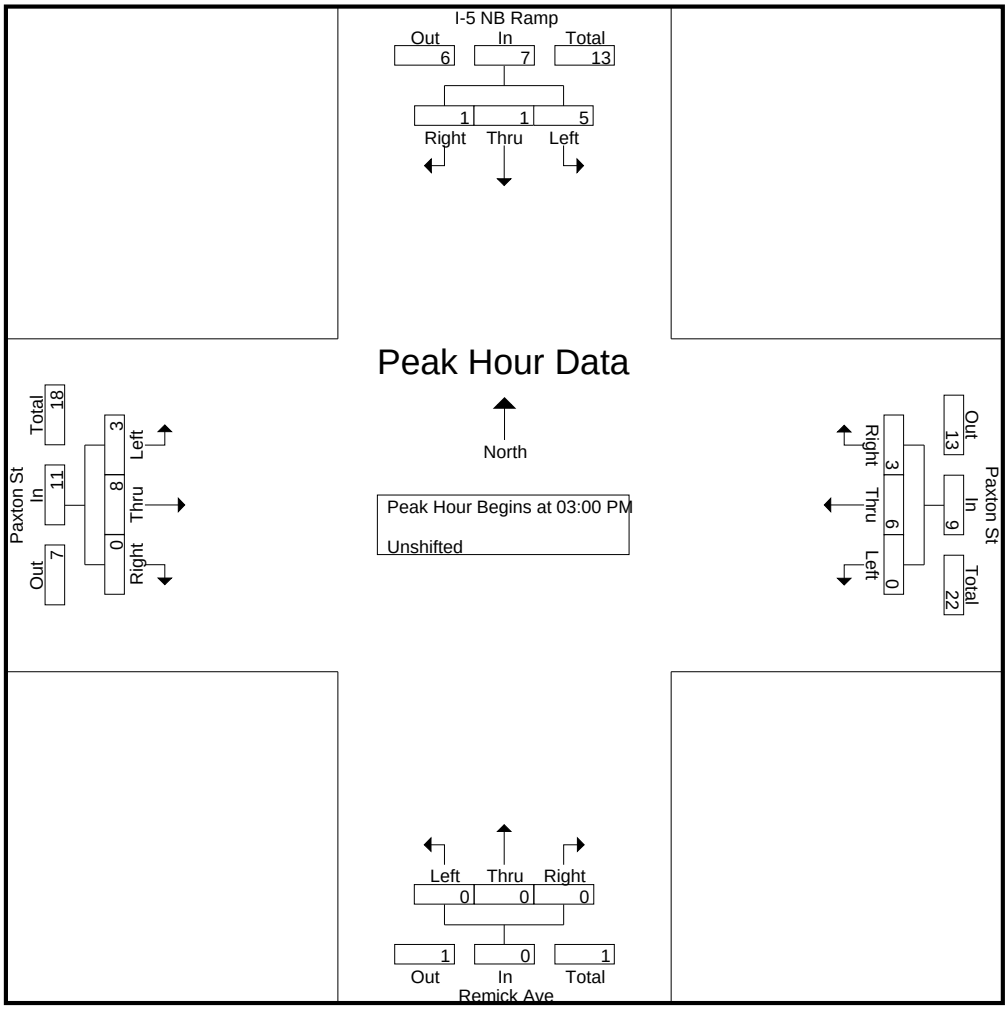

CITY TRAFFIC COUNTERS

626.991.7522

www.ctcounters.com

File Name : 5NBPaxton_3Axle
Site Code : 00000000
Start Date : 1/14/2014
Page No : 1

Groups Printed- Bank 1

	I-5 NB Ramp Southbound			Paxton St Westbound			Remick Ave Northbound			Paxton St Eastbound			
Start Time	Left	Thru	Right	Left	Thru	Right	Left	Thru	Right	Left	Thru	Right	Int. Total
07:15 AM	0	0	0	0	1	0	0	0	0	1	1	0	3
07:30 AM	0	0	0	0	0	0	0	0	0	0	1	0	1
07:45 AM	1	0	0	0	1	0	0	0	0	0	0	0	2
Total	1	0	0	0	2	0	0	0	0	1	2	0	6
08:00 AM	0	0	1	0	4	0	0	0	0	0	0	0	5
08:30 AM	1	0	0	0	0	0	0	0	0	0	0	0	1
08:45 AM	0	0	0	0	1	0	0	0	0	0	1	0	2
Total	1	0	1	0	5	0	0	0	0	0	1	0	8
12:15 PM	0	0	0	0	0	0	0	1	0	0	0	0	1
12:45 PM	0	0	1	0	1	0	0	0	0	0	0	0	2
Total	0	0	1	0	1	0	0	1	0	0	0	0	3
01:15 PM	1	0	0	0	0	0	0	0	0	0	0	0	1
01:30 PM	0	0	0	0	1	0	0	0	0	0	0	0	1
Total	1	0	0	0	1	0	0	0	0	0	0	0	2
03:00 PM	0	0	0	0	0	1	0	0	0	0	0	0	1
03:15 PM	0	0	0	0	0	0	0	0	0	0	1	0	1
03:30 PM	0	0	0	0	0	0	0	0	0	0	1	0	1
03:45 PM	0	0	0	0	0	0	0	0	0	1	1	0	2
Total	0	0	0	0	0	1	0	0	0	1	3	0	5
04:15 PM	0	0	0	0	0	0	0	0	0	0	1	0	1
Total	0	0	0	0	0	0	0	0	0	0	1	0	1
Grand Total	3	0	2	0	9	1	0	1	0	2	7	0	25
Apprch %	60	0	40	0	90	10	0	100	0	22.2	77.8	0	
Total %	12	0	8	0	36	4	0	4	0	8	28	0	

CITY TRAFFIC COUNTERS

626.991.7522

www.ctcounters.com

File Name : 5NBPaxton_3Axle
Site Code : 00000000
Start Date : 1/14/2014
Page No : 2

	I-5 NB Ramp Southbound				Paxton St Westbound				Remick Ave Northbound				Paxton St Eastbound				
Start Time	Left	Thru	Right	App. Total	Left	Thru	Right	App. Total	Left	Thru	Right	App. Total	Left	Thru	Right	App. Total	Int. Total
Peak Hour Analysis From 07:00 AM to 11:45 AM - Peak 1 of 1																	
Peak Hour for Entire Intersection Begins at 07:15 AM																	
07:15 AM	0	0	0	0	0	1	0	1	0	0	0	0	**1**	**1**	0	**2**	3
07:30 AM	0	0	0	0	0	0	0	0	0	0	0	0	0	1	0	1	1
07:45 AM	**1**	0	0	**1**	0	1	0	1	0	0	0	0	0	0	0	0	2
08:00 AM	0	0	**1**	1	0	**4**	0	**4**	0	0	0	0	0	0	0	0	**5**
Total Volume	1	0	1	2	0	6	0	6	0	0	0	0	1	2	0	3	11
% App. Total	50	0	50		0	100	0		0	0	0		33.3	66.7	0		
PHF	.250	.000	.250	.500	.000	.375	.000	.375	.000	.000	.000	.000	.250	.500	.000	.375	.550

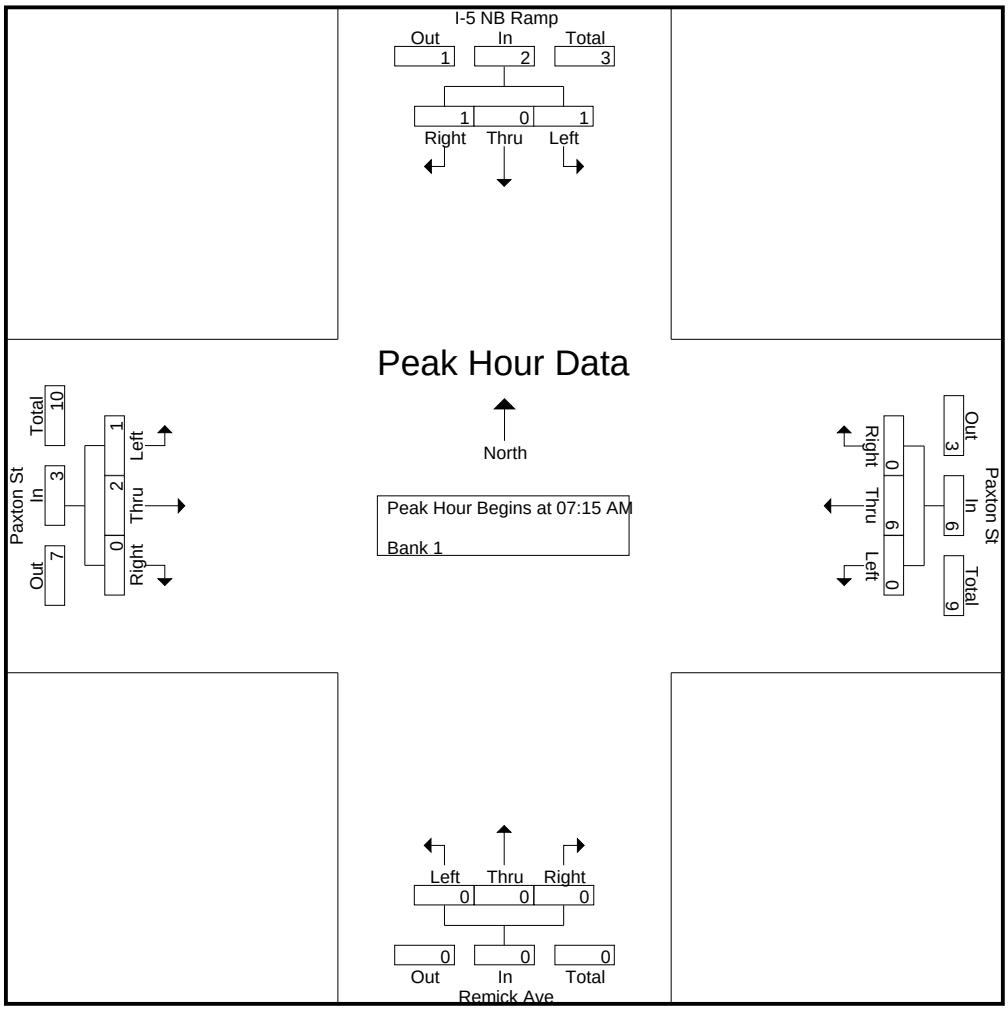

CITY TRAFFIC COUNTERS

626.991.7522

www.ctcounters.com

File Name : 5NBPaxton_3Axle
Site Code : 00000000
Start Date : 1/14/2014
Page No : 3

	I-5 NB Ramp Southbound				Paxton St Westbound				Remick Ave Northbound				Paxton St Eastbound				
Start Time	Left	Thru	Right	App. Total	Left	Thru	Right	App. Total	Left	Thru	Right	App. Total	Left	Thru	Right	App. Total	Int. Total
Peak Hour Analysis From 12:00 PM to 05:45 PM - Peak 1 of 1																	
Peak Hour for Entire Intersection Begins at 03:00 PM																	
03:00 PM	0	0	0	0	0	0	**1**	**1**	0	0	0	0	0	0	0	0	1
03:15 PM	0	0	0	0	0	0	0	0	0	0	0	0	0	**1**	0	1	1
03:30 PM	0	0	0	0	0	0	0	0	0	0	0	0	0	1	0	1	1
03:45 PM	0	0	0	0	0	0	0	0	0	0	0	0	**1**	1	0	**2**	**2**
Total Volume	0	0	0	0	0	0	1	1	0	0	0	0	1	3	0	4	5
% App. Total	0	0	0		0	0	100		0	0	0		25	75	0		
PHF	.000	.000	.000	.000	.000	.000	.250	.250	.000	.000	.000	.000	.250	.750	.000	.500	.625

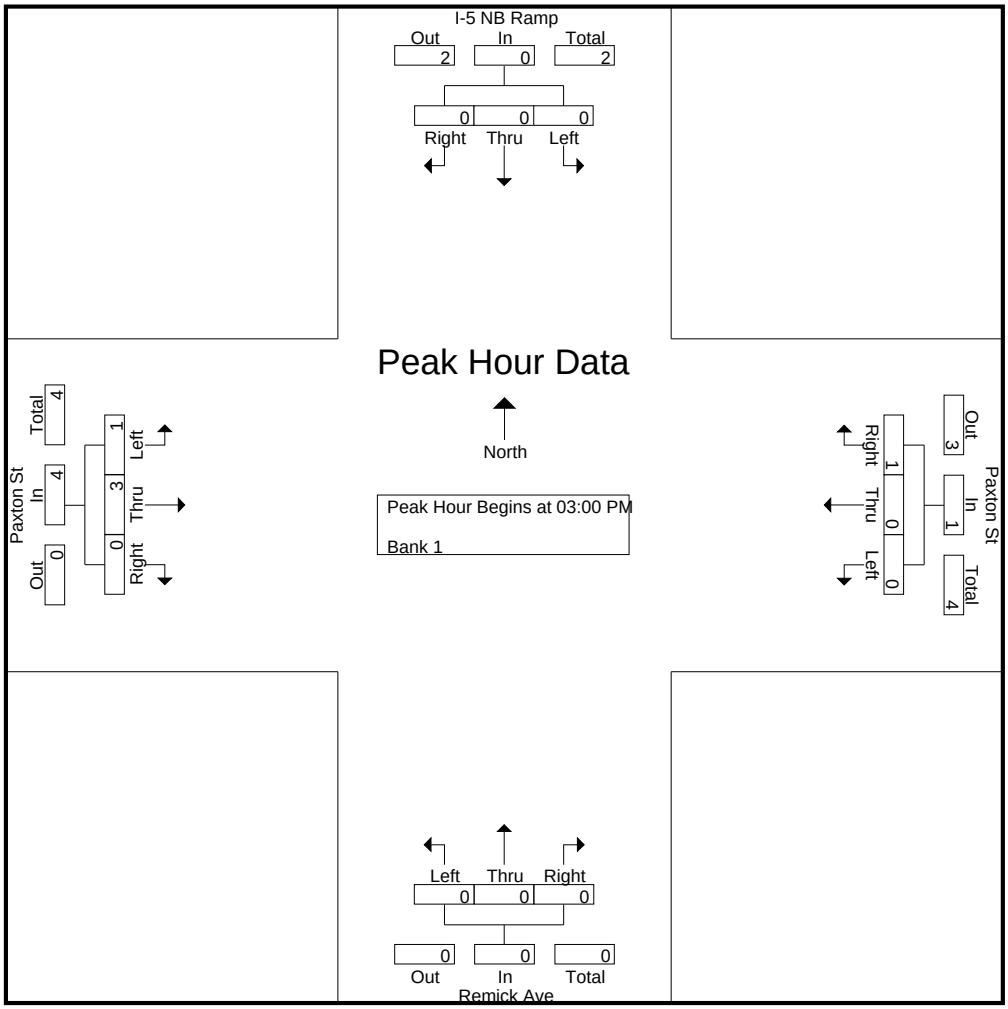

CITY TRAFFIC COUNTERS

626.991.7522

www.ctcounters.com

File Name : 5NBPaxton_4Axle
Site Code : 00000000
Start Date : 1/14/2014
Page No : 1

Groups Printed- Bank 2

	I-5 NB Ramp Southbound			Paxton St Westbound			Remick Ave Northbound			Paxton St Eastbound			
Start Time	Left	Thru	Right	Left	Thru	Right	Left	Thru	Right	Left	Thru	Right	Int. Total
07:00 AM	0	0	0	0	1	0	0	0	0	0	0	0	1
07:45 AM	0	0	0	0	2	0	0	0	0	0	0	0	2
Total	0	0	0	0	3	0	0	0	0	0	0	0	3
08:00 AM	0	0	0	0	0	1	0	0	0	0	1	0	2
08:30 AM	0	0	0	0	0	0	0	0	0	0	1	0	1
Total	0	0	0	0	0	1	0	0	0	0	2	0	3
01:45 PM	0	0	0	0	0	0	0	0	0	0	2	0	2
Total	0	0	0	0	0	0	0	0	0	0	2	0	2
03:00 PM	0	0	0	0	1	0	0	0	0	0	0	0	1
03:15 PM	0	0	0	0	0	0	0	0	0	1	0	0	1
03:30 PM	0	0	0	0	1	0	0	0	0	0	0	0	1
03:45 PM	0	0	0	0	0	0	0	0	0	0	1	0	1
Total	0	0	0	0	2	0	0	0	0	1	1	0	4
05:00 PM	0	0	0	0	1	0	0	0	0	0	0	0	1
05:30 PM	0	0	0	0	0	0	0	0	0	0	1	0	1
Total	0	0	0	0	1	0	0	0	0	0	1	0	2
Grand Total	0	0	0	0	6	1	0	0	0	1	6	0	14
Apprch %	0	0	0	0	85.7	14.3	0	0	0	14.3	85.7	0	
Total %	0	0	0	0	42.9	7.1	0	0	0	7.1	42.9	0	

CITY TRAFFIC COUNTERS

626.991.7522

www.ctcounters.com

File Name : 5NBPaxton_4Axle
Site Code : 00000000
Start Date : 1/14/2014
Page No : 2

	I-5 NB Ramp Southbound				Paxton St Westbound				Remick Ave Northbound				Paxton St Eastbound				
Start Time	Left	Thru	Right	App. Total	Left	Thru	Right	App. Total	Left	Thru	Right	App. Total	Left	Thru	Right	App. Total	Int. Total
Peak Hour Analysis From 07:00 AM to 09:45 AM - Peak 1 of 1																	
Peak Hour for Entire Intersection Begins at 07:45 AM																	
07:45 AM	0	0	0	0	0	**2**	0	**2**	0	0	0	0	0	0	0	0	**2**
08:00 AM	0	0	0	0	0	0	**1**	1	0	0	0	0	0	**1**	0	**1**	2
08:15 AM	0	0	0	0	0	0	0	0	0	0	0	0	0	0	0	0	0
08:30 AM	0	0	0	0	0	0	0	0	0	0	0	0	0	1	0	1	1
Total Volume	0	0	0	0	0	2	1	3	0	0	0	0	0	2	0	2	5
% App. Total	0	0	0		0	66.7	33.3		0	0	0		0	100	0		
PHF	.000	.000	.000	.000	.000	.250	.250	.375	.000	.000	.000	.000	.000	.500	.000	.500	.625

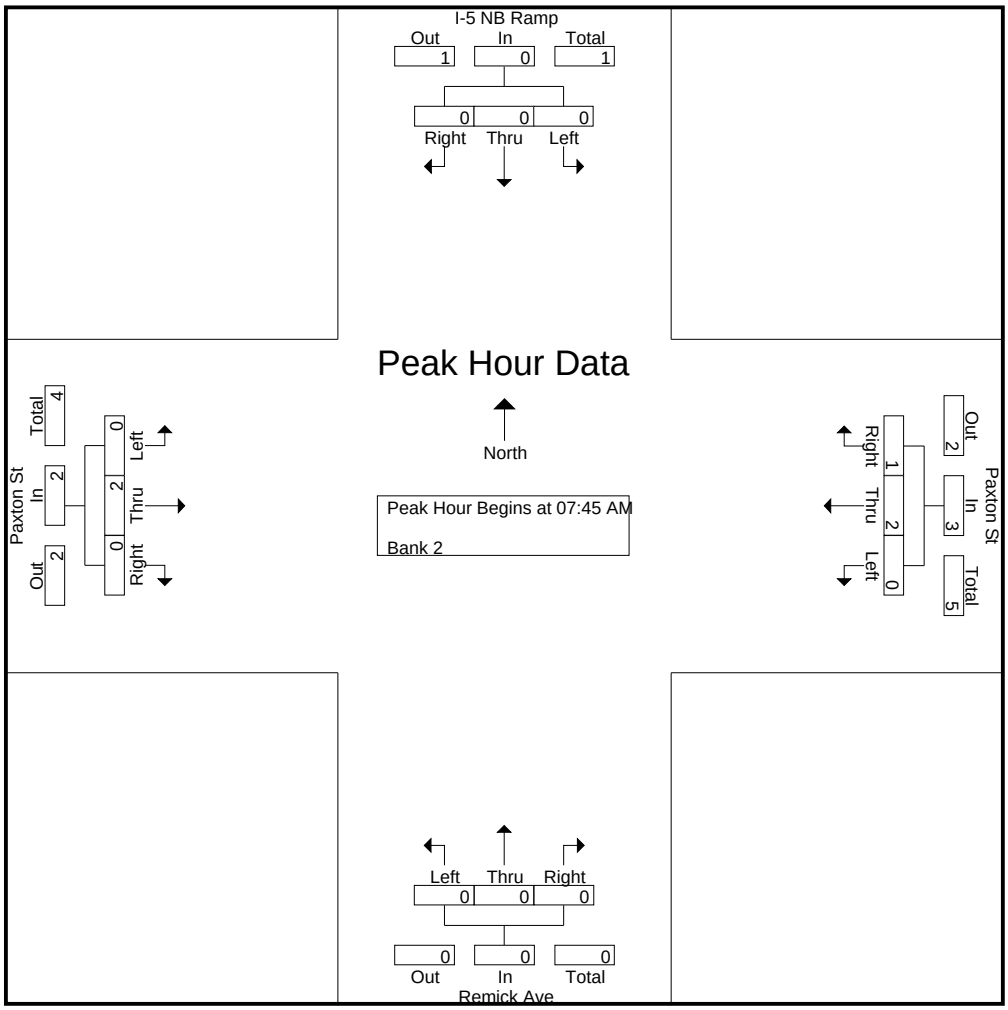

CITY TRAFFIC COUNTERS

626.991.7522

www.ctcounters.com

File Name : 5NBPaxton_4Axle
Site Code : 00000000
Start Date : 1/14/2014
Page No : 3

	I-5 NB Ramp Southbound				Paxton St Westbound				Remick Ave Northbound				Paxton St Eastbound				
Start Time	Left	Thru	Right	App. Total	Left	Thru	Right	App. Total	Left	Thru	Right	App. Total	Left	Thru	Right	App. Total	Int. Total
Peak Hour Analysis From 10:00 AM to 01:45 PM - Peak 1 of 1																	
Peak Hour for Entire Intersection Begins at 01:00 PM																	
01:00 PM	0	0	0	0	0	0	0	0	0	0	0	0	0	0	0	0	0
01:15 PM	0	0	0	0	0	0	0	0	0	0	0	0	0	0	0	0	0
01:30 PM	0	0	0	0	0	0	0	0	0	0	0	0	0	0	0	0	0
01:45 PM	0	0	0	0	0	0	0	0	0	0	0	0	0	**2**	0	**2**	**2**
Total Volume	0	0	0	0	0	0	0	0	0	0	0	0	0	2	0	2	2
% App. Total	0	0	0		0	0	0		0	0	0		0	100	0		
PHF	.000	.000	.000	.000	.000	.000	.000	.000	.000	.000	.000	.000	.000	.250	.000	.250	.250

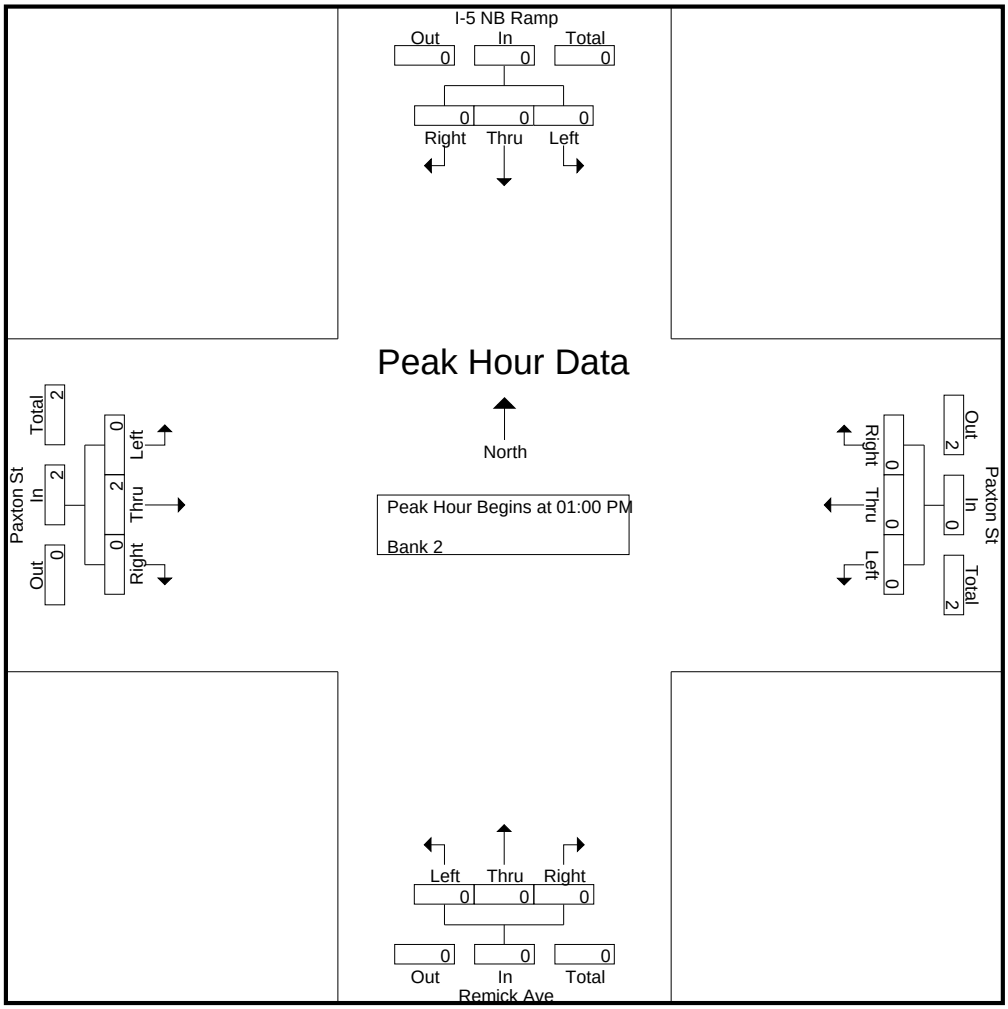

CITY TRAFFIC COUNTERS

626.991.7522

www.ctcounters.com

File Name : 5NBPaxton_4Axle
Site Code : 00000000
Start Date : 1/14/2014
Page No : 4

	I-5 NB Ramp Southbound				Paxton St Westbound				Remick Ave Northbound				Paxton St Eastbound				
Start Time	Left	Thru	Right	App. Total	Left	Thru	Right	App. Total	Left	Thru	Right	App. Total	Left	Thru	Right	App. Total	Int. Total
Peak Hour Analysis From 02:00 PM to 05:45 PM - Peak 1 of 1																	
Peak Hour for Entire Intersection Begins at 03:00 PM																	
03:00 PM	0	0	0	0	0	**1**	0	**1**	0	0	0	0	0	0	0	0	**1**
03:15 PM	0	0	0	0	0	0	0	0	0	0	0	0	**1**	0	0	**1**	1
03:30 PM	0	0	0	0	0	1	0	1	0	0	0	0	0	0	0	0	1
03:45 PM	0	0	0	0	0	0	0	0	0	0	0	0	0	**1**	0	1	1
Total Volume	0	0	0	0	0	2	0	2	0	0	0	0	1	1	0	2	4
% App. Total	0	0	0		0	100	0		0	0	0		50	50	0		
PHF	.000	.000	.000	.000	.000	.500	.000	.500	.000	.000	.000	.000	.250	.250	.000	.500	1.00

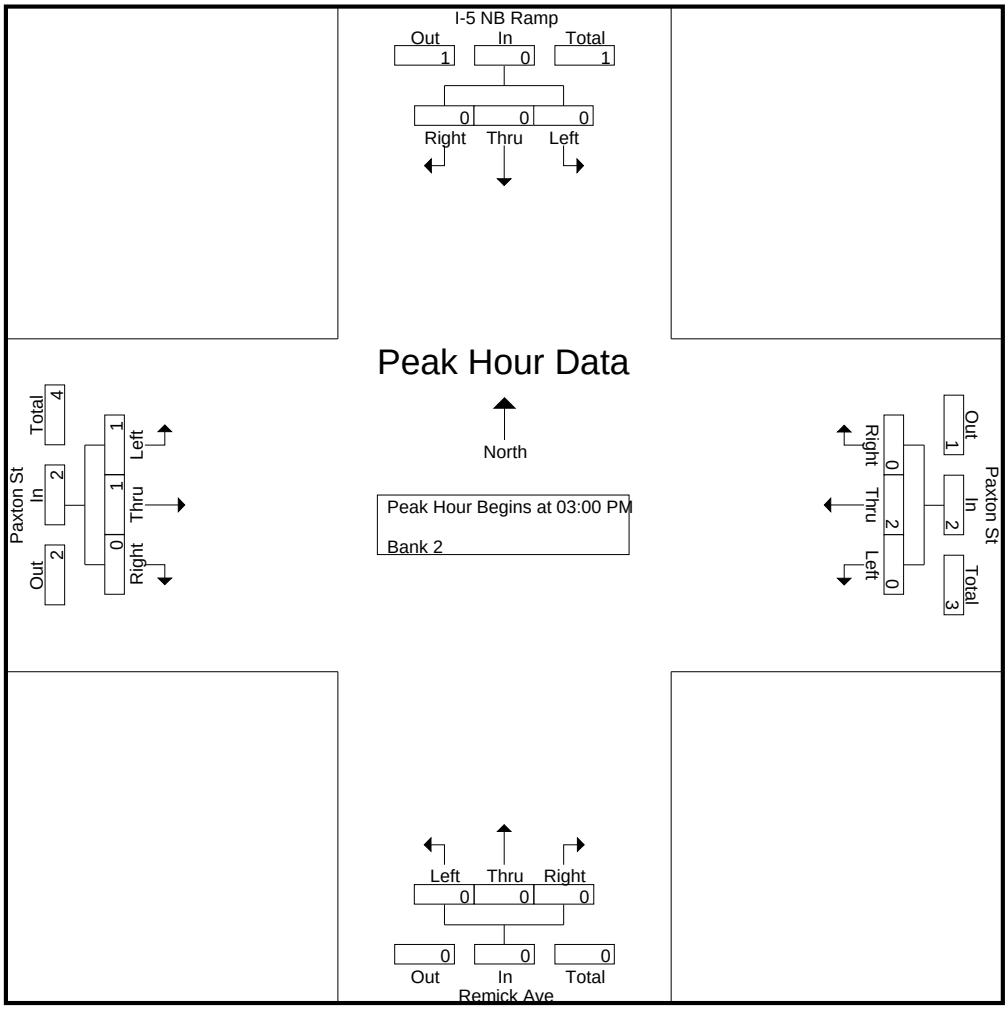

CITY TRAFFIC COUNTERS

626.991.7522

www.ctcounters.com

File Name : 5NBPaxton_5Axle
Site Code : 00000000
Start Date : 1/14/2014
Page No : 1

Groups Printed- Bank 2

	I-5 NB Ramp Southbound			Paxton St Westbound			Remick Ave Northbound			Paxton St Eastbound			
Start Time	Left	Thru	Right	Left	Thru	Right	Left	Thru	Right	Left	Thru	Right	Int. Total
07:30 AM	0	0	0	0	0	0	0	0	0	0	1	0	1
07:45 AM	0	0	0	0	0	0	0	0	0	0	1	0	1
Total	0	0	0	0	0	0	0	0	0	0	2	0	2
08:15 AM	0	0	0	0	0	0	0	0	0	0	1	0	1
08:30 AM	0	0	0	0	0	0	0	0	0	0	1	0	1
08:45 AM	0	0	0	0	0	1	0	0	0	0	0	0	1
Total	0	0	0	0	0	1	0	0	0	0	2	0	3
09:00 AM	0	0	0	0	1	0	0	0	0	0	2	0	3
09:15 AM	0	0	0	0	0	0	0	0	0	0	1	0	1
09:45 AM	0	0	0	0	0	0	0	0	0	1	2	0	3
Total	0	0	0	0	1	0	0	0	0	1	5	0	7
12:15 PM	0	0	0	0	0	0	0	0	0	0	2	0	2
12:30 PM	0	0	0	0	1	0	0	0	0	0	0	0	1
12:45 PM	0	0	0	0	0	1	0	0	0	0	0	0	1
Total	0	0	0	0	1	1	0	0	0	0	2	0	4
04:15 PM	0	0	0	0	0	0	0	0	0	1	0	0	1
Total	0	0	0	0	0	0	0	0	0	1	0	0	1
05:15 PM	1	0	0	0	0	0	0	0	0	0	0	0	1
Total	1	0	0	0	0	0	0	0	0	0	0	0	1
Grand Total	1	0	0	0	2	2	0	0	0	2	11	0	18
Apprch %	100	0	0	0	50	50	0	0	0	15.4	84.6	0	
Total %	5.6	0	0	0	11.1	11.1	0	0	0	11.1	61.1	0	

CITY TRAFFIC COUNTERS

626.991.7522

www.ctcounters.com

File Name : 5NBPaxton_5Axle
Site Code : 00000000
Start Date : 1/14/2014
Page No : 2

	I-5 NB Ramp Southbound				Paxton St Westbound				Remick Ave Northbound				Paxton St Eastbound				
Start Time	Left	Thru	Right	App. Total	Left	Thru	Right	App. Total	Left	Thru	Right	App. Total	Left	Thru	Right	App. Total	Int. Total
Peak Hour Analysis From 07:00 AM to 09:45 AM - Peak 1 of 1																	
Peak Hour for Entire Intersection Begins at 09:00 AM																	
09:00 AM	0	0	0	0	0	**1**	0	**1**	0	0	0	0	0	**2**	0	2	**3**
09:15 AM	0	0	0	0	0	0	0	0	0	0	0	0	0	1	0	1	1
09:30 AM	0	0	0	0	0	0	0	0	0	0	0	0	0	0	0	0	0
09:45 AM	0	0	0	0	0	0	0	0	0	0	0	0	**1**	2	0	**3**	3
Total Volume	0	0	0	0	0	1	0	1	0	0	0	0	1	5	0	6	7
% App. Total	0	0	0		0	100	0		0	0	0		16.7	83.3	0		
PHF	.000	.000	.000	.000	.000	.250	.000	.250	.000	.000	.000	.000	.250	.625	.000	.500	.583

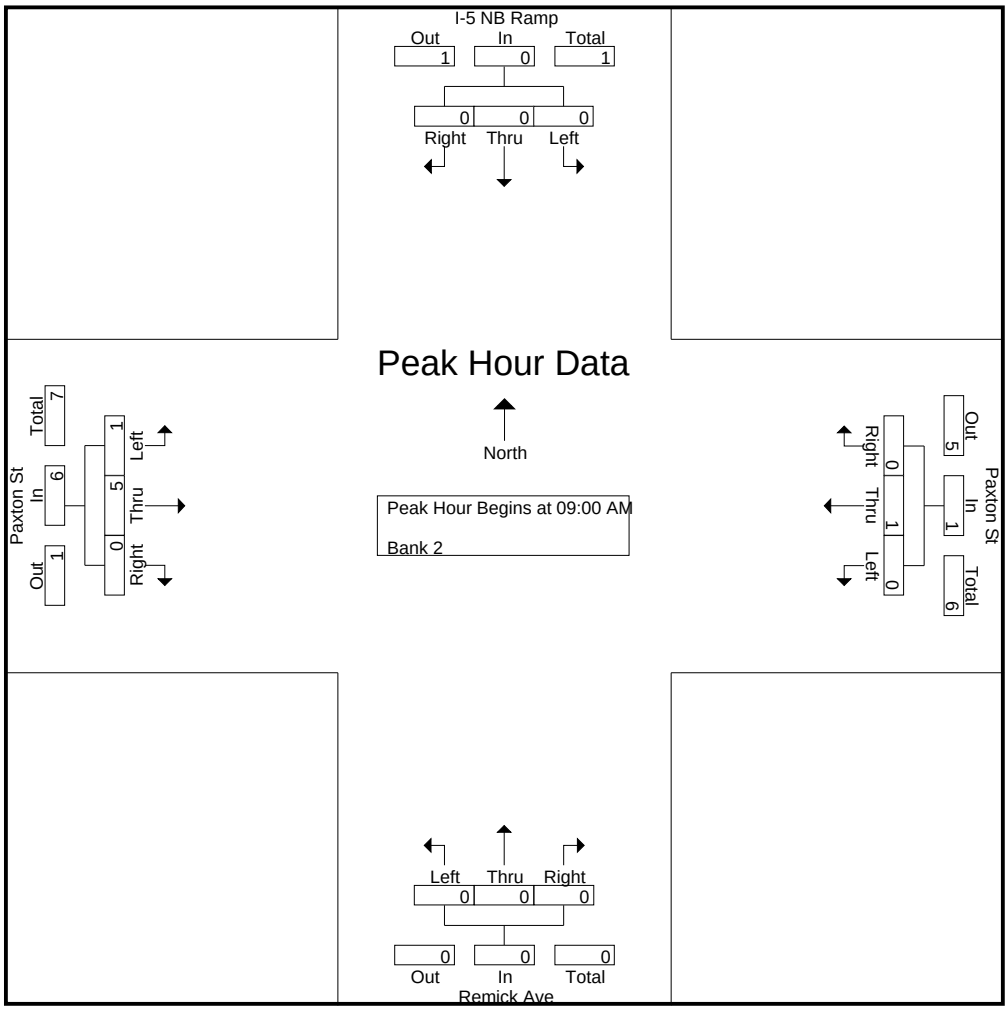

CITY TRAFFIC COUNTERS

626.991.7522

www.ctcounters.com

File Name : 5NBPaxton_5Axle
Site Code : 00000000
Start Date : 1/14/2014
Page No : 3

	I-5 NB Ramp Southbound				Paxton St Westbound				Remick Ave Northbound				Paxton St Eastbound				
Start Time	Left	Thru	Right	App. Total	Left	Thru	Right	App. Total	Left	Thru	Right	App. Total	Left	Thru	Right	App. Total	Int. Total
Peak Hour Analysis From 10:00 AM to 01:45 PM - Peak 1 of 1																	
Peak Hour for Entire Intersection Begins at 12:00 PM																	
12:00 PM	0	0	0	0	0	0	0	0	0	0	0	0	0	0	0	0	0
12:15 PM	0	0	0	0	0	0	0	0	0	0	0	0	0	**2**	0	**2**	**2**
12:30 PM	0	0	0	0	0	**1**	0	**1**	0	0	0	0	0	0	0	0	1
12:45 PM	0	0	0	0	0	0	**1**	1	0	0	0	0	0	0	0	0	1
Total Volume	0	0	0	0	0	1	1	2	0	0	0	0	0	2	0	2	4
% App. Total	0	0	0		0	50	50		0	0	0		0	100	0		
PHF	.000	.000	.000	.000	.000	.250	.250	.500	.000	.000	.000	.000	.000	.250	.000	.250	.500

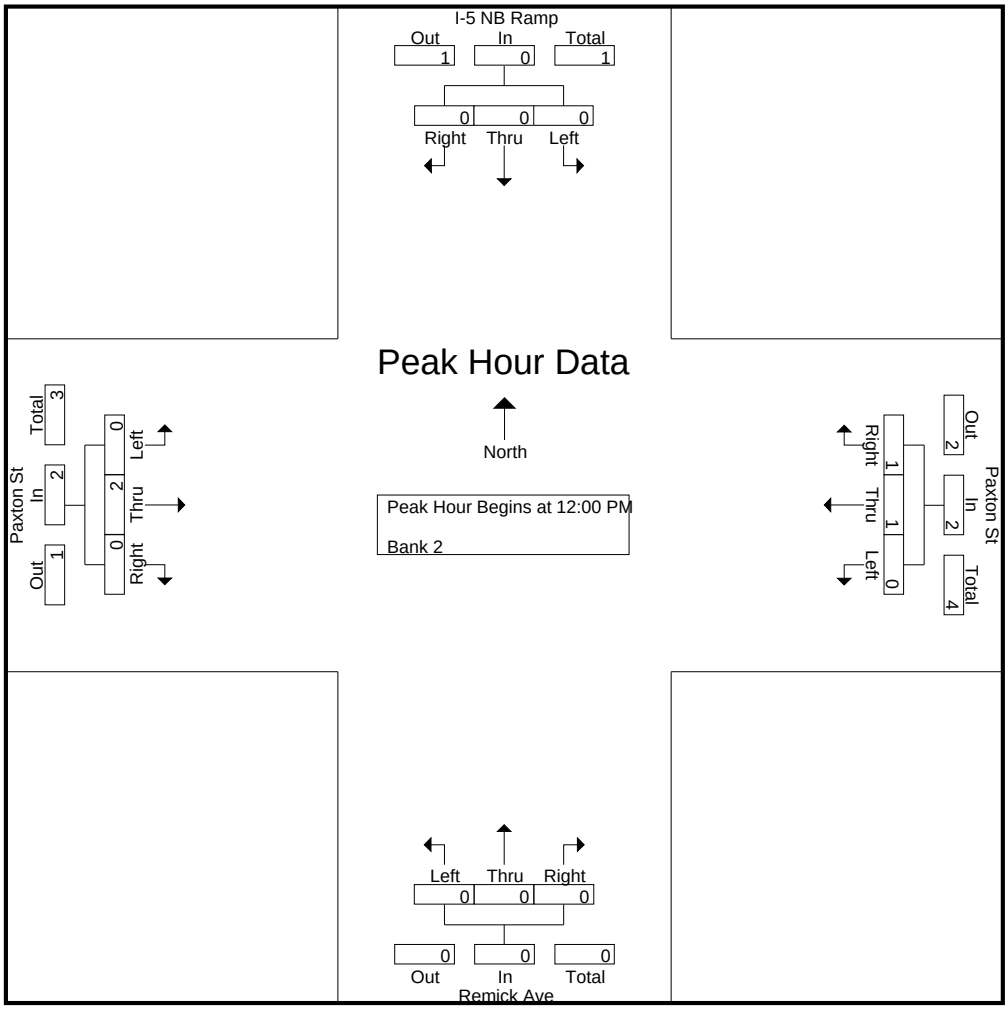

CITY TRAFFIC COUNTERS

626.991.7522

www.ctcounters.com

File Name : 5NBPaxton_5Axle
Site Code : 00000000
Start Date : 1/14/2014
Page No : 4

	I-5 NB Ramp Southbound				Paxton St Westbound				Remick Ave Northbound				Paxton St Eastbound				
Start Time	Left	Thru	Right	App. Total	Left	Thru	Right	App. Total	Left	Thru	Right	App. Total	Left	Thru	Right	App. Total	Int. Total
Peak Hour Analysis From 02:00 PM to 05:45 PM - Peak 1 of 1																	
Peak Hour for Entire Intersection Begins at 03:30 PM																	
03:30 PM	0	0	0	0	0	0	0	0	0	0	0	0	0	0	0	0	0
03:45 PM	0	0	0	0	0	0	0	0	0	0	0	0	0	0	0	0	0
04:00 PM	0	0	0	0	0	0	0	0	0	0	0	0	0	0	0	0	0
04:15 PM	0	0	0	0	0	0	0	0	0	0	0	0	**1**	0	0	**1**	**1**
Total Volume	0	0	0	0	0	0	0	0	0	0	0	0	1	0	0	1	1
% App. Total	0	0	0		0	0	0		0	0	0		100	0	0		
PHF	.000	.000	.000	.000	.000	.000	.000	.000	.000	.000	.000	.000	.250	.000	.000	.250	.250

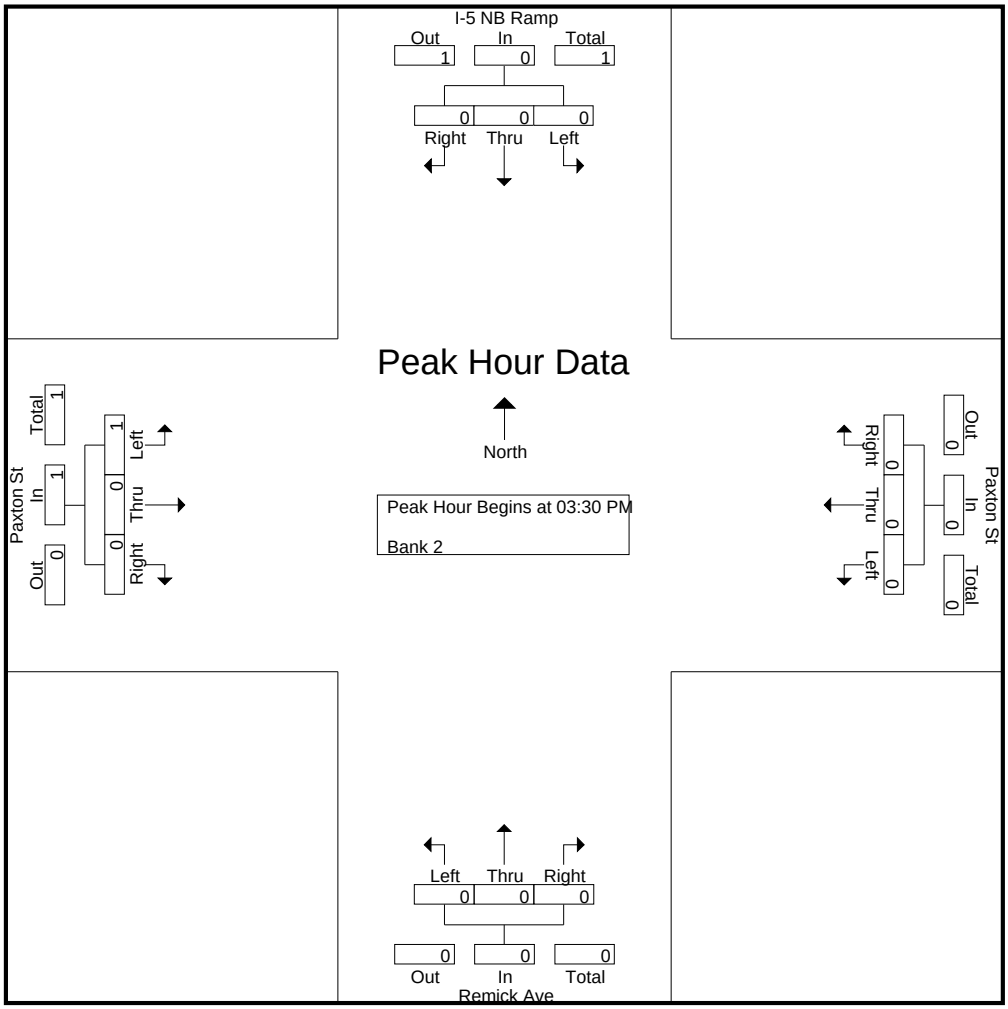

CITY TRAFFIC COUNTERS

626.991.7522

www.ctcounters.com

File Name : LCBranford
Site Code : 00000000
Start Date : 1/14/2014
Page No : 1

Groups Printed- Unshifted

	Laurel Canyon Blvd Southbound			Branford St Westbound			Laurel Canyon Blvd Northbound			Branford St Eastbound			
Start Time	Left	Thru	Right	Left	Thru	Right	Left	Thru	Right	Left	Thru	Right	Int. Total
07:00 AM	19	188	30	32	75	18	20	44	18	13	72	56	585
07:15 AM	21	197	21	41	114	14	23	61	29	18	106	65	710
07:30 AM	22	245	34	39	128	21	39	91	24	25	122	88	878
07:45 AM	39	195	33	24	130	11	51	109	31	22	131	87	863
Total	101	825	118	136	447	64	133	305	102	78	431	296	3036
08:00 AM	26	230	28	26	83	11	23	91	41	24	126	66	775
08:15 AM	19	235	35	20	74	13	17	81	33	18	88	39	672
08:30 AM	10	196	28	18	38	13	10	60	14	12	59	55	513
08:45 AM	19	211	29	21	60	16	16	41	16	12	59	30	530
Total	74	872	120	85	255	53	66	273	104	66	332	190	2490
09:00 AM	14	192	20	17	42	17	14	55	15	13	35	31	465
09:15 AM	10	118	16	16	47	18	9	61	13	13	40	31	392
09:30 AM	13	80	23	5	44	15	9	47	12	12	44	21	325
09:45 AM	17	73	22	19	46	16	12	64	20	9	42	19	359
Total	54	463	81	57	179	66	44	227	60	47	161	102	1541
12:00 PM	19	81	20	12	46	15	21	78	21	13	49	18	393
12:15 PM	24	87	25	22	41	19	15	73	12	20	48	28	414
12:30 PM	14	79	21	26	43	18	14	90	21	22	58	21	427
12:45 PM	18	74	21	18	55	22	15	82	18	23	51	24	421
Total	75	321	87	78	185	74	65	323	72	78	206	91	1655
01:00 PM	12	94	25	15	57	16	21	80	19	31	45	23	438
01:15 PM	23	82	47	18	52	18	25	95	23	20	53	34	490
01:30 PM	15	88	21	27	72	25	20	113	35	36	67	53	572
01:45 PM	15	91	34	27	65	31	25	142	22	22	52	40	566
Total	65	355	127	87	246	90	91	430	99	109	217	150	2066
03:00 PM	21	84	29	20	63	23	14	96	26	36	63	29	504
03:15 PM	14	94	28	15	76	16	28	98	18	33	57	38	515
03:30 PM	17	102	48	26	98	26	29	148	22	28	85	25	654
03:45 PM	16	107	45	25	57	21	22	145	44	31	68	32	613
Total	68	387	150	86	294	86	93	487	110	128	273	124	2286
04:00 PM	8	92	31	15	92	21	23	141	30	32	79	30	594
04:15 PM	30	86	20	27	76	25	22	177	36	37	61	16	613
04:30 PM	17	83	32	24	92	31	27	184	30	31	63	19	633
04:45 PM	15	93	36	52	107	41	27	187	21	34	81	33	727
Total	70	354	119	118	367	118	99	689	117	134	284	98	2567
05:00 PM	12	116	28	26	122	23	26	193	27	37	85	44	739
05:15 PM	15	107	31	34	107	33	36	223	49	36	96	40	807
05:30 PM	15	107	38	30	80	32	23	198	35	41	85	43	727
05:45 PM	21	94	40	25	68	13	24	209	33	54	79	29	689
Total	63	424	137	115	377	101	109	823	144	168	345	156	2962
Grand Total	570	4001	939	762	2350	652	700	3557	808	808	2249	1207	18603
Apprch %	10.3	72.6	17	20.2	62.4	17.3	13.8	70.2	16	18.9	52.7	28.3	
Total %	3.1	21.5	5	4.1	12.6	3.5	3.8	19.1	4.3	4.3	12.1	6.5	

CITY TRAFFIC COUNTERS

626.991.7522

www.ctcounters.com

File Name : LCBranford
Site Code : 00000000
Start Date : 1/14/2014
Page No : 2

	Laurel Canyon Blvd Southbound				Branford St Westbound				Laurel Canyon Blvd Northbound				Branford St Eastbound				
Start Time	Left	Thru	Right	App. Total	Left	Thru	Right	App. Total	Left	Thru	Right	App. Total	Left	Thru	Right	App. Total	Int. Total
Peak Hour Analysis From 07:00 AM to 09:45 AM - Peak 1 of 1																	
Peak Hour for Entire Intersection Begins at 07:15 AM																	
07:15 AM	21	197	21	239	**41**	114	14	169	23	61	29	113	18	106	65	189	710
07:30 AM	22	**245**	**34**	**301**	39	128	**21**	**188**	39	91	24	154	**25**	122	**88**	235	**878**
07:45 AM	**39**	195	33	267	24	**130**	11	165	**51**	**109**	31	**191**	22	**131**	87	**240**	863
08:00 AM	26	230	28	284	26	83	11	120	23	91	**41**	155	24	126	66	216	775
Total Volume	108	867	116	1091	130	455	57	642	136	352	125	613	89	485	306	880	3226
% App. Total	9.9	79.5	10.6		20.2	70.9	8.9		22.2	57.4	20.4		10.1	55.1	34.8		
PHF	.692	.885	.853	.906	.793	.875	.679	.854	.667	.807	.762	.802	.890	.926	.869	.917	.919

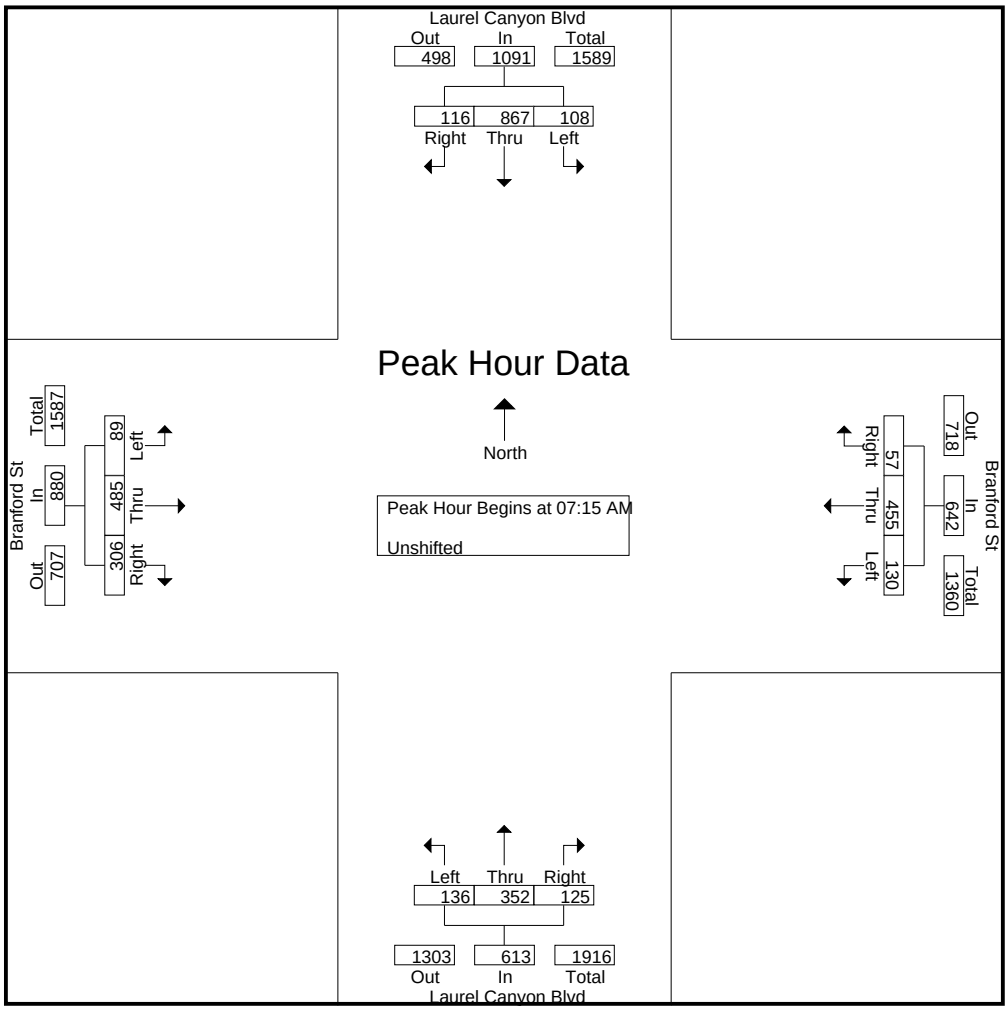

CITY TRAFFIC COUNTERS

626.991.7522

www.ctcounters.com

File Name : LCBranford
Site Code : 00000000
Start Date : 1/14/2014
Page No : 3

	Laurel Canyon Blvd Southbound				Branford St Westbound				Laurel Canyon Blvd Northbound				Branford St Eastbound				
Start Time	Left	Thru	Right	App. Total	Left	Thru	Right	App. Total	Left	Thru	Right	App. Total	Left	Thru	Right	App. Total	Int. Total
Peak Hour Analysis From 10:00 AM to 01:45 PM - Peak 1 of 1																	
Peak Hour for Entire Intersection Begins at 01:00 PM																	
01:00 PM	12	**94**	25	131	15	57	16	88	21	80	19	120	31	45	23	99	438
01:15 PM	**23**	82	**47**	**152**	18	52	18	88	**25**	95	23	143	20	53	34	107	490
01:30 PM	15	88	21	124	**27**	**72**	25	**124**	20	113	**35**	168	**36**	**67**	**53**	**156**	**572**
01:45 PM	15	91	34	140	27	65	**31**	123	25	**142**	22	**189**	22	52	40	114	566
Total Volume	65	355	127	547	87	246	90	423	91	430	99	620	109	217	150	476	2066
% App. Total	11.9	64.9	23.2		20.6	58.2	21.3		14.7	69.4	16		22.9	45.6	31.5		
PHF	.707	.944	.676	.900	.806	.854	.726	.853	.910	.757	.707	.820	.757	.810	.708	.763	.903

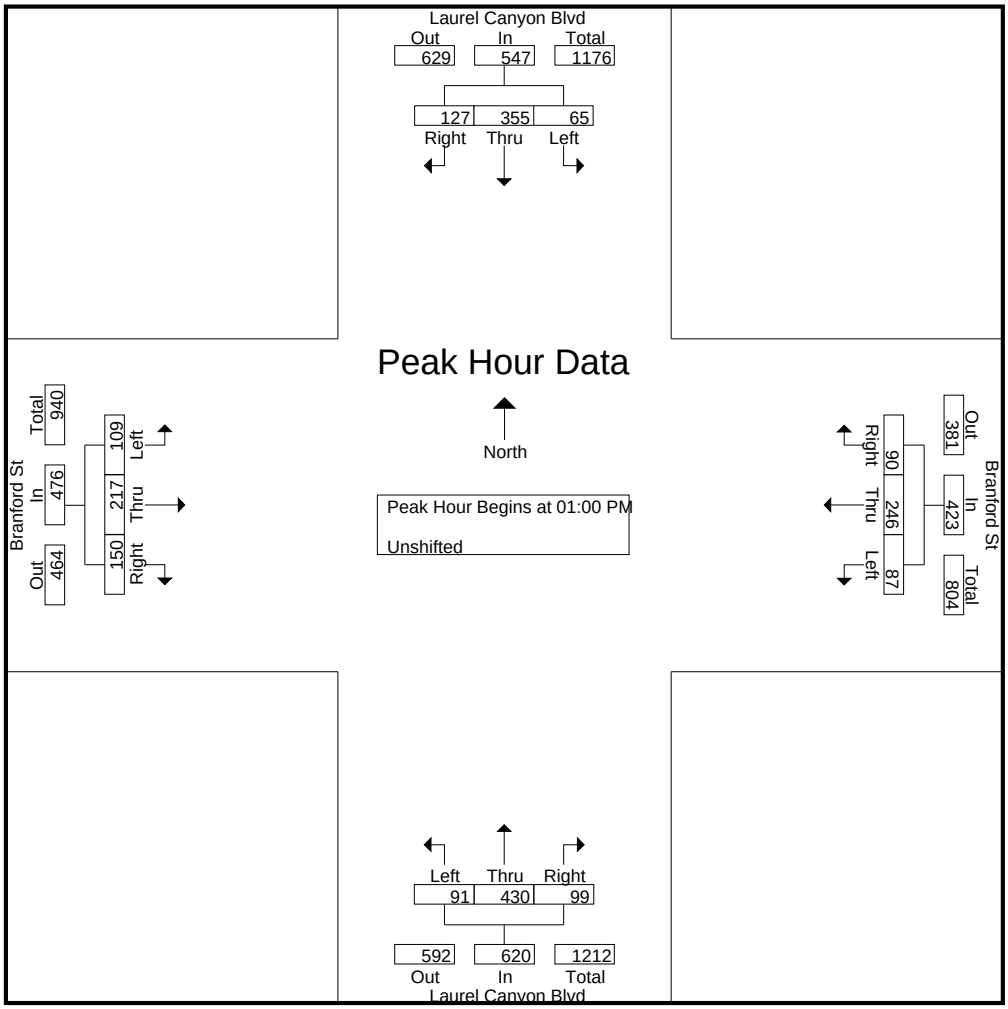

CITY TRAFFIC COUNTERS

626.991.7522

www.ctcounters.com

File Name : LCBranford
Site Code : 00000000
Start Date : 1/14/2014
Page No : 4

	Laurel Canyon Blvd Southbound				Branford St Westbound				Laurel Canyon Blvd Northbound				Branford St Eastbound				
Start Time	Left	Thru	Right	App. Total	Left	Thru	Right	App. Total	Left	Thru	Right	App. Total	Left	Thru	Right	App. Total	Int. Total
Peak Hour Analysis From 02:00 PM to 05:45 PM - Peak 1 of 1																	
Peak Hour for Entire Intersection Begins at 04:45 PM																	
04:45 PM	**15**	93	36	144	**52**	107	**41**	**200**	27	187	21	235	34	81	33	148	727
05:00 PM	12	**116**	28	156	26	**122**	23	171	26	193	27	246	37	85	**44**	166	739
05:15 PM	15	107	31	153	34	107	33	174	**36**	**223**	**49**	**308**	36	**96**	40	**172**	**807**
05:30 PM	15	107	**38**	**160**	30	80	32	142	23	198	35	256	**41**	85	43	169	727
Total Volume	57	423	133	613	142	416	129	687	112	801	132	1045	148	347	160	655	3000
% App. Total	9.3	69	21.7		20.7	60.6	18.8		10.7	76.7	12.6		22.6	53	24.4		
PHF	.950	.912	.875	.958	.683	.852	.787	.859	.778	.898	.673	.848	.902	.904	.909	.952	.929

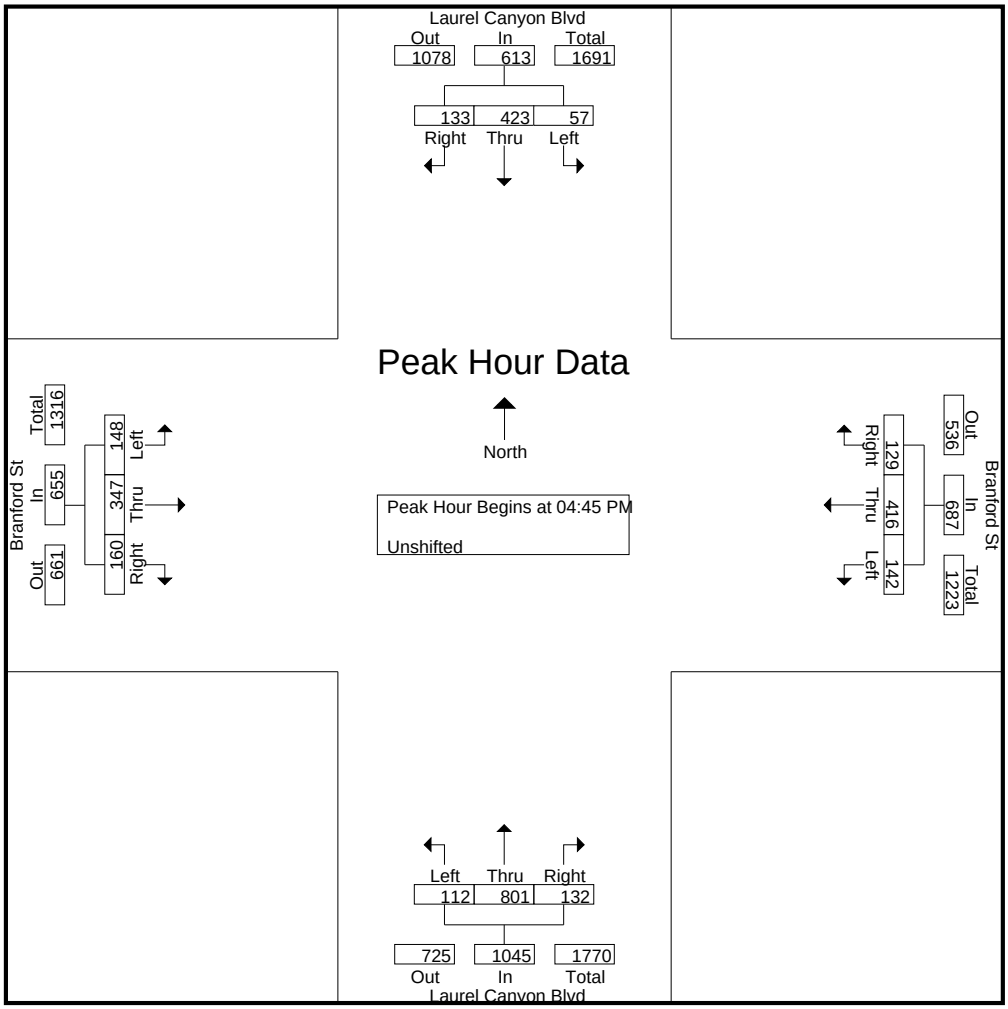

CITY TRAFFIC COUNTERS

626.991.7522

www.ctcounters.com

File Name : LCBranford_MC
Site Code : 00000000
Start Date : 1/14/2014
Page No : 1

Groups Printed- Bank 2

	Laurel Canyon Blvd Southbound			Branford St Westbound			Laurel Canyon Blvd Northbound			Branford St Eastbound			
Start Time	Left	Thru	Right	Left	Thru	Right	Left	Thru	Right	Left	Thru	Right	Int. Total
07:00 AM	1	0	1	0	0	0	0	0	0	0	0	2	4
07:15 AM	0	0	0	0	0	0	0	0	0	0	1	0	1
07:45 AM	0	1	0	0	0	0	0	0	0	0	1	0	2
Total	1	1	1	0	0	0	0	0	0	0	2	2	7
08:15 AM	0	1	0	0	0	0	0	0	0	0	1	0	2
Total	0	1	0	0	0	0	0	0	0	0	1	0	2
09:15 AM	0	1	0	0	0	1	0	0	0	0	1	0	3
09:30 AM	0	0	0	0	2	0	0	0	0	0	0	0	2
09:45 AM	0	0	0	0	0	0	0	0	0	0	1	0	1
Total	0	1	0	0	2	1	0	0	0	0	2	0	6
12:00 PM	0	1	0	0	0	0	0	0	0	0	1	0	2
12:30 PM	0	0	0	0	0	0	0	1	0	1	0	1	3
Total	0	1	0	0	0	0	0	1	0	1	1	1	5
01:30 PM	0	0	0	1	0	0	0	1	0	0	0	0	2
01:45 PM	0	0	0	0	0	0	0	0	0	0	0	1	1
Total	0	0	0	1	0	0	0	1	0	0	0	1	3
03:00 PM	0	0	0	0	0	0	0	0	0	0	2	0	2
03:15 PM	0	0	0	1	0	0	0	1	0	1	0	0	3
03:30 PM	0	0	0	0	0	0	1	0	0	0	0	0	1
03:45 PM	0	0	0	0	0	0	0	0	0	0	0	14	14
Total	0	0	0	1	0	0	1	1	0	1	2	14	20
04:15 PM	0	2	0	0	0	6	0	0	0	1	0	0	9
04:45 PM	0	0	0	0	1	0	0	1	0	0	0	0	2
Total	0	2	0	0	1	6	0	1	0	1	0	0	11
05:00 PM	0	0	0	0	0	0	0	0	0	0	1	0	1
05:30 PM	0	1	0	0	0	0	0	1	0	0	1	0	3
05:45 PM	0	0	0	0	0	0	0	0	0	2	0	0	2
Total	0	1	0	0	0	0	0	1	0	2	2	0	6
Grand Total	1	7	1	2	3	7	1	5	0	5	10	18	60
Apprch %	11.1	77.8	11.1	16.7	25	58.3	16.7	83.3	0	15.2	30.3	54.5	
Total %	1.7	11.7	1.7	3.3	5	11.7	1.7	8.3	0	8.3	16.7	30	

CITY TRAFFIC COUNTERS

626.991.7522

www.ctcounters.com

File Name : LCBranford_MC
Site Code : 00000000
Start Date : 1/14/2014
Page No : 2

	Laurel Canyon Blvd Southbound				Branford St Westbound				Laurel Canyon Blvd Northbound				Branford St Eastbound				
Start Time	Left	Thru	Right	App. Total	Left	Thru	Right	App. Total	Left	Thru	Right	App. Total	Left	Thru	Right	App. Total	Int. Total
Peak Hour Analysis From 07:00 AM to 09:45 AM - Peak 1 of 1																	
Peak Hour for Entire Intersection Begins at 07:00 AM																	
07:00 AM	**1**	0	**1**	**2**	0	0	0	0	0	0	0	0	0	0	**2**	**2**	**4**
07:15 AM	0	0	0	0	0	0	0	0	0	0	0	0	0	**1**	0	1	1
07:30 AM	0	0	0	0	0	0	0	0	0	0	0	0	0	0	0	0	0
07:45 AM	0	**1**	0	1	0	0	0	0	0	0	0	0	0	1	0	1	2
Total Volume	1	1	1	3	0	0	0	0	0	0	0	0	0	2	2	4	7
% App. Total	33.3	33.3	33.3		0	0	0		0	0	0		0	50	50		
PHF	.250	.250	.250	.375	.000	.000	.000	.000	.000	.000	.000	.000	.000	.500	.250	.500	.438

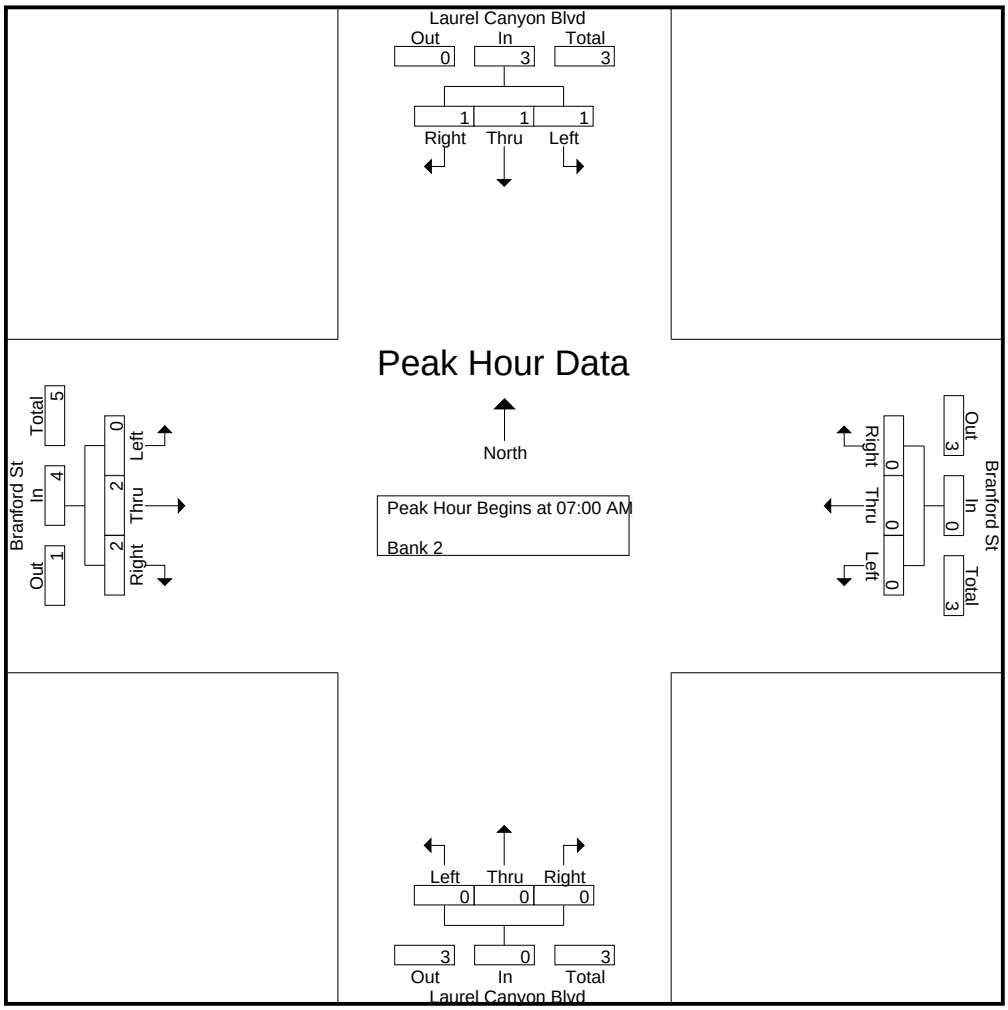

CITY TRAFFIC COUNTERS

626.991.7522

www.ctcounters.com

File Name : LCBranford_MC
Site Code : 00000000
Start Date : 1/14/2014
Page No : 3

	Laurel Canyon Blvd Southbound				Branford St Westbound				Laurel Canyon Blvd Northbound				Branford St Eastbound				
Start Time	Left	Thru	Right	App. Total	Left	Thru	Right	App. Total	Left	Thru	Right	App. Total	Left	Thru	Right	App. Total	Int. Total
Peak Hour Analysis From 10:00 AM to 01:45 PM - Peak 1 of 1																	
Peak Hour for Entire Intersection Begins at 11:45 AM																	
11:45 AM	0	0	0	0	0	0	0	0	0	0	0	0	0	0	0	0	0
12:00 PM	0	**1**	0	**1**	0	0	0	0	0	0	0	0	0	**1**	0	1	2
12:15 PM	0	0	0	0	0	0	0	0	0	0	0	0	0	0	0	0	0
12:30 PM	0	0	0	0	0	0	0	0	0	**1**	0	**1**	**1**	0	**1**	**2**	**3**
Total Volume	0	1	0	1	0	0	0	0	0	1	0	1	1	1	1	3	5
% App. Total	0	100	0		0	0	0		0	100	0		33.3	33.3	33.3		
PHF	.000	.250	.000	.250	.000	.000	.000	.000	.000	.250	.000	.250	.250	.250	.250	.375	.417

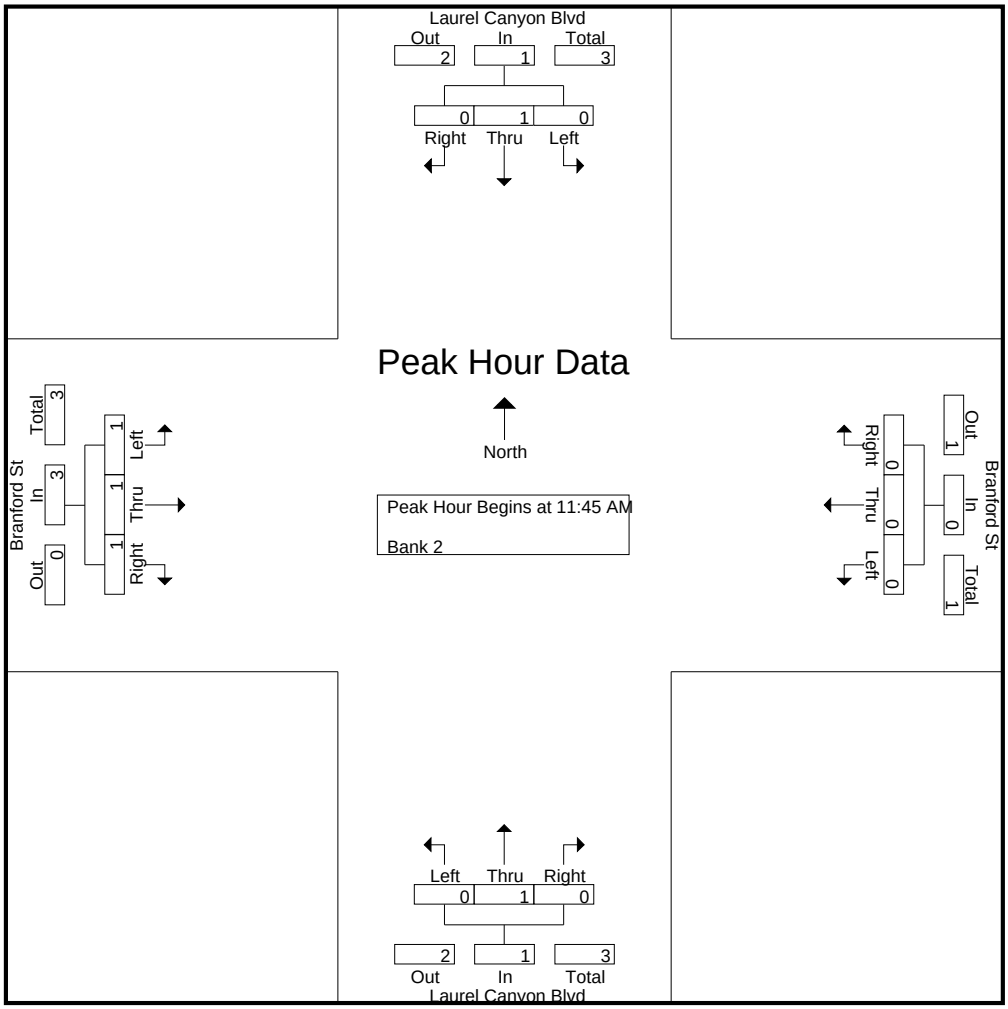

CITY TRAFFIC COUNTERS

626.991.7522

www.ctcounters.com

File Name : LCBranford_MC
Site Code : 00000000
Start Date : 1/14/2014
Page No : 4

	Laurel Canyon Blvd Southbound				Branford St Westbound				Laurel Canyon Blvd Northbound				Branford St Eastbound				
Start Time	Left	Thru	Right	App. Total	Left	Thru	Right	App. Total	Left	Thru	Right	App. Total	Left	Thru	Right	App. Total	Int. Total
Peak Hour Analysis From 02:00 PM to 05:45 PM - Peak 1 of 1																	
Peak Hour for Entire Intersection Begins at 03:30 PM																	
03:30 PM	0	0	0	0	0	0	0	0	**1**	0	0	**1**	0	0	0	0	1
03:45 PM	0	0	0	0	0	0	0	0	0	0	0	0	0	0	**14**	**14**	**14**
04:00 PM	0	0	0	0	0	0	0	0	0	0	0	0	0	0	0	0	0
04:15 PM	0	**2**	0	**2**	0	0	**6**	**6**	0	0	0	0	**1**	0	0	1	9
Total Volume	0	2	0	2	0	0	6	6	1	0	0	1	1	0	14	15	24
% App. Total	0	100	0		0	0	100		100	0	0		6.7	0	93.3		
PHF	.000	.250	.000	.250	.000	.000	.250	.250	.250	.000	.000	.250	.250	.000	.250	.268	.429

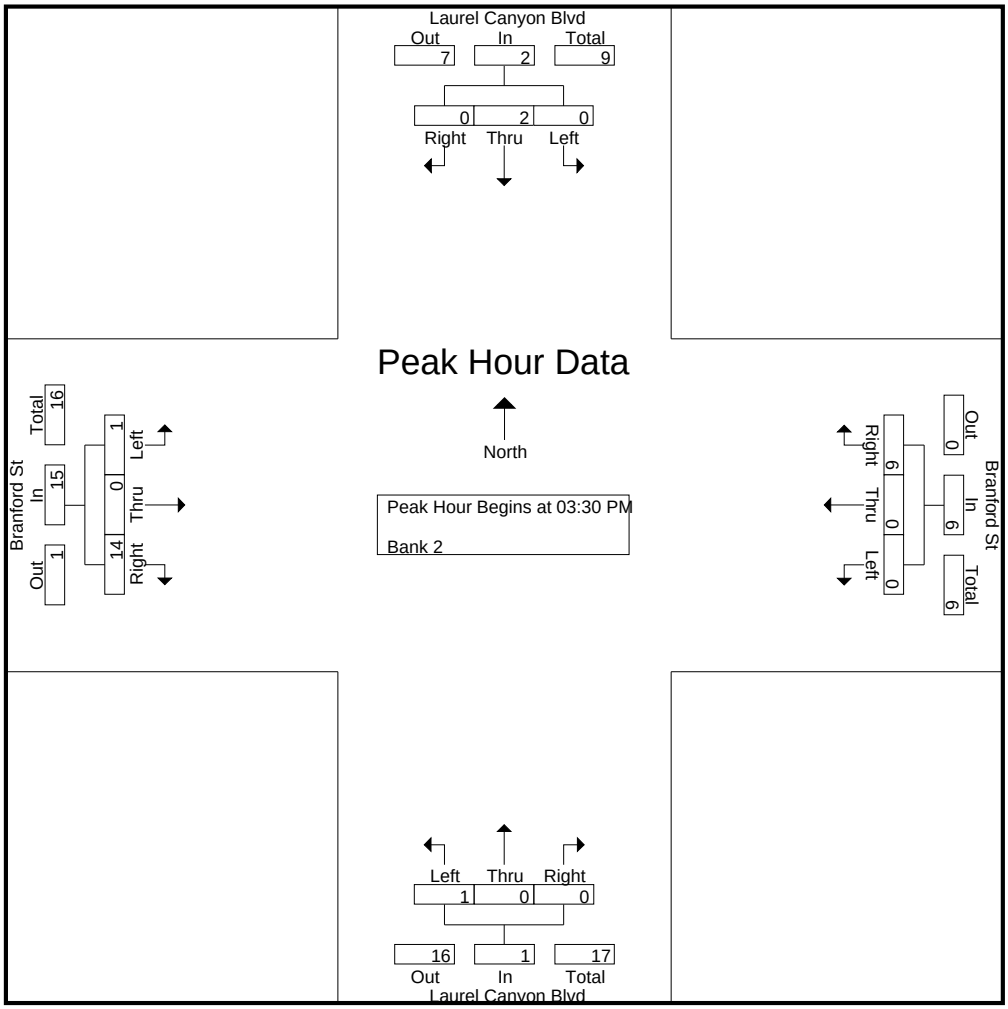

CITY TRAFFIC COUNTERS

626.991.7522

www.ctcounters.com

File Name : LCBranford_Bus
Site Code : 00000000
Start Date : 1/14/2014
Page No : 1

Groups Printed- Bank 1

	Laurel Canyon Blvd Southbound			Branford St Westbound			Laurel Canyon Blvd Northbound			Branford St Eastbound			
Start Time	Left	Thru	Right	Left	Thru	Right	Left	Thru	Right	Left	Thru	Right	Int. Total
07:00 AM	1	2	0	0	1	0	2	2	0	0	0	1	9
07:15 AM	0	1	1	1	0	0	0	2	1	0	0	1	7
07:30 AM	0	2	0	0	0	0	0	2	0	0	0	1	5
07:45 AM	0	4	0	0	0	0	2	1	0	0	0	0	7
Total	1	9	1	1	1	0	4	7	1	0	0	3	28
08:00 AM	0	2	0	0	0	0	0	1	0	0	0	0	3
08:15 AM	0	4	0	0	0	0	0	0	0	0	0	0	4
08:30 AM	0	1	0	0	0	0	0	1	0	0	0	0	2
08:45 AM	0	1	0	0	0	0	0	2	1	0	0	0	4
Total	0	8	0	0	0	0	0	4	1	0	0	0	13
09:00 AM	0	1	0	0	0	0	0	1	0	0	0	0	2
09:15 AM	0	0	0	0	0	0	0	2	0	0	0	0	2
09:30 AM	0	1	0	0	0	0	0	2	0	0	0	0	3
09:45 AM	0	0	0	0	0	0	0	2	1	0	0	0	3
Total	0	2	0	0	0	0	0	7	1	0	0	0	10
12:00 PM	0	2	0	0	0	0	0	0	0	0	0	0	2
12:15 PM	0	0	0	0	0	0	0	1	0	0	0	0	1
12:30 PM	0	1	0	0	0	0	0	1	0	0	0	0	2
12:45 PM	0	1	0	0	0	0	0	0	0	0	0	0	1
Total	0	4	0	0	0	0	0	2	0	0	0	0	6
01:00 PM	0	0	0	0	0	0	0	1	0	0	0	0	1
01:15 PM	0	0	0	0	0	0	0	2	1	0	0	0	3
01:30 PM	0	2	0	0	0	0	1	1	0	0	0	0	4
01:45 PM	0	0	1	0	1	0	0	2	0	1	0	2	7
Total	0	2	1	0	1	0	1	6	1	1	0	2	15
03:00 PM	0	3	0	0	1	0	0	4	0	0	0	0	8
03:15 PM	0	3	1	0	0	0	0	3	0	0	1	0	8
03:30 PM	0	2	0	0	0	0	0	1	0	0	0	0	3
03:45 PM	0	2	0	0	0	0	0	3	0	0	0	0	5
Total	0	10	1	0	1	0	0	11	0	0	1	0	24
04:00 PM	0	2	0	0	0	0	0	0	0	0	0	0	2
04:15 PM	0	1	0	0	0	0	0	3	0	0	0	0	4
04:30 PM	1	1	0	0	0	0	0	1	0	0	0	0	3
Total	1	4	0	0	0	0	0	4	0	0	0	0	9
05:00 PM	0	0	0	0	0	0	0	1	0	0	0	0	1
05:15 PM	0	1	0	0	0	0	0	0	0	0	0	0	1
05:30 PM	0	1	1	0	0	0	0	1	0	0	0	1	4
05:45 PM	0	1	0	0	0	0	0	0	0	0	0	0	1
Total	0	3	1	0	0	0	0	2	0	0	0	1	7
Grand Total	2	42	4	1	3	0	5	43	4	1	1	6	112
Apprch %	4.2	87.5	8.3	25	75	0	9.6	82.7	7.7	12.5	12.5	75	
Total %	1.8	37.5	3.6	0.9	2.7	0	4.5	38.4	3.6	0.9	0.9	5.4	

CITY TRAFFIC COUNTERS

626.991.7522

www.ctcounters.com

File Name : LCBranford_Bus
Site Code : 00000000
Start Date : 1/14/2014
Page No : 2

	Laurel Canyon Blvd Southbound				Branford St Westbound				Laurel Canyon Blvd Northbound				Branford St Eastbound				
Start Time	Left	Thru	Right	App. Total	Left	Thru	Right	App. Total	Left	Thru	Right	App. Total	Left	Thru	Right	App. Total	Int. Total
Peak Hour Analysis From 07:00 AM to 09:45 AM - Peak 1 of 1																	
Peak Hour for Entire Intersection Begins at 07:00 AM																	
07:00 AM	**1**	2	0	3	0	**1**	0	**1**	**2**	**2**	0	**4**	0	0	**1**	**1**	**9**
07:15 AM	0	1	**1**	2	**1**	0	0	1	0	2	**1**	3	0	0	1	1	7
07:30 AM	0	2	0	2	0	0	0	0	0	2	0	2	0	0	1	1	5
07:45 AM	0	**4**	0	**4**	0	0	0	0	2	1	0	3	0	0	0	0	7
Total Volume	1	9	1	11	1	1	0	2	4	7	1	12	0	0	3	3	28
% App. Total	9.1	81.8	9.1		50	50	0		33.3	58.3	8.3		0	0	100		
PHF	.250	.563	.250	.688	.250	.250	.000	.500	.500	.875	.250	.750	.000	.000	.750	.750	.778

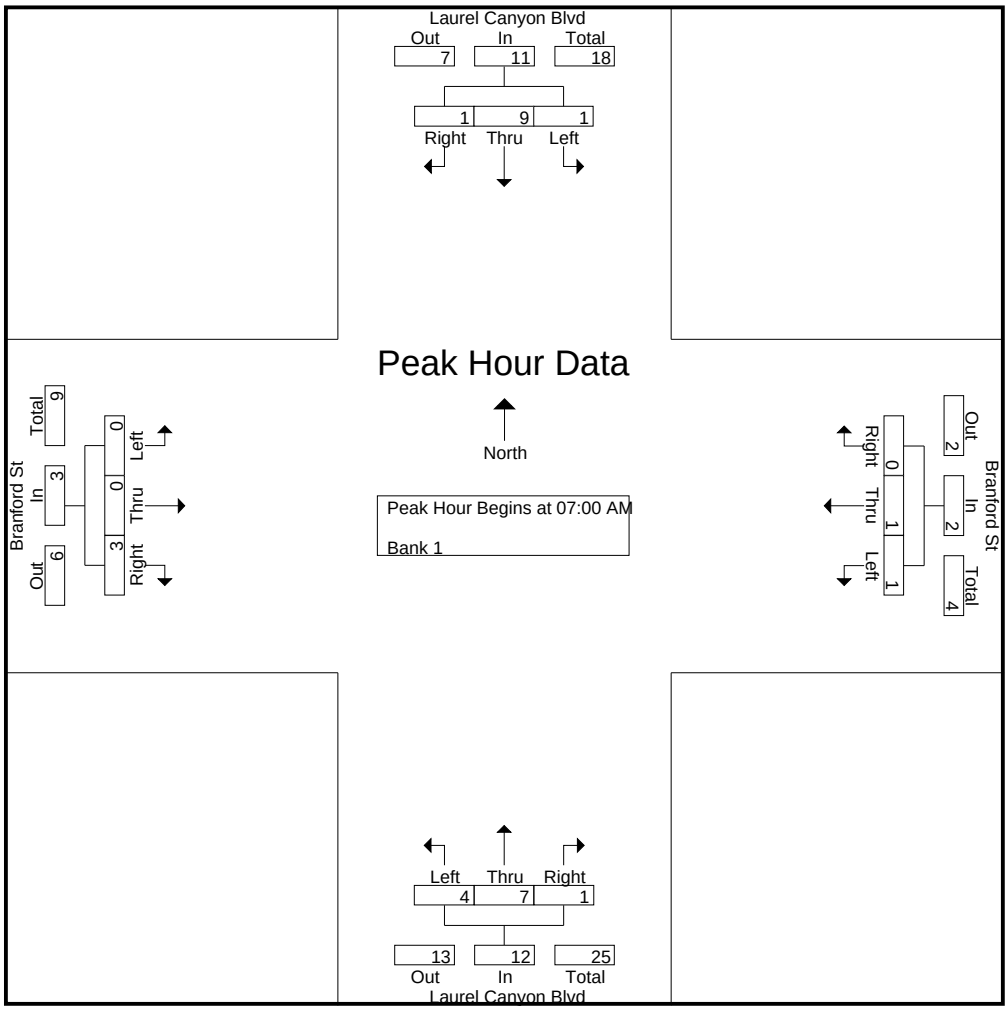

CITY TRAFFIC COUNTERS

626.991.7522

www.ctcounters.com

File Name : LCBranford_Bus
Site Code : 00000000
Start Date : 1/14/2014
Page No : 3

	Laurel Canyon Blvd Southbound				Branford St Westbound				Laurel Canyon Blvd Northbound				Branford St Eastbound				
Start Time	Left	Thru	Right	App. Total	Left	Thru	Right	App. Total	Left	Thru	Right	App. Total	Left	Thru	Right	App. Total	Int. Total
Peak Hour Analysis From 10:00 AM to 01:45 PM - Peak 1 of 1																	
Peak Hour for Entire Intersection Begins at 01:00 PM																	
01:00 PM	0	0	0	0	0	0	0	0	0	1	0	1	0	0	0	0	1
01:15 PM	0	0	0	0	0	0	0	0	0	**2**	**1**	**3**	0	0	0	0	3
01:30 PM	0	**2**	0	**2**	0	0	0	0	**1**	1	0	2	0	0	0	0	4
01:45 PM	0	0	**1**	1	0	**1**	0	**1**	0	2	0	2	**1**	0	**2**	**3**	**7**
Total Volume	0	2	1	3	0	1	0	1	1	6	1	8	1	0	2	3	15
% App. Total	0	66.7	33.3		0	100	0		12.5	75	12.5		33.3	0	66.7		
PHF	.000	.250	.250	.375	.000	.250	.000	.250	.250	.750	.250	.667	.250	.000	.250	.250	.536

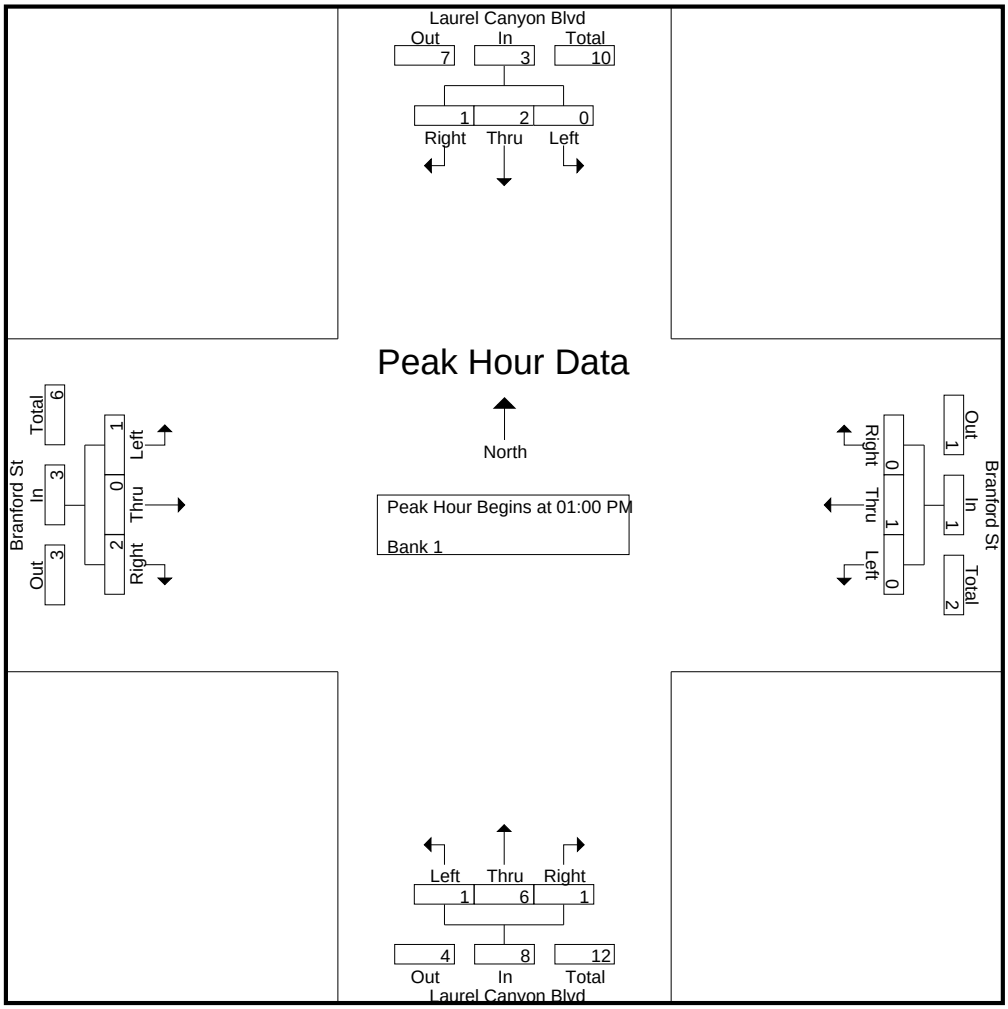

CITY TRAFFIC COUNTERS

626.991.7522

www.ctcounters.com

File Name : LCBranford_Bus
Site Code : 00000000
Start Date : 1/14/2014
Page No : 4

	Laurel Canyon Blvd Southbound				Branford St Westbound				Laurel Canyon Blvd Northbound				Branford St Eastbound				
Start Time	Left	Thru	Right	App. Total	Left	Thru	Right	App. Total	Left	Thru	Right	App. Total	Left	Thru	Right	App. Total	Int. Total
Peak Hour Analysis From 02:00 PM to 05:45 PM - Peak 1 of 1																	
Peak Hour for Entire Intersection Begins at 03:00 PM																	
03:00 PM	0	**3**	0	3	0	**1**	0	**1**	0	**4**	0	**4**	0	0	0	0	**8**
03:15 PM	0	3	**1**	**4**	0	0	0	0	0	3	0	3	0	**1**	0	**1**	8
03:30 PM	0	2	0	2	0	0	0	0	0	1	0	1	0	0	0	0	3
03:45 PM	0	2	0	2	0	0	0	0	0	3	0	3	0	0	0	0	5
Total Volume	0	10	1	11	0	1	0	1	0	11	0	11	0	1	0	1	24
% App. Total	0	90.9	9.1		0	100	0		0	100	0		0	100	0		
PHF	.000	.833	.250	.688	.000	.250	.000	.250	.000	.688	.000	.688	.000	.250	.000	.250	.750

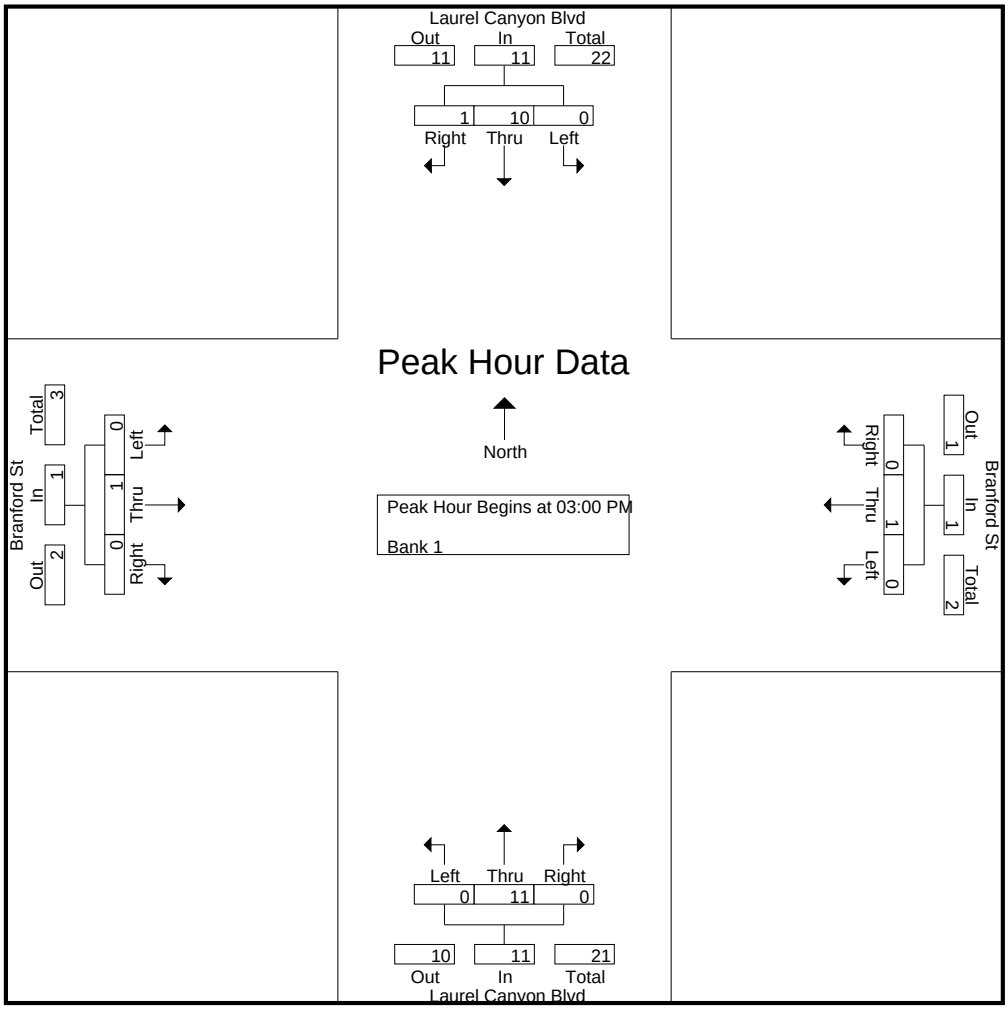

CITY TRAFFIC COUNTERS

626.991.7522

www.ctcounters.com

File Name : LCBranford_2Axle
Site Code : 00000000
Start Date : 1/14/2014
Page No : 1

Groups Printed- Unshifted

	Laurel Canyon Blvd Southbound			Branford St Westbound			Laurel Canyon Blvd Northbound			Branford St Eastbound			
Start Time	Left	Thru	Right	Left	Thru	Right	Left	Thru	Right	Left	Thru	Right	Int. Total
07:00 AM	1	2	1	0	1	0	0	3	1	0	2	0	11
07:15 AM	0	3	1	0	2	0	0	0	2	1	2	1	12
07:30 AM	0	8	1	1	2	0	0	1	0	1	0	0	14
07:45 AM	0	3	0	0	3	4	0	0	0	2	4	1	17
Total	1	16	3	1	8	4	0	4	3	4	8	2	54
08:00 AM	0	5	0	4	8	5	0	0	0	0	0	0	22
08:15 AM	0	3	1	4	10	10	0	0	0	0	1	1	30
08:30 AM	0	2	0	5	5	7	0	1	0	1	1	1	23
08:45 AM	0	2	0	2	4	5	0	0	1	2	0	0	16
Total	0	12	1	15	27	27	0	1	1	3	2	2	91
09:00 AM	1	6	0	4	4	4	0	3	2	1	1	2	28
09:15 AM	0	2	0	4	2	3	0	4	0	0	1	0	16
09:30 AM	2	0	1	1	1	0	0	0	2	1	1	1	10
09:45 AM	0	2	1	0	2	6	0	1	2	1	2	1	18
Total	3	10	2	9	9	13	0	8	6	3	5	4	72
12:00 PM	0	1	0	0	0	2	0	1	0	1	3	0	8
12:15 PM	3	1	1	2	5	1	0	1	1	0	1	0	16
12:30 PM	3	2	1	2	1	1	0	1	0	2	2	1	16
12:45 PM	1	0	1	0	4	2	0	1	0	0	2	1	12
Total	7	4	3	4	10	6	0	4	1	3	8	2	52
01:00 PM	0	1	2	2	2	1	1	1	1	1	2	1	15
01:15 PM	2	2	0	0	2	1	0	0	1	0	4	1	13
01:30 PM	1	2	0	3	2	2	0	2	2	2	0	0	16
01:45 PM	1	1	1	3	1	0	0	0	0	0	0	1	8
Total	4	6	3	8	7	4	1	3	4	3	6	3	52
03:00 PM	2	3	0	0	2	2	1	1	2	0	6	1	20
03:15 PM	3	1	0	3	4	0	0	2	1	0	6	0	20
03:30 PM	2	2	2	1	2	1	0	0	2	1	2	0	15
03:45 PM	0	1	0	1	2	0	0	0	0	0	4	0	8
Total	7	7	2	5	10	3	1	3	5	1	18	1	63
04:00 PM	1	1	0	0	1	0	1	1	2	0	8	0	15
04:15 PM	3	2	0	0	1	0	1	1	3	0	3	0	14
04:30 PM	3	2	2	0	1	0	0	0	1	0	1	1	11
04:45 PM	3	1	1	1	1	0	0	3	2	0	3	0	15
Total	10	6	3	1	4	0	2	5	8	0	15	1	55
05:00 PM	7	0	0	1	0	0	0	0	3	2	7	0	20
05:15 PM	3	1	0	0	0	1	0	0	1	1	2	0	9
05:30 PM	3	0	1	0	3	0	0	0	3	0	6	0	16
05:45 PM	4	1	0	0	0	0	0	1	1	0	3	1	11
Total	17	2	1	1	3	1	0	1	8	3	18	1	56
Grand Total	49	63	18	44	78	58	4	29	36	20	80	16	495
Apprch %	37.7	48.5	13.8	24.4	43.3	32.2	5.8	42	52.2	17.2	69	13.8	
Total %	9.9	12.7	3.6	8.9	15.8	11.7	0.8	5.9	7.3	4	16.2	3.2	

CITY TRAFFIC COUNTERS

626.991.7522

www.ctcounters.com

File Name : LCBranford_2Axle
Site Code : 00000000
Start Date : 1/14/2014
Page No : 2

	Laurel Canyon Blvd Southbound				Branford St Westbound				Laurel Canyon Blvd Northbound				Branford St Eastbound				
Start Time	Left	Thru	Right	App. Total	Left	Thru	Right	App. Total	Left	Thru	Right	App. Total	Left	Thru	Right	App. Total	Int. Total
Peak Hour Analysis From 07:00 AM to 11:45 AM - Peak 1 of 1																	
Peak Hour for Entire Intersection Begins at 08:15 AM																	
08:15 AM	0	3	**1**	4	4	**10**	**10**	**24**	0	0	0	0	0	**1**	1	2	**30**
08:30 AM	0	2	0	2	**5**	5	7	17	0	1	0	1	1	1	1	3	23
08:45 AM	0	2	0	2	2	4	5	11	0	0	1	1	**2**	0	0	2	16
09:00 AM	**1**	**6**	0	**7**	4	4	4	12	0	**3**	**2**	**5**	1	1	**2**	**4**	28
Total Volume	1	13	1	15	15	23	26	64	0	4	3	7	4	3	4	11	97
% App. Total	6.7	86.7	6.7		23.4	35.9	40.6		0	57.1	42.9		36.4	27.3	36.4		
PHF	.250	.542	.250	.536	.750	.575	.650	.667	.000	.333	.375	.350	.500	.750	.500	.688	.808

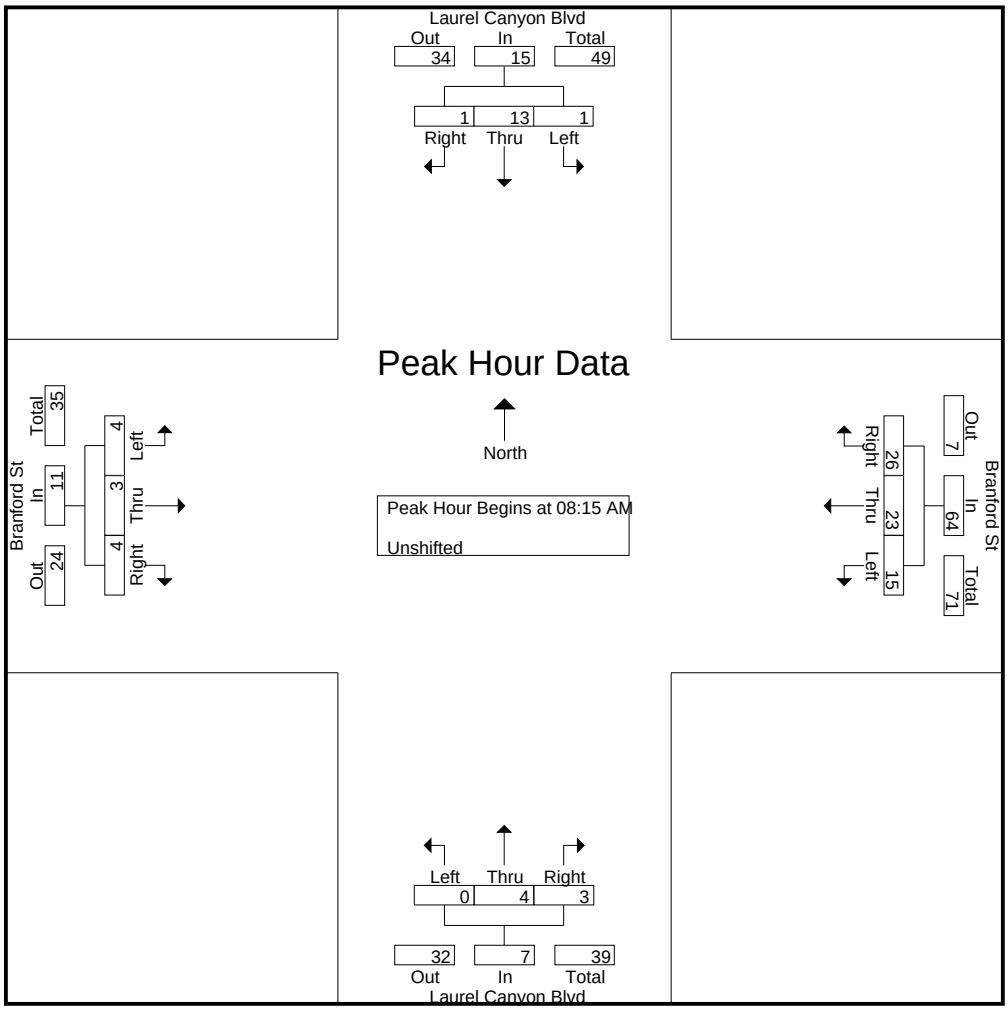

CITY TRAFFIC COUNTERS

626.991.7522

www.ctcounters.com

File Name : LCBranford_2Axle
Site Code : 00000000
Start Date : 1/14/2014
Page No : 3

	Laurel Canyon Blvd Southbound				Branford St Westbound				Laurel Canyon Blvd Northbound				Branford St Eastbound				
Start Time	Left	Thru	Right	App. Total	Left	Thru	Right	App. Total	Left	Thru	Right	App. Total	Left	Thru	Right	App. Total	Int. Total
Peak Hour Analysis From 12:00 PM to 05:45 PM - Peak 1 of 1																	
Peak Hour for Entire Intersection Begins at 03:00 PM																	
03:00 PM	2	**3**	0	5	0	2	**2**	4	**1**	1	**2**	**4**	0	**6**	**1**	**7**	**20**
03:15 PM	**3**	1	0	4	**3**	**4**	0	**7**	0	**2**	1	3	0	6	0	6	20
03:30 PM	2	2	**2**	**6**	1	2	1	4	0	0	2	2	**1**	2	0	3	15
03:45 PM	0	1	0	1	1	2	0	3	0	0	0	0	0	4	0	4	8
Total Volume	7	7	2	16	5	10	3	18	1	3	5	9	1	18	1	20	63
% App. Total	43.8	43.8	12.5		27.8	55.6	16.7		11.1	33.3	55.6		5	90	5		
PHF	.583	.583	.250	.667	.417	.625	.375	.643	.250	.375	.625	.563	.250	.750	.250	.714	.788

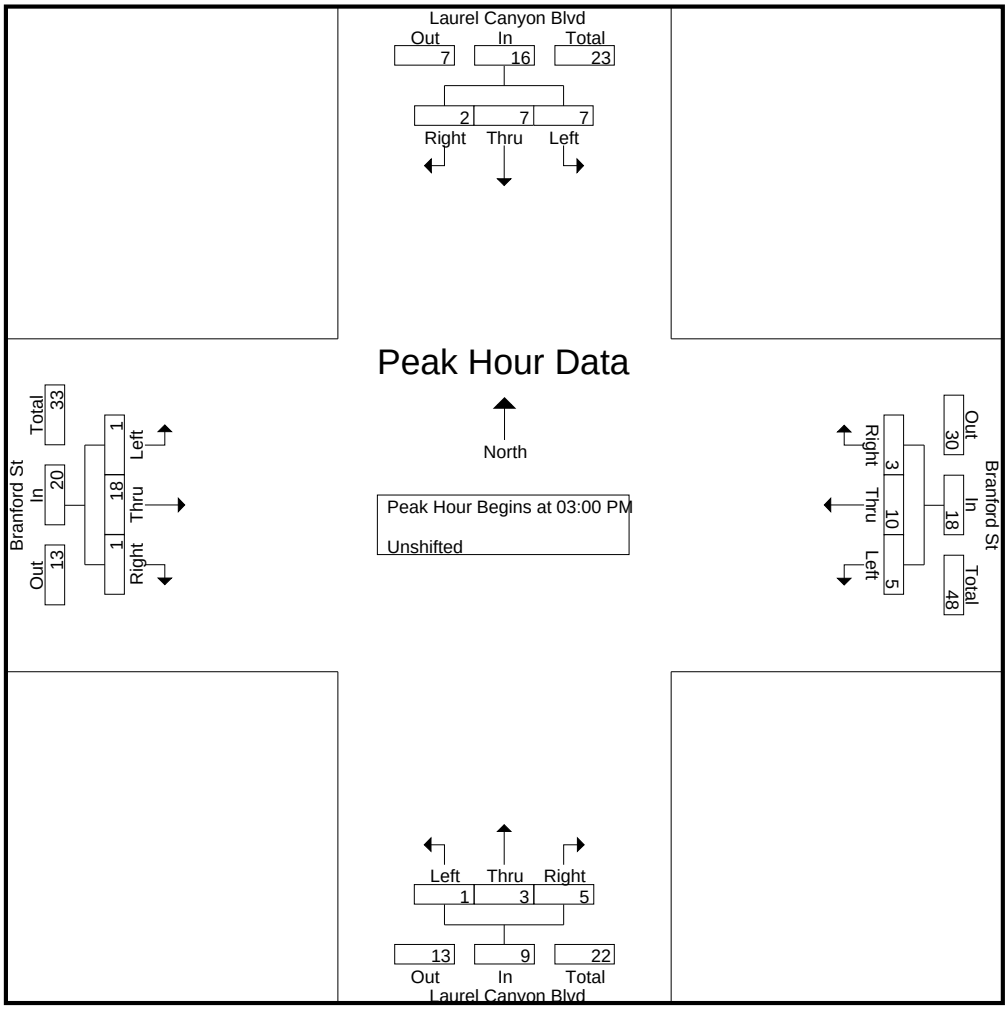

CITY TRAFFIC COUNTERS

626.991.7522

www.ctcounters.com

File Name : LCBranford_3Axle
Site Code : 00000000
Start Date : 1/14/2014
Page No : 1

Groups Printed- Bank 1

	Laurel Canyon Blvd Southbound			Branford St Westbound			Laurel Canyon Blvd Northbound			Branford St Eastbound			
Start Time	Left	Thru	Right	Left	Thru	Right	Left	Thru	Right	Left	Thru	Right	Int. Total
07:00 AM	0	0	1	0	0	0	0	1	0	0	0	0	2
07:15 AM	0	3	0	1	0	0	0	0	0	0	1	0	5
07:30 AM	0	0	0	1	0	1	0	0	0	0	2	0	4
07:45 AM	1	1	0	1	3	0	0	0	0	0	3	0	9
Total	1	4	1	3	3	1	0	1	0	0	6	0	20
08:00 AM	0	0	0	0	0	1	0	1	0	0	1	0	3
08:15 AM	1	2	0	1	3	1	0	1	1	0	0	1	11
08:30 AM	0	3	0	0	1	1	0	0	1	0	1	0	7
08:45 AM	0	3	0	0	0	1	0	0	0	0	0	0	4
Total	1	8	0	1	4	4	0	2	2	0	2	1	25
09:00 AM	4	1	0	1	2	0	0	2	0	0	3	0	13
09:15 AM	0	0	0	0	0	0	0	0	0	0	1	0	1
09:30 AM	0	0	0	2	1	0	0	1	1	0	0	0	5
09:45 AM	0	3	0	1	1	0	0	0	1	0	0	1	7
Total	4	4	0	4	4	0	0	3	2	0	4	1	26
12:00 PM	2	1	0	0	0	1	0	0	0	0	5	0	9
12:15 PM	2	0	0	0	3	1	0	0	0	0	0	0	6
12:30 PM	1	0	0	0	1	0	0	0	0	0	1	0	3
12:45 PM	1	3	0	0	0	1	0	1	0	0	3	0	9
Total	6	4	0	0	4	3	0	1	0	0	9	0	27
01:00 PM	2	1	0	0	0	0	0	0	0	0	1	0	4
01:15 PM	3	1	0	0	2	0	0	1	0	0	2	0	9
01:30 PM	0	0	0	0	0	4	0	0	0	0	0	0	4
01:45 PM	1	0	0	0	0	1	0	0	0	0	0	1	3
Total	6	2	0	0	2	5	0	1	0	0	3	1	20
03:00 PM	1	1	0	0	1	0	0	0	0	0	0	0	3
03:15 PM	3	0	0	0	0	1	0	0	1	0	1	0	6
03:30 PM	0	0	0	0	1	1	0	1	1	0	0	0	4
03:45 PM	0	0	0	0	0	1	0	0	0	0	1	0	2
Total	4	1	0	0	2	3	0	1	2	0	2	0	15
04:00 PM	2	1	0	0	0	0	0	0	0	0	1	0	4
04:15 PM	0	0	0	0	1	1	0	0	0	0	1	0	3
04:30 PM	1	0	0	0	1	0	0	0	0	0	1	0	3
04:45 PM	0	0	0	0	1	2	0	1	0	0	0	0	4
Total	3	1	0	0	3	3	0	1	0	0	3	0	14
05:00 PM	1	0	0	0	0	0	0	0	0	0	0	0	1
05:15 PM	1	0	0	0	0	0	0	0	1	0	0	0	2
05:30 PM	1	0	0	0	0	1	0	0	0	0	0	0	2
Total	3	0	0	0	0	1	0	0	1	0	0	0	5
Grand Total	28	24	1	8	22	20	0	10	7	0	29	3	152
Apprch %	52.8	45.3	1.9	16	44	40	0	58.8	41.2	0	90.6	9.4	
Total %	18.4	15.8	0.7	5.3	14.5	13.2	0	6.6	4.6	0	19.1	2	

CITY TRAFFIC COUNTERS

626.991.7522

www.ctcounters.com

File Name : LCBranford_3Axle
Site Code : 00000000
Start Date : 1/14/2014
Page No : 2

	Laurel Canyon Blvd Southbound				Branford St Westbound				Laurel Canyon Blvd Northbound				Branford St Eastbound				
Start Time	Left	Thru	Right	App. Total	Left	Thru	Right	App. Total	Left	Thru	Right	App. Total	Left	Thru	Right	App. Total	Int. Total
Peak Hour Analysis From 07:00 AM to 09:45 AM - Peak 1 of 1																	
Peak Hour for Entire Intersection Begins at 08:15 AM																	
08:15 AM	1	2	0	3	**1**	**3**	**1**	**5**	0	1	**1**	**2**	0	0	**1**	1	11
08:30 AM	0	**3**	0	3	0	1	1	2	0	0	1	1	0	1	0	1	7
08:45 AM	0	3	0	3	0	0	1	1	0	0	0	0	0	0	0	0	4
09:00 AM	**4**	1	0	**5**	1	2	0	3	0	**2**	0	2	0	**3**	0	**3**	**13**
Total Volume	5	9	0	14	2	6	3	11	0	3	2	5	0	4	1	5	35
% App. Total	35.7	64.3	0		18.2	54.5	27.3		0	60	40		0	80	20		
PHF	.313	.750	.000	.700	.500	.500	.750	.550	.000	.375	.500	.625	.000	.333	.250	.417	.673

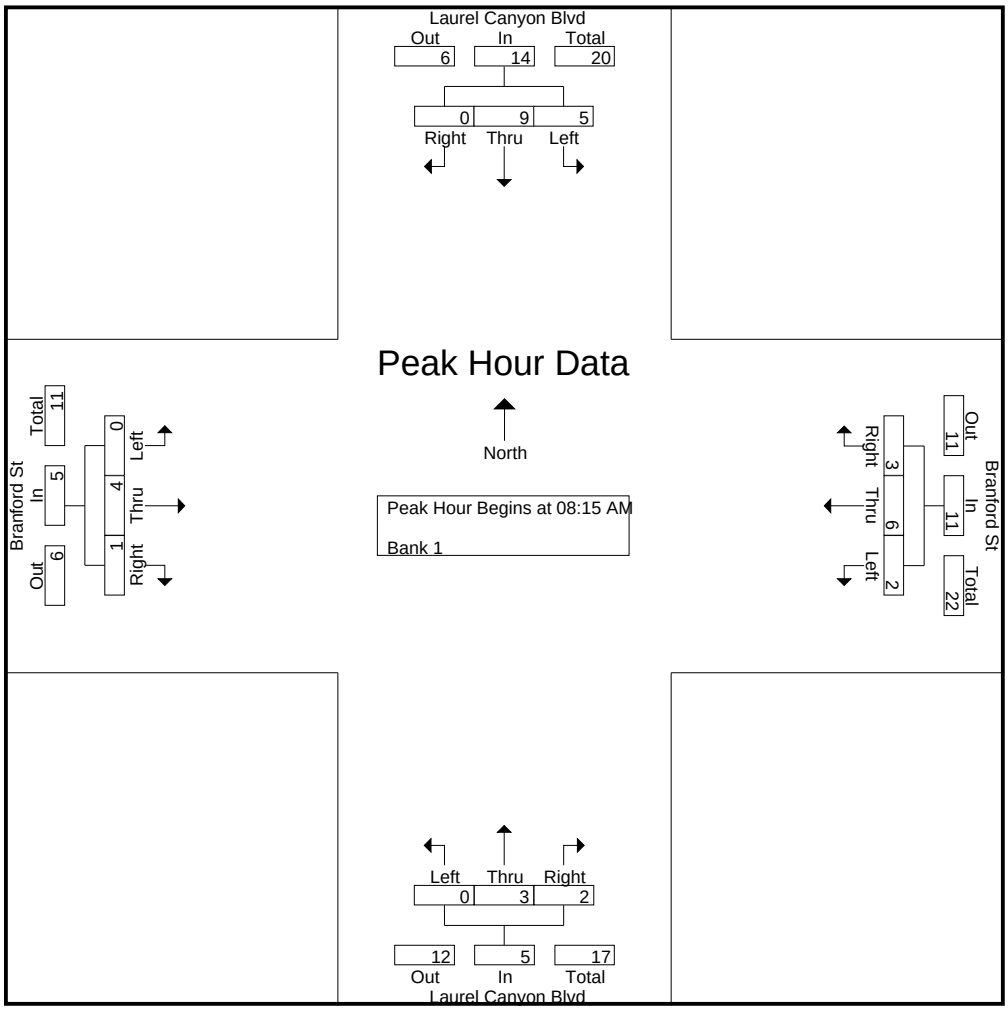

CITY TRAFFIC COUNTERS

626.991.7522

www.ctcounters.com

File Name : LCBranford_3Axle
Site Code : 00000000
Start Date : 1/14/2014
Page No : 3

	Laurel Canyon Blvd Southbound				Branford St Westbound				Laurel Canyon Blvd Northbound				Branford St Eastbound				
Start Time	Left	Thru	Right	App. Total	Left	Thru	Right	App. Total	Left	Thru	Right	App. Total	Left	Thru	Right	App. Total	Int. Total
Peak Hour Analysis From 10:00 AM to 01:45 PM - Peak 1 of 1																	
Peak Hour for Entire Intersection Begins at 12:00 PM																	
12:00 PM	**2**	1	0	3	0	0	**1**	1	0	0	0	0	0	**5**	0	**5**	**9**
12:15 PM	2	0	0	2	0	**3**	1	**4**	0	0	0	0	0	0	0	0	6
12:30 PM	1	0	0	1	0	1	0	1	0	0	0	0	0	1	0	1	3
12:45 PM	1	**3**	0	**4**	0	0	1	1	0	**1**	0	**1**	0	3	0	3	9
Total Volume	6	4	0	10	0	4	3	7	0	1	0	1	0	9	0	9	27
% App. Total	60	40	0		0	57.1	42.9		0	100	0		0	100	0		
PHF	.750	.333	.000	.625	.000	.333	.750	.438	.000	.250	.000	.250	.000	.450	.000	.450	.750

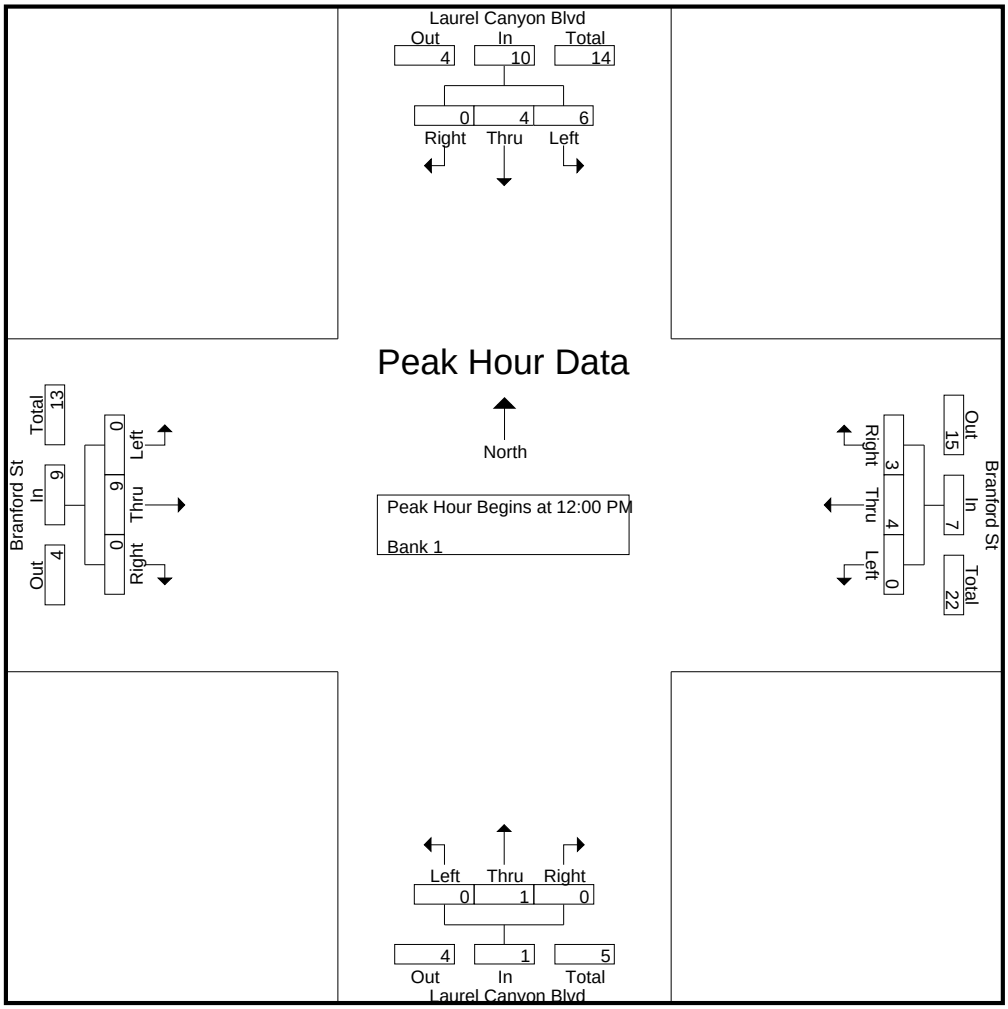

CITY TRAFFIC COUNTERS

626.991.7522

www.ctcounters.com

File Name : LCBranford_3Axle
Site Code : 00000000
Start Date : 1/14/2014
Page No : 4

	Laurel Canyon Blvd Southbound				Branford St Westbound				Laurel Canyon Blvd Northbound				Branford St Eastbound				
Start Time	Left	Thru	Right	App. Total	Left	Thru	Right	App. Total	Left	Thru	Right	App. Total	Left	Thru	Right	App. Total	Int. Total
Peak Hour Analysis From 02:00 PM to 05:45 PM - Peak 1 of 1																	
Peak Hour for Entire Intersection Begins at 03:15 PM																	
03:15 PM	**3**	0	0	**3**	0	0	**1**	1	0	0	**1**	1	0	**1**	0	**1**	**6**
03:30 PM	0	0	0	0	0	**1**	1	**2**	0	**1**	1	**2**	0	0	0	0	4
03:45 PM	0	0	0	0	0	0	1	1	0	0	0	0	0	1	0	1	2
04:00 PM	2	**1**	0	3	0	0	0	0	0	0	0	0	0	1	0	1	4
Total Volume	5	1	0	6	0	1	3	4	0	1	2	3	0	3	0	3	16
% App. Total	83.3	16.7	0		0	25	75		0	33.3	66.7		0	100	0		
PHF	.417	.250	.000	.500	.000	.250	.750	.500	.000	.250	.500	.375	.000	.750	.000	.750	.667

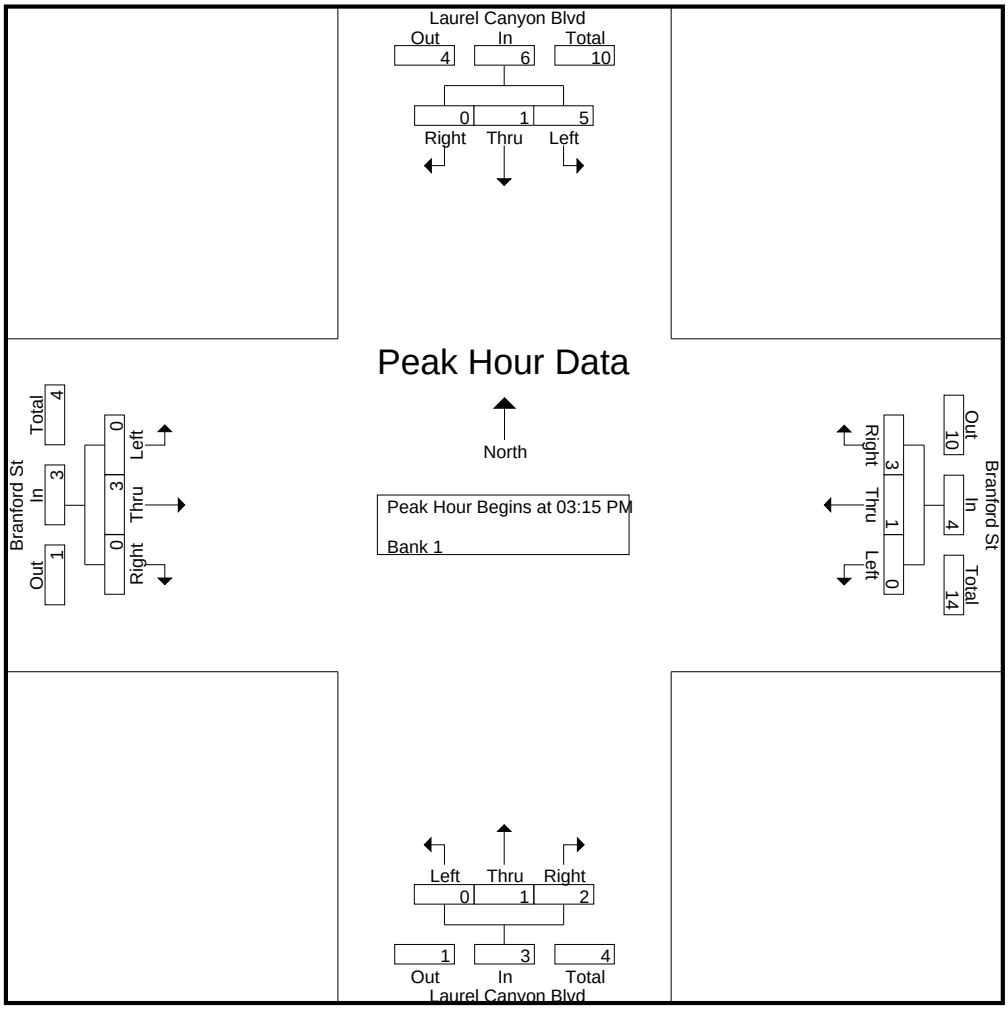

CITY TRAFFIC COUNTERS

626.991.7522

www.ctcounters.com

File Name : LCBranford_4Axle
Site Code : 00000000
Start Date : 1/14/2014
Page No : 1

Groups Printed- Bank 2

	Laurel Canyon Blvd Southbound			Branford St Westbound			Laurel Canyon Blvd Northbound			Branford St Eastbound			
Start Time	Left	Thru	Right	Left	Thru	Right	Left	Thru	Right	Left	Thru	Right	Int. Total
07:15 AM	0	0	0	0	0	1	0	0	0	0	0	0	1
07:30 AM	0	0	0	0	0	0	0	1	0	0	0	0	1
Total	0	0	0	0	0	1	0	1	0	0	0	0	2
08:15 AM	0	0	0	0	0	1	0	0	0	0	0	0	1
08:30 AM	0	0	0	0	1	0	0	0	0	0	0	0	1
08:45 AM	1	0	0	0	2	0	0	0	0	0	0	0	3
Total	1	0	0	0	3	1	0	0	0	0	0	0	5
09:00 AM	0	0	0	0	1	1	0	0	0	0	0	0	2
09:15 AM	0	0	0	0	0	2	0	1	0	0	0	0	3
09:30 AM	0	1	0	0	0	0	0	0	0	0	0	0	1
09:45 AM	0	0	0	0	0	0	0	0	0	0	1	0	1
Total	0	1	0	0	1	3	0	1	0	0	1	0	7
12:00 PM	0	0	0	0	1	1	0	0	0	0	0	0	2
12:15 PM	1	0	0	0	0	3	0	0	0	0	0	0	4
12:30 PM	0	0	0	0	0	1	0	0	0	0	0	0	1
12:45 PM	0	0	0	0	0	3	0	0	0	0	0	0	3
Total	1	0	0	0	1	8	0	0	0	0	0	0	10
01:00 PM	0	0	0	0	1	0	0	0	0	0	0	0	1
01:15 PM	0	0	0	1	1	0	0	0	0	0	0	0	2
Total	0	0	0	1	2	0	0	0	0	0	0	0	3
03:00 PM	1	0	0	0	0	0	0	0	0	0	0	0	1
03:15 PM	1	0	0	0	0	0	1	1	0	0	0	0	3
03:30 PM	0	0	0	0	0	1	0	0	0	0	0	0	1
Total	2	0	0	0	0	1	1	1	0	0	0	0	5
04:00 PM	0	1	0	0	0	0	0	0	1	0	1	0	3
04:15 PM	1	0	0	0	0	0	0	0	0	0	0	0	1
Total	1	1	0	0	0	0	0	0	1	0	1	0	4
05:00 PM	0	0	0	0	1	0	0	0	0	0	1	0	2
05:15 PM	0	0	0	0	0	1	0	0	0	0	0	0	1
Total	0	0	0	0	1	1	0	0	0	0	1	0	3
Grand Total	5	2	0	1	8	15	1	3	1	0	3	0	39
Apprch %	71.4	28.6	0	4.2	33.3	62.5	20	60	20	0	100	0	
Total %	12.8	5.1	0	2.6	20.5	38.5	2.6	7.7	2.6	0	7.7	0	

CITY TRAFFIC COUNTERS

626.991.7522

www.ctcounters.com

File Name : LCBranford_4Axle
Site Code : 00000000
Start Date : 1/14/2014
Page No : 2

	Laurel Canyon Blvd Southbound				Branford St Westbound				Laurel Canyon Blvd Northbound				Branford St Eastbound				
Start Time	Left	Thru	Right	App. Total	Left	Thru	Right	App. Total	Left	Thru	Right	App. Total	Left	Thru	Right	App. Total	Int. Total
Peak Hour Analysis From 07:00 AM to 09:45 AM - Peak 1 of 1																	
Peak Hour for Entire Intersection Begins at 08:30 AM																	
08:30 AM	0	0	0	0	0	1	0	1	0	0	0	0	0	0	0	0	1
08:45 AM	**1**	0	0	**1**	0	**2**	0	**2**	0	0	0	0	0	0	0	0	**3**
09:00 AM	0	0	0	0	0	1	1	2	0	0	0	0	0	0	0	0	2
09:15 AM	0	0	0	0	0	0	**2**	2	0	**1**	0	**1**	0	0	0	0	3
Total Volume	1	0	0	1	0	4	3	7	0	1	0	1	0	0	0	0	9
% App. Total	100	0	0		0	57.1	42.9		0	100	0		0	0	0		
PHF	.250	.000	.000	.250	.000	.500	.375	.875	.000	.250	.000	.250	.000	.000	.000	.000	.750

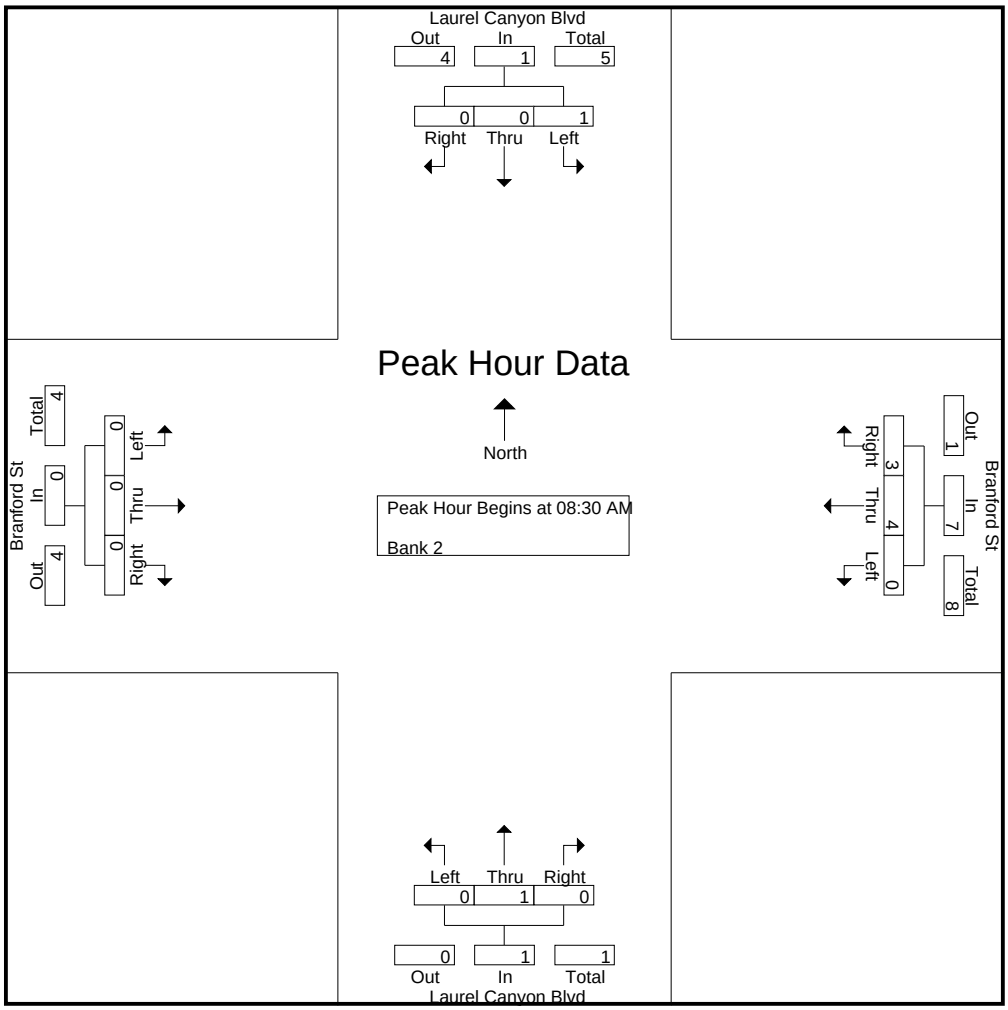

CITY TRAFFIC COUNTERS

626.991.7522

www.ctcounters.com

File Name : LCBranford_4Axle
Site Code : 00000000
Start Date : 1/14/2014
Page No : 3

	Laurel Canyon Blvd Southbound				Branford St Westbound				Laurel Canyon Blvd Northbound				Branford St Eastbound				
Start Time	Left	Thru	Right	App. Total	Left	Thru	Right	App. Total	Left	Thru	Right	App. Total	Left	Thru	Right	App. Total	Int. Total
Peak Hour Analysis From 10:00 AM to 01:45 PM - Peak 1 of 1																	
Peak Hour for Entire Intersection Begins at 12:00 PM																	
12:00 PM	0	0	0	0	0	**1**	1	2	0	0	0	0	0	0	0	0	2
12:15 PM	**1**	0	0	**1**	0	0	**3**	**3**	0	0	0	0	0	0	0	0	**4**
12:30 PM	0	0	0	0	0	0	1	1	0	0	0	0	0	0	0	0	1
12:45 PM	0	0	0	0	0	0	3	3	0	0	0	0	0	0	0	0	3
Total Volume	1	0	0	1	0	1	8	9	0	0	0	0	0	0	0	0	10
% App. Total	100	0	0		0	11.1	88.9		0	0	0		0	0	0		
PHF	.250	.000	.000	.250	.000	.250	.667	.750	.000	.000	.000	.000	.000	.000	.000	.000	.625

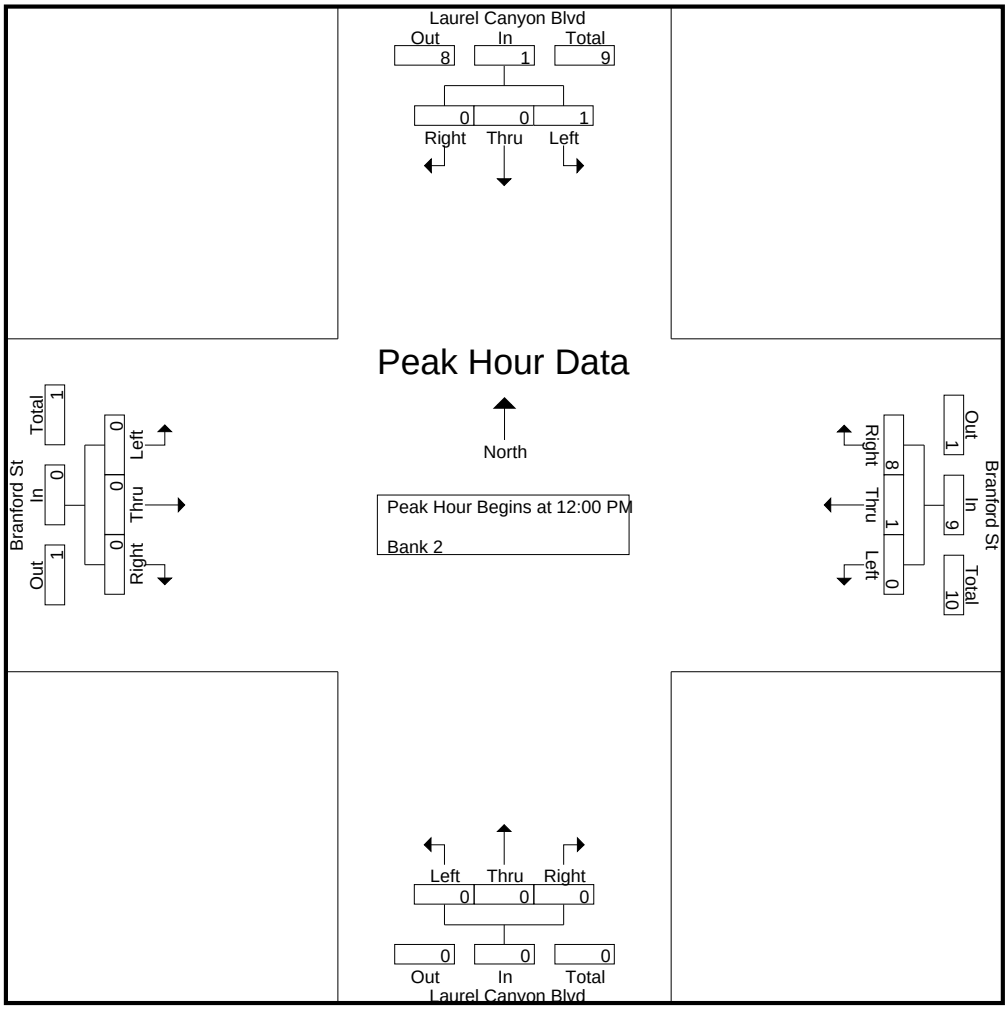

CITY TRAFFIC COUNTERS

626.991.7522

www.ctcounters.com

File Name : LCBranford_4Axle
Site Code : 00000000
Start Date : 1/14/2014
Page No : 4

	Laurel Canyon Blvd Southbound				Branford St Westbound				Laurel Canyon Blvd Northbound				Branford St Eastbound				
Start Time	Left	Thru	Right	App. Total	Left	Thru	Right	App. Total	Left	Thru	Right	App. Total	Left	Thru	Right	App. Total	Int. Total
Peak Hour Analysis From 02:00 PM to 05:45 PM - Peak 1 of 1																	
Peak Hour for Entire Intersection Begins at 03:15 PM																	
03:15 PM	**1**	0	0	**1**	0	0	0	0	**1**	**1**	0	**2**	0	0	0	0	**3**
03:30 PM	0	0	0	0	0	0	**1**	**1**	0	0	0	0	0	0	0	0	1
03:45 PM	0	0	0	0	0	0	0	0	0	0	0	0	0	0	0	0	0
04:00 PM	0	**1**	0	1	0	0	0	0	0	0	**1**	1	0	**1**	0	**1**	3
Total Volume	1	1	0	2	0	0	1	1	1	1	1	3	0	1	0	1	7
% App. Total	50	50	0		0	0	100		33.3	33.3	33.3		0	100	0		
PHF	.250	.250	.000	.500	.000	.000	.250	.250	.250	.250	.250	.375	.000	.250	.000	.250	.583

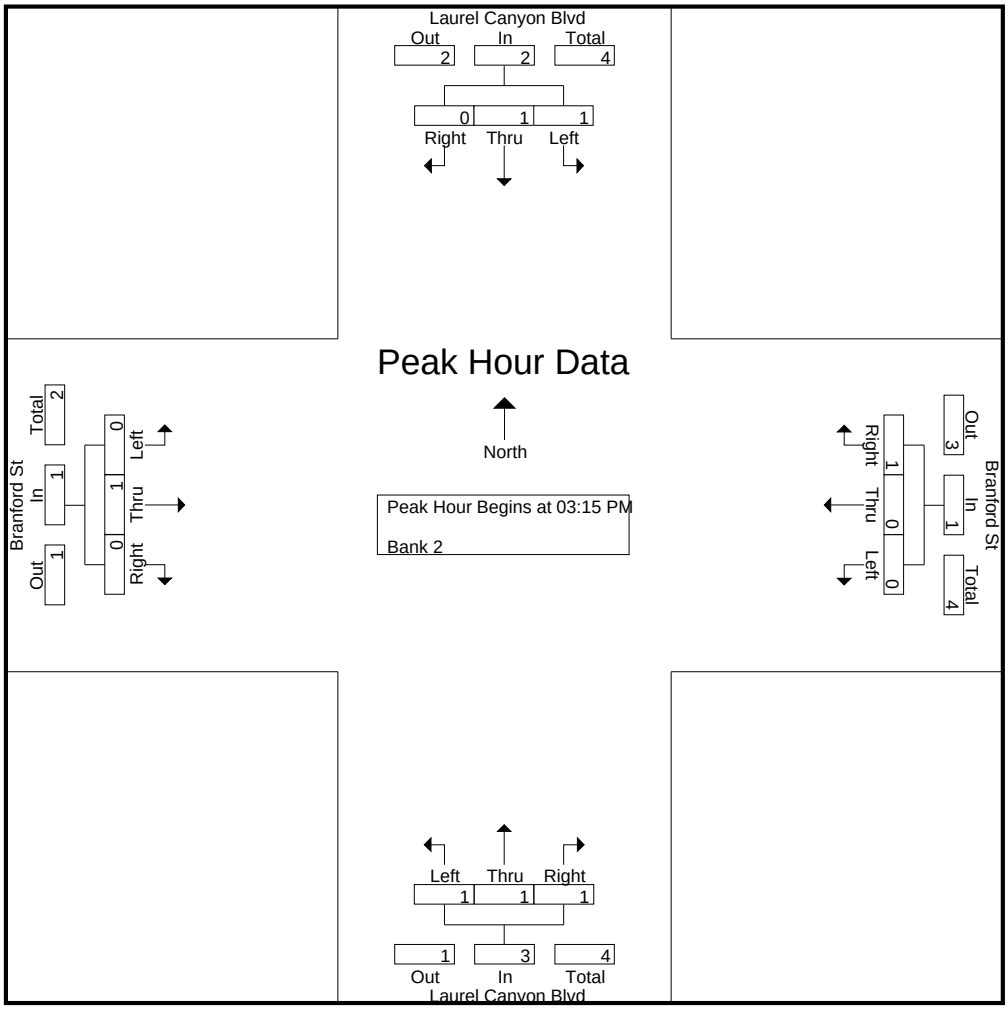

CITY TRAFFIC COUNTERS

626.991.7522

www.ctcounters.com

File Name : LCBranford_5Axle
Site Code : 00000000
Start Date : 1/14/2014
Page No : 1

Groups Printed- Bank 2

	Laurel Canyon Blvd Southbound			Branford St Westbound			Laurel Canyon Blvd Northbound			Branford St Eastbound			
Start Time	Left	Thru	Right	Left	Thru	Right	Left	Thru	Right	Left	Thru	Right	Int. Total
07:00 AM	0	0	0	0	0	0	0	1	1	0	0	0	2
07:15 AM	2	2	0	0	0	1	0	0	0	0	0	0	5
07:30 AM	1	0	0	0	0	0	0	1	0	0	0	0	2
07:45 AM	0	1	0	0	1	0	0	0	0	0	0	1	3
Total	3	3	0	0	1	1	0	2	1	0	0	1	12
08:00 AM	0	2	0	0	0	0	0	0	0	0	0	0	2
08:15 AM	0	3	0	0	0	0	0	1	1	0	0	0	5
08:30 AM	0	3	0	0	0	2	0	0	1	0	1	1	8
08:45 AM	3	4	1	0	0	0	1	1	0	0	1	0	11
Total	3	12	1	0	0	2	1	2	2	0	2	1	26
09:00 AM	0	3	0	1	0	0	0	1	0	0	3	0	8
09:15 AM	1	0	0	0	1	0	0	0	0	0	1	0	3
09:30 AM	1	2	0	1	0	0	0	0	1	1	0	0	6
09:45 AM	0	0	0	1	0	0	0	1	0	0	0	0	2
Total	2	5	0	3	1	0	0	2	1	1	4	0	19
12:00 PM	2	1	0	0	1	0	0	1	2	0	0	0	7
12:15 PM	1	0	0	0	0	0	0	0	0	0	1	0	2
12:30 PM	0	0	0	0	0	0	0	0	0	0	0	1	1
12:45 PM	0	1	0	1	0	1	0	0	1	0	0	0	4
Total	3	2	0	1	1	1	0	1	3	0	1	1	14
01:00 PM	1	0	0	0	0	0	0	0	0	0	1	0	2
01:15 PM	0	0	0	2	0	0	0	0	0	0	0	0	2
01:30 PM	0	0	0	0	0	0	0	0	1	1	1	0	3
01:45 PM	0	0	0	1	0	0	0	0	0	2	0	1	4
Total	1	0	0	3	0	0	0	0	1	3	2	1	11
03:00 PM	3	1	0	0	0	0	0	0	0	0	0	0	4
03:15 PM	1	0	0	1	0	0	0	2	0	0	0	0	4
03:30 PM	1	0	0	0	0	0	0	0	0	0	0	0	1
03:45 PM	0	0	0	0	0	0	0	0	0	0	1	0	1
Total	5	1	0	1	0	0	0	2	0	0	1	0	10
04:00 PM	0	1	0	0	0	0	0	0	0	0	0	0	1
04:30 PM	1	0	0	0	0	0	0	2	1	0	0	0	4
04:45 PM	1	0	0	0	0	0	0	0	0	0	0	0	1
Total	2	1	0	0	0	0	0	2	1	0	0	0	6
05:00 PM	0	0	0	0	0	0	1	0	0	0	0	0	1
05:15 PM	0	0	0	0	0	0	0	0	0	1	0	0	1
05:30 PM	0	0	0	2	0	0	0	0	0	0	0	0	2
Total	0	0	0	2	0	0	1	0	0	1	0	0	4
Grand Total	19	24	1	10	3	4	2	11	9	5	10	4	102
Apprch %	43.2	54.5	2.3	58.8	17.6	23.5	9.1	50	40.9	26.3	52.6	21.1	
Total %	18.6	23.5	1	9.8	2.9	3.9	2	10.8	8.8	4.9	9.8	3.9	

CITY TRAFFIC COUNTERS

626.991.7522

www.ctcounters.com

File Name : LCBranford_5Axle
Site Code : 00000000
Start Date : 1/14/2014
Page No : 2

	Laurel Canyon Blvd Southbound				Branford St Westbound				Laurel Canyon Blvd Northbound				Branford St Eastbound				
Start Time	Left	Thru	Right	App. Total	Left	Thru	Right	App. Total	Left	Thru	Right	App. Total	Left	Thru	Right	App. Total	Int. Total
Peak Hour Analysis From 07:00 AM to 09:45 AM - Peak 1 of 1																	
Peak Hour for Entire Intersection Begins at 08:15 AM																	
08:15 AM	0	3	0	3	0	0	0	0	0	**1**	**1**	**2**	0	0	0	0	5
08:30 AM	0	3	0	3	0	0	**2**	**2**	0	0	1	1	0	1	**1**	2	8
08:45 AM	**3**	**4**	**1**	**8**	0	0	0	0	**1**	1	0	2	0	1	0	1	**11**
09:00 AM	0	3	0	3	**1**	0	0	1	0	1	0	1	0	**3**	0	**3**	8
Total Volume	3	13	1	17	1	0	2	3	1	3	2	6	0	5	1	6	32
% App. Total	17.6	76.5	5.9		33.3	0	66.7		16.7	50	33.3		0	83.3	16.7		
PHF	.250	.813	.250	.531	.250	.000	.250	.375	.250	.750	.500	.750	.000	.417	.250	.500	.727

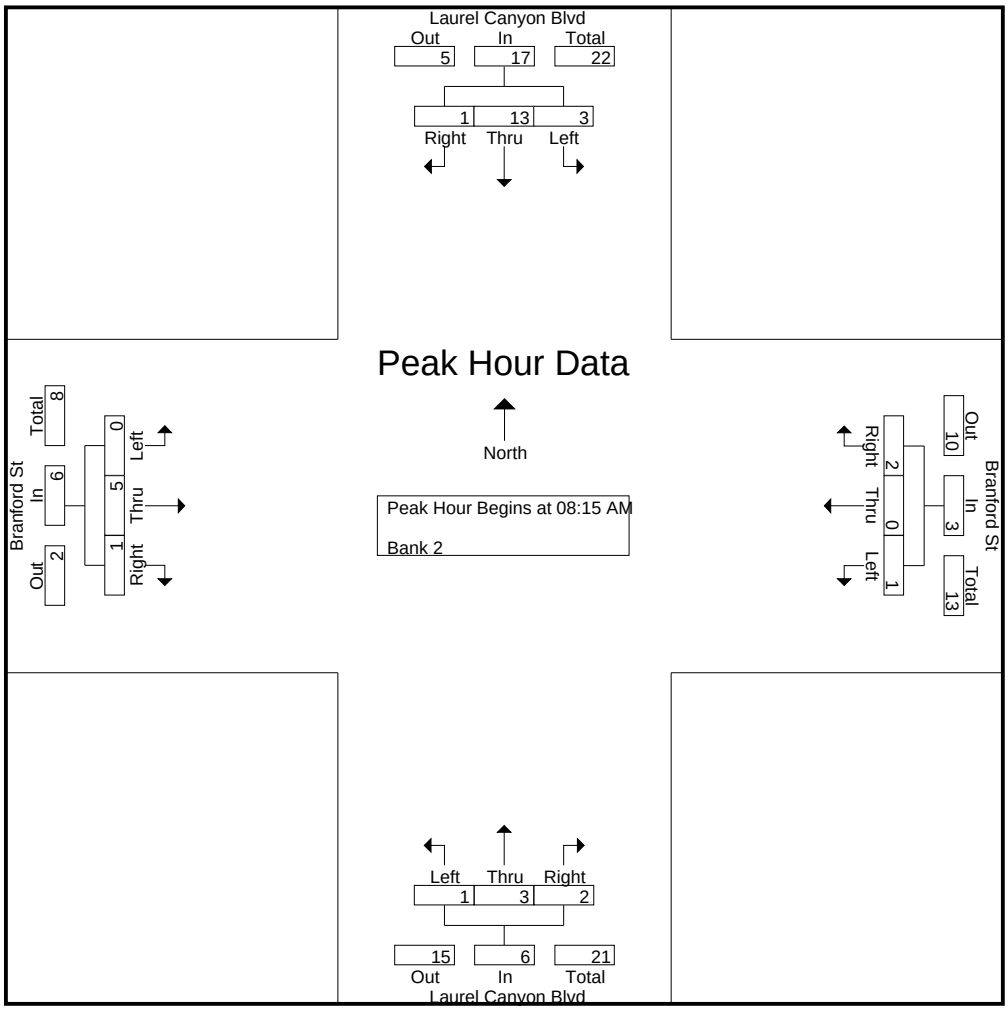

CITY TRAFFIC COUNTERS

626.991.7522

www.ctcounters.com

File Name : LCBranford_5Axle
Site Code : 00000000
Start Date : 1/14/2014
Page No : 3

	Laurel Canyon Blvd Southbound				Branford St Westbound				Laurel Canyon Blvd Northbound				Branford St Eastbound				
Start Time	Left	Thru	Right	App. Total	Left	Thru	Right	App. Total	Left	Thru	Right	App. Total	Left	Thru	Right	App. Total	Int. Total
Peak Hour Analysis From 10:00 AM to 01:45 PM - Peak 1 of 1																	
Peak Hour for Entire Intersection Begins at 12:00 PM																	
12:00 PM	**2**	**1**	0	**3**	0	**1**	0	1	0	**1**	**2**	**3**	0	0	0	0	**7**
12:15 PM	1	0	0	1	0	0	0	0	0	0	0	0	0	**1**	0	**1**	2
12:30 PM	0	0	0	0	0	0	0	0	0	0	0	0	0	0	**1**	1	1
12:45 PM	0	1	0	1	**1**	0	**1**	**2**	0	0	1	1	0	0	0	0	4
Total Volume	3	2	0	5	1	1	1	3	0	1	3	4	0	1	1	2	14
% App. Total	60	40	0		33.3	33.3	33.3		0	25	75		0	50	50		
PHF	.375	.500	.000	.417	.250	.250	.250	.375	.000	.250	.375	.333	.000	.250	.250	.500	.500

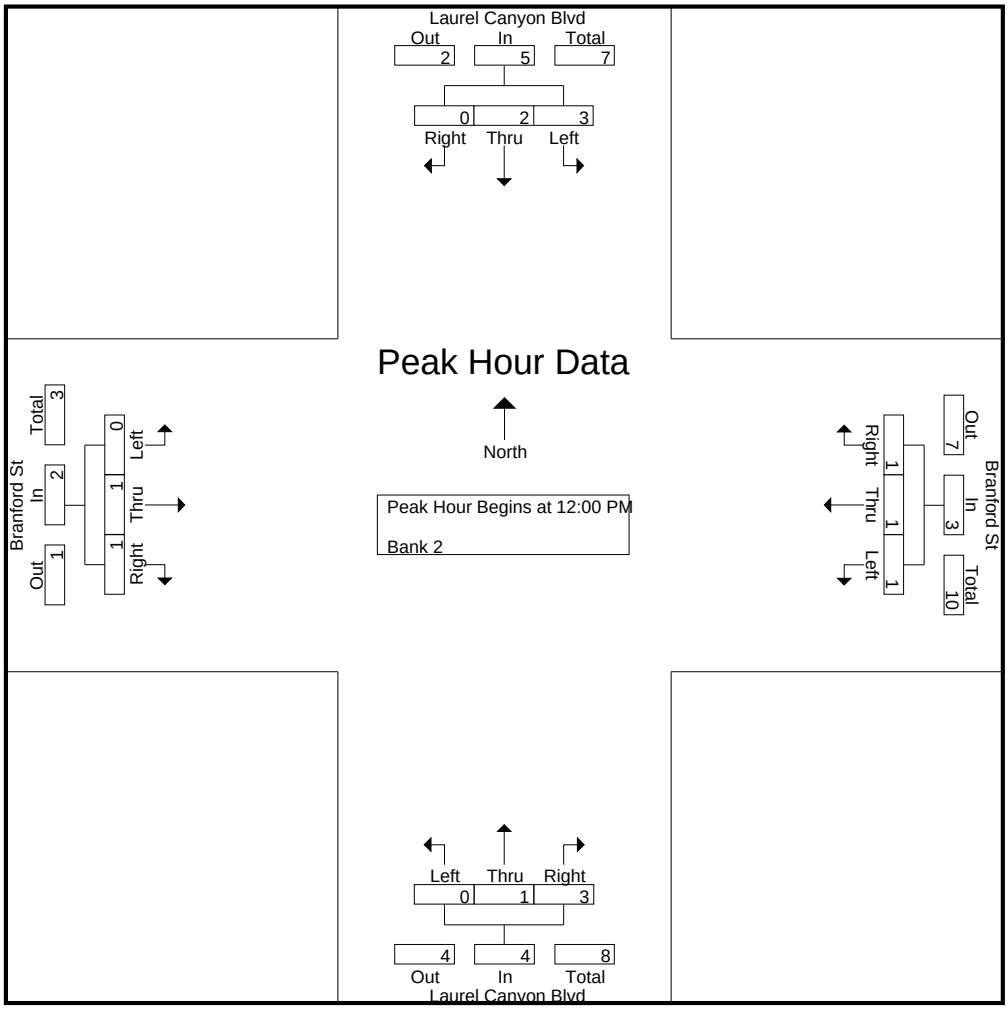

CITY TRAFFIC COUNTERS

626.991.7522

www.ctcounters.com

File Name : LCBranford_5Axle
Site Code : 00000000
Start Date : 1/14/2014
Page No : 4

	Laurel Canyon Blvd Southbound				Branford St Westbound				Laurel Canyon Blvd Northbound				Branford St Eastbound				
Start Time	Left	Thru	Right	App. Total	Left	Thru	Right	App. Total	Left	Thru	Right	App. Total	Left	Thru	Right	App. Total	Int. Total
Peak Hour Analysis From 02:00 PM to 05:45 PM - Peak 1 of 1																	
Peak Hour for Entire Intersection Begins at 03:00 PM																	
03:00 PM	**3**	**1**	0	**4**	0	0	0	0	0	0	0	0	0	0	0	0	**4**
03:15 PM	1	0	0	1	**1**	0	0	**1**	0	**2**	0	**2**	0	0	0	0	4
03:30 PM	1	0	0	1	0	0	0	0	0	0	0	0	0	0	0	0	1
03:45 PM	0	0	0	0	0	0	0	0	0	0	0	0	0	**1**	0	**1**	1
Total Volume	5	1	0	6	1	0	0	1	0	2	0	2	0	1	0	1	10
% App. Total	83.3	16.7	0		100	0	0		0	100	0		0	100	0		
PHF	.417	.250	.000	.375	.250	.000	.000	.250	.000	.250	.000	.250	.000	.250	.000	.250	.625

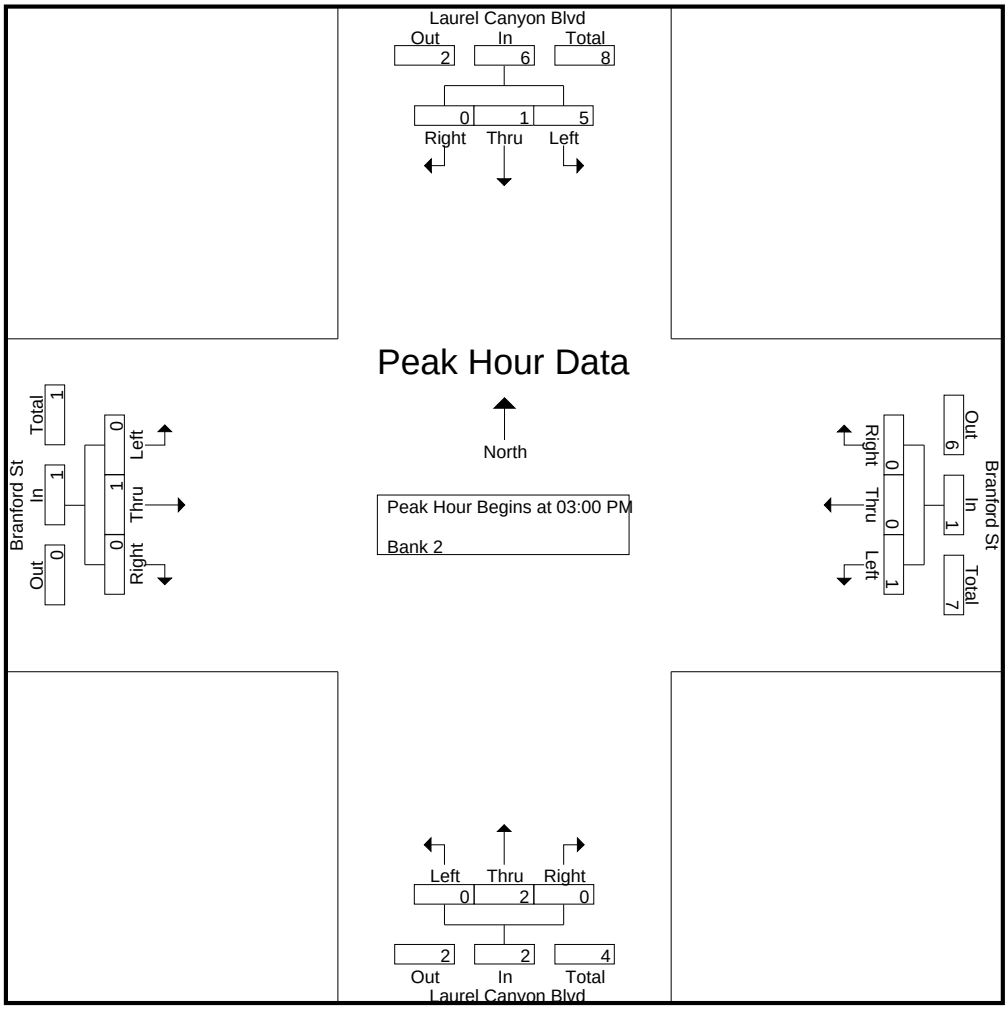

CITY TRAFFIC COUNTERS

626.991.7522

www.ctcounters.com

File Name : SanFBranford
Site Code : 00000000
Start Date : 1/14/2014
Page No : 1

Groups Printed- Unshifted

	San Fernando Rd Southbound			Branford St Westbound			San Fernando Rd Northbound			Branford St Eastbound			
Start Time	Left	Thru	Right	Left	Thru	Right	Left	Thru	Right	Left	Thru	Right	Int. Total
07:00 AM	7	143	30	14	39	1	13	49	21	3	46	13	379
07:15 AM	10	193	26	21	59	7	20	68	22	5	51	29	511
07:30 AM	5	172	22	24	48	2	17	77	27	17	88	42	541
07:45 AM	16	185	22	17	45	7	19	65	39	8	112	24	559
Total	38	693	100	76	191	17	69	259	109	33	297	108	1990
08:00 AM	11	166	23	12	36	5	10	61	22	8	86	37	477
08:15 AM	11	170	14	8	27	8	14	58	18	9	63	12	412
08:30 AM	9	156	12	10	21	6	9	55	10	2	38	13	341
08:45 AM	12	110	13	9	34	5	9	46	9	5	40	14	306
Total	43	602	62	39	118	24	42	220	59	24	227	76	1536
09:00 AM	7	105	7	12	16	7	10	36	12	6	35	11	264
09:15 AM	11	66	12	6	26	10	12	34	13	5	26	11	232
09:30 AM	14	52	11	7	29	8	8	47	9	10	36	15	246
09:45 AM	12	55	14	6	29	4	9	48	20	13	42	9	261
Total	44	278	44	31	100	29	39	165	54	34	139	46	1003
12:00 PM	12	85	10	17	39	11	6	70	25	10	47	8	340
12:15 PM	13	71	8	10	33	7	9	69	15	8	39	14	296
12:30 PM	14	82	7	20	32	6	10	63	19	12	39	11	315
12:45 PM	14	70	18	15	46	11	13	72	19	12	30	10	330
Total	53	308	43	62	150	35	38	274	78	42	155	43	1281
01:00 PM	11	62	10	14	37	20	9	81	16	4	32	18	314
01:15 PM	9	78	13	24	45	18	10	65	27	10	47	15	361
01:30 PM	11	82	25	27	49	5	12	79	39	10	46	12	397
01:45 PM	16	81	12	9	28	13	9	91	24	8	31	22	344
Total	47	303	60	74	159	56	40	316	106	32	156	67	1416
03:00 PM	9	60	10	14	45	13	17	92	18	7	60	13	358
03:15 PM	14	42	10	24	64	12	11	78	23	10	64	18	370
03:30 PM	6	74	21	24	69	32	22	115	26	13	47	5	454
03:45 PM	13	72	12	15	33	9	20	139	26	8	65	7	419
Total	42	248	53	77	211	66	70	424	93	38	236	43	1601
04:00 PM	11	72	18	16	51	14	12	101	17	16	51	19	398
04:15 PM	4	78	12	16	50	20	24	113	26	7	59	15	424
04:30 PM	10	79	10	27	75	9	14	154	27	14	39	8	466
04:45 PM	6	83	14	21	64	9	24	145	19	9	59	19	472
Total	31	312	54	80	240	52	74	513	89	46	208	61	1760
05:00 PM	8	69	31	15	70	11	9	127	11	15	38	9	413
05:15 PM	5	84	16	13	68	17	24	137	22	12	38	13	449
05:30 PM	3	74	17	25	60	7	21	106	24	14	55	11	417
05:45 PM	6	68	18	14	40	8	15	139	11	10	42	8	379
Total	22	295	82	67	238	43	69	509	68	51	173	41	1658
Grand Total	320	3039	498	506	1407	322	441	2680	656	300	1591	485	12245
Apprch %	8.3	78.8	12.9	22.6	63	14.4	11.7	71	17.4	12.6	67	20.4	
Total %	2.6	24.8	4.1	4.1	11.5	2.6	3.6	21.9	5.4	2.4	13	4	

CITY TRAFFIC COUNTERS

626.991.7522

www.ctcounters.com

File Name : SanFBranford
Site Code : 00000000
Start Date : 1/14/2014
Page No : 2

	San Fernando Rd Southbound				Branford St Westbound				San Fernando Rd Northbound				Branford St Eastbound				
Start Time	Left	Thru	Right	App. Total	Left	Thru	Right	App. Total	Left	Thru	Right	App. Total	Left	Thru	Right	App. Total	Int. Total
Peak Hour Analysis From 07:00 AM to 09:45 AM - Peak 1 of 1																	
Peak Hour for Entire Intersection Begins at 07:15 AM																	
07:15 AM	10	**193**	**26**	**229**	21	**59**	**7**	**87**	**20**	68	22	110	5	51	29	85	511
07:30 AM	5	172	22	199	**24**	48	2	74	17	**77**	27	121	**17**	88	**42**	**147**	541
07:45 AM	**16**	185	22	223	17	45	7	69	19	65	**39**	**123**	8	**112**	24	144	**559**
08:00 AM	11	166	23	200	12	36	5	53	10	61	22	93	8	86	37	131	477
Total Volume	42	716	93	851	74	188	21	283	66	271	110	447	38	337	132	507	2088
% App. Total	4.9	84.1	10.9		26.1	66.4	7.4		14.8	60.6	24.6		7.5	66.5	26		
PHF	.656	.927	.894	.929	.771	.797	.750	.813	.825	.880	.705	.909	.559	.752	.786	.862	.934

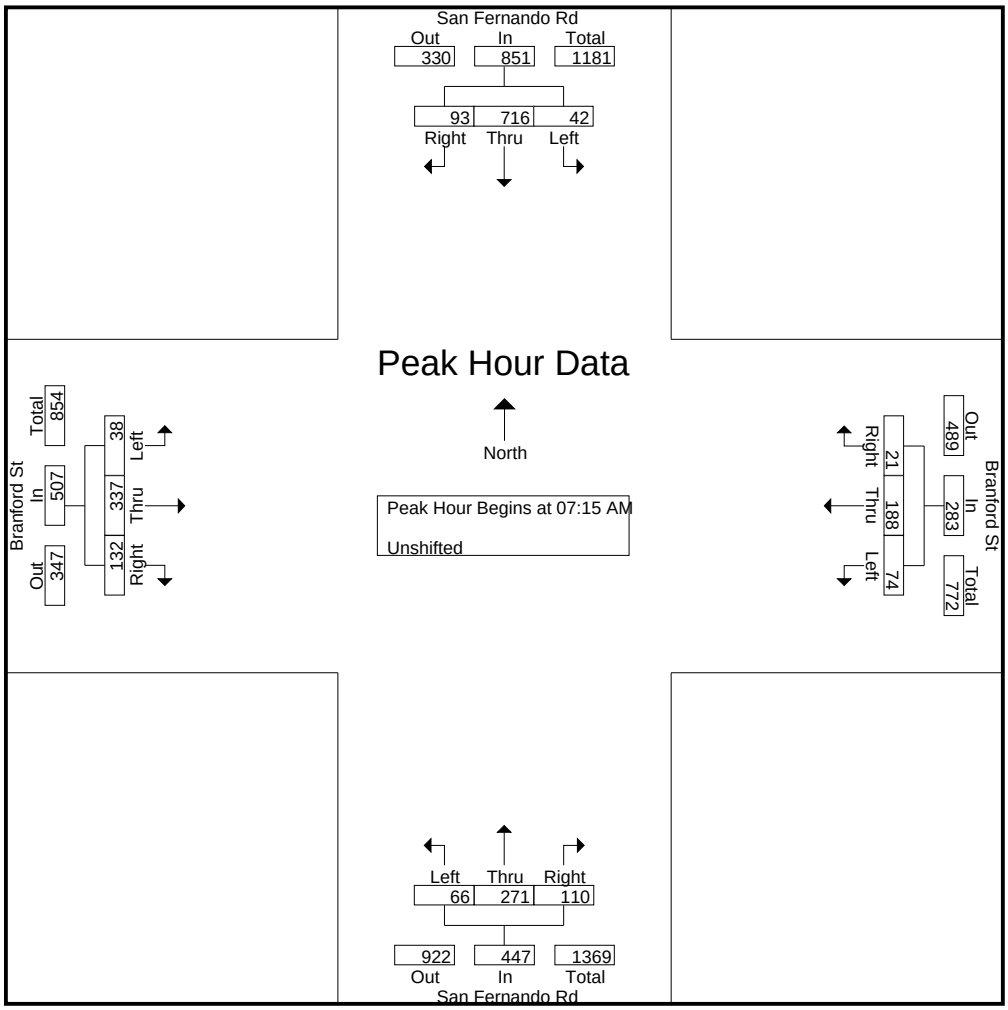

CITY TRAFFIC COUNTERS

626.991.7522

www.ctcounters.com

File Name : SanFBranford
Site Code : 00000000
Start Date : 1/14/2014
Page No : 3

	San Fernando Rd Southbound				Branford St Westbound				San Fernando Rd Northbound				Branford St Eastbound				
Start Time	Left	Thru	Right	App. Total	Left	Thru	Right	App. Total	Left	Thru	Right	App. Total	Left	Thru	Right	App. Total	Int. Total
Peak Hour Analysis From 10:00 AM to 01:45 PM - Peak 1 of 1																	
Peak Hour for Entire Intersection Begins at 01:00 PM																	
01:00 PM	11	62	10	83	14	37	**20**	71	9	81	16	106	4	32	18	54	314
01:15 PM	9	78	13	100	24	45	18	**87**	10	65	27	102	**10**	**47**	15	**72**	361
01:30 PM	11	**82**	**25**	**118**	**27**	**49**	5	81	**12**	79	**39**	**130**	10	46	12	68	**397**
01:45 PM	**16**	81	12	109	9	28	13	50	9	**91**	24	124	8	31	**22**	61	344
Total Volume	47	303	60	410	74	159	56	289	40	316	106	462	32	156	67	255	1416
% App. Total	11.5	73.9	14.6		25.6	55	19.4		8.7	68.4	22.9		12.5	61.2	26.3		
PHF	.734	.924	.600	.869	.685	.811	.700	.830	.833	.868	.679	.888	.800	.830	.761	.885	.892

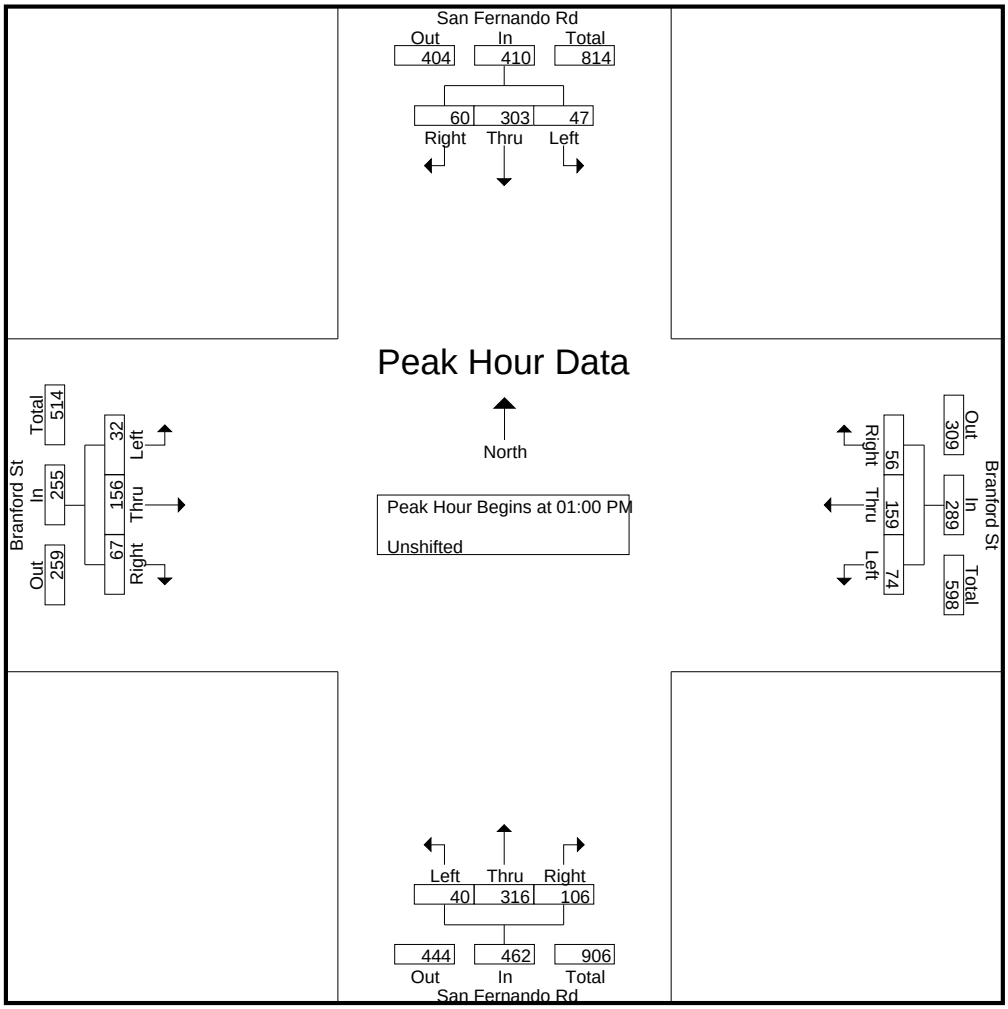

CITY TRAFFIC COUNTERS

626.991.7522

www.ctcounters.com

File Name : SanFBranford
Site Code : 00000000
Start Date : 1/14/2014
Page No : 4

	San Fernando Rd Southbound				Branford St Westbound				San Fernando Rd Northbound				Branford St Eastbound				
Start Time	Left	Thru	Right	App. Total	Left	Thru	Right	App. Total	Left	Thru	Right	App. Total	Left	Thru	Right	App. Total	Int. Total
Peak Hour Analysis From 02:00 PM to 05:45 PM - Peak 1 of 1																	
Peak Hour for Entire Intersection Begins at 04:30 PM																	
04:30 PM	**10**	79	10	99	**27**	**75**	9	**111**	14	**154**	**27**	**195**	14	39	8	61	466
04:45 PM	6	83	14	103	21	64	9	94	**24**	145	19	188	9	**59**	**19**	**87**	**472**
05:00 PM	8	69	**31**	**108**	15	70	11	96	9	127	11	147	**15**	38	9	62	413
05:15 PM	5	**84**	16	105	13	68	**17**	98	24	137	22	183	12	38	13	63	449
Total Volume	29	315	71	415	76	277	46	399	71	563	79	713	50	174	49	273	1800
% App. Total	7	75.9	17.1		19	69.4	11.5		10	79	11.1		18.3	63.7	17.9		
PHF	.725	.938	.573	.961	.704	.923	.676	.899	.740	.914	.731	.914	.833	.737	.645	.784	.953

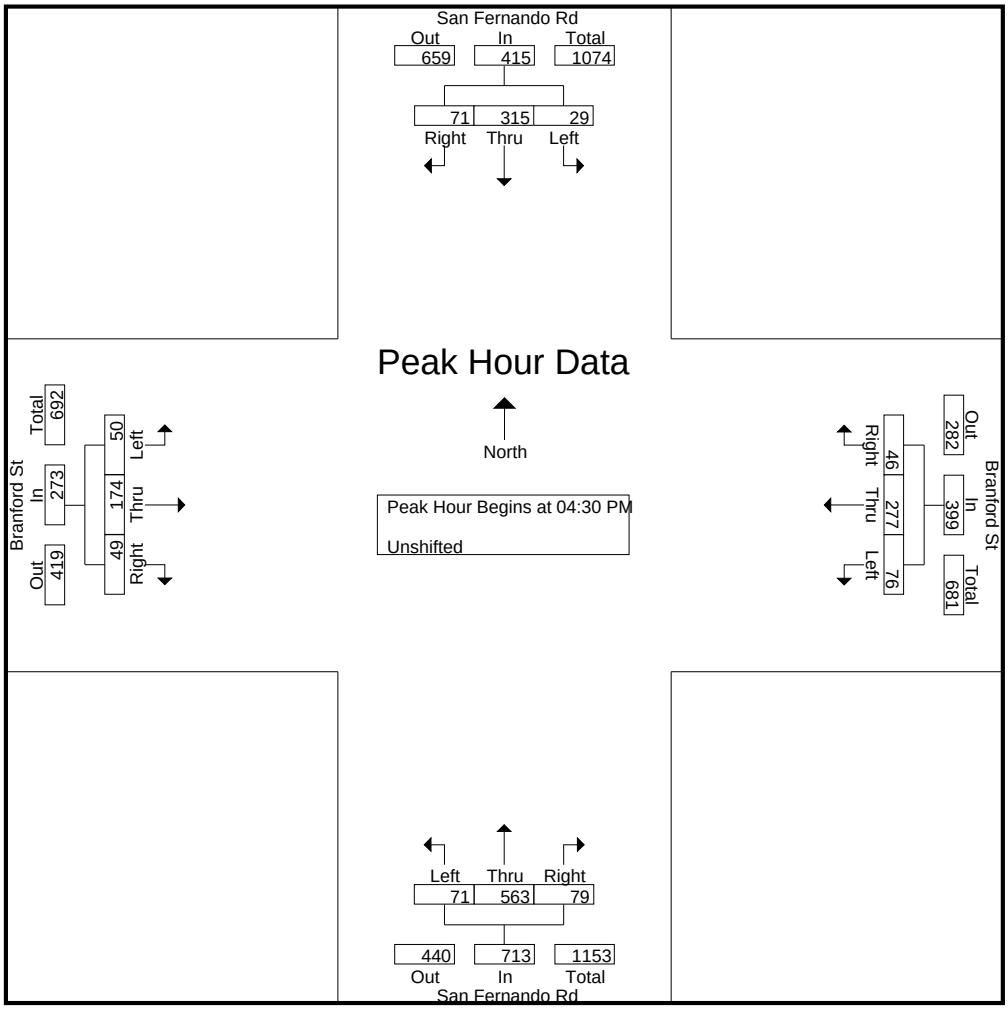

CITY TRAFFIC COUNTERS

626.991.7522

www.ctcounters.com

File Name : SanFBranford_MC
Site Code : 00000000
Start Date : 1/14/2014
Page No : 1

Groups Printed- Bank 2

	San Fernando Rd Southbound			Branford St Westbound			San Fernando Rd Northbound			Branford St Eastbound			
Start Time	Left	Thru	Right	Left	Thru	Right	Left	Thru	Right	Left	Thru	Right	Int. Total
07:15 AM	0	1	0	0	0	0	0	0	0	0	0	1	2
07:30 AM	0	0	0	0	0	0	1	0	0	1	1	0	3
07:45 AM	0	0	0	0	0	0	0	1	0	0	0	0	1
Total	0	1	0	0	0	0	1	1	0	1	1	1	6
08:00 AM	0	0	0	0	0	0	0	1	0	0	0	0	1
08:30 AM	0	0	0	0	1	0	0	0	0	0	0	0	1
08:45 AM	0	0	0	0	0	1	0	1	0	0	1	0	3
Total	0	0	0	0	1	1	0	2	0	0	1	0	5
09:30 AM	1	0	0	0	1	0	0	0	0	0	0	0	2
09:45 AM	0	0	0	0	0	0	0	0	0	0	1	0	1
Total	1	0	0	0	1	0	0	0	0	0	1	0	3
12:00 PM	0	0	0	0	0	0	0	1	1	0	0	0	2
12:45 PM	0	1	0	0	0	0	0	0	0	0	1	1	3
Total	0	1	0	0	0	0	0	1	1	0	1	1	5
01:15 PM	1	0	0	0	0	0	0	0	0	0	0	0	1
01:30 PM	0	0	0	0	0	0	0	1	0	0	0	0	1
01:45 PM	0	0	0	0	0	0	1	1	0	0	0	0	2
Total	1	0	0	0	0	0	1	2	0	0	0	0	4
03:00 PM	0	0	0	0	0	0	1	0	0	0	2	0	3
03:15 PM	0	1	0	0	0	0	0	0	0	0	0	0	1
Total	0	1	0	0	0	0	1	0	0	0	2	0	4
04:00 PM	0	0	0	0	0	0	0	0	0	0	0	1	1
04:30 PM	0	0	0	0	0	0	0	0	1	0	0	0	1
04:45 PM	0	0	0	0	1	0	0	0	0	0	0	0	1
Total	0	0	0	0	1	0	0	0	1	0	0	1	3
05:15 PM	0	1	0	0	0	0	0	0	0	0	1	0	2
05:45 PM	0	0	0	0	0	0	0	0	0	0	1	0	1
Total	0	1	0	0	0	0	0	0	0	0	2	0	3
Grand Total	2	4	0	0	3	1	3	6	2	1	8	3	33
Apprch %	33.3	66.7	0	0	75	25	27.3	54.5	18.2	8.3	66.7	25	
Total %	6.1	12.1	0	0	9.1	3	9.1	18.2	6.1	3	24.2	9.1	

CITY TRAFFIC COUNTERS

626.991.7522

www.ctcounters.com

File Name : SanFBranford_MC
Site Code : 00000000
Start Date : 1/14/2014
Page No : 2

	San Fernando Rd Southbound				Branford St Westbound				San Fernando Rd Northbound				Branford St Eastbound				
Start Time	Left	Thru	Right	App. Total	Left	Thru	Right	App. Total	Left	Thru	Right	App. Total	Left	Thru	Right	App. Total	Int. Total
Peak Hour Analysis From 07:00 AM to 09:45 AM - Peak 1 of 1																	
Peak Hour for Entire Intersection Begins at 07:15 AM																	
07:15 AM	0	**1**	0	**1**	0	0	0	0	0	0	0	0	0	0	**1**	1	2
07:30 AM	0	0	0	0	0	0	0	0	**1**	0	0	**1**	**1**	**1**	0	**2**	**3**
07:45 AM	0	0	0	0	0	0	0	0	0	**1**	0	1	0	0	0	0	1
08:00 AM	0	0	0	0	0	0	0	0	0	1	0	1	0	0	0	0	1
Total Volume	0	1	0	1	0	0	0	0	1	2	0	3	1	1	1	3	7
% App. Total	0	100	0		0	0	0		33.3	66.7	0		33.3	33.3	33.3		
PHF	.000	.250	.000	.250	.000	.000	.000	.000	.250	.500	.000	.750	.250	.250	.250	.375	.583

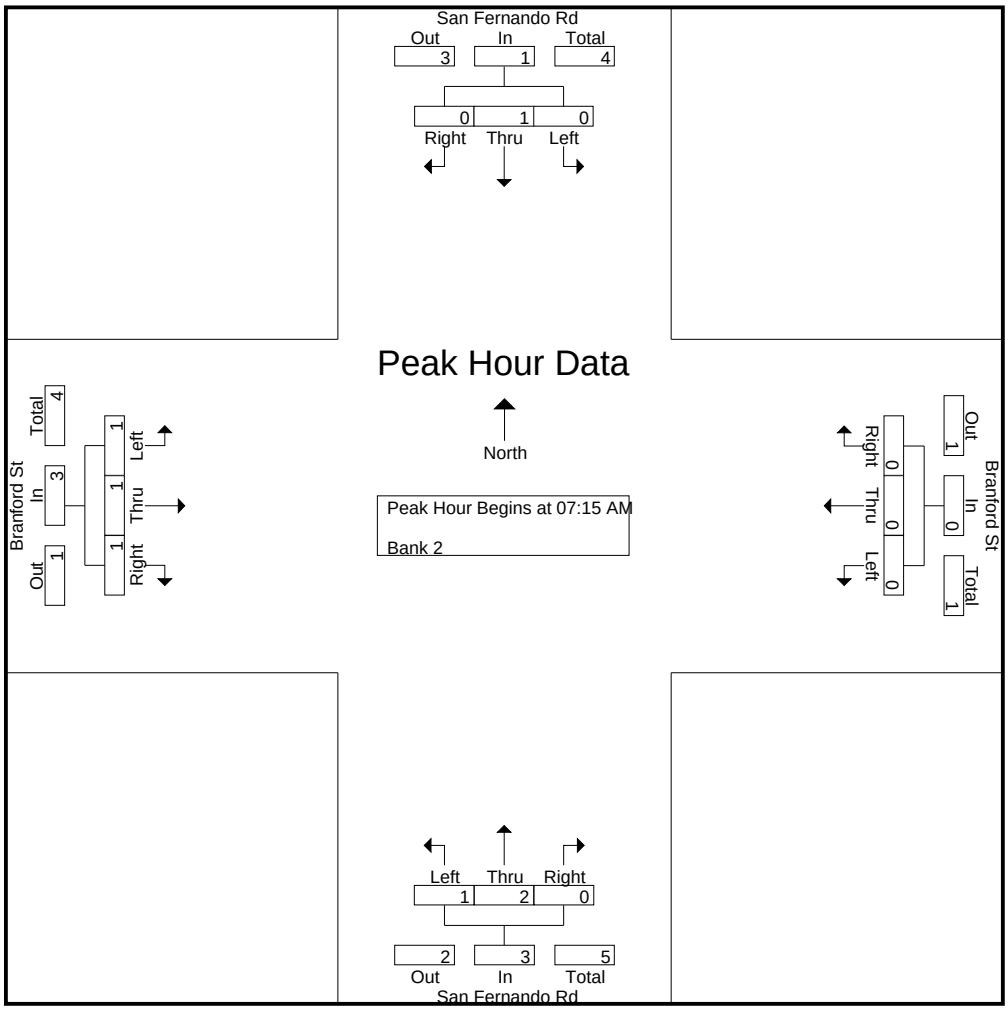

CITY TRAFFIC COUNTERS

626.991.7522

www.ctcounters.com

File Name : SanFBranford_MC
Site Code : 00000000
Start Date : 1/14/2014
Page No : 3

	San Fernando Rd Southbound				Branford St Westbound				San Fernando Rd Northbound				Branford St Eastbound				
Start Time	Left	Thru	Right	App. Total	Left	Thru	Right	App. Total	Left	Thru	Right	App. Total	Left	Thru	Right	App. Total	Int. Total
Peak Hour Analysis From 10:00 AM to 01:45 PM - Peak 1 of 1																	
Peak Hour for Entire Intersection Begins at 12:00 PM																	
12:00 PM	0	0	0	0	0	0	0	0	0	**1**	**1**	**2**	0	0	0	0	2
12:15 PM	0	0	0	0	0	0	0	0	0	0	0	0	0	0	0	0	0
12:30 PM	0	0	0	0	0	0	0	0	0	0	0	0	0	0	0	0	0
12:45 PM	0	**1**	0	**1**	0	0	0	0	0	0	0	0	0	**1**	**1**	**2**	**3**
Total Volume	0	1	0	1	0	0	0	0	0	1	1	2	0	1	1	2	5
% App. Total	0	100	0		0	0	0		0	50	50		0	50	50		
PHF	.000	.250	.000	.250	.000	.000	.000	.000	.000	.250	.250	.250	.000	.250	.250	.250	.417

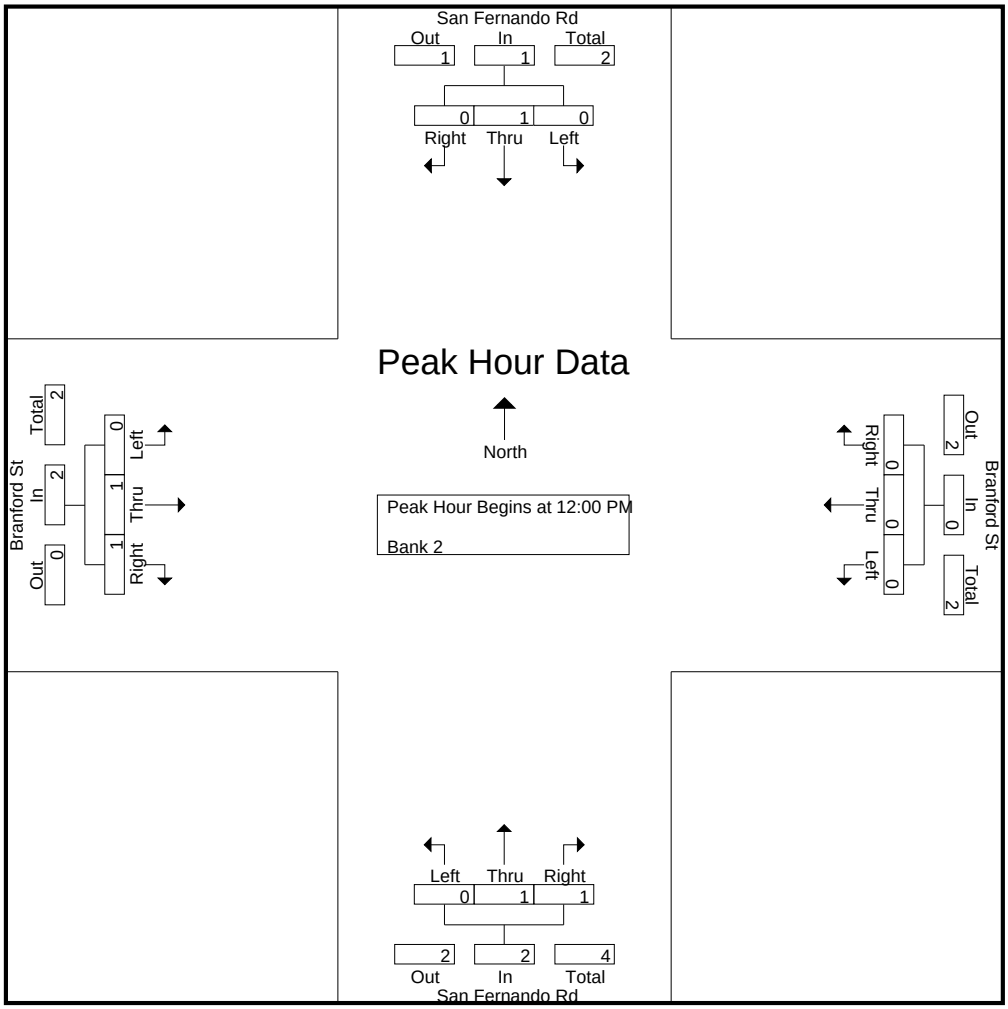

CITY TRAFFIC COUNTERS

626.991.7522

www.ctcounters.com

File Name : SanFBranford_MC
Site Code : 00000000
Start Date : 1/14/2014
Page No : 4

	San Fernando Rd Southbound				Branford St Westbound				San Fernando Rd Northbound				Branford St Eastbound				
Start Time	Left	Thru	Right	App. Total	Left	Thru	Right	App. Total	Left	Thru	Right	App. Total	Left	Thru	Right	App. Total	Int. Total
Peak Hour Analysis From 02:00 PM to 05:45 PM - Peak 1 of 1																	
Peak Hour for Entire Intersection Begins at 02:30 PM																	
02:30 PM	0	0	0	0	0	0	0	0	0	0	0	0	0	0	0	0	0
02:45 PM	0	0	0	0	0	0	0	0	0	0	0	0	0	0	0	0	0
03:00 PM	0	0	0	0	0	0	0	0	**1**	0	0	**1**	0	**2**	0	**2**	**3**
03:15 PM	0	**1**	0	**1**	0	0	0	0	0	0	0	0	0	0	0	0	1
Total Volume	0	1	0	1	0	0	0	0	1	0	0	1	0	2	0	2	4
% App. Total	0	100	0		0	0	0		100	0	0		0	100	0		
PHF	.000	.250	.000	.250	.000	.000	.000	.000	.250	.000	.000	.250	.000	.250	.000	.250	.333

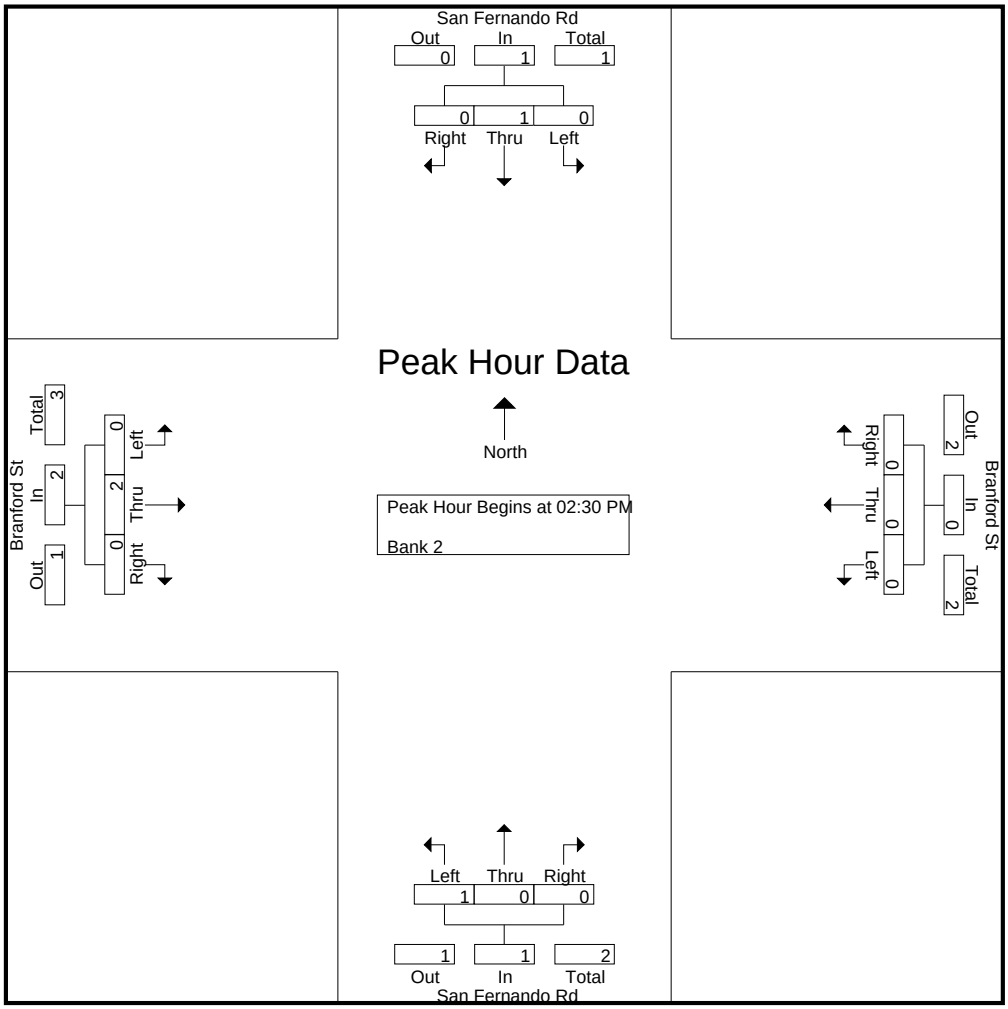

CITY TRAFFIC COUNTERS

626.991.7522

www.ctcounters.com

File Name : SanFBranford_Bus
Site Code : 00000000
Start Date : 1/14/2014
Page No : 1

Groups Printed- Bank 1

	San Fernando Rd Southbound			Branford St Westbound			San Fernando Rd Northbound			Branford St Eastbound			
Start Time	Left	Thru	Right	Left	Thru	Right	Left	Thru	Right	Left	Thru	Right	Int. Total
07:00 AM	0	3	0	0	0	0	0	3	2	0	1	0	9
07:15 AM	0	3	0	0	0	0	0	2	0	0	0	1	6
07:30 AM	0	1	0	0	1	0	0	1	0	0	0	0	3
07:45 AM	0	0	0	0	0	0	0	1	0	0	0	0	1
Total	0	7	0	0	1	0	0	7	2	0	1	1	19
08:00 AM	0	3	0	0	0	0	0	4	0	0	0	0	7
08:15 AM	0	1	0	0	0	0	0	2	0	0	0	0	3
08:30 AM	0	2	0	0	0	0	0	1	0	0	0	0	3
08:45 AM	0	0	0	0	0	0	0	2	0	0	0	0	2
Total	0	6	0	0	0	0	0	9	0	0	0	0	15
09:00 AM	0	1	0	0	0	0	0	1	0	0	0	0	2
09:15 AM	0	0	0	0	0	0	0	1	0	0	0	0	1
09:30 AM	0	1	0	0	0	0	0	0	0	0	0	0	1
09:45 AM	0	0	0	0	0	0	0	1	0	0	0	0	1
Total	0	2	0	0	0	0	0	3	0	0	0	0	5
12:00 PM	0	2	0	0	0	0	0	1	0	0	0	0	3
12:15 PM	1	0	0	0	0	0	0	1	0	0	0	0	2
12:30 PM	0	3	0	0	0	0	1	1	0	0	0	0	5
12:45 PM	0	2	0	0	0	0	0	1	0	0	0	0	3
Total	1	7	0	0	0	0	1	4	0	0	0	0	13
01:00 PM	0	0	0	0	0	0	0	1	0	0	0	0	1
01:15 PM	0	2	0	0	0	0	0	1	0	0	0	2	5
01:30 PM	0	2	0	0	0	0	1	0	0	0	0	0	3
01:45 PM	0	2	0	0	1	0	0	3	0	0	1	0	7
Total	0	6	0	0	1	0	1	5	0	0	1	2	16
03:00 PM	1	0	1	0	1	0	0	1	0	0	0	0	4
03:15 PM	0	1	0	0	1	0	0	1	0	0	0	0	3
03:30 PM	0	0	0	0	0	0	0	1	0	0	0	0	1
03:45 PM	0	1	0	0	0	0	0	0	0	0	0	0	1
Total	1	2	1	0	2	0	0	3	0	0	0	0	9
04:00 PM	0	2	0	0	0	0	0	2	0	0	0	0	4
04:15 PM	0	1	0	0	0	0	0	2	0	0	0	0	3
04:30 PM	0	1	0	0	0	0	0	1	0	0	0	0	2
04:45 PM	0	1	0	0	0	0	0	3	0	0	0	0	4
Total	0	5	0	0	0	0	0	8	0	0	0	0	13
05:00 PM	0	1	0	0	0	0	0	1	0	0	0	0	2
05:15 PM	0	1	0	0	0	0	0	2	0	0	0	0	3
05:30 PM	0	1	0	0	0	0	0	0	0	0	0	0	1
05:45 PM	0	2	0	0	0	0	0	1	0	0	0	0	3
Total	0	5	0	0	0	0	0	4	0	0	0	0	9
Grand Total	2	40	1	0	4	0	2	43	2	0	2	3	99
Apprch %	4.7	93	2.3	0	100	0	4.3	91.5	4.3	0	40	60	
Total %	2	40.4	1	0	4	0	2	43.4	2	0	2	3	

CITY TRAFFIC COUNTERS

626.991.7522

www.ctcounters.com

File Name : SanFBranford_Bus
Site Code : 00000000
Start Date : 1/14/2014
Page No : 2

	San Fernando Rd Southbound				Branford St Westbound				San Fernando Rd Northbound				Branford St Eastbound				
Start Time	Left	Thru	Right	App. Total	Left	Thru	Right	App. Total	Left	Thru	Right	App. Total	Left	Thru	Right	App. Total	Int. Total
Peak Hour Analysis From 07:00 AM to 09:45 AM - Peak 1 of 1																	
Peak Hour for Entire Intersection Begins at 07:00 AM																	
07:00 AM	0	**3**	0	**3**	0	0	0	0	0	**3**	**2**	**5**	0	**1**	0	**1**	**9**
07:15 AM	0	3	0	3	0	0	0	0	0	2	0	2	0	0	**1**	1	6
07:30 AM	0	1	0	1	0	**1**	0	**1**	0	1	0	1	0	0	0	0	3
07:45 AM	0	0	0	0	0	0	0	0	0	1	0	1	0	0	0	0	1
Total Volume	0	7	0	7	0	1	0	1	0	7	2	9	0	1	1	2	19
% App. Total	0	100	0		0	100	0		0	77.8	22.2		0	50	50		
PHF	.000	.583	.000	.583	.000	.250	.000	.250	.000	.583	.250	.450	.000	.250	.250	.500	.528

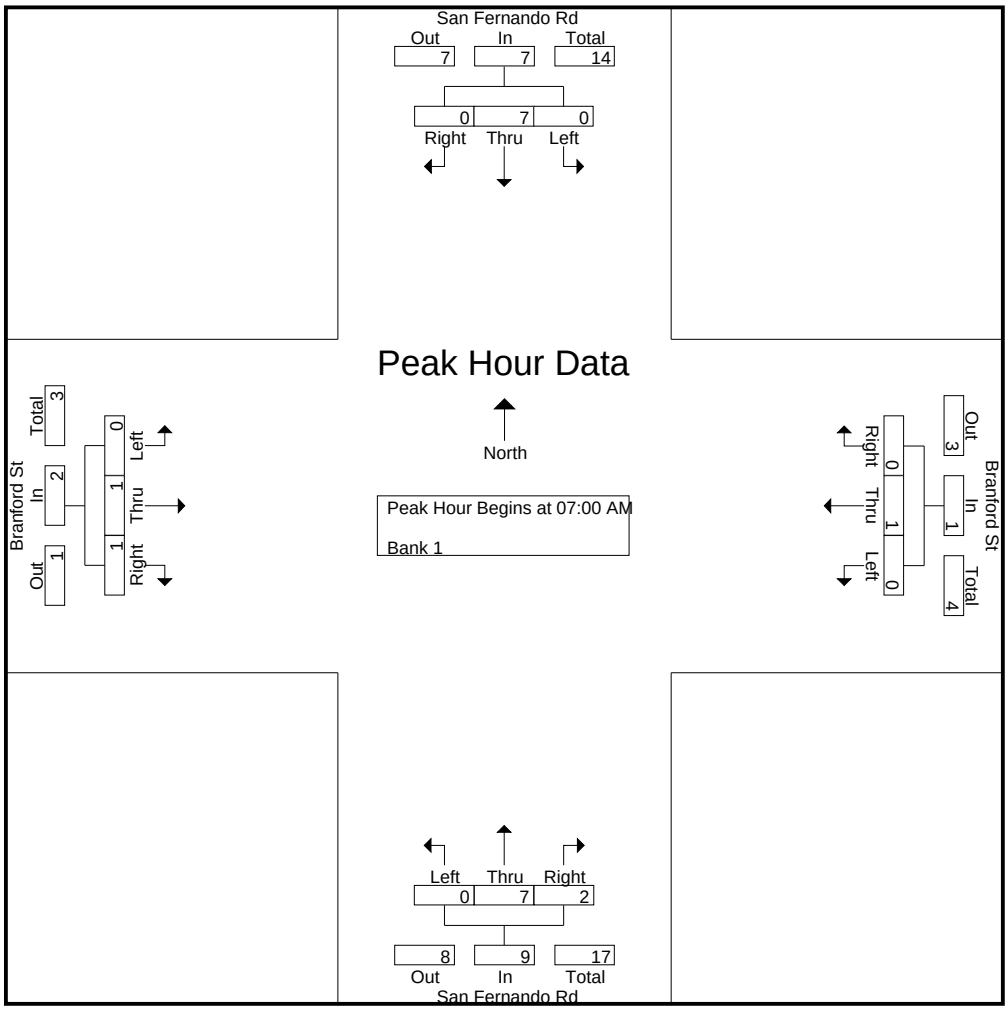

CITY TRAFFIC COUNTERS

626.991.7522

www.ctcounters.com

File Name : SanFBranford_Bus
Site Code : 00000000
Start Date : 1/14/2014
Page No : 3

	San Fernando Rd Southbound				Branford St Westbound				San Fernando Rd Northbound				Branford St Eastbound				
Start Time	Left	Thru	Right	App. Total	Left	Thru	Right	App. Total	Left	Thru	Right	App. Total	Left	Thru	Right	App. Total	Int. Total
Peak Hour Analysis From 10:00 AM to 01:45 PM - Peak 1 of 1																	
Peak Hour for Entire Intersection Begins at 01:00 PM																	
01:00 PM	0	0	0	0	0	0	0	0	0	1	0	1	0	0	0	0	1
01:15 PM	0	**2**	0	**2**	0	0	0	0	0	1	0	1	0	0	**2**	**2**	5
01:30 PM	0	2	0	2	0	0	0	0	**1**	0	0	1	0	0	0	0	3
01:45 PM	0	2	0	2	0	**1**	0	**1**	0	**3**	0	**3**	0	**1**	0	1	**7**
Total Volume	0	6	0	6	0	1	0	1	1	5	0	6	0	1	2	3	16
% App. Total	0	100	0		0	100	0		16.7	83.3	0		0	33.3	66.7		
PHF	.000	.750	.000	.750	.000	.250	.000	.250	.250	.417	.000	.500	.000	.250	.250	.375	.571

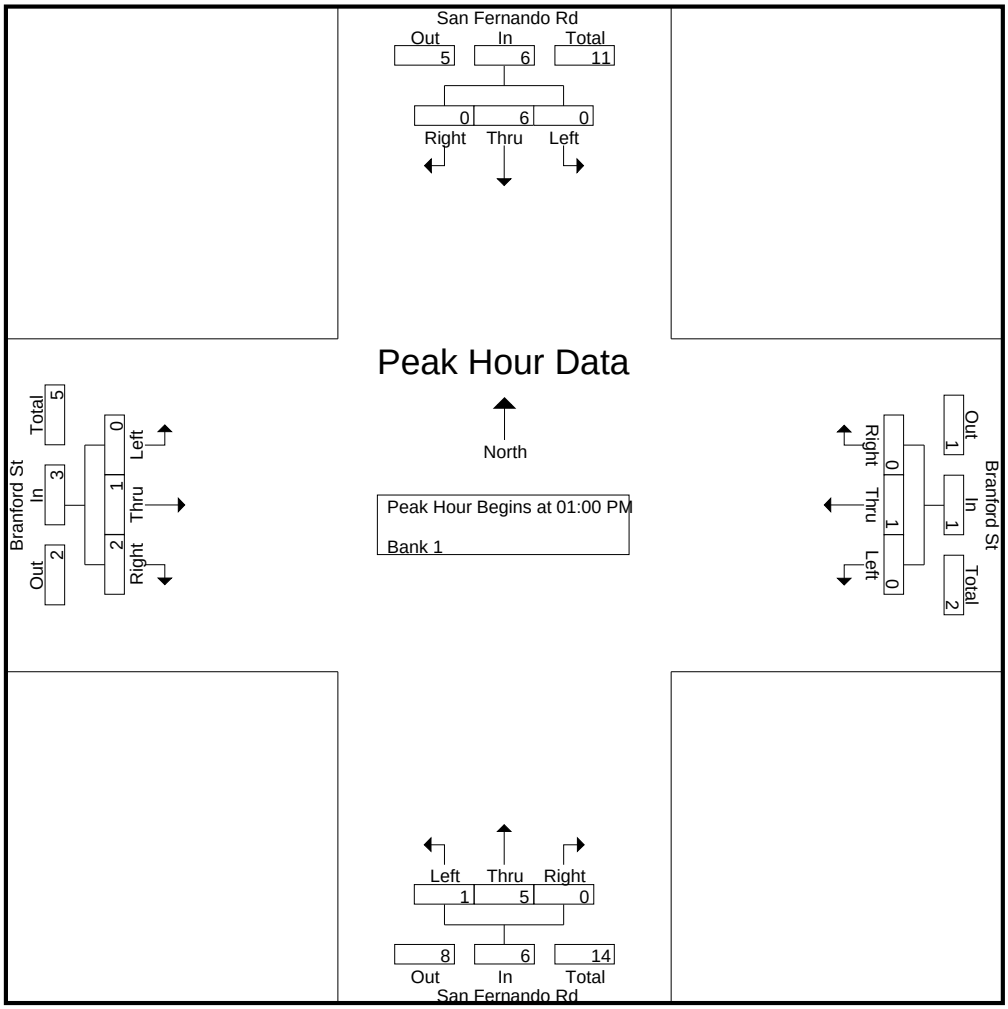

CITY TRAFFIC COUNTERS

626.991.7522

www.ctcounters.com

File Name : SanFBranford_Bus
Site Code : 00000000
Start Date : 1/14/2014
Page No : 4

	San Fernando Rd Southbound				Branford St Westbound				San Fernando Rd Northbound				Branford St Eastbound				
Start Time	Left	Thru	Right	App. Total	Left	Thru	Right	App. Total	Left	Thru	Right	App. Total	Left	Thru	Right	App. Total	Int. Total
Peak Hour Analysis From 02:00 PM to 05:45 PM - Peak 1 of 1																	
Peak Hour for Entire Intersection Begins at 04:00 PM																	
04:00 PM	0	**2**	0	**2**	0	0	0	0	0	2	0	2	0	0	0	0	**4**
04:15 PM	0	1	0	1	0	0	0	0	0	2	0	2	0	0	0	0	3
04:30 PM	0	1	0	1	0	0	0	0	0	1	0	1	0	0	0	0	2
04:45 PM	0	1	0	1	0	0	0	0	0	**3**	0	**3**	0	0	0	0	4
Total Volume	0	5	0	5	0	0	0	0	0	8	0	8	0	0	0	0	13
% App. Total	0	100	0		0	0	0		0	100	0		0	0	0		
PHF	.000	.625	.000	.625	.000	.000	.000	.000	.000	.667	.000	.667	.000	.000	.000	.000	.813

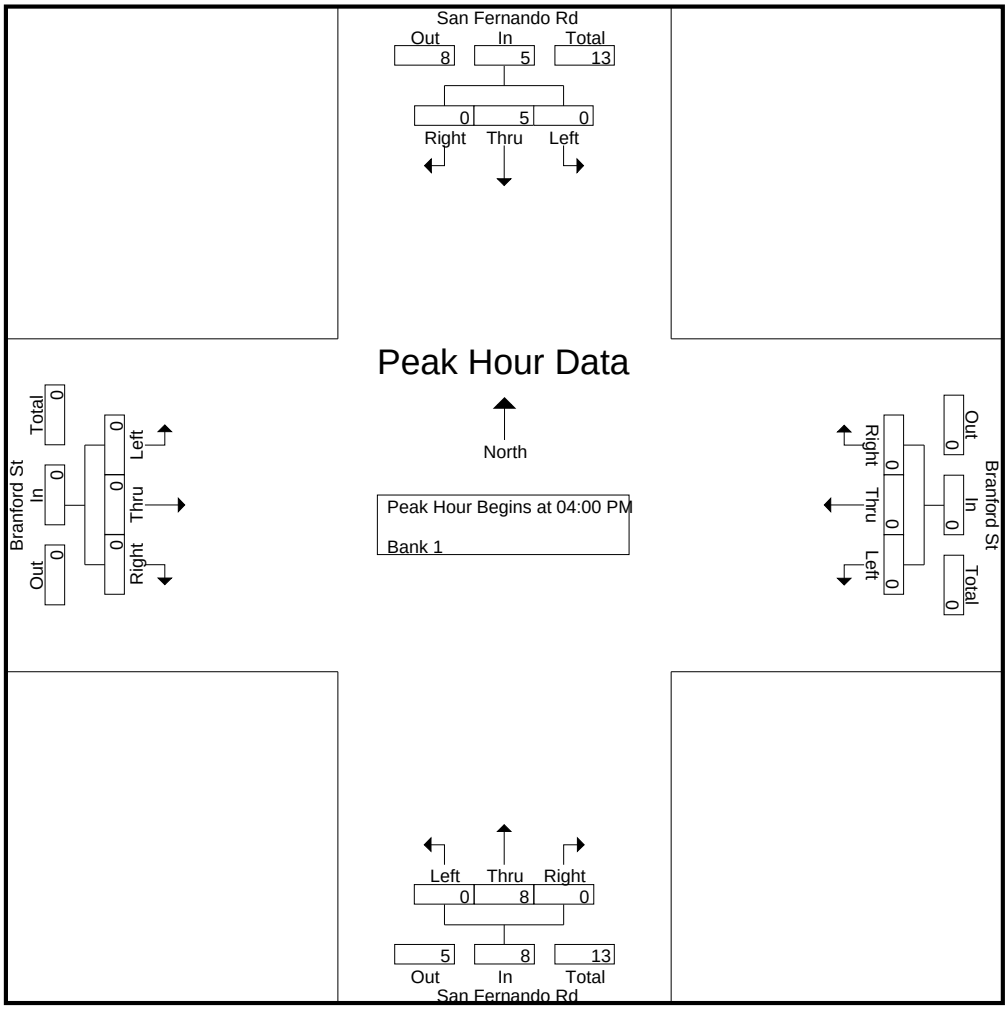

CITY TRAFFIC COUNTERS

626.991.7522

www.ctcounters.com

File Name : SanFBranford_2Axle
Site Code : 00000000
Start Date : 1/14/2014
Page No : 1

Groups Printed- Unshifted

	San Fernando Rd Southbound			Branford St Westbound			San Fernando Rd Northbound			Branford St Eastbound			
Start Time	Left	Thru	Right	Left	Thru	Right	Left	Thru	Right	Left	Thru	Right	Int. Total
07:00 AM	1	4	1	2	4	1	0	3	1	1	2	1	21
07:15 AM	2	6	0	2	4	2	0	7	0	1	3	1	28
07:30 AM	2	11	0	4	4	1	0	5	1	3	7	4	42
07:45 AM	2	12	2	3	6	2	0	1	3	0	2	1	34
Total	7	33	3	11	18	6	0	16	5	5	14	7	125
08:00 AM	5	21	0	4	8	4	1	4	2	2	5	12	68
08:15 AM	4	18	2	2	4	0	0	8	6	1	4	25	74
08:30 AM	5	15	1	4	6	2	2	9	3	2	5	13	67
08:45 AM	3	16	1	8	8	2	1	9	7	3	3	4	65
Total	17	70	4	18	26	8	4	30	18	8	17	54	274
09:00 AM	3	14	3	2	6	4	6	13	3	2	6	5	67
09:15 AM	3	19	4	4	8	3	4	8	6	4	11	10	84
09:30 AM	4	14	2	2	11	5	0	10	6	0	5	2	61
09:45 AM	3	5	0	3	8	3	3	11	6	2	15	2	61
Total	13	52	9	11	33	15	13	42	21	8	37	19	273
12:00 PM	2	15	0	2	6	2	1	9	6	0	5	0	48
12:15 PM	7	4	2	4	8	3	3	5	7	0	6	2	51
12:30 PM	2	1	3	5	3	3	2	1	3	2	5	1	31
12:45 PM	6	8	5	3	8	2	0	10	2	1	2	3	50
Total	17	28	10	14	25	10	6	25	18	3	18	6	180
01:00 PM	3	16	2	2	3	3	2	13	4	1	6	1	56
01:15 PM	3	6	0	4	2	2	1	11	5	0	8	2	44
01:30 PM	0	10	3	5	6	0	3	12	3	2	3	1	48
01:45 PM	8	10	1	1	5	1	0	12	4	0	4	0	46
Total	14	42	6	12	16	6	6	48	16	3	21	4	194
03:00 PM	2	3	2	2	4	1	2	7	2	1	3	2	31
03:15 PM	3	9	2	2	4	3	3	13	1	1	5	2	48
03:30 PM	3	5	0	1	3	0	4	6	7	1	7	2	39
03:45 PM	5	3	2	5	7	1	3	11	3	2	8	3	53
Total	13	20	6	10	18	5	12	37	13	5	23	9	171
04:00 PM	3	3	2	1	0	0	3	4	4	1	11	1	33
04:15 PM	3	8	2	3	6	0	6	2	3	1	5	0	39
04:30 PM	4	4	1	1	2	0	3	3	3	1	4	1	27
04:45 PM	0	4	0	1	3	0	3	3	3	0	3	0	20
Total	10	19	5	6	11	0	15	12	13	3	23	2	119
05:00 PM	3	2	2	1	6	2	4	3	1	1	6	0	31
05:15 PM	0	0	2	0	2	1	3	7	1	1	2	1	20
05:30 PM	1	0	1	0	4	0	1	4	0	0	1	2	14
05:45 PM	0	0	0	0	0	0	0	0	2	0	2	0	4
Total	4	2	5	1	12	3	8	14	4	2	11	3	69
Grand Total	95	266	48	83	159	53	64	224	108	37	164	104	1405
Apprch %	23.2	65	11.7	28.1	53.9	18	16.2	56.6	27.3	12.1	53.8	34.1	
Total %	6.8	18.9	3.4	5.9	11.3	3.8	4.6	15.9	7.7	2.6	11.7	7.4	

CITY TRAFFIC COUNTERS

626.991.7522

www.ctcounters.com

File Name : SanFBranford_2Axle
Site Code : 00000000
Start Date : 1/14/2014
Page No : 2

	San Fernando Rd Southbound				Branford St Westbound				San Fernando Rd Northbound				Branford St Eastbound				
Start Time	Left	Thru	Right	App. Total	Left	Thru	Right	App. Total	Left	Thru	Right	App. Total	Left	Thru	Right	App. Total	Int. Total
Peak Hour Analysis From 07:00 AM to 09:45 AM - Peak 1 of 1																	
Peak Hour for Entire Intersection Begins at 08:30 AM																	
08:30 AM	**5**	15	1	21	4	6	2	12	2	9	3	14	2	5	**13**	20	67
08:45 AM	3	16	1	20	**8**	**8**	2	**18**	1	9	**7**	17	3	3	4	10	65
09:00 AM	3	14	3	20	2	6	**4**	12	**6**	**13**	3	**22**	2	6	5	13	67
09:15 AM	3	**19**	**4**	**26**	4	8	3	15	4	8	6	18	**4**	**11**	10	**25**	**84**
Total Volume	14	64	9	87	18	28	11	57	13	39	19	71	11	25	32	68	283
% App. Total	16.1	73.6	10.3		31.6	49.1	19.3		18.3	54.9	26.8		16.2	36.8	47.1		
PHF	.700	.842	.563	.837	.563	.875	.688	.792	.542	.750	.679	.807	.688	.568	.615	.680	.842

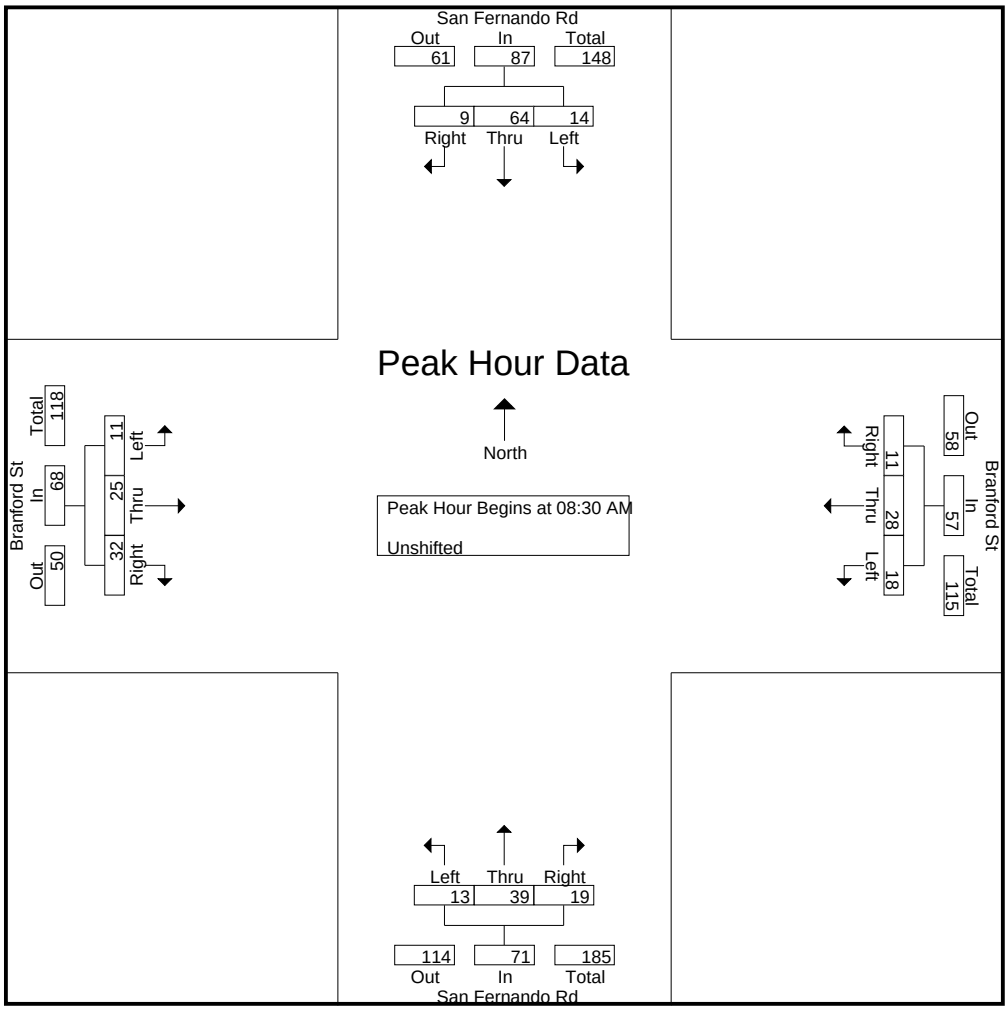

CITY TRAFFIC COUNTERS

626.991.7522

www.ctcounters.com

File Name : SanFBranford_2Axle
Site Code : 00000000
Start Date : 1/14/2014
Page No : 3

	San Fernando Rd Southbound				Branford St Westbound				San Fernando Rd Northbound				Branford St Eastbound				
Start Time	Left	Thru	Right	App. Total	Left	Thru	Right	App. Total	Left	Thru	Right	App. Total	Left	Thru	Right	App. Total	Int. Total
Peak Hour Analysis From 10:00 AM to 01:45 PM - Peak 1 of 1																	
Peak Hour for Entire Intersection Begins at 12:45 PM																	
12:45 PM	**6**	8	**5**	19	3	**8**	2	**13**	0	10	2	12	1	2	**3**	6	50
01:00 PM	3	**16**	2	**21**	2	3	**3**	8	2	**13**	4	**19**	1	6	1	8	**56**
01:15 PM	3	6	0	9	4	2	2	8	1	11	**5**	17	0	**8**	2	**10**	44
01:30 PM	0	10	3	13	**5**	6	0	11	**3**	12	3	18	**2**	3	1	6	48
Total Volume	12	40	10	62	14	19	7	40	6	46	14	66	4	19	7	30	198
% App. Total	19.4	64.5	16.1		35	47.5	17.5		9.1	69.7	21.2		13.3	63.3	23.3		
PHF	.500	.625	.500	.738	.700	.594	.583	.769	.500	.885	.700	.868	.500	.594	.583	.750	.884

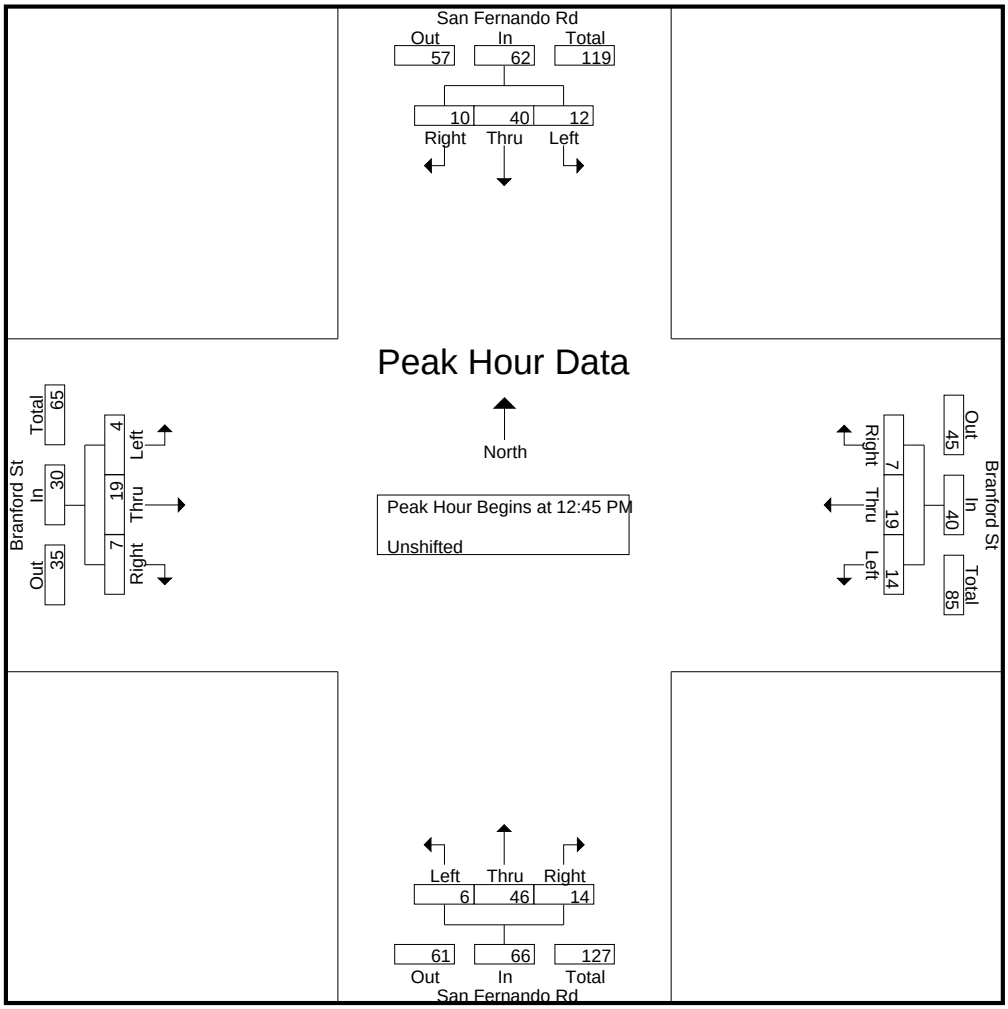

CITY TRAFFIC COUNTERS

626.991.7522

www.ctcounters.com

File Name : SanFBranford_2Axle
Site Code : 00000000
Start Date : 1/14/2014
Page No : 4

	San Fernando Rd Southbound				Branford St Westbound				San Fernando Rd Northbound				Branford St Eastbound				
Start Time	Left	Thru	Right	App. Total	Left	Thru	Right	App. Total	Left	Thru	Right	App. Total	Left	Thru	Right	App. Total	Int. Total
Peak Hour Analysis From 02:00 PM to 05:45 PM - Peak 1 of 1																	
Peak Hour for Entire Intersection Begins at 03:15 PM																	
03:15 PM	3	**9**	**2**	**14**	2	4	**3**	9	3	**13**	1	**17**	1	5	2	8	48
03:30 PM	3	5	0	8	1	3	0	4	**4**	6	**7**	17	1	7	2	10	39
03:45 PM	**5**	3	2	10	**5**	**7**	1	**13**	3	11	3	17	**2**	8	**3**	**13**	**53**
04:00 PM	3	3	2	8	1	0	0	1	3	4	4	11	1	**11**	1	13	33
Total Volume	14	20	6	40	9	14	4	27	13	34	15	62	5	31	8	44	173
% App. Total	35	50	15		33.3	51.9	14.8		21	54.8	24.2		11.4	70.5	18.2		
PHF	.700	.556	.750	.714	.450	.500	.333	.519	.813	.654	.536	.912	.625	.705	.667	.846	.816

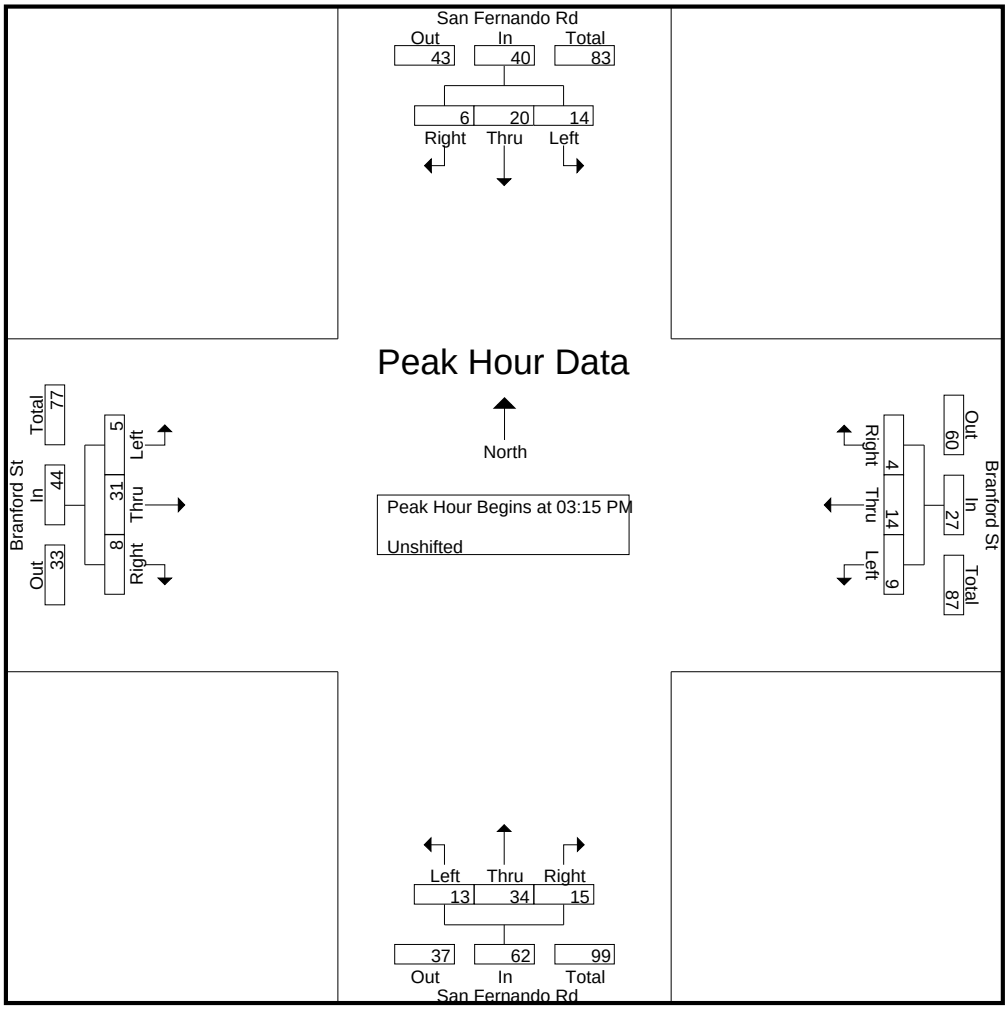

CITY TRAFFIC COUNTERS

626.991.7522

www.ctcounters.com

File Name : SanFBranford_3Axle
Site Code : 00000000
Start Date : 1/14/2014
Page No : 1

Groups Printed- Bank 1

	San Fernando Rd Southbound			Branford St Westbound			San Fernando Rd Northbound			Branford St Eastbound			
Start Time	Left	Thru	Right	Left	Thru	Right	Left	Thru	Right	Left	Thru	Right	Int. Total
07:00 AM	0	2	0	1	0	0	0	1	0	1	0	0	5
07:15 AM	0	5	0	0	2	0	0	1	0	0	1	0	9
07:30 AM	1	2	0	0	1	0	1	0	0	1	3	0	9
07:45 AM	0	7	0	2	1	1	0	0	0	0	0	0	11
Total	1	16	0	3	4	1	1	2	0	2	4	0	34
08:00 AM	1	7	0	0	2	0	1	0	0	1	1	1	14
08:15 AM	0	5	0	1	3	0	0	1	0	0	0	0	10
08:30 AM	1	10	0	0	0	0	0	3	0	1	1	0	16
08:45 AM	0	11	1	0	0	1	0	1	1	0	0	1	16
Total	2	33	1	1	5	1	1	5	1	2	2	2	56
09:00 AM	2	4	0	0	1	0	1	2	0	0	1	1	12
09:15 AM	1	4	0	0	1	0	0	2	1	0	1	0	10
09:30 AM	0	2	0	0	3	0	0	1	0	0	0	1	7
09:45 AM	0	3	0	0	2	0	0	1	0	0	1	0	7
Total	3	13	0	0	7	0	1	6	1	0	3	2	36
12:00 PM	0	2	0	0	2	0	0	2	2	0	4	2	14
12:15 PM	0	4	0	0	1	0	0	0	1	0	1	2	9
12:30 PM	0	2	0	0	3	1	2	1	0	1	0	1	11
12:45 PM	2	1	1	0	1	0	1	1	0	0	4	0	11
Total	2	9	1	0	7	1	3	4	3	1	9	5	45
01:00 PM	1	3	0	1	0	0	0	1	0	0	1	1	8
01:15 PM	0	3	0	0	1	0	1	0	0	0	2	0	7
01:30 PM	0	0	0	0	0	0	0	1	0	0	0	0	1
01:45 PM	0	3	0	0	0	1	0	1	0	0	1	0	6
Total	1	9	0	1	1	1	1	3	0	0	4	1	22
03:00 PM	0	0	0	0	1	0	0	1	0	0	1	0	3
03:15 PM	0	0	0	2	0	1	1	1	2	0	1	0	8
03:30 PM	0	0	0	1	1	0	1	2	1	0	2	0	8
03:45 PM	0	1	0	1	0	0	0	1	1	0	2	1	7
Total	0	1	0	4	2	1	2	5	4	0	6	1	26
04:00 PM	0	1	0	0	0	0	0	0	0	0	2	0	3
04:15 PM	0	0	0	0	1	0	0	1	0	0	0	0	2
04:30 PM	0	0	0	0	0	0	0	1	0	0	0	0	1
04:45 PM	0	0	0	0	2	0	0	0	1	0	1	1	5
Total	0	1	0	0	3	0	0	2	1	0	3	1	11
05:00 PM	0	0	0	0	0	0	1	0	2	0	0	0	3
05:15 PM	0	0	0	0	1	0	1	0	0	0	2	0	4
05:30 PM	0	0	0	0	0	0	0	0	0	0	1	0	1
05:45 PM	0	0	1	0	0	0	0	0	0	0	0	0	1
Total	0	0	1	0	1	0	2	0	2	0	3	0	9
Grand Total	9	82	3	9	30	5	11	27	12	5	34	12	239
Apprch %	9.6	87.2	3.2	20.5	68.2	11.4	22	54	24	9.8	66.7	23.5	
Total %	3.8	34.3	1.3	3.8	12.6	2.1	4.6	11.3	5	2.1	14.2	5	

CITY TRAFFIC COUNTERS

626.991.7522

www.ctcounters.com

File Name : SanFBranford_3Axle
Site Code : 00000000
Start Date : 1/14/2014
Page No : 2

	San Fernando Rd Southbound				Branford St Westbound				San Fernando Rd Northbound				Branford St Eastbound				
Start Time	Left	Thru	Right	App. Total	Left	Thru	Right	App. Total	Left	Thru	Right	App. Total	Left	Thru	Right	App. Total	Int. Total
Peak Hour Analysis From 07:00 AM to 09:45 AM - Peak 1 of 1																	
Peak Hour for Entire Intersection Begins at 08:00 AM																	
08:00 AM	**1**	7	0	8	0	2	0	2	**1**	0	0	1	**1**	**1**	**1**	**3**	14
08:15 AM	0	5	0	5	**1**	**3**	0	**4**	0	1	0	1	0	0	0	0	10
08:30 AM	1	10	0	11	0	0	0	0	0	**3**	0	**3**	1	1	0	2	**16**
08:45 AM	0	**11**	**1**	**12**	0	0	**1**	1	0	1	**1**	2	0	0	1	1	16
Total Volume	2	33	1	36	1	5	1	7	1	5	1	7	2	2	2	6	56
% App. Total	5.6	91.7	2.8		14.3	71.4	14.3		14.3	71.4	14.3		33.3	33.3	33.3		
PHF	.500	.750	.250	.750	.250	.417	.250	.438	.250	.417	.250	.583	.500	.500	.500	.500	.875

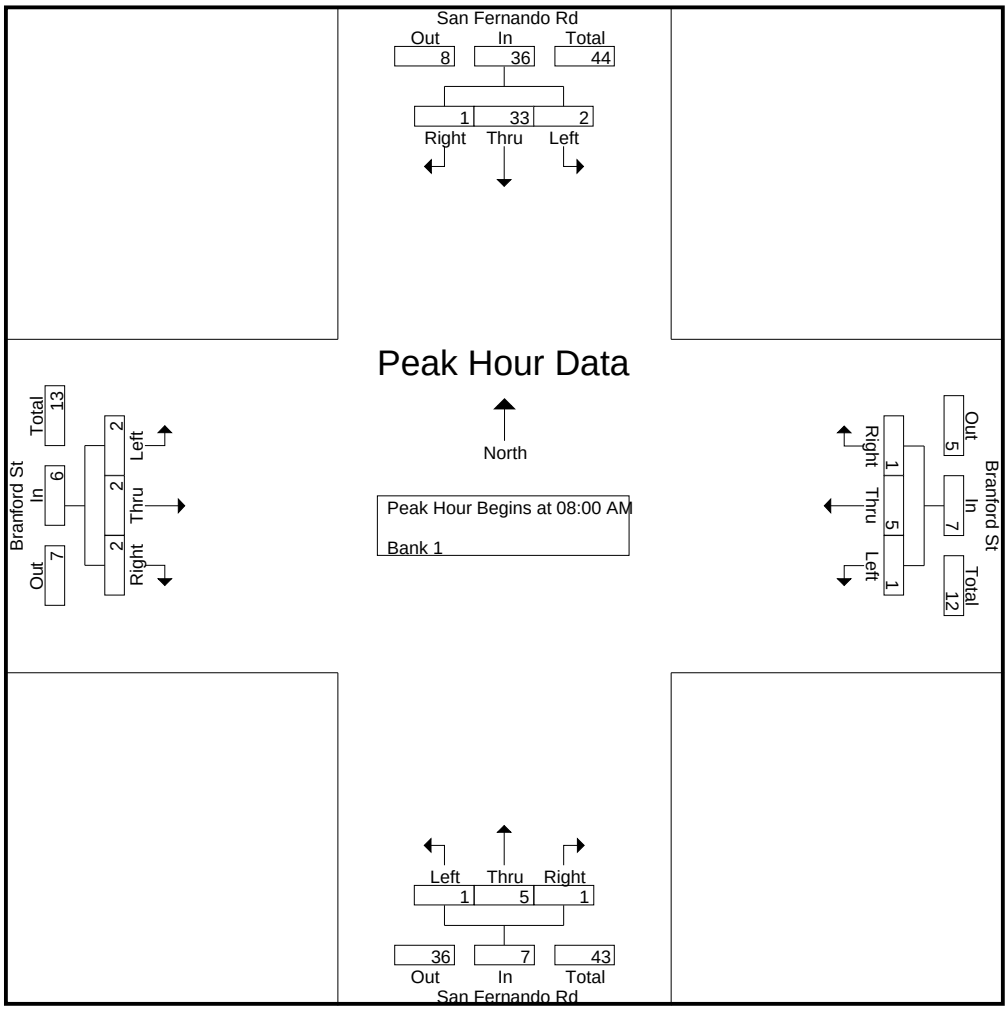

CITY TRAFFIC COUNTERS

626.991.7522

www.ctcounters.com

File Name : SanFBranford_3Axle
Site Code : 00000000
Start Date : 1/14/2014
Page No : 3

	San Fernando Rd Southbound				Branford St Westbound				San Fernando Rd Northbound				Branford St Eastbound				
Start Time	Left	Thru	Right	App. Total	Left	Thru	Right	App. Total	Left	Thru	Right	App. Total	Left	Thru	Right	App. Total	Int. Total
Peak Hour Analysis From 10:00 AM to 01:45 PM - Peak 1 of 1																	
Peak Hour for Entire Intersection Begins at 12:00 PM																	
12:00 PM	0	2	0	2	0	2	0	2	0	**2**	**2**	**4**	0	**4**	**2**	**6**	**14**
12:15 PM	0	**4**	0	**4**	0	1	0	1	0	0	1	1	0	1	2	3	9
12:30 PM	0	2	0	2	0	**3**	**1**	**4**	**2**	1	0	3	**1**	0	1	2	11
12:45 PM	**2**	1	**1**	4	0	1	0	1	1	1	0	2	0	4	0	4	11
Total Volume	2	9	1	12	0	7	1	8	3	4	3	10	1	9	5	15	45
% App. Total	16.7	75	8.3		0	87.5	12.5		30	40	30		6.7	60	33.3		
PHF	.250	.563	.250	.750	.000	.583	.250	.500	.375	.500	.375	.625	.250	.563	.625	.625	.804

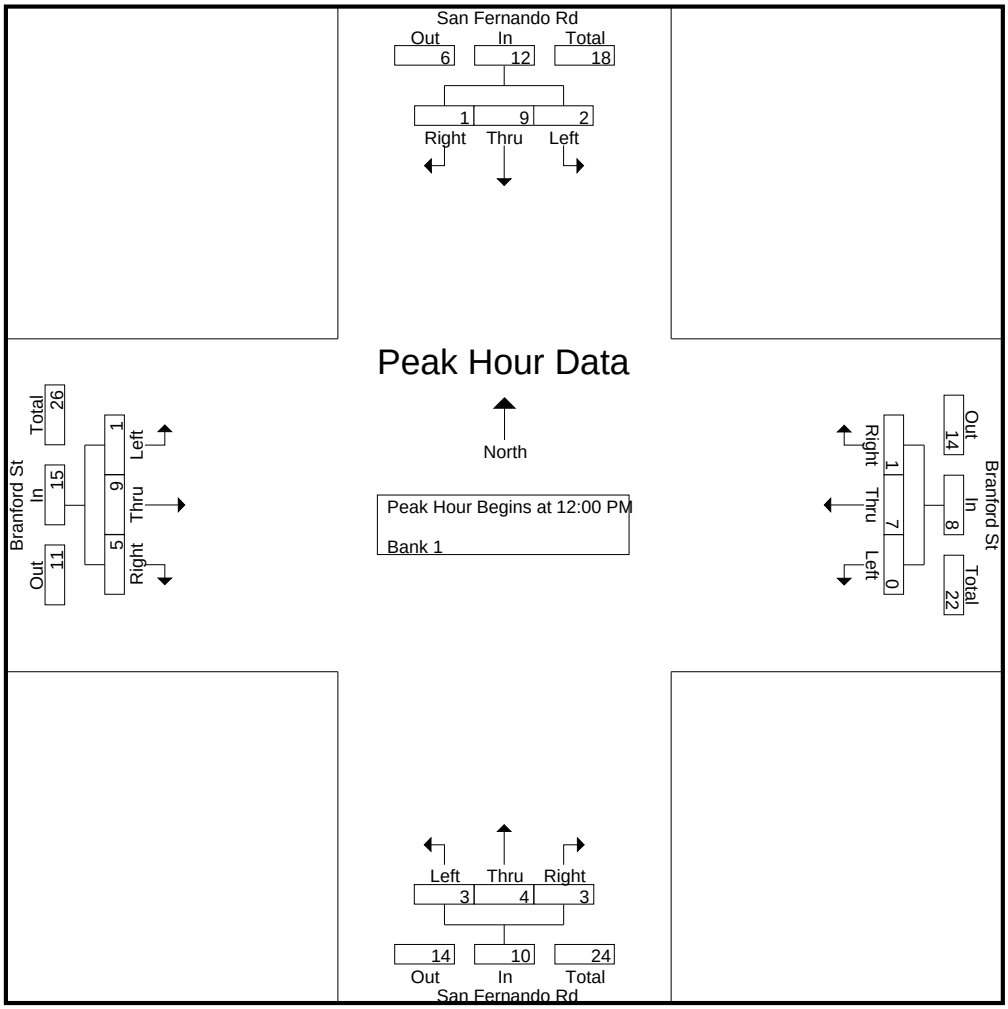

CITY TRAFFIC COUNTERS

626.991.7522

www.ctcounters.com

File Name : SanFBranford_3Axle
Site Code : 00000000
Start Date : 1/14/2014
Page No : 4

	San Fernando Rd Southbound				Branford St Westbound				San Fernando Rd Northbound				Branford St Eastbound				
Start Time	Left	Thru	Right	App. Total	Left	Thru	Right	App. Total	Left	Thru	Right	App. Total	Left	Thru	Right	App. Total	Int. Total
Peak Hour Analysis From 02:00 PM to 05:45 PM - Peak 1 of 1																	
Peak Hour for Entire Intersection Begins at 03:00 PM																	
03:00 PM	0	0	0	0	0	**1**	0	1	0	1	0	1	0	1	0	1	3
03:15 PM	0	0	0	0	**2**	0	**1**	**3**	**1**	1	**2**	**4**	0	1	0	1	**8**
03:30 PM	0	0	0	0	1	1	0	2	1	**2**	1	4	0	**2**	0	2	8
03:45 PM	0	**1**	0	**1**	1	0	0	1	0	1	1	2	0	2	**1**	**3**	7
Total Volume	0	1	0	1	4	2	1	7	2	5	4	11	0	6	1	7	26
% App. Total	0	100	0		57.1	28.6	14.3		18.2	45.5	36.4		0	85.7	14.3		
PHF	.000	.250	.000	.250	.500	.500	.250	.583	.500	.625	.500	.688	.000	.750	.250	.583	.813

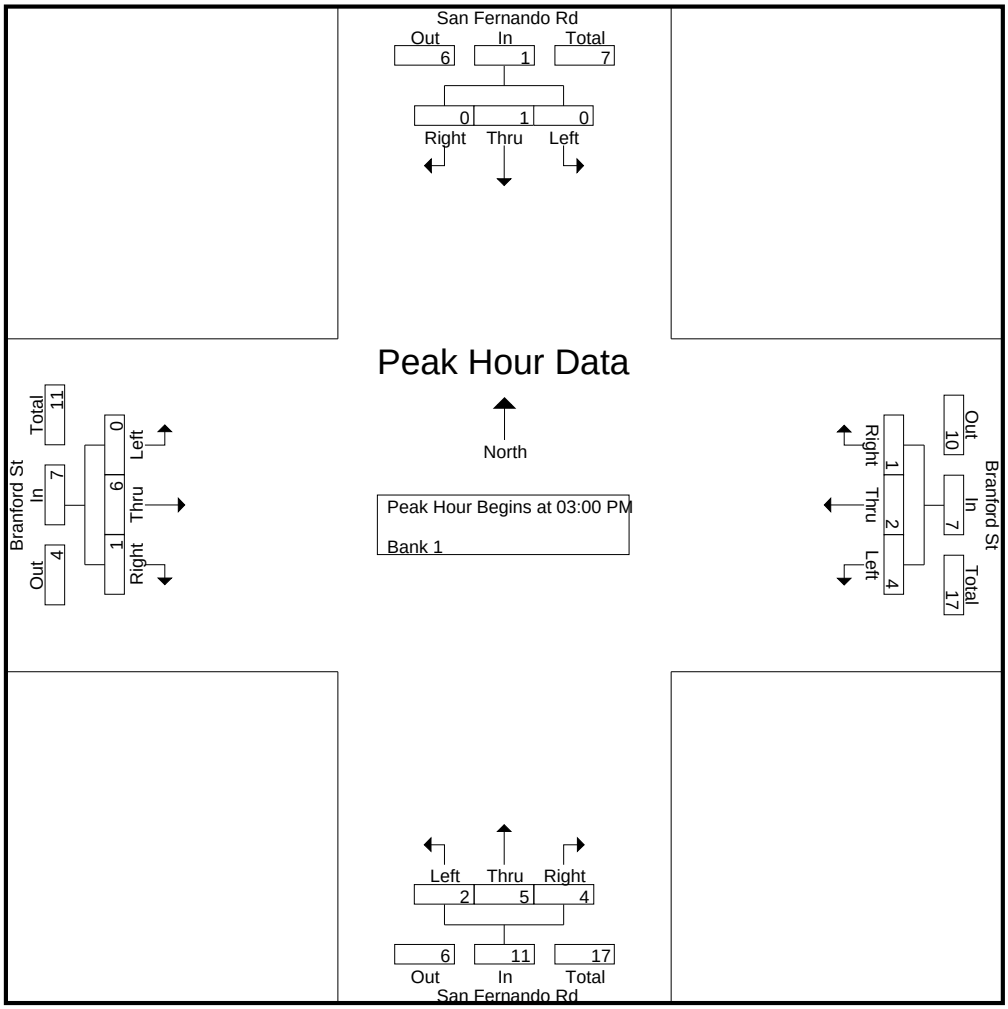

CITY TRAFFIC COUNTERS

626.991.7522

www.ctcounters.com

File Name : SanFBranford_4Axle
Site Code : 00000000
Start Date : 1/14/2014
Page No : 1

Groups Printed- Bank 2

	San Fernando Rd Southbound			Branford St Westbound			San Fernando Rd Northbound			Branford St Eastbound			
Start Time	Left	Thru	Right	Left	Thru	Right	Left	Thru	Right	Left	Thru	Right	Int. Total
07:30 AM	0	0	0	0	0	0	0	2	0	0	1	0	3
07:45 AM	0	0	0	0	0	0	0	2	0	0	0	0	2
Total	0	0	0	0	0	0	0	4	0	0	1	0	5
08:00 AM	0	1	0	0	0	0	0	2	0	0	0	0	3
08:15 AM	0	3	0	0	2	0	0	3	0	0	0	0	8
08:30 AM	0	2	0	0	0	0	0	0	0	0	0	0	2
Total	0	6	0	0	2	0	0	5	0	0	0	0	13
09:00 AM	0	0	0	0	0	0	0	2	0	0	0	0	2
09:15 AM	0	1	0	0	0	0	0	0	0	0	0	0	1
09:30 AM	0	1	0	0	0	0	0	2	0	0	0	0	3
09:45 AM	0	0	0	0	0	0	0	1	0	0	0	0	1
Total	0	2	0	0	0	0	0	5	0	0	0	0	7
12:15 PM	0	0	0	0	1	0	0	0	0	0	0	0	1
12:45 PM	0	0	1	0	1	0	0	1	0	0	0	0	3
Total	0	0	1	0	2	0	0	1	0	0	0	0	4
02:00 PM	0	0	0	0	0	0	0	0	1	0	0	0	1
Total	0	0	0	0	0	0	0	0	1	0	0	0	1
04:00 PM	0	0	0	0	0	0	0	1	0	0	2	0	3
04:45 PM	0	0	0	0	0	0	0	0	1	0	0	0	1
Total	0	0	0	0	0	0	0	1	1	0	2	0	4
05:00 PM	0	0	0	0	0	0	0	0	0	0	2	1	3
Total	0	0	0	0	0	0	0	0	0	0	2	1	3
Grand Total	0	8	1	0	4	0	0	16	2	0	5	1	37
Apprch %	0	88.9	11.1	0	100	0	0	88.9	11.1	0	83.3	16.7	
Total %	0	21.6	2.7	0	10.8	0	0	43.2	5.4	0	13.5	2.7	

CITY TRAFFIC COUNTERS

626.991.7522

www.ctcounters.com

File Name : SanFBranford_4Axle
Site Code : 00000000
Start Date : 1/14/2014
Page No : 2

	San Fernando Rd Southbound				Branford St Westbound				San Fernando Rd Northbound				Branford St Eastbound				
Start Time	Left	Thru	Right	App. Total	Left	Thru	Right	App. Total	Left	Thru	Right	App. Total	Left	Thru	Right	App. Total	Int. Total
Peak Hour Analysis From 07:00 AM to 09:45 AM - Peak 1 of 1																	
Peak Hour for Entire Intersection Begins at 07:30 AM																	
07:30 AM	0	0	0	0	0	0	0	0	0	2	0	2	0	**1**	0	**1**	3
07:45 AM	0	0	0	0	0	0	0	0	0	2	0	2	0	0	0	0	2
08:00 AM	0	1	0	1	0	0	0	0	0	2	0	2	0	0	0	0	3
08:15 AM	0	**3**	0	**3**	0	**2**	0	**2**	0	**3**	0	**3**	0	0	0	0	**8**
Total Volume	0	4	0	4	0	2	0	2	0	9	0	9	0	1	0	1	16
% App. Total	0	100	0		0	100	0		0	100	0		0	100	0		
PHF	.000	.333	.000	.333	.000	.250	.000	.250	.000	.750	.000	.750	.000	.250	.000	.250	.500

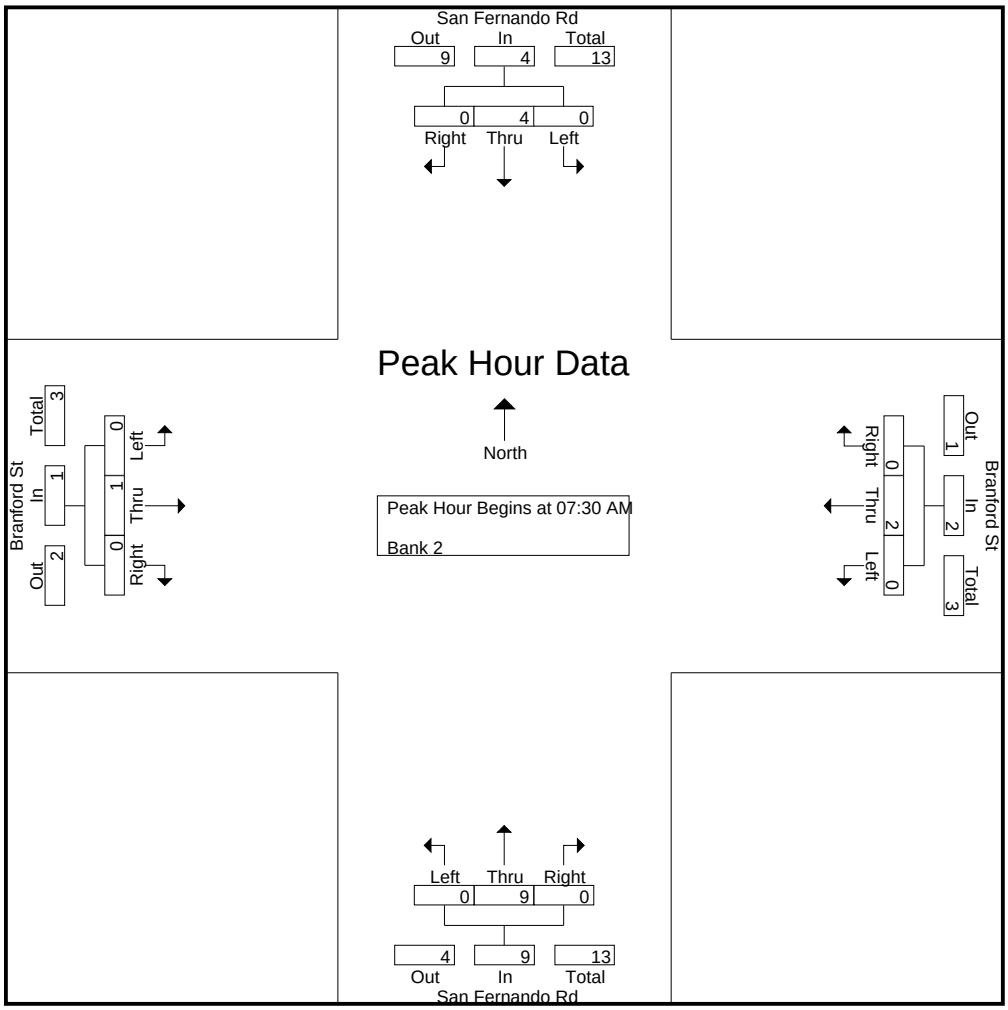

CITY TRAFFIC COUNTERS

626.991.7522

www.ctcounters.com

File Name : SanFBranford_4Axle
Site Code : 00000000
Start Date : 1/14/2014
Page No : 3

	San Fernando Rd Southbound				Branford St Westbound				San Fernando Rd Northbound				Branford St Eastbound				
Start Time	Left	Thru	Right	App. Total	Left	Thru	Right	App. Total	Left	Thru	Right	App. Total	Left	Thru	Right	App. Total	Int. Total
Peak Hour Analysis From 10:00 AM to 01:45 PM - Peak 1 of 1																	
Peak Hour for Entire Intersection Begins at 12:00 PM																	
12:00 PM	0	0	0	0	0	0	0	0	0	0	0	0	0	0	0	0	0
12:15 PM	0	0	0	0	0	**1**	0	**1**	0	0	0	0	0	0	0	0	1
12:30 PM	0	0	0	0	0	0	0	0	0	0	0	0	0	0	0	0	0
12:45 PM	0	0	**1**	**1**	0	1	0	1	0	**1**	0	**1**	0	0	0	0	**3**
Total Volume	0	0	1	1	0	2	0	2	0	1	0	1	0	0	0	0	4
% App. Total	0	0	100		0	100	0		0	100	0		0	0	0		
PHF	.000	.000	.250	.250	.000	.500	.000	.500	.000	.250	.000	.250	.000	.000	.000	.000	.333

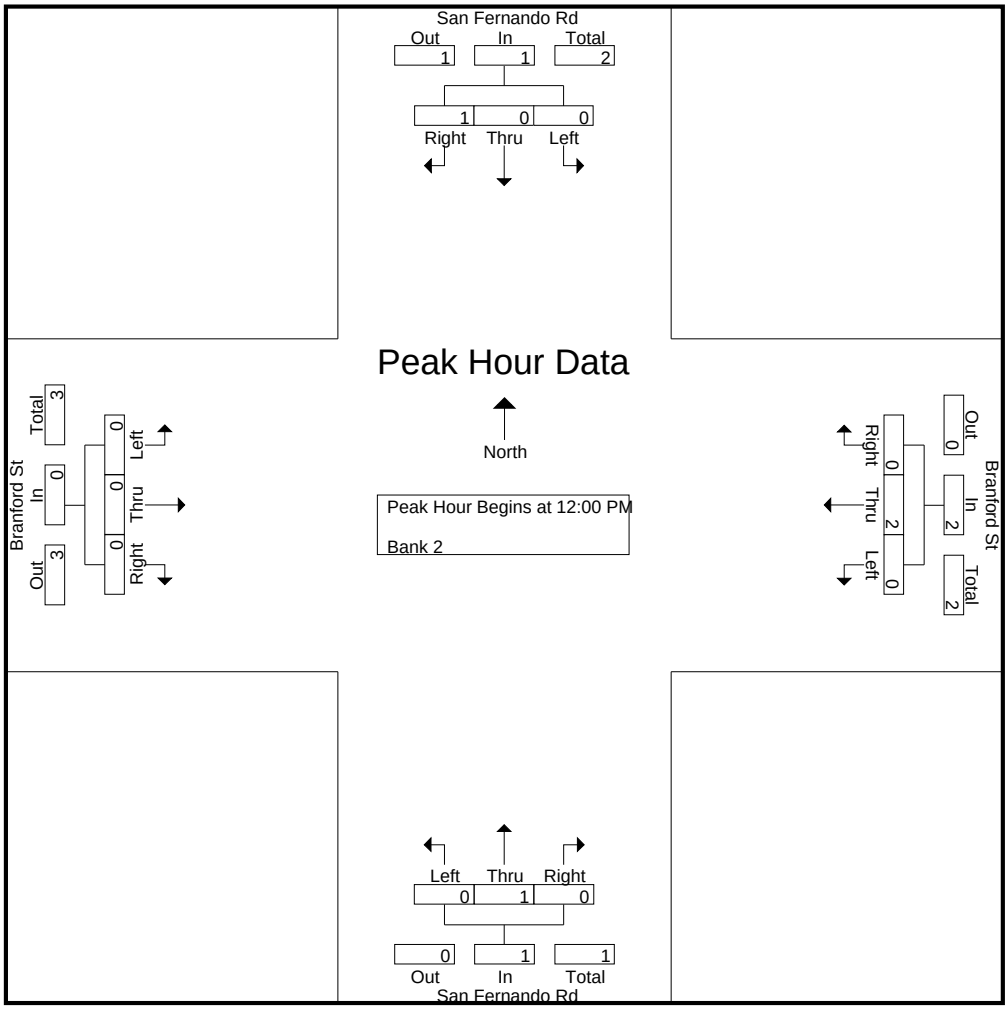

CITY TRAFFIC COUNTERS

626.991.7522

www.ctcounters.com

File Name : SanFBranford_4Axle
Site Code : 00000000
Start Date : 1/14/2014
Page No : 4

	San Fernando Rd Southbound				Branford St Westbound				San Fernando Rd Northbound				Branford St Eastbound				
Start Time	Left	Thru	Right	App. Total	Left	Thru	Right	App. Total	Left	Thru	Right	App. Total	Left	Thru	Right	App. Total	Int. Total
Peak Hour Analysis From 02:00 PM to 05:45 PM - Peak 1 of 1																	
Peak Hour for Entire Intersection Begins at 04:00 PM																	
04:00 PM	0	0	0	0	0	0	0	0	0	**1**	0	**1**	0	**2**	0	**2**	**3**
04:15 PM	0	0	0	0	0	0	0	0	0	0	0	0	0	0	0	0	0
04:30 PM	0	0	0	0	0	0	0	0	0	0	0	0	0	0	0	0	0
04:45 PM	0	0	0	0	0	0	0	0	0	0	**1**	1	0	0	0	0	1
Total Volume	0	0	0	0	0	0	0	0	0	1	1	2	0	2	0	2	4
% App. Total	0	0	0		0	0	0		0	50	50		0	100	0		
PHF	.000	.000	.000	.000	.000	.000	.000	.000	.000	.250	.250	.500	.000	.250	.000	.250	.333

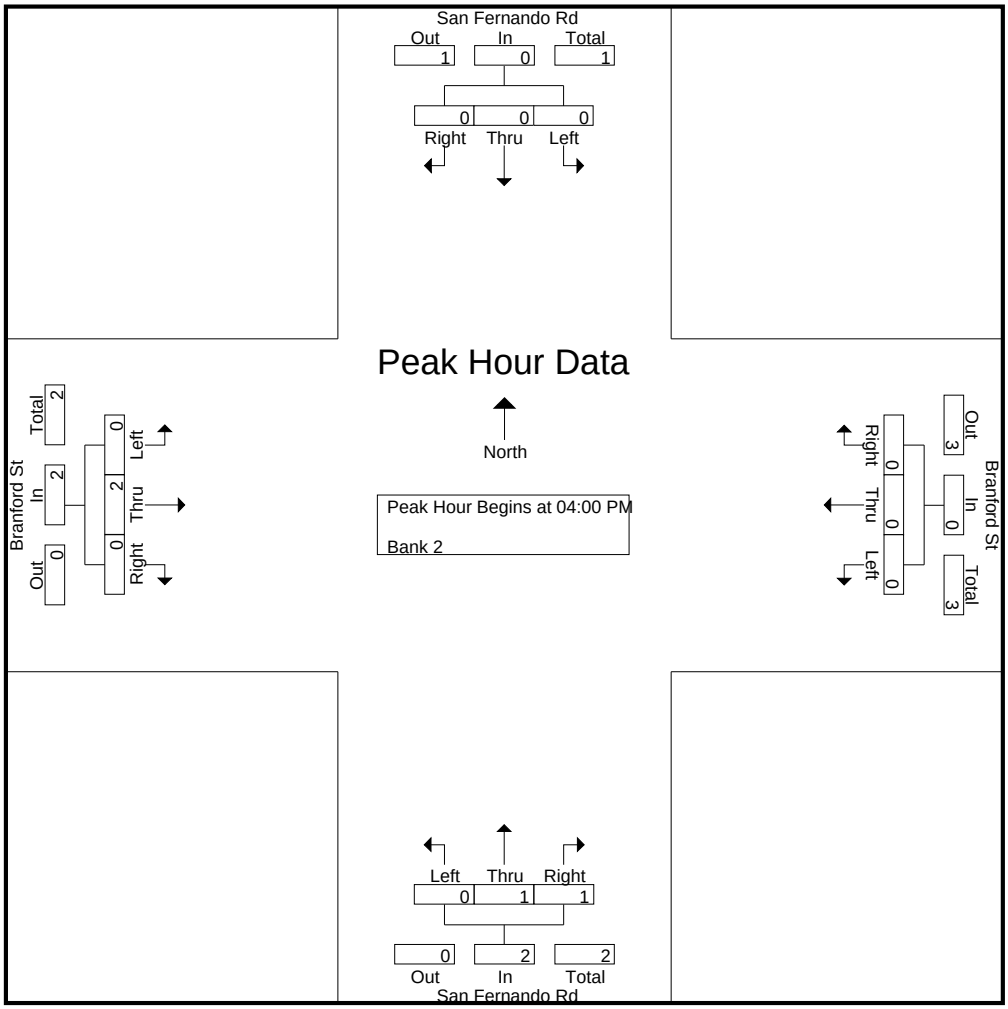

CITY TRAFFIC COUNTERS

626.991.7522

www.ctcounters.com

File Name : SanFBranford_5Axle
Site Code : 00000000
Start Date : 1/14/2014
Page No : 1

Groups Printed- Bank 2

	San Fernando Rd Southbound			Branford St Westbound			San Fernando Rd Northbound			Branford St Eastbound			
Start Time	Left	Thru	Right	Left	Thru	Right	Left	Thru	Right	Left	Thru	Right	Int. Total
07:00 AM	0	4	0	0	0	1	0	0	0	0	0	1	6
07:15 AM	1	1	0	1	1	0	0	1	0	0	1	0	6
07:30 AM	1	0	0	0	1	0	0	0	1	0	0	0	3
07:45 AM	0	1	0	0	0	0	1	1	0	0	1	0	4
Total	2	6	0	1	2	1	1	2	1	0	2	1	19
08:00 AM	0	1	0	0	1	0	0	0	0	0	0	0	2
08:15 AM	0	2	0	0	0	0	0	0	0	0	0	0	2
08:30 AM	0	2	0	0	0	0	0	0	0	1	1	0	4
08:45 AM	0	5	0	0	0	0	0	1	0	0	1	0	7
Total	0	10	0	0	1	0	0	1	0	1	2	0	15
09:00 AM	0	0	0	1	0	0	0	1	1	0	1	0	4
09:15 AM	0	0	0	0	0	0	0	1	0	0	1	0	2
09:30 AM	0	0	0	0	1	0	0	1	0	0	1	0	3
09:45 AM	0	0	0	1	1	0	0	1	0	0	0	0	3
Total	0	0	0	2	2	0	0	4	1	0	3	0	12
12:00 PM	0	0	0	0	1	0	0	0	0	0	1	2	4
12:15 PM	0	0	0	0	0	0	0	0	1	0	2	0	3
12:30 PM	0	1	0	2	0	0	0	2	0	0	0	0	5
12:45 PM	0	1	0	0	1	0	0	0	0	0	0	0	2
Total	0	2	0	2	2	0	0	2	1	0	3	2	14
01:00 PM	0	0	0	0	0	0	0	0	1	0	1	0	2
01:15 PM	1	1	0	0	1	0	0	1	1	0	0	0	5
01:30 PM	1	0	0	1	0	0	0	1	1	0	2	0	6
01:45 PM	0	0	0	1	2	0	0	0	0	0	0	0	3
Total	2	1	0	2	3	0	0	2	3	0	3	0	16
03:00 PM	0	0	0	0	0	0	0	2	0	0	1	0	3
03:15 PM	0	0	0	1	0	0	0	1	1	0	0	0	3
03:45 PM	0	0	0	1	0	0	0	1	0	0	1	0	3
Total	0	0	0	2	0	0	0	4	1	0	2	0	9
04:00 PM	0	0	0	1	0	0	0	2	0	0	1	0	4
04:30 PM	0	0	0	0	0	0	0	0	0	0	1	0	1
04:45 PM	0	0	0	1	0	0	0	0	1	0	1	0	3
Total	0	0	0	2	0	0	0	2	1	0	3	0	8
05:00 PM	0	0	0	0	0	0	0	1	0	0	0	0	1
05:15 PM	0	0	0	0	0	1	0	0	0	0	0	0	1
05:30 PM	0	0	0	1	2	0	0	0	0	0	0	0	3
Total	0	0	0	1	2	1	0	1	0	0	0	0	5
Grand Total	4	19	0	12	12	2	1	18	8	1	18	3	98
Apprch %	17.4	82.6	0	46.2	46.2	7.7	3.7	66.7	29.6	4.5	81.8	13.6	
Total %	4.1	19.4	0	12.2	12.2	2	1	18.4	8.2	1	18.4	3.1	

CITY TRAFFIC COUNTERS

626.991.7522

www.ctcounters.com

File Name : SanFBranford_5Axle
Site Code : 00000000
Start Date : 1/14/2014
Page No : 2

	San Fernando Rd Southbound				Branford St Westbound				San Fernando Rd Northbound				Branford St Eastbound				
Start Time	Left	Thru	Right	App. Total	Left	Thru	Right	App. Total	Left	Thru	Right	App. Total	Left	Thru	Right	App. Total	Int. Total
Peak Hour Analysis From 07:00 AM to 09:45 AM - Peak 1 of 1																	
Peak Hour for Entire Intersection Begins at 07:00 AM																	
07:00 AM	0	**4**	0	**4**	0	0	**1**	1	0	0	0	0	0	0	**1**	**1**	**6**
07:15 AM	**1**	1	0	2	**1**	**1**	0	**2**	0	**1**	0	1	0	**1**	0	1	6
07:30 AM	1	0	0	1	0	1	0	1	0	0	**1**	1	0	0	0	0	3
07:45 AM	0	1	0	1	0	0	0	0	**1**	1	0	**2**	0	1	0	1	4
Total Volume	2	6	0	8	1	2	1	4	1	2	1	4	0	2	1	3	19
% App. Total	25	75	0		25	50	25		25	50	25		0	66.7	33.3		
PHF	.500	.375	.000	.500	.250	.500	.250	.500	.250	.500	.250	.500	.000	.500	.250	.750	.792

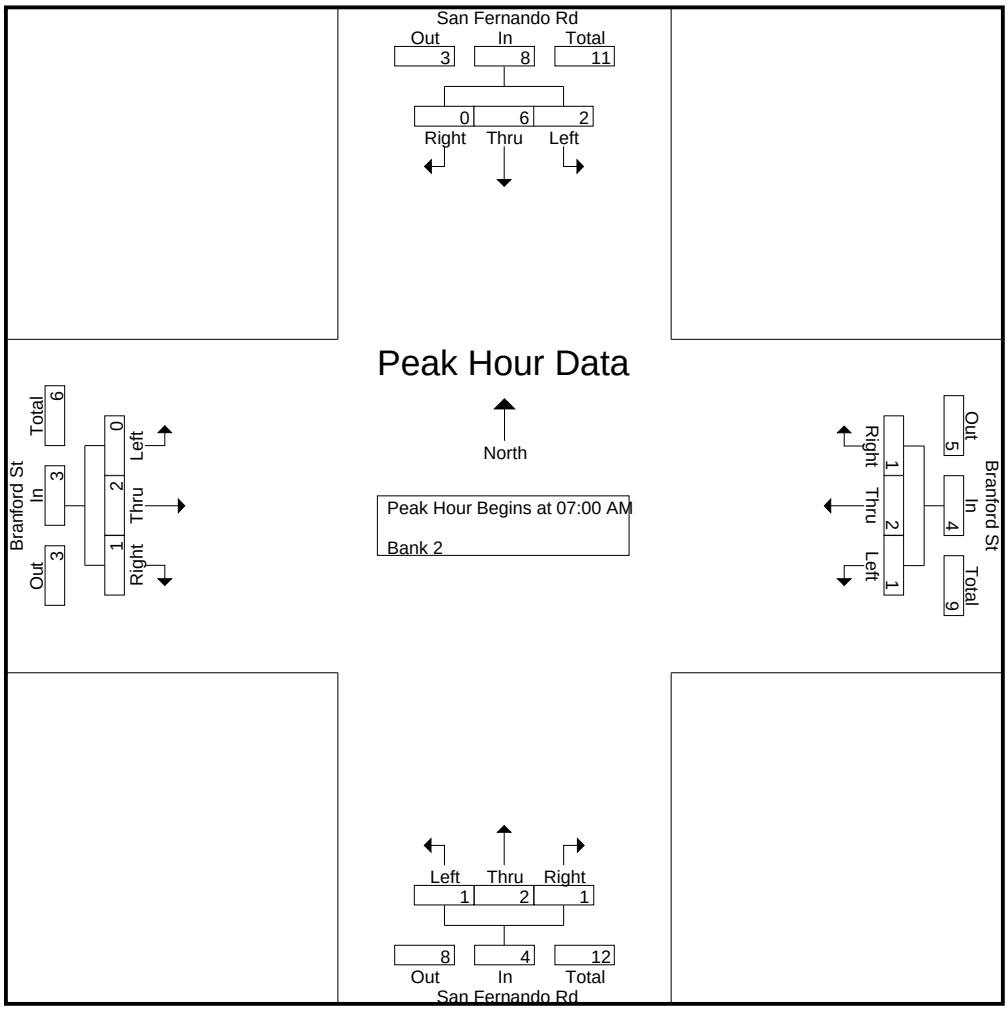

CITY TRAFFIC COUNTERS

626.991.7522

www.ctcounters.com

File Name : SanFBranford_5Axle
Site Code : 00000000
Start Date : 1/14/2014
Page No : 3

	San Fernando Rd Southbound				Branford St Westbound				San Fernando Rd Northbound				Branford St Eastbound				
Start Time	Left	Thru	Right	App. Total	Left	Thru	Right	App. Total	Left	Thru	Right	App. Total	Left	Thru	Right	App. Total	Int. Total
Peak Hour Analysis From 10:00 AM to 01:45 PM - Peak 1 of 1																	
Peak Hour for Entire Intersection Begins at 01:00 PM																	
01:00 PM	0	0	0	0	0	0	0	0	0	0	**1**	1	0	1	0	1	2
01:15 PM	**1**	**1**	0	**2**	0	1	0	1	0	**1**	1	**2**	0	0	0	0	5
01:30 PM	1	0	0	1	**1**	0	0	1	0	1	1	2	0	**2**	0	**2**	**6**
01:45 PM	0	0	0	0	1	**2**	0	**3**	0	0	0	0	0	0	0	0	3
Total Volume	2	1	0	3	2	3	0	5	0	2	3	5	0	3	0	3	16
% App. Total	66.7	33.3	0		40	60	0		0	40	60		0	100	0		
PHF	.500	.250	.000	.375	.500	.375	.000	.417	.000	.500	.750	.625	.000	.375	.000	.375	.667

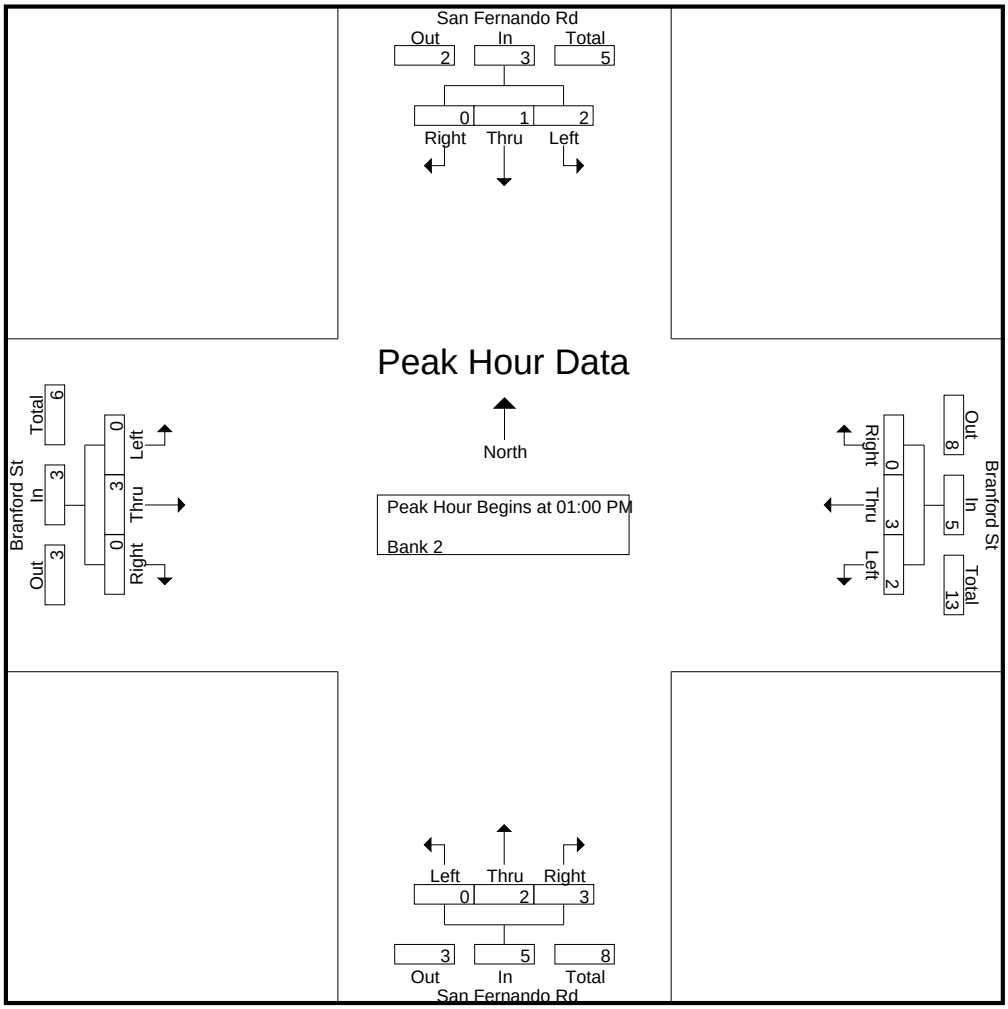

CITY TRAFFIC COUNTERS

626.991.7522

www.ctcounters.com

File Name : SanFBranford_5Axle
Site Code : 00000000
Start Date : 1/14/2014
Page No : 4

	San Fernando Rd Southbound				Branford St Westbound				San Fernando Rd Northbound				Branford St Eastbound				
Start Time	Left	Thru	Right	App. Total	Left	Thru	Right	App. Total	Left	Thru	Right	App. Total	Left	Thru	Right	App. Total	Int. Total
Peak Hour Analysis From 02:00 PM to 05:45 PM - Peak 1 of 1																	
Peak Hour for Entire Intersection Begins at 03:15 PM																	
03:15 PM	0	0	0	0	**1**	0	0	**1**	0	1	**1**	**2**	0	0	0	0	3
03:30 PM	0	0	0	0	0	0	0	0	0	0	0	0	0	0	0	0	0
03:45 PM	0	0	0	0	1	0	0	1	0	1	0	1	0	**1**	0	**1**	3
04:00 PM	0	0	0	0	1	0	0	1	0	**2**	0	2	0	1	0	1	**4**
Total Volume	0	0	0	0	3	0	0	3	0	4	1	5	0	2	0	2	10
% App. Total	0	0	0		100	0	0		0	80	20		0	100	0		
PHF	.000	.000	.000	.000	.750	.000	.000	.750	.000	.500	.250	.625	.000	.500	.000	.500	.625

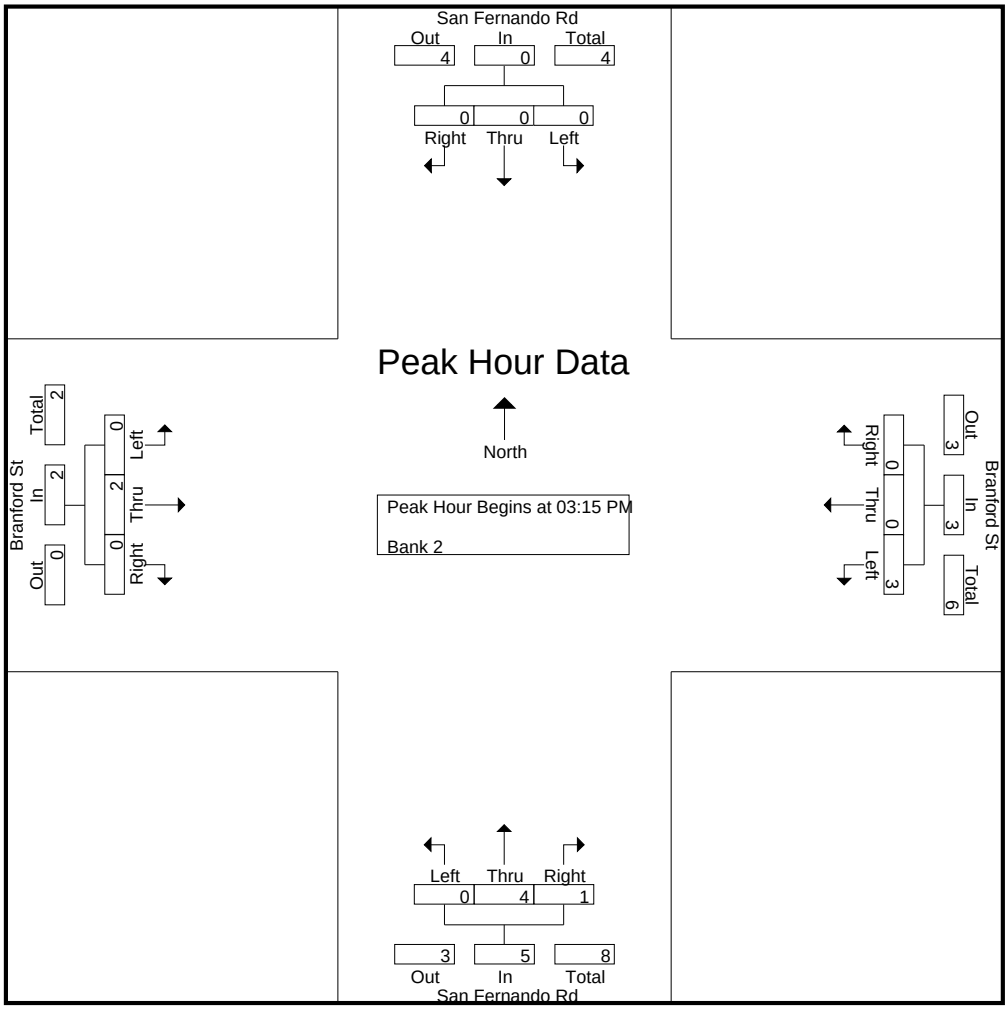

CITY TRAFFIC COUNTERS

626.991.7522

www.ctcounters.com

File Name : 5NBLC_Jerome
Site Code : 00000000
Start Date : 1/15/2014
Page No : 1

Groups Printed- Unshifted

	Laurel Canyon Blvd Southbound			Jerome St Westbound			Laurel Canyon Blvd Northbound			I-5 NB Ramp Eastbound			
Start Time	Left	Thru	Right	Left	Thru	Right	Left	Thru	Right	Left	Thru	Right	Int. Total
07:00 AM	6	270	0	6	0	7	0	77	5	14	1	38	424
07:15 AM	7	280	0	8	0	11	0	108	5	10	1	48	478
07:30 AM	20	291	0	7	0	18	0	116	4	2	1	66	525
07:45 AM	32	277	0	4	0	29	0	122	6	8	0	62	540
Total	65	1118	0	25	0	65	0	423	20	34	3	214	1967
08:00 AM	19	250	0	2	0	12	0	112	3	3	1	63	465
08:15 AM	14	257	0	4	0	3	0	89	3	10	2	53	435
08:30 AM	3	264	0	3	0	1	0	72	5	15	3	42	408
08:45 AM	6	202	0	4	0	3	0	81	3	8	0	41	348
Total	42	973	0	13	0	19	0	354	14	36	6	199	1656
09:00 AM	1	186	0	1	0	3	0	61	2	15	1	28	298
09:15 AM	5	137	0	4	0	4	0	59	1	14	0	31	255
09:30 AM	5	93	0	3	0	7	0	53	2	6	0	29	198
09:45 AM	1	77	0	3	0	3	0	64	8	2	1	26	185
Total	12	493	0	11	0	17	0	237	13	37	2	114	936
12:00 PM	9	84	0	2	0	9	0	94	4	5	0	26	233
12:15 PM	11	118	0	5	0	7	0	77	8	7	0	35	268
12:30 PM	11	109	0	1	0	5	0	97	8	0	3	21	255
12:45 PM	5	105	0	7	0	3	0	77	4	6	1	21	229
Total	36	416	0	15	0	24	0	345	24	18	4	103	985
01:00 PM	1	95	0	4	0	7	0	87	4	0	1	39	238
01:15 PM	6	95	0	1	0	14	0	60	4	4	2	39	225
01:30 PM	5	76	0	2	0	1	0	80	3	7	0	36	210
01:45 PM	8	108	0	0	0	5	0	110	8	1	3	35	278
Total	20	374	0	7	0	27	0	337	19	12	6	149	951
03:00 PM	7	148	0	5	0	7	0	184	9	11	4	50	425
03:15 PM	5	124	0	7	0	14	0	191	11	16	4	62	434
03:30 PM	17	141	0	4	0	15	0	184	10	10	3	54	438
03:45 PM	10	151	0	1	0	14	0	162	2	7	1	60	408
Total	39	564	0	17	0	50	0	721	32	44	12	226	1705
04:00 PM	6	161	0	5	0	13	0	183	6	13	4	38	429
04:15 PM	6	131	0	0	0	15	0	187	3	3	4	50	399
04:30 PM	13	143	0	3	0	14	0	183	7	12	5	39	419
04:45 PM	6	175	0	8	0	11	0	219	10	9	1	53	492
Total	31	610	0	16	0	53	0	772	26	37	14	180	1739
05:00 PM	14	181	0	8	0	18	0	214	6	14	2	45	502
05:15 PM	10	169	0	6	0	10	0	226	8	6	2	40	477
05:30 PM	9	166	0	1	0	10	0	238	10	9	3	47	493
05:45 PM	8	161	0	4	0	5	0	250	4	11	5	47	495
Total	41	677	0	19	0	43	0	928	28	40	12	179	1967
Grand Total	286	5225	0	123	0	298	0	4117	176	258	59	1364	11906
Apprch %	5.2	94.8	0	29.2	0	70.8	0	95.9	4.1	15.3	3.5	81.1	
Total %	2.4	43.9	0	1	0	2.5	0	34.6	1.5	2.2	0.5	11.5	

CITY TRAFFIC COUNTERS

626.991.7522

www.ctcounters.com

File Name : 5NBLC_Jerome
Site Code : 00000000
Start Date : 1/15/2014
Page No : 2

	Laurel Canyon Blvd Southbound				Jerome St Westbound				Laurel Canyon Blvd Northbound				I-5 NB Ramp Eastbound				
Start Time	Left	Thru	Right	App. Total	Left	Thru	Right	App. Total	Left	Thru	Right	App. Total	Left	Thru	Right	App. Total	Int. Total
Peak Hour Analysis From 07:00 AM to 09:45 AM - Peak 1 of 1																	
Peak Hour for Entire Intersection Begins at 07:15 AM																	
07:15 AM	7	280	0	287	**8**	0	11	19	0	108	5	113	**10**	**1**	48	59	478
07:30 AM	20	**291**	0	**311**	7	0	18	25	0	116	4	120	2	1	**66**	69	525
07:45 AM	**32**	277	0	309	4	0	**29**	**33**	0	**122**	**6**	**128**	8	0	62	**70**	**540**
08:00 AM	19	250	0	269	2	0	12	14	0	112	3	115	3	1	63	67	465
Total Volume	78	1098	0	1176	21	0	70	91	0	458	18	476	23	3	239	265	2008
% App. Total	6.6	93.4	0		23.1	0	76.9		0	96.2	3.8		8.7	1.1	90.2		
PHF	.609	.943	.000	.945	.656	.000	.603	.689	.000	.939	.750	.930	.575	.750	.905	.946	.930

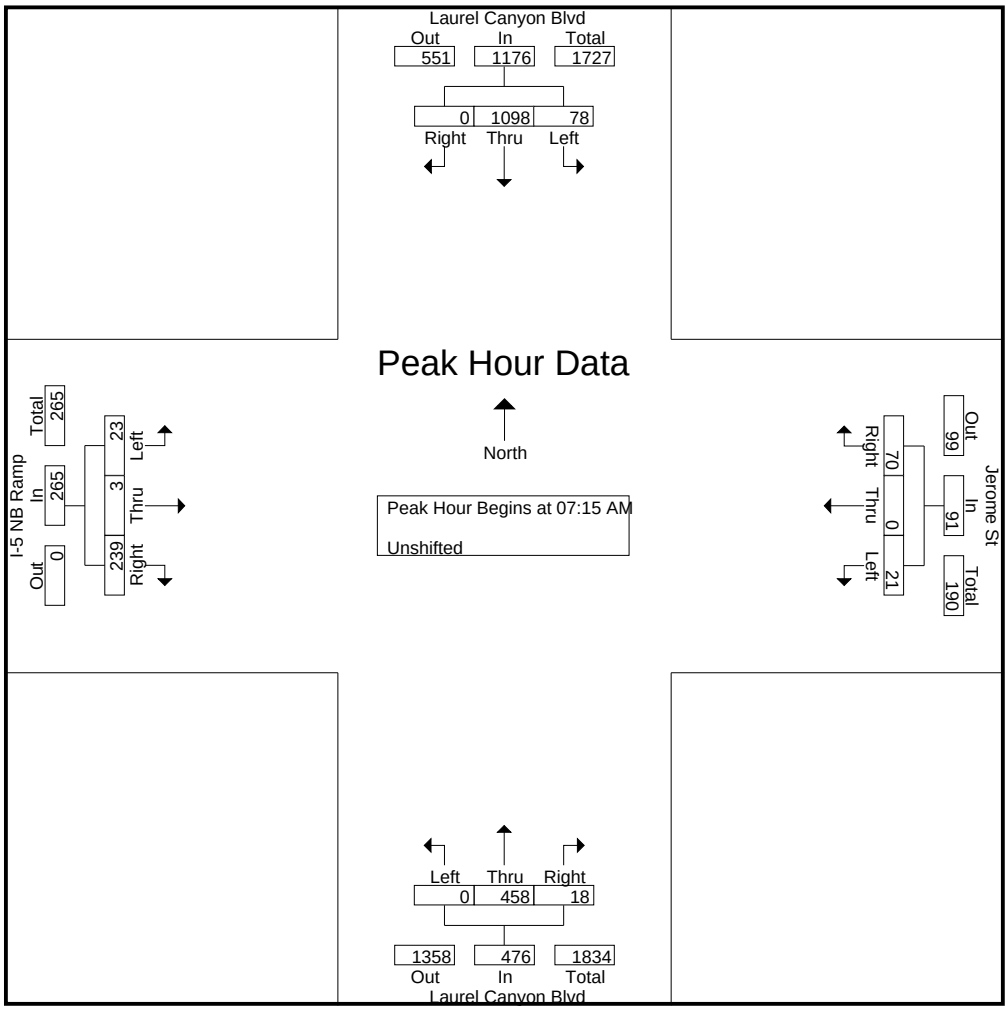

CITY TRAFFIC COUNTERS

626.991.7522

www.ctcounters.com

File Name : 5NBLC_Jerome
Site Code : 00000000
Start Date : 1/15/2014
Page No : 3

	Laurel Canyon Blvd Southbound				Jerome St Westbound				Laurel Canyon Blvd Northbound				I-5 NB Ramp Eastbound				
Start Time	Left	Thru	Right	App. Total	Left	Thru	Right	App. Total	Left	Thru	Right	App. Total	Left	Thru	Right	App. Total	Int. Total
Peak Hour Analysis From 10:00 AM to 01:45 PM - Peak 1 of 1																	
Peak Hour for Entire Intersection Begins at 12:15 PM																	
12:15 PM	**11**	**118**	0	**129**	5	0	**7**	**12**	0	77	**8**	85	**7**	0	35	**42**	**268**
12:30 PM	11	109	0	120	1	0	5	6	0	**97**	8	**105**	0	**3**	21	24	255
12:45 PM	5	105	0	110	**7**	0	3	10	0	77	4	81	6	1	21	28	229
01:00 PM	1	95	0	96	4	0	7	11	0	87	4	91	0	1	**39**	40	238
Total Volume	28	427	0	455	17	0	22	39	0	338	24	362	13	5	116	134	990
% App. Total	6.2	93.8	0		43.6	0	56.4		0	93.4	6.6		9.7	3.7	86.6		
PHF	.636	.905	.000	.882	.607	.000	.786	.813	.000	.871	.750	.862	.464	.417	.744	.798	.924

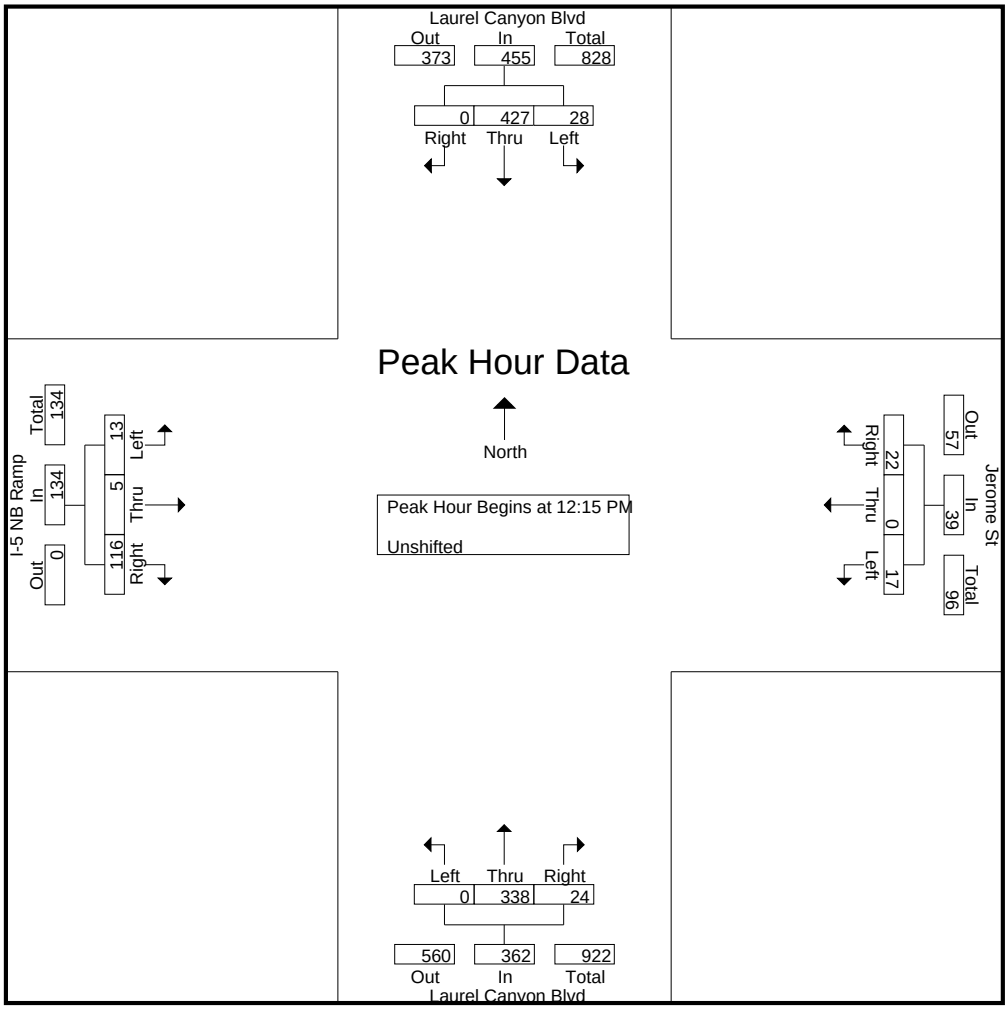

CITY TRAFFIC COUNTERS

626.991.7522

www.ctcounters.com

File Name : 5NBLC_Jerome
Site Code : 00000000
Start Date : 1/15/2014
Page No : 4

	Laurel Canyon Blvd Southbound				Jerome St Westbound				Laurel Canyon Blvd Northbound				I-5 NB Ramp Eastbound				
Start Time	Left	Thru	Right	App. Total	Left	Thru	Right	App. Total	Left	Thru	Right	App. Total	Left	Thru	Right	App. Total	Int. Total
Peak Hour Analysis From 02:00 PM to 05:45 PM - Peak 1 of 1																	
Peak Hour for Entire Intersection Begins at 05:00 PM																	
05:00 PM	**14**	**181**	0	**195**	**8**	0	**18**	**26**	0	214	6	220	**14**	2	45	61	**502**
05:15 PM	10	169	0	179	6	0	10	16	0	226	8	234	6	2	40	48	477
05:30 PM	9	166	0	175	1	0	10	11	0	238	**10**	248	9	3	**47**	59	493
05:45 PM	8	161	0	169	4	0	5	9	0	**250**	4	**254**	11	**5**	47	**63**	495
Total Volume	41	677	0	718	19	0	43	62	0	928	28	956	40	12	179	231	1967
% App. Total	5.7	94.3	0		30.6	0	69.4		0	97.1	2.9		17.3	5.2	77.5		
PHF	.732	.935	.000	.921	.594	.000	.597	.596	.000	.928	.700	.941	.714	.600	.952	.917	.980

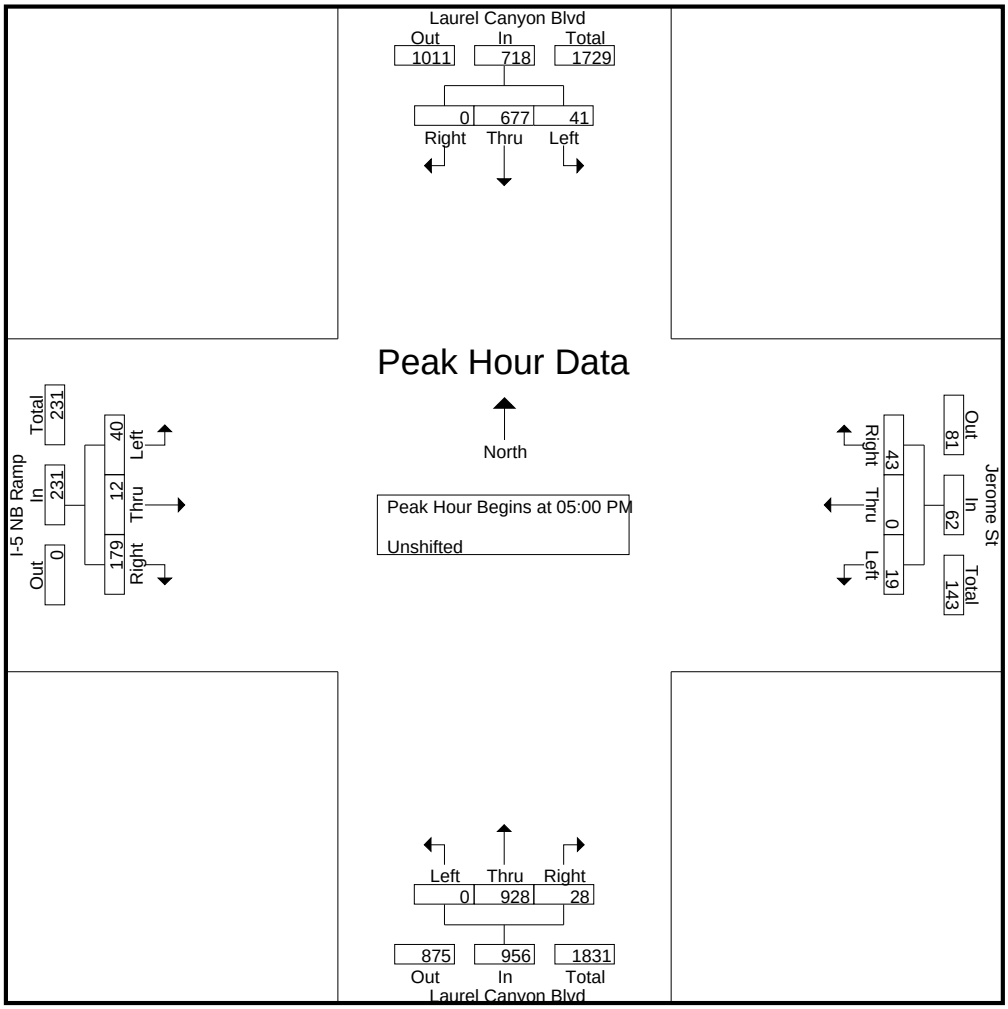

CITY TRAFFIC COUNTERS

626.991.7522

www.ctcounters.com

File Name : 5NBLC_Jerome_MC
Site Code : 00000000
Start Date : 1/15/2014
Page No : 1

Groups Printed- Bank 2

	Laurel Canyon Blvd Southbound			Jerome St Westbound			Laurel Canyon Blvd Northbound			I-5 NB Ramp Eastbound			
Start Time	Left	Thru	Right	Left	Thru	Right	Left	Thru	Right	Left	Thru	Right	Int. Total
07:00 AM	0	0	0	0	0	0	0	1	1	0	0	0	2
07:45 AM	0	0	0	0	0	0	0	1	0	0	0	0	1
Total	0	0	0	0	0	0	0	2	1	0	0	0	3
08:15 AM	0	1	0	0	0	0	0	0	0	0	0	0	1
08:30 AM	0	1	0	0	0	0	0	0	0	0	0	0	1
Total	0	2	0	0	0	0	0	0	0	0	0	0	2
09:00 AM	0	1	0	0	0	0	0	0	0	0	0	0	1
09:45 AM	0	0	0	0	0	0	0	1	0	0	0	0	1
Total	0	1	0	0	0	0	0	1	0	0	0	0	2
12:30 PM	0	1	0	0	0	0	0	0	0	0	0	0	1
Total	0	1	0	0	0	0	0	0	0	0	0	0	1
03:00 PM	0	1	0	0	0	0	0	0	0	0	0	0	1
03:45 PM	0	1	0	0	0	0	0	0	0	1	0	0	2
Total	0	2	0	0	0	0	0	0	0	1	0	0	3
04:00 PM	0	1	0	0	0	0	0	0	0	0	0	0	1
04:30 PM	0	0	0	0	0	0	0	1	0	0	0	0	1
04:45 PM	0	0	0	1	0	0	0	0	0	0	0	1	2
Total	0	1	0	1	0	0	0	1	0	0	0	1	4
Grand Total	0	7	0	1	0	0	0	4	1	1	0	1	15
Apprch %	0	100	0	100	0	0	0	80	20	50	0	50	
Total %	0	46.7	0	6.7	0	0	0	26.7	6.7	6.7	0	6.7	

CITY TRAFFIC COUNTERS

626.991.7522

www.ctcounters.com

File Name : 5NBLC_Jerome_MC
Site Code : 00000000
Start Date : 1/15/2014
Page No : 2

	Laurel Canyon Blvd Southbound				Jerome St Westbound				Laurel Canyon Blvd Northbound				I-5 NB Ramp Eastbound				
Start Time	Left	Thru	Right	App. Total	Left	Thru	Right	App. Total	Left	Thru	Right	App. Total	Left	Thru	Right	App. Total	Int. Total
Peak Hour Analysis From 07:00 AM to 09:45 AM - Peak 1 of 1																	
Peak Hour for Entire Intersection Begins at 07:00 AM																	
07:00 AM	0	0	0	0	0	0	0	0	0	**1**	**1**	**2**	0	0	0	0	**2**
07:15 AM	0	0	0	0	0	0	0	0	0	0	0	0	0	0	0	0	0
07:30 AM	0	0	0	0	0	0	0	0	0	0	0	0	0	0	0	0	0
07:45 AM	0	0	0	0	0	0	0	0	0	1	0	1	0	0	0	0	1
Total Volume	0	0	0	0	0	0	0	0	0	2	1	3	0	0	0	0	3
% App. Total	0	0	0		0	0	0		0	66.7	33.3		0	0	0		
PHF	.000	.000	.000	.000	.000	.000	.000	.000	.000	.500	.250	.375	.000	.000	.000	.000	.375

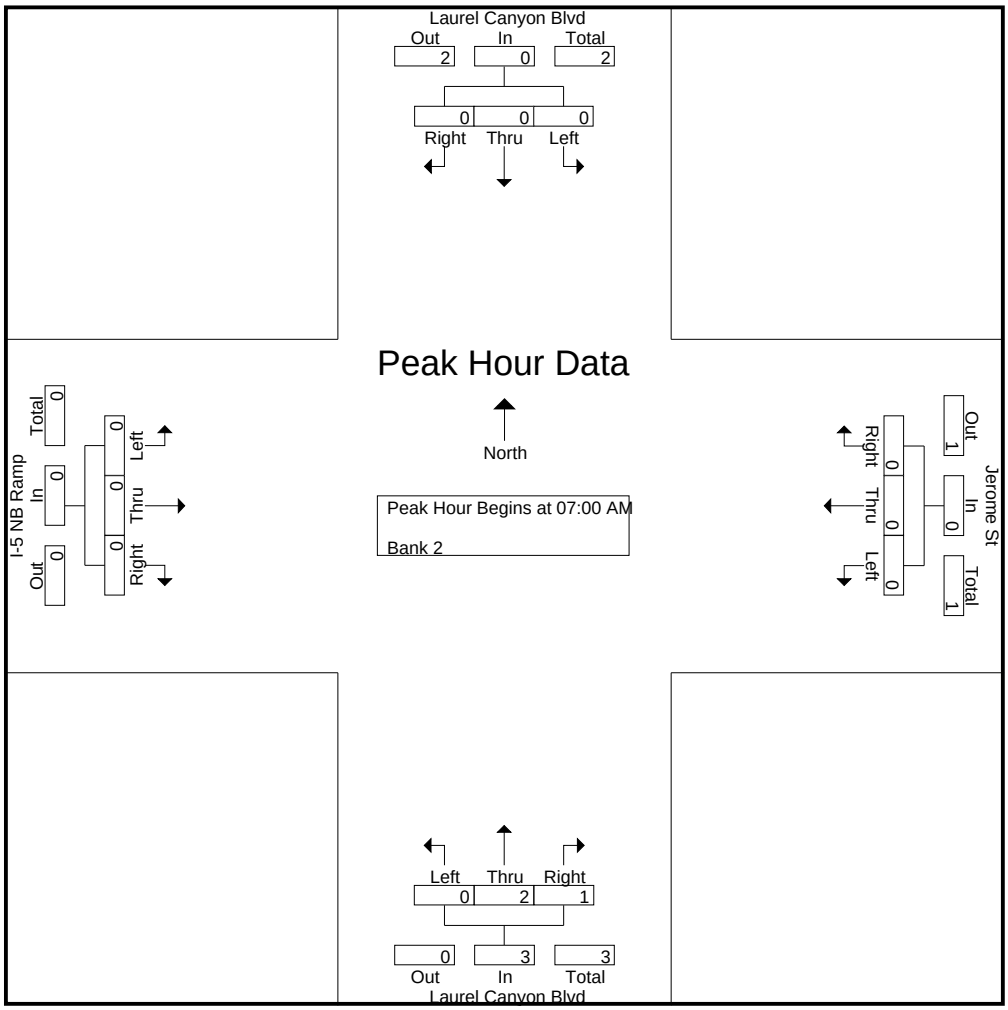

CITY TRAFFIC COUNTERS

626.991.7522

www.ctcounters.com

File Name : 5NBLC_Jerome_MC
Site Code : 00000000
Start Date : 1/15/2014
Page No : 3

	Laurel Canyon Blvd Southbound				Jerome St Westbound				Laurel Canyon Blvd Northbound				I-5 NB Ramp Eastbound				
Start Time	Left	Thru	Right	App. Total	Left	Thru	Right	App. Total	Left	Thru	Right	App. Total	Left	Thru	Right	App. Total	Int. Total
Peak Hour Analysis From 10:00 AM to 01:45 PM - Peak 1 of 1																	
Peak Hour for Entire Intersection Begins at 11:45 AM																	
11:45 AM	0	0	0	0	0	0	0	0	0	0	0	0	0	0	0	0	0
12:00 PM	0	0	0	0	0	0	0	0	0	0	0	0	0	0	0	0	0
12:15 PM	0	0	0	0	0	0	0	0	0	0	0	0	0	0	0	0	0
12:30 PM	0	**1**	0	**1**	0	0	0	0	0	0	0	0	0	0	0	0	**1**
Total Volume	0	1	0	1	0	0	0	0	0	0	0	0	0	0	0	0	1
% App. Total	0	100	0		0	0	0		0	0	0		0	0	0		
PHF	.000	.250	.000	.250	.000	.000	.000	.000	.000	.000	.000	.000	.000	.000	.000	.000	.250

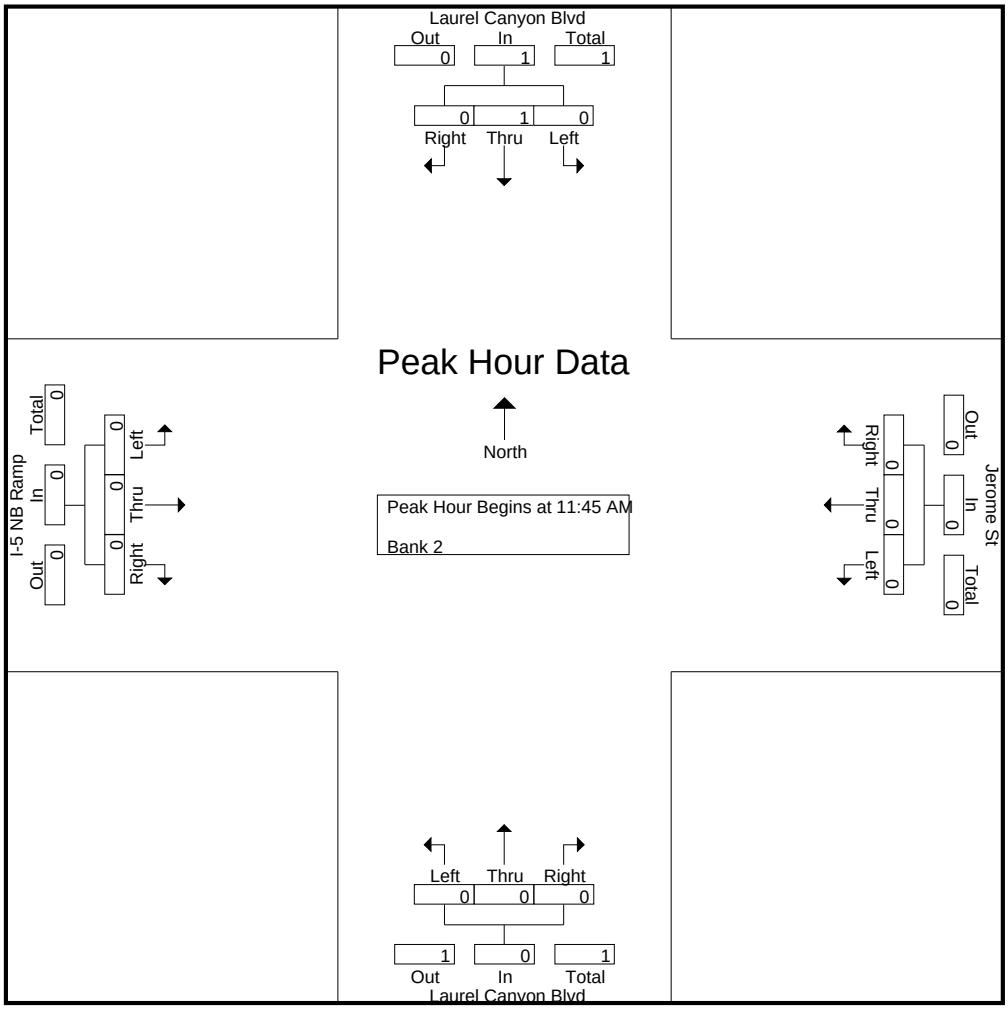

CITY TRAFFIC COUNTERS

626.991.7522

www.ctcounters.com

File Name : 5NBLC_Jerome_MC
Site Code : 00000000
Start Date : 1/15/2014
Page No : 4

	Laurel Canyon Blvd Southbound				Jerome St Westbound				Laurel Canyon Blvd Northbound				I-5 NB Ramp Eastbound				
Start Time	Left	Thru	Right	App. Total	Left	Thru	Right	App. Total	Left	Thru	Right	App. Total	Left	Thru	Right	App. Total	Int. Total
Peak Hour Analysis From 02:00 PM to 05:45 PM - Peak 1 of 1																	
Peak Hour for Entire Intersection Begins at 03:45 PM																	
03:45 PM	0	**1**	0	**1**	0	0	0	0	0	0	0	0	**1**	0	0	**1**	**2**
04:00 PM	0	1	0	1	0	0	0	0	0	0	0	0	0	0	0	0	1
04:15 PM	0	0	0	0	0	0	0	0	0	0	0	0	0	0	0	0	0
04:30 PM	0	0	0	0	0	0	0	0	0	**1**	0	**1**	0	0	0	0	1
Total Volume	0	2	0	2	0	0	0	0	0	1	0	1	1	0	0	1	4
% App. Total	0	100	0		0	0	0		0	100	0		100	0	0		
PHF	.000	.500	.000	.500	.000	.000	.000	.000	.000	.250	.000	.250	.250	.000	.000	.250	.500

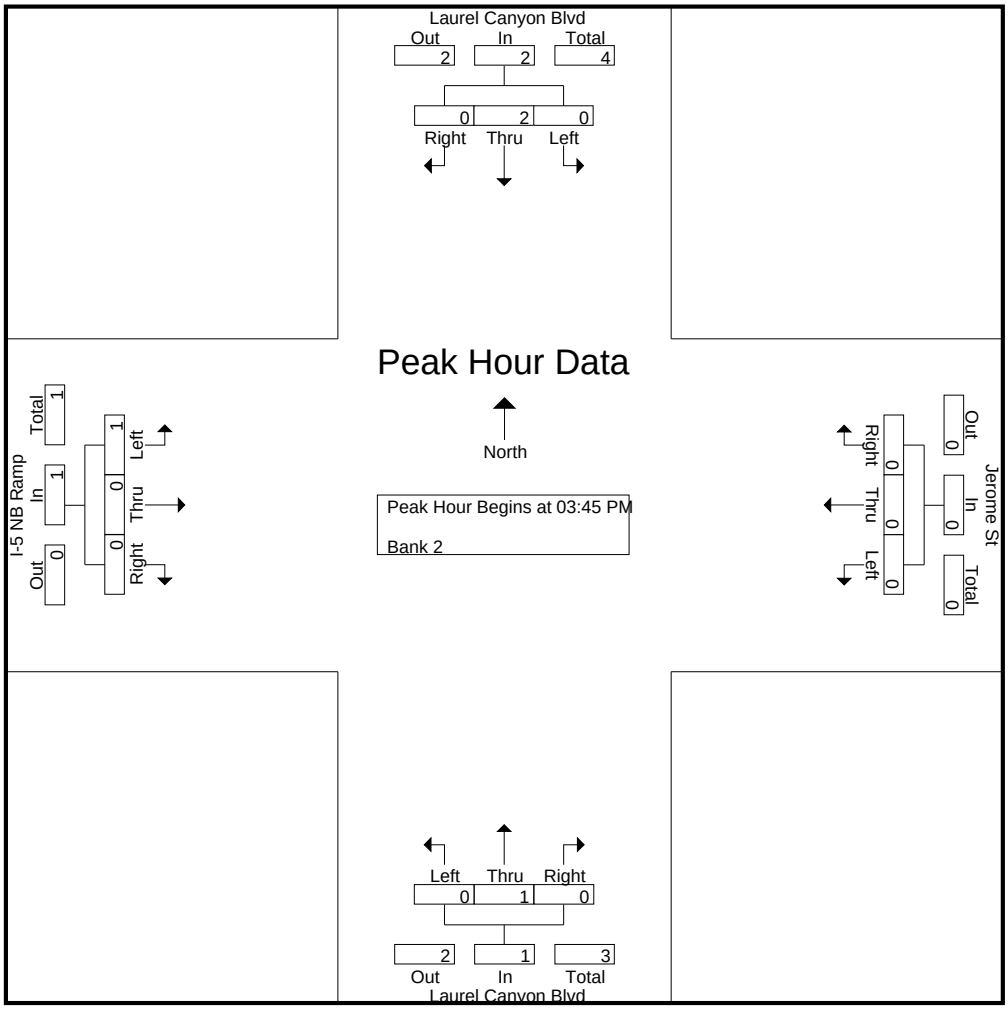

CITY TRAFFIC COUNTERS

626.991.7522

www.ctcounters.com

File Name : 5NBLC_Jerome_Bus
Site Code : 00000000
Start Date : 1/15/2014
Page No : 1

Groups Printed- Bank 1

	Laurel Canyon Blvd Southbound			Jerome St Westbound			Laurel Canyon Blvd Northbound			I-5 NB Ramp Eastbound			
Start Time	Left	Thru	Right	Left	Thru	Right	Left	Thru	Right	Left	Thru	Right	Int. Total
07:00 AM	0	3	0	0	0	1	0	3	0	0	0	0	7
07:15 AM	0	3	0	0	0	0	0	2	0	0	0	0	5
07:30 AM	0	2	0	0	0	0	0	1	0	0	0	0	3
07:45 AM	0	1	0	0	0	0	0	2	0	0	0	0	3
Total	0	9	0	0	0	1	0	8	0	0	0	0	18
08:00 AM	0	2	0	0	0	0	0	2	0	0	0	0	4
08:15 AM	0	5	0	0	0	0	0	0	0	0	0	0	5
08:30 AM	0	3	0	0	0	0	0	1	0	0	0	0	4
08:45 AM	0	2	0	0	0	0	0	2	0	0	0	0	4
Total	0	12	0	0	0	0	0	5	0	0	0	0	17
09:00 AM	0	3	0	0	0	0	0	1	0	0	0	0	4
09:15 AM	0	0	0	0	0	0	0	2	0	0	0	0	2
09:30 AM	0	1	0	0	0	0	0	2	0	0	0	0	3
Total	0	4	0	0	0	0	0	5	0	0	0	0	9
12:00 PM	0	1	0	0	0	0	0	1	0	0	0	1	3
12:30 PM	0	1	0	0	0	0	0	0	0	0	0	0	1
12:45 PM	0	0	0	0	0	0	0	2	0	0	0	0	2
Total	0	2	0	0	0	0	0	3	0	0	0	1	6
01:00 PM	0	2	0	0	0	0	0	0	0	0	0	0	2
01:15 PM	0	0	0	0	0	0	0	1	0	0	0	0	1
01:30 PM	0	1	0	0	0	0	0	0	0	0	0	0	1
01:45 PM	0	0	0	0	0	0	0	2	0	0	0	0	2
Total	0	3	0	0	0	0	0	3	0	0	0	0	6
03:00 PM	1	1	0	0	0	0	0	2	0	0	0	0	4
03:15 PM	0	3	0	0	0	1	0	2	0	0	0	0	6
03:30 PM	0	2	0	0	0	0	0	2	0	1	0	1	6
03:45 PM	0	4	0	0	0	0	0	4	0	0	0	1	9
Total	1	10	0	0	0	1	0	10	0	1	0	2	25
04:00 PM	0	3	0	0	0	0	0	0	0	0	0	0	3
04:15 PM	0	3	0	0	0	0	0	1	0	0	0	0	4
04:30 PM	0	2	0	0	0	0	0	1	0	0	0	0	3
04:45 PM	0	2	0	0	0	0	0	1	0	0	0	1	4
Total	0	10	0	0	0	0	0	3	0	0	0	1	14
05:00 PM	0	2	0	0	0	0	0	1	0	0	0	1	4
05:15 PM	0	1	0	0	0	0	0	1	0	0	0	0	2
05:30 PM	0	1	0	0	0	0	0	1	0	0	0	0	2
05:45 PM	0	1	0	0	0	0	0	1	0	0	0	0	2
Total	0	5	0	0	0	0	0	4	0	0	0	1	10
Grand Total	1	55	0	0	0	2	0	41	0	1	0	5	105
Apprch %	1.8	98.2	0	0	0	100	0	100	0	16.7	0	83.3	
Total %	1	52.4	0	0	0	1.9	0	39	0	1	0	4.8	

CITY TRAFFIC COUNTERS

626.991.7522

www.ctcounters.com

File Name : 5NBLC_Jerome_Bus
Site Code : 00000000
Start Date : 1/15/2014
Page No : 2

	Laurel Canyon Blvd Southbound				Jerome St Westbound				Laurel Canyon Blvd Northbound				I-5 NB Ramp Eastbound				
Start Time	Left	Thru	Right	App. Total	Left	Thru	Right	App. Total	Left	Thru	Right	App. Total	Left	Thru	Right	App. Total	Int. Total
Peak Hour Analysis From 07:00 AM to 09:45 AM - Peak 1 of 1																	
Peak Hour for Entire Intersection Begins at 07:00 AM																	
07:00 AM	0	**3**	0	**3**	0	0	**1**	**1**	0	**3**	0	**3**	0	0	0	0	**7**
07:15 AM	0	3	0	3	0	0	0	0	0	2	0	2	0	0	0	0	5
07:30 AM	0	2	0	2	0	0	0	0	0	1	0	1	0	0	0	0	3
07:45 AM	0	1	0	1	0	0	0	0	0	2	0	2	0	0	0	0	3
Total Volume	0	9	0	9	0	0	1	1	0	8	0	8	0	0	0	0	18
% App. Total	0	100	0		0	0	100		0	100	0		0	0	0		
PHF	.000	.750	.000	.750	.000	.000	.250	.250	.000	.667	.000	.667	.000	.000	.000	.000	.643

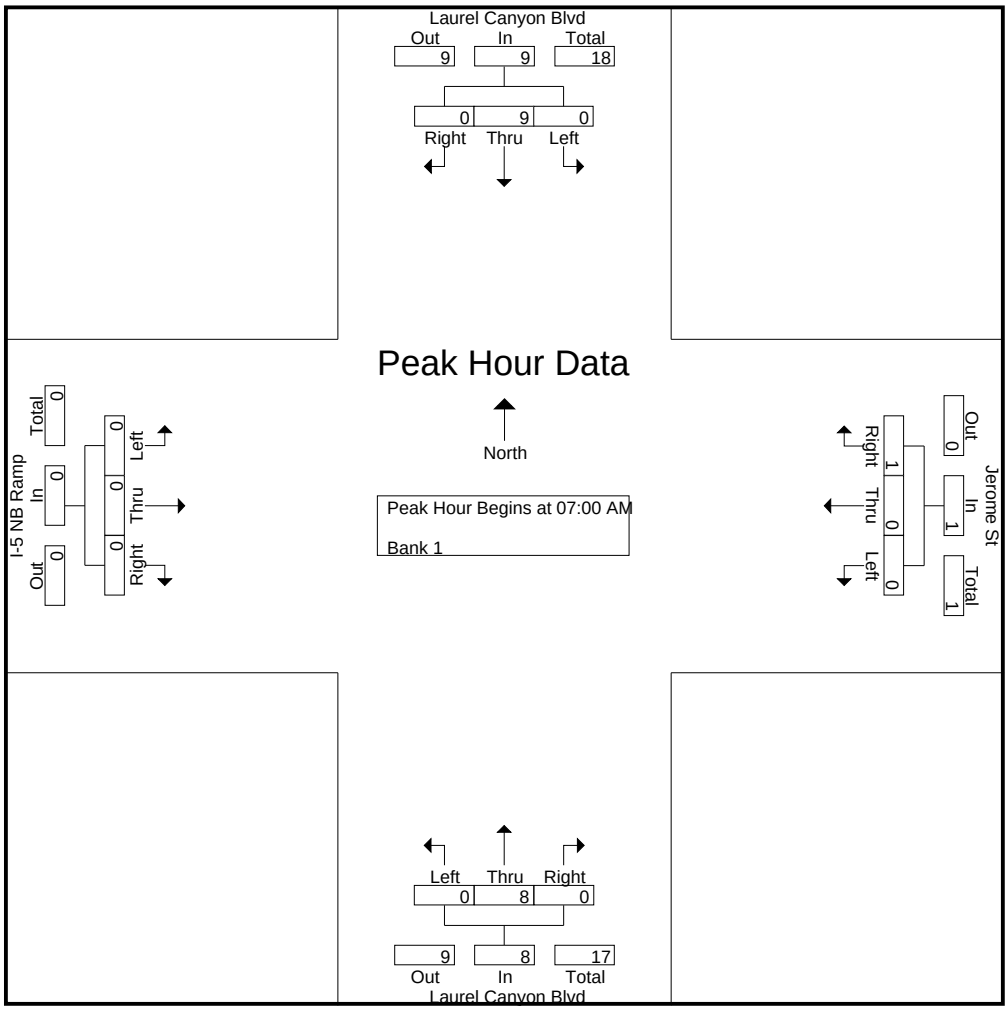

CITY TRAFFIC COUNTERS

626.991.7522

www.ctcounters.com

File Name : 5NBLC_Jerome_Bus
Site Code : 00000000
Start Date : 1/15/2014
Page No : 3

	Laurel Canyon Blvd Southbound				Jerome St Westbound				Laurel Canyon Blvd Northbound				I-5 NB Ramp Eastbound				
Start Time	Left	Thru	Right	App. Total	Left	Thru	Right	App. Total	Left	Thru	Right	App. Total	Left	Thru	Right	App. Total	Int. Total
Peak Hour Analysis From 10:00 AM to 01:45 PM - Peak 1 of 1																	
Peak Hour for Entire Intersection Begins at 12:00 PM																	
12:00 PM	0	**1**	0	**1**	0	0	0	0	0	1	0	1	0	0	**1**	**1**	**3**
12:15 PM	0	0	0	0	0	0	0	0	0	0	0	0	0	0	0	0	0
12:30 PM	0	1	0	1	0	0	0	0	0	0	0	0	0	0	0	0	1
12:45 PM	0	0	0	0	0	0	0	0	0	**2**	0	**2**	0	0	0	0	2
Total Volume	0	2	0	2	0	0	0	0	0	3	0	3	0	0	1	1	6
% App. Total	0	100	0		0	0	0		0	100	0		0	0	100		
PHF	.000	.500	.000	.500	.000	.000	.000	.000	.000	.375	.000	.375	.000	.000	.250	.250	.500

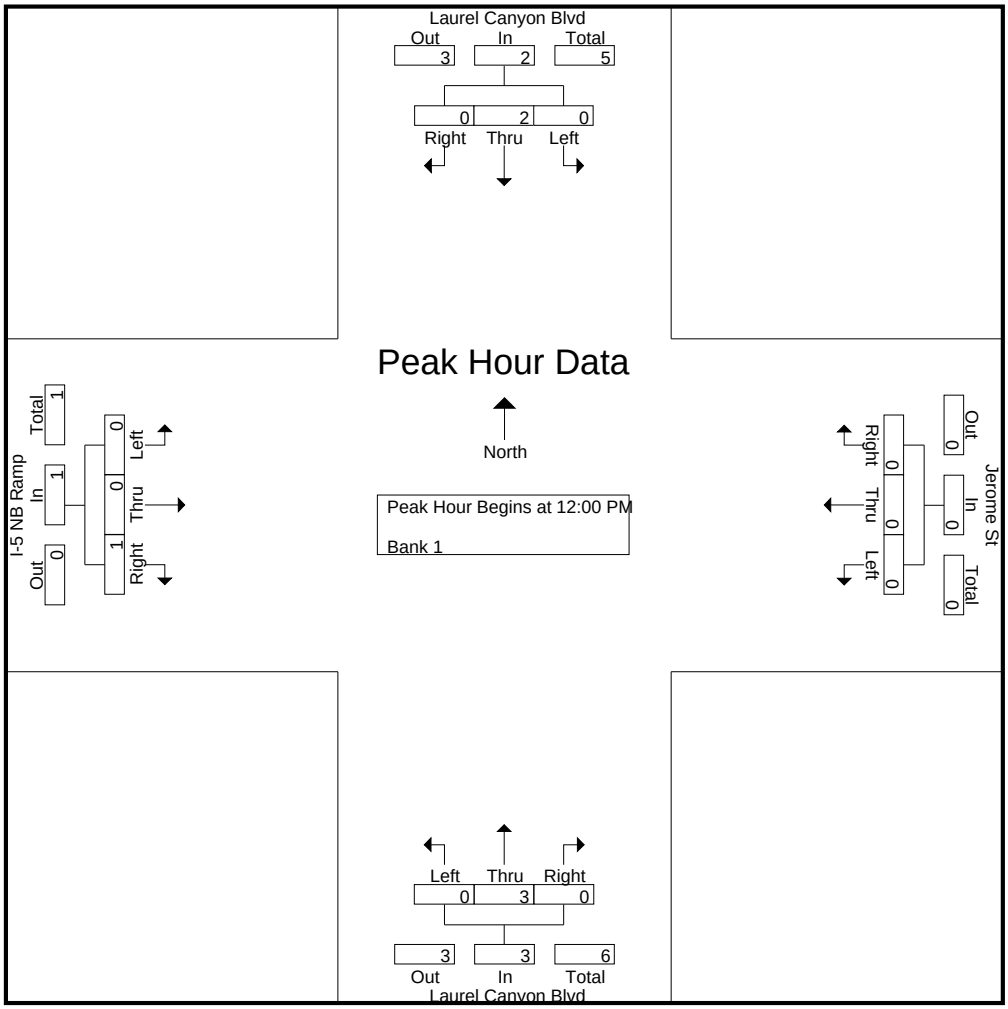

CITY TRAFFIC COUNTERS

626.991.7522

www.ctcounters.com

File Name : 5NBLC_Jerome_Bus
Site Code : 00000000
Start Date : 1/15/2014
Page No : 4

	Laurel Canyon Blvd Southbound				Jerome St Westbound				Laurel Canyon Blvd Northbound				I-5 NB Ramp Eastbound				
Start Time	Left	Thru	Right	App. Total	Left	Thru	Right	App. Total	Left	Thru	Right	App. Total	Left	Thru	Right	App. Total	Int. Total
Peak Hour Analysis From 02:00 PM to 05:45 PM - Peak 1 of 1																	
Peak Hour for Entire Intersection Begins at 03:00 PM																	
03:00 PM	**1**	1	0	2	0	0	0	0	0	2	0	2	0	0	0	0	4
03:15 PM	0	3	0	3	0	0	**1**	**1**	0	2	0	2	0	0	0	0	6
03:30 PM	0	2	0	2	0	0	0	0	0	2	0	2	**1**	0	**1**	**2**	6
03:45 PM	0	**4**	0	**4**	0	0	0	0	0	**4**	0	**4**	0	0	1	1	**9**
Total Volume	1	10	0	11	0	0	1	1	0	10	0	10	1	0	2	3	25
% App. Total	9.1	90.9	0		0	0	100		0	100	0		33.3	0	66.7		
PHF	.250	.625	.000	.688	.000	.000	.250	.250	.000	.625	.000	.625	.250	.000	.500	.375	.694

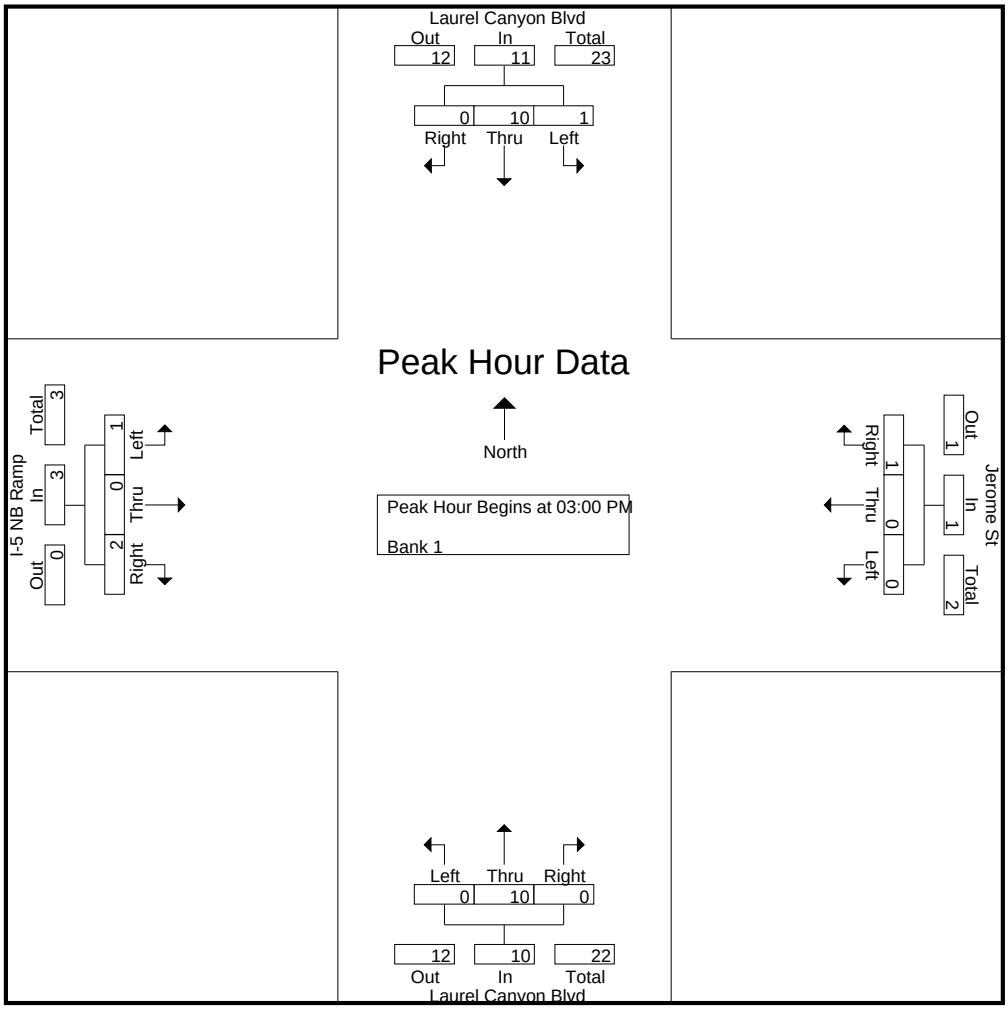

CITY TRAFFIC COUNTERS

626.991.7522

www.ctcounters.com

File Name : 5NBLC_Jerome_2Axle
Site Code : 00000000
Start Date : 1/15/2014
Page No : 1

Groups Printed- Unshifted

	Laurel Canyon Blvd Southbound			Jerome St Westbound			Laurel Canyon Blvd Northbound			I-5 NB Ramp Eastbound			
Start Time	Left	Thru	Right	Left	Thru	Right	Left	Thru	Right	Left	Thru	Right	Int. Total
07:00 AM	0	3	0	0	0	0	0	2	0	0	1	1	7
07:15 AM	0	2	0	0	0	0	0	1	0	0	0	0	3
07:30 AM	0	3	0	0	0	0	0	2	0	0	0	0	5
07:45 AM	0	6	0	0	0	0	0	2	0	1	0	1	10
Total	0	14	0	0	0	0	0	7	0	1	1	2	25
08:00 AM	0	10	0	0	0	0	0	2	0	0	0	0	12
08:15 AM	0	13	0	0	0	0	0	3	0	0	0	3	19
08:30 AM	0	13	0	0	0	0	0	2	1	0	0	0	16
08:45 AM	0	6	0	0	0	0	0	2	0	0	0	0	8
Total	0	42	0	0	0	0	0	9	1	0	0	3	55
09:00 AM	0	6	0	0	0	0	0	1	0	0	0	3	10
09:15 AM	0	8	0	0	0	0	0	3	0	1	0	4	16
09:30 AM	1	6	0	0	0	0	0	4	0	1	0	0	12
09:45 AM	0	4	0	0	0	0	0	3	0	0	1	3	11
Total	1	24	0	0	0	0	0	11	0	2	1	10	49
12:00 PM	0	2	0	0	0	0	0	3	0	1	1	1	8
12:15 PM	0	3	0	0	0	0	0	5	1	1	0	1	11
12:30 PM	0	2	0	0	0	0	0	2	1	0	0	1	6
12:45 PM	0	4	0	0	0	1	0	2	0	1	0	1	9
Total	0	11	0	0	0	1	0	12	2	3	1	4	34
01:00 PM	0	3	0	0	0	0	0	2	0	0	0	0	5
01:15 PM	0	2	0	0	0	0	0	1	0	0	0	2	5
01:30 PM	0	1	0	0	0	1	0	2	0	0	0	0	4
01:45 PM	0	4	0	0	0	1	0	3	0	0	0	0	8
Total	0	10	0	0	0	2	0	8	0	0	0	2	22
03:00 PM	0	3	0	0	0	0	0	6	0	3	2	0	14
03:15 PM	0	6	0	0	0	0	0	5	0	0	0	1	12
03:30 PM	0	4	0	0	0	0	0	3	0	0	0	1	8
03:45 PM	0	3	0	0	0	0	0	3	1	0	0	0	7
Total	0	16	0	0	0	0	0	17	1	3	2	2	41
04:00 PM	0	3	0	0	0	0	0	1	0	0	0	0	4
04:15 PM	0	1	0	0	0	1	0	4	0	0	0	1	7
04:30 PM	0	0	0	0	0	0	0	3	0	1	0	1	5
04:45 PM	0	1	0	0	0	0	0	4	0	0	0	0	5
Total	0	5	0	0	0	1	0	12	0	1	0	2	21
05:00 PM	0	3	0	0	0	0	0	6	0	1	0	0	10
05:15 PM	2	2	0	0	0	0	0	4	0	0	0	1	9
05:30 PM	0	1	0	0	0	0	0	4	0	0	0	0	5
05:45 PM	0	0	0	0	0	0	0	2	0	0	0	1	3
Total	2	6	0	0	0	0	0	16	0	1	0	2	27
Grand Total	3	128	0	0	0	4	0	92	4	11	5	27	274
Apprch %	2.3	97.7	0	0	0	100	0	95.8	4.2	25.6	11.6	62.8	
Total %	1.1	46.7	0	0	0	1.5	0	33.6	1.5	4	1.8	9.9	

CITY TRAFFIC COUNTERS

626.991.7522

www.ctcounters.com

File Name : 5NBLC_Jerome_2Axle
Site Code : 00000000
Start Date : 1/15/2014
Page No : 2

	Laurel Canyon Blvd Southbound				Jerome St Westbound				Laurel Canyon Blvd Northbound				I-5 NB Ramp Eastbound				
Start Time	Left	Thru	Right	App. Total	Left	Thru	Right	App. Total	Left	Thru	Right	App. Total	Left	Thru	Right	App. Total	Int. Total
Peak Hour Analysis From 07:00 AM to 09:45 AM - Peak 1 of 1																	
Peak Hour for Entire Intersection Begins at 07:45 AM																	
07:45 AM	0	6	0	6	0	0	0	0	0	2	0	2	**1**	0	1	2	10
08:00 AM	0	10	0	10	0	0	0	0	0	2	0	2	0	0	0	0	12
08:15 AM	0	**13**	0	**13**	0	0	0	0	0	**3**	0	**3**	0	0	**3**	**3**	**19**
08:30 AM	0	13	0	13	0	0	0	0	0	2	**1**	3	0	0	0	0	16
Total Volume	0	42	0	42	0	0	0	0	0	9	1	10	1	0	4	5	57
% App. Total	0	100	0		0	0	0		0	90	10		20	0	80		
PHF	.000	.808	.000	.808	.000	.000	.000	.000	.000	.750	.250	.833	.250	.000	.333	.417	.750

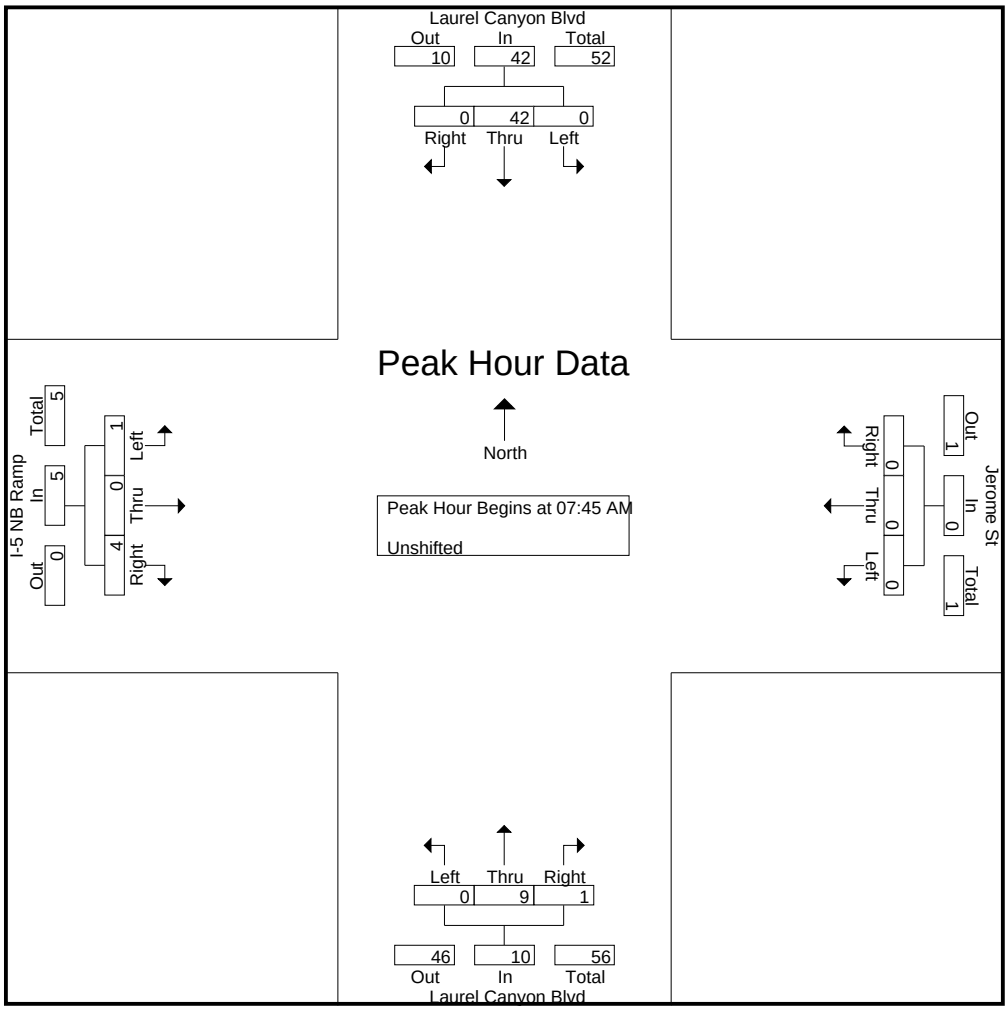

CITY TRAFFIC COUNTERS

626.991.7522

www.ctcounters.com

File Name : 5NBLC_Jerome_2Axle
Site Code : 00000000
Start Date : 1/15/2014
Page No : 3

	Laurel Canyon Blvd Southbound				Jerome St Westbound				Laurel Canyon Blvd Northbound				I-5 NB Ramp Eastbound				
Start Time	Left	Thru	Right	App. Total	Left	Thru	Right	App. Total	Left	Thru	Right	App. Total	Left	Thru	Right	App. Total	Int. Total
Peak Hour Analysis From 10:00 AM to 01:45 PM - Peak 1 of 1																	
Peak Hour for Entire Intersection Begins at 12:00 PM																	
12:00 PM	0	2	0	2	0	0	0	0	0	3	0	3	**1**	**1**	**1**	**3**	8
12:15 PM	0	3	0	3	0	0	0	0	0	**5**	**1**	**6**	1	0	1	2	**11**
12:30 PM	0	2	0	2	0	0	0	0	0	2	1	3	0	0	1	1	6
12:45 PM	0	**4**	0	**4**	0	0	**1**	**1**	0	2	0	2	1	0	1	2	9
Total Volume	0	11	0	11	0	0	1	1	0	12	2	14	3	1	4	8	34
% App. Total	0	100	0		0	0	100		0	85.7	14.3		37.5	12.5	50		
PHF	.000	.688	.000	.688	.000	.000	.250	.250	.000	.600	.500	.583	.750	.250	1.00	.667	.773

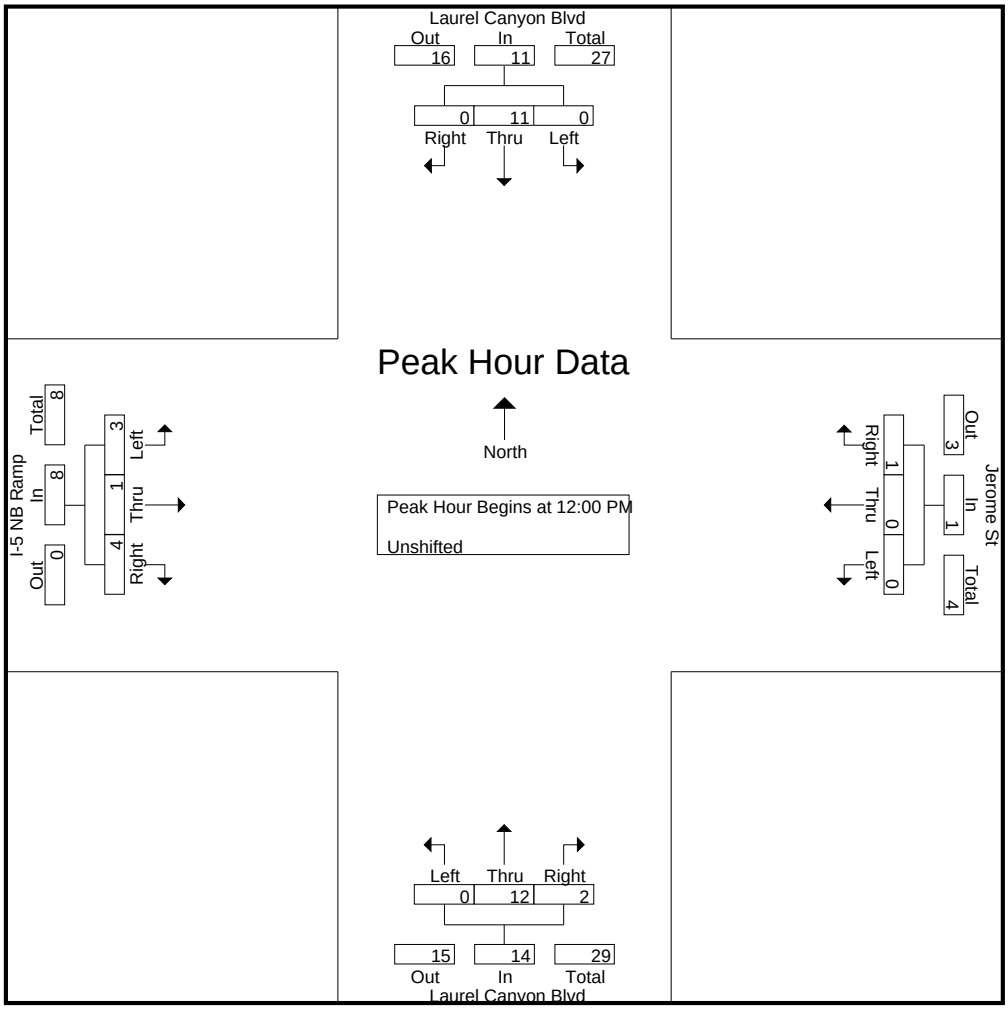

CITY TRAFFIC COUNTERS

626.991.7522

www.ctcounters.com

File Name : 5NBLC_Jerome_2Axle
Site Code : 00000000
Start Date : 1/15/2014
Page No : 4

	Laurel Canyon Blvd Southbound				Jerome St Westbound				Laurel Canyon Blvd Northbound				I-5 NB Ramp Eastbound				
Start Time	Left	Thru	Right	App. Total	Left	Thru	Right	App. Total	Left	Thru	Right	App. Total	Left	Thru	Right	App. Total	Int. Total
Peak Hour Analysis From 02:00 PM to 05:45 PM - Peak 1 of 1																	
Peak Hour for Entire Intersection Begins at 03:00 PM																	
03:00 PM	0	3	0	3	0	0	0	0	0	**6**	0	**6**	**3**	**2**	0	**5**	**14**
03:15 PM	0	**6**	0	**6**	0	0	0	0	0	5	0	5	0	0	**1**	1	12
03:30 PM	0	4	0	4	0	0	0	0	0	3	0	3	0	0	1	1	8
03:45 PM	0	3	0	3	0	0	0	0	0	3	**1**	4	0	0	0	0	7
Total Volume	0	16	0	16	0	0	0	0	0	17	1	18	3	2	2	7	41
% App. Total	0	100	0		0	0	0		0	94.4	5.6		42.9	28.6	28.6		
PHF	.000	.667	.000	.667	.000	.000	.000	.000	.000	.708	.250	.750	.250	.250	.500	.350	.732

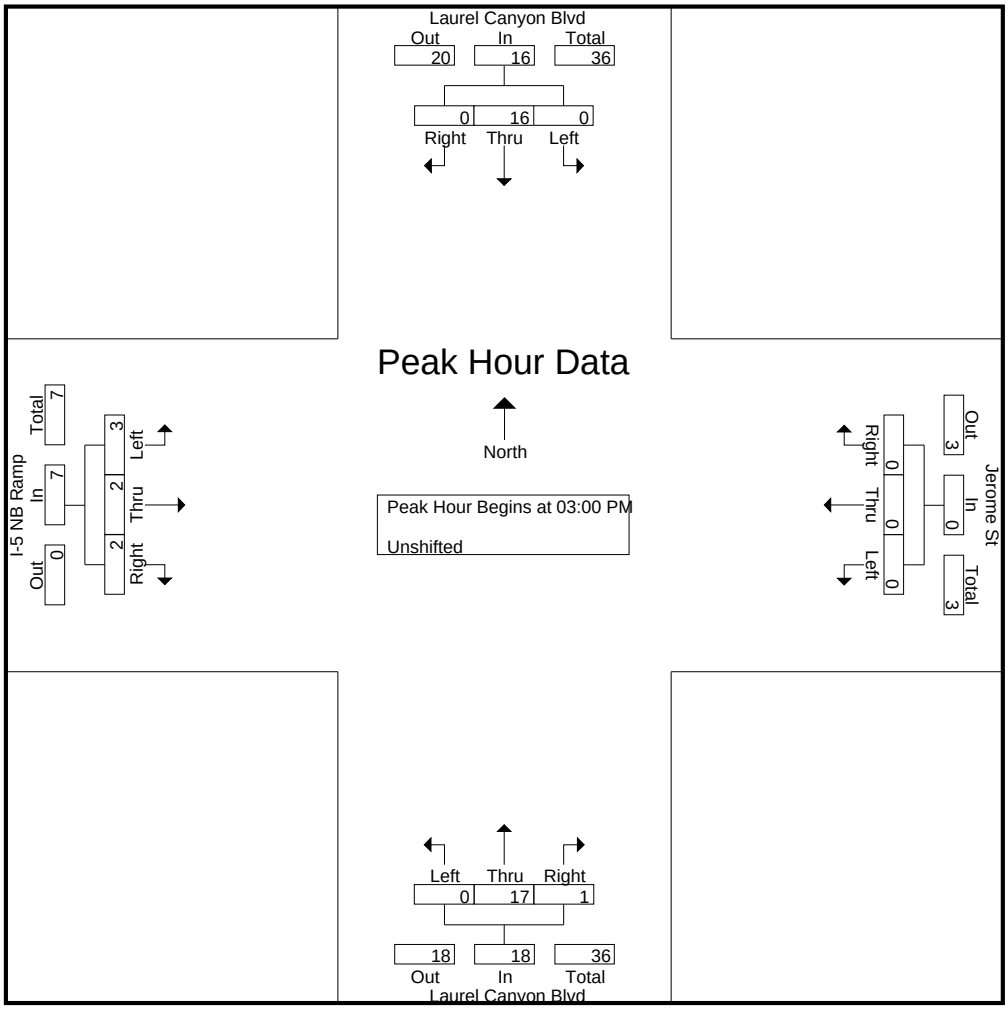

CITY TRAFFIC COUNTERS

626.991.7522

www.ctcounters.com

File Name : 5NBLC_Jerome_3Axle
Site Code : 00000000
Start Date : 1/15/2014
Page No : 1

Groups Printed- Bank 2

	Laurel Canyon Blvd Southbound			Jerome St Westbound			Laurel Canyon Blvd Northbound			I-5 NB Ramp Eastbound			
Start Time	Left	Thru	Right	Left	Thru	Right	Left	Thru	Right	Left	Thru	Right	Int. Total
07:00 AM	0	0	0	0	0	0	0	1	0	0	0	1	2
07:15 AM	0	2	0	0	0	1	0	0	0	0	0	0	3
07:30 AM	0	3	0	0	0	0	0	0	0	0	0	0	3
07:45 AM	0	4	0	0	0	0	0	0	0	0	0	0	4
Total	0	9	0	0	0	1	0	1	0	0	0	1	12
08:00 AM	0	1	0	0	0	1	0	1	0	0	0	0	3
08:15 AM	0	1	0	0	0	0	0	2	0	0	0	1	4
08:30 AM	0	1	0	0	0	0	0	2	0	0	0	0	3
08:45 AM	0	2	0	0	0	0	0	0	0	0	0	1	3
Total	0	5	0	0	0	1	0	5	0	0	0	2	13
09:00 AM	0	5	0	0	0	0	0	0	0	0	0	0	5
09:15 AM	0	3	0	0	0	0	0	0	0	0	1	1	5
09:30 AM	0	3	0	0	0	0	0	1	0	0	0	0	4
09:45 AM	0	0	0	0	0	0	0	0	0	0	0	1	1
Total	0	11	0	0	0	0	0	1	0	0	1	2	15
12:00 PM	0	0	0	0	0	0	0	2	0	0	0	0	2
12:15 PM	0	0	0	0	0	0	0	1	0	0	0	0	1
12:30 PM	0	1	0	0	0	0	0	0	0	0	0	1	2
Total	0	1	0	0	0	0	0	3	0	0	0	1	5
01:00 PM	0	1	0	0	0	0	0	1	0	1	0	0	3
01:15 PM	0	0	0	0	0	0	0	1	0	0	0	2	3
01:30 PM	0	2	0	0	0	0	0	1	0	0	0	0	3
01:45 PM	0	2	0	0	0	0	0	0	0	0	0	0	2
Total	0	5	0	0	0	0	0	3	0	1	0	2	11
03:00 PM	0	0	0	0	0	0	0	1	0	0	0	0	1
03:15 PM	0	0	0	0	0	0	0	1	0	0	0	1	2
03:30 PM	0	1	0	0	0	0	0	1	0	0	0	1	3
03:45 PM	0	1	0	0	0	0	0	0	0	0	0	1	2
Total	0	2	0	0	0	0	0	3	0	0	0	3	8
04:00 PM	0	0	0	0	0	0	0	0	0	0	0	1	1
04:15 PM	0	1	0	0	0	0	0	1	0	0	0	0	2
Total	0	1	0	0	0	0	0	1	0	0	0	1	3
05:00 PM	0	2	0	0	0	0	0	0	0	0	0	0	2
05:15 PM	0	0	0	0	0	0	0	2	0	0	0	0	2
Total	0	2	0	0	0	0	0	2	0	0	0	0	4
Grand Total	0	36	0	0	0	2	0	19	0	1	1	12	71
Apprch %	0	100	0	0	0	100	0	100	0	7.1	7.1	85.7	
Total %	0	50.7	0	0	0	2.8	0	26.8	0	1.4	1.4	16.9	

CITY TRAFFIC COUNTERS

626.991.7522

www.ctcounters.com

File Name : 5NBLC_Jerome_3Axle
Site Code : 00000000
Start Date : 1/15/2014
Page No : 2

	Laurel Canyon Blvd Southbound				Jerome St Westbound				Laurel Canyon Blvd Northbound				I-5 NB Ramp Eastbound				
Start Time	Left	Thru	Right	App. Total	Left	Thru	Right	App. Total	Left	Thru	Right	App. Total	Left	Thru	Right	App. Total	Int. Total
Peak Hour Analysis From 07:00 AM to 09:45 AM - Peak 1 of 1																	
Peak Hour for Entire Intersection Begins at 08:45 AM																	
08:45 AM	0	2	0	2	0	0	0	0	0	0	0	0	0	0	**1**	1	3
09:00 AM	0	**5**	0	**5**	0	0	0	0	0	0	0	0	0	0	0	0	**5**
09:15 AM	0	3	0	3	0	0	0	0	0	0	0	0	0	**1**	1	**2**	5
09:30 AM	0	3	0	3	0	0	0	0	0	**1**	0	**1**	0	0	0	0	4
Total Volume	0	13	0	13	0	0	0	0	0	1	0	1	0	1	2	3	17
% App. Total	0	100	0		0	0	0		0	100	0		0	33.3	66.7		
PHF	.000	.650	.000	.650	.000	.000	.000	.000	.000	.250	.000	.250	.000	.250	.500	.375	.850

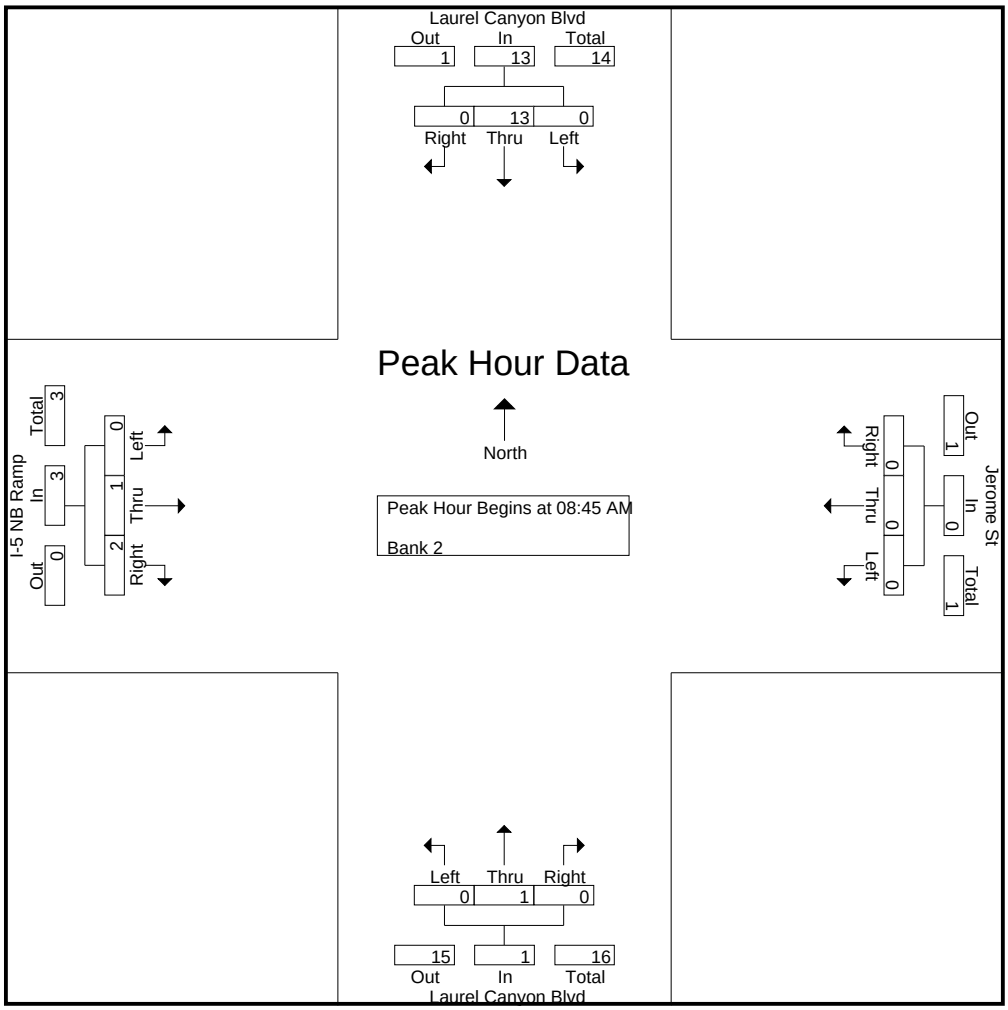

CITY TRAFFIC COUNTERS

626.991.7522

www.ctcounters.com

File Name : 5NBLC_Jerome_3Axle
Site Code : 00000000
Start Date : 1/15/2014
Page No : 3

	Laurel Canyon Blvd Southbound				Jerome St Westbound				Laurel Canyon Blvd Northbound				I-5 NB Ramp Eastbound				
Start Time	Left	Thru	Right	App. Total	Left	Thru	Right	App. Total	Left	Thru	Right	App. Total	Left	Thru	Right	App. Total	Int. Total
Peak Hour Analysis From 10:00 AM to 01:45 PM - Peak 1 of 1																	
Peak Hour for Entire Intersection Begins at 01:00 PM																	
01:00 PM	0	1	0	1	0	0	0	0	0	**1**	0	**1**	**1**	0	0	1	**3**
01:15 PM	0	0	0	0	0	0	0	0	0	1	0	1	0	0	**2**	**2**	3
01:30 PM	0	**2**	0	**2**	0	0	0	0	0	1	0	1	0	0	0	0	3
01:45 PM	0	2	0	2	0	0	0	0	0	0	0	0	0	0	0	0	2
Total Volume	0	5	0	5	0	0	0	0	0	3	0	3	1	0	2	3	11
% App. Total	0	100	0		0	0	0		0	100	0		33.3	0	66.7		
PHF	.000	.625	.000	.625	.000	.000	.000	.000	.000	.750	.000	.750	.250	.000	.250	.375	.917

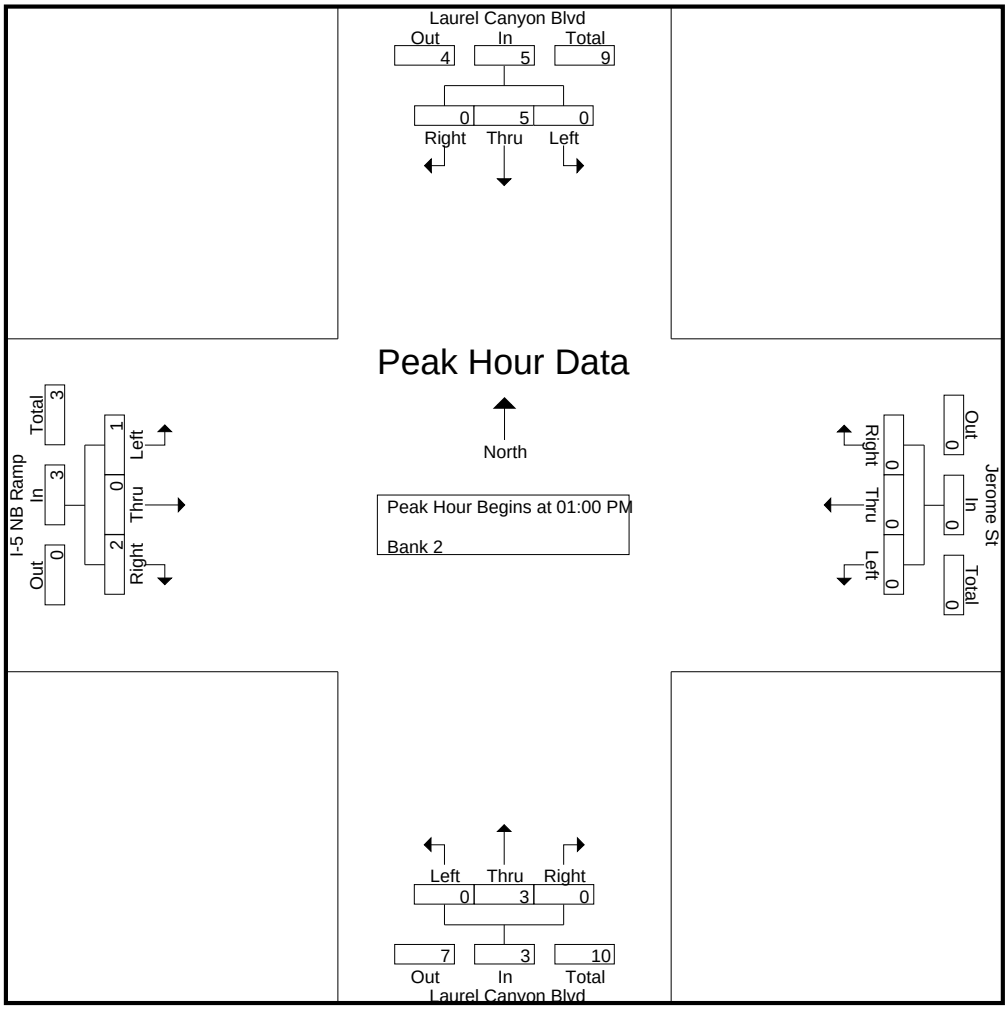

CITY TRAFFIC COUNTERS

626.991.7522

www.ctcounters.com

File Name : 5NBLC_Jerome_3Axle
Site Code : 00000000
Start Date : 1/15/2014
Page No : 4

	Laurel Canyon Blvd Southbound				Jerome St Westbound				Laurel Canyon Blvd Northbound				I-5 NB Ramp Eastbound				
Start Time	Left	Thru	Right	App. Total	Left	Thru	Right	App. Total	Left	Thru	Right	App. Total	Left	Thru	Right	App. Total	Int. Total
Peak Hour Analysis From 02:00 PM to 05:45 PM - Peak 1 of 1																	
Peak Hour for Entire Intersection Begins at 03:00 PM																	
03:00 PM	0	0	0	0	0	0	0	0	0	**1**	0	**1**	0	0	0	0	1
03:15 PM	0	0	0	0	0	0	0	0	0	1	0	1	0	0	**1**	**1**	2
03:30 PM	0	**1**	0	**1**	0	0	0	0	0	1	0	1	0	0	1	1	**3**
03:45 PM	0	1	0	1	0	0	0	0	0	0	0	0	0	0	1	1	2
Total Volume	0	2	0	2	0	0	0	0	0	3	0	3	0	0	3	3	8
% App. Total	0	100	0		0	0	0		0	100	0		0	0	100		
PHF	.000	.500	.000	.500	.000	.000	.000	.000	.000	.750	.000	.750	.000	.000	.750	.750	.667

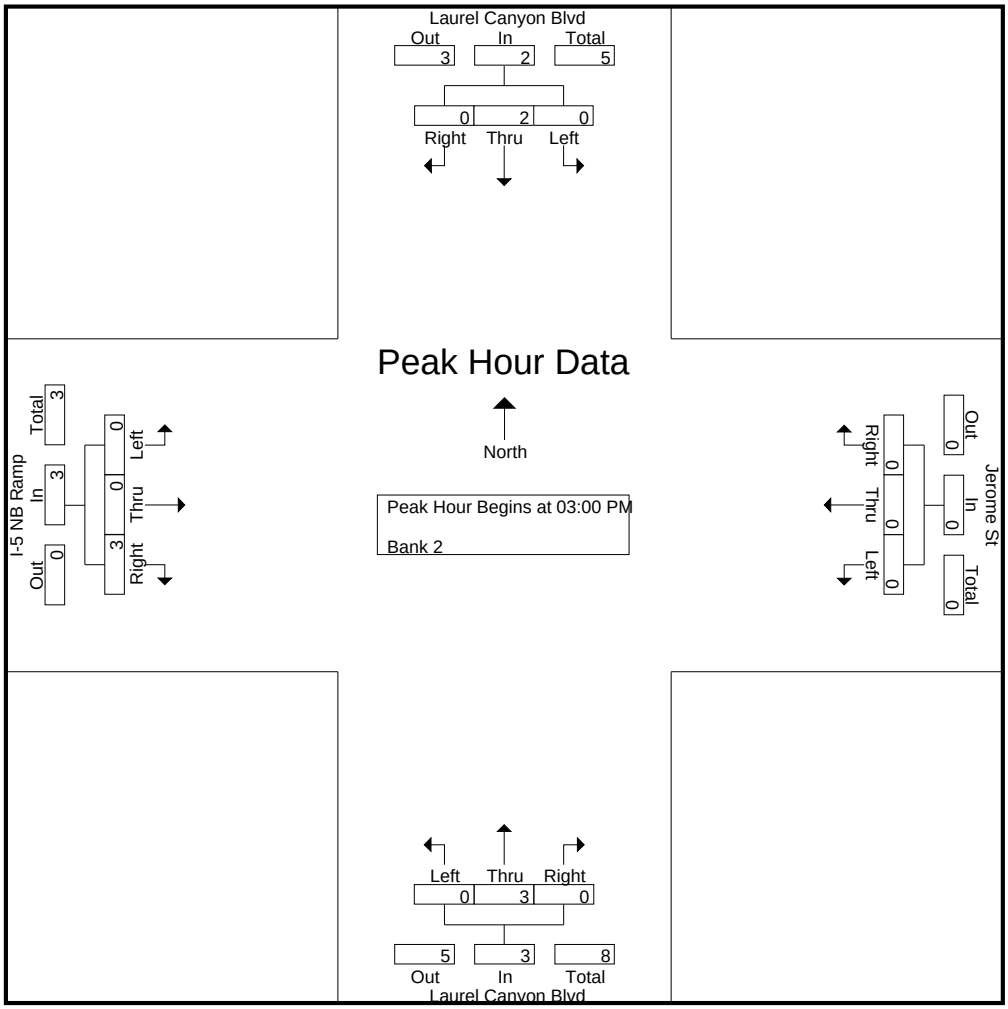

CITY TRAFFIC COUNTERS

626.991.7522

www.ctcounters.com

File Name : 5NBLC_Jerome_4Axle
Site Code : 00000000
Start Date : 1/15/2014
Page No : 1

Groups Printed- Bank 2

	Laurel Canyon Blvd Southbound			Jerome St Westbound			Laurel Canyon Blvd Northbound			I-5 NB Ramp Eastbound			
Start Time	Left	Thru	Right	Left	Thru	Right	Left	Thru	Right	Left	Thru	Right	Int. Total
07:30 AM	0	0	0	0	0	0	0	1	0	0	0	0	1
07:45 AM	0	1	0	0	0	0	0	1	0	0	0	0	2
Total	0	1	0	0	0	0	0	2	0	0	0	0	3
08:00 AM	0	1	0	0	0	0	0	0	0	0	0	0	1
08:15 AM	0	0	0	0	0	0	0	0	0	1	0	0	1
08:30 AM	0	1	0	0	0	0	0	0	0	0	0	0	1
Total	0	2	0	0	0	0	0	0	0	1	0	0	3
09:00 AM	0	1	0	0	0	0	0	0	0	0	0	0	1
09:15 AM	0	0	0	0	0	0	0	0	0	0	0	1	1
09:30 AM	0	0	0	0	0	0	0	0	0	0	0	1	1
Total	0	1	0	0	0	0	0	0	0	0	0	2	3
12:00 PM	0	1	0	0	0	0	0	0	0	0	0	1	2
12:30 PM	0	0	0	0	0	0	0	0	0	0	0	1	1
12:45 PM	0	1	0	0	0	0	0	0	0	0	0	0	1
Total	0	2	0	0	0	0	0	0	0	0	0	2	4
01:00 PM	0	2	0	0	0	0	0	0	0	0	0	0	2
01:15 PM	0	2	0	0	0	0	0	0	0	0	0	1	3
01:30 PM	0	0	0	0	0	0	0	0	0	0	0	1	1
Total	0	4	0	0	0	0	0	0	0	0	0	2	6
03:00 PM	0	0	0	0	0	0	0	0	0	0	0	1	1
03:15 PM	0	1	0	0	0	0	0	0	0	0	0	0	1
03:45 PM	0	0	0	0	0	0	0	0	0	0	0	1	1
Total	0	1	0	0	0	0	0	0	0	0	0	2	3
04:15 PM	0	1	0	0	0	0	0	0	0	0	0	0	1
Total	0	1	0	0	0	0	0	0	0	0	0	0	1
Grand Total	0	12	0	0	0	0	0	2	0	1	0	8	23
Apprch %	0	100	0	0	0	0	0	100	0	11.1	0	88.9	
Total %	0	52.2	0	0	0	0	0	8.7	0	4.3	0	34.8	

CITY TRAFFIC COUNTERS

626.991.7522

www.ctcounters.com

File Name : 5NBLC_Jerome_4Axle
Site Code : 00000000
Start Date : 1/15/2014
Page No : 2

	Laurel Canyon Blvd Southbound				Jerome St Westbound				Laurel Canyon Blvd Northbound				I-5 NB Ramp Eastbound				
Start Time	Left	Thru	Right	App. Total	Left	Thru	Right	App. Total	Left	Thru	Right	App. Total	Left	Thru	Right	App. Total	Int. Total
Peak Hour Analysis From 07:00 AM to 09:45 AM - Peak 1 of 1																	
Peak Hour for Entire Intersection Begins at 07:30 AM																	
07:30 AM	0	0	0	0	0	0	0	0	0	**1**	0	**1**	0	0	0	0	1
07:45 AM	0	**1**	0	**1**	0	0	0	0	0	1	0	1	0	0	0	0	**2**
08:00 AM	0	1	0	1	0	0	0	0	0	0	0	0	0	0	0	0	1
08:15 AM	0	0	0	0	0	0	0	0	0	0	0	0	**1**	0	0	**1**	1
Total Volume	0	2	0	2	0	0	0	0	0	2	0	2	1	0	0	1	5
% App. Total	0	100	0		0	0	0		0	100	0		100	0	0		
PHF	.000	.500	.000	.500	.000	.000	.000	.000	.000	.500	.000	.500	.250	.000	.000	.250	.625

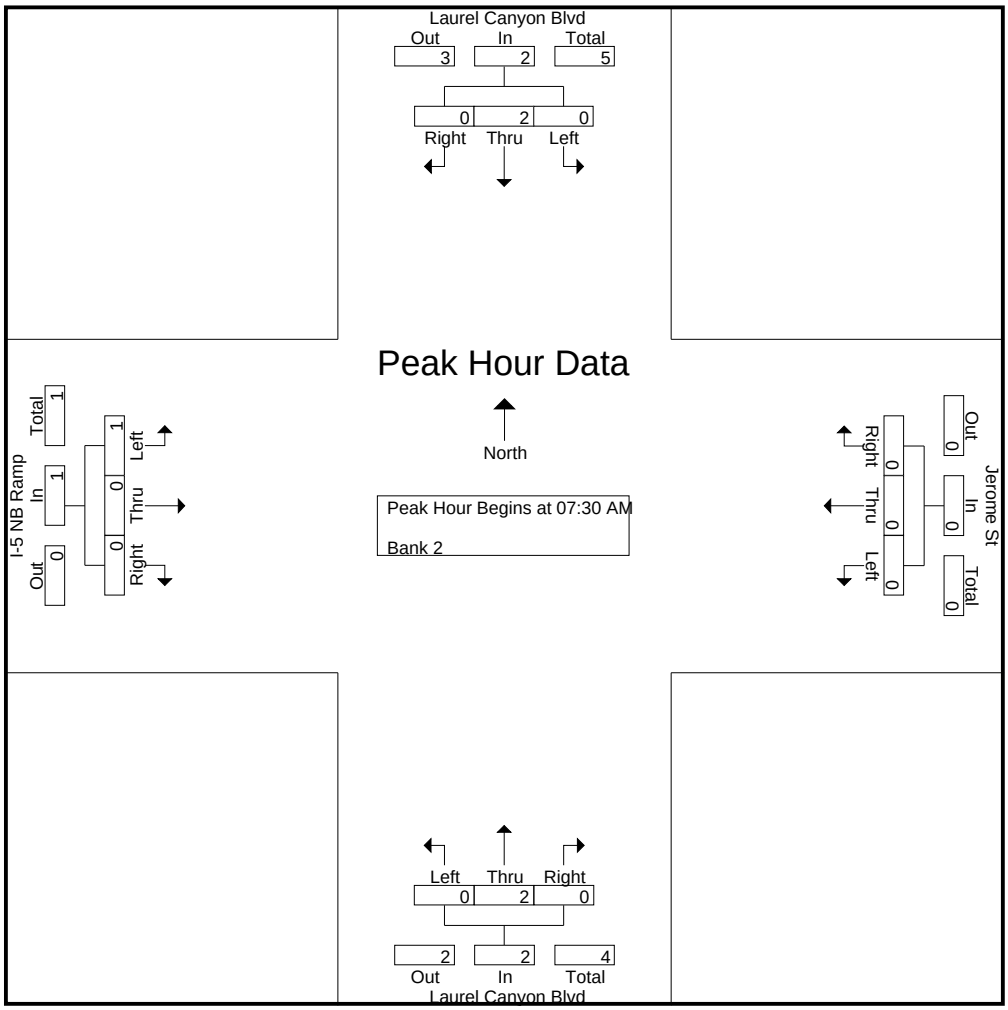

CITY TRAFFIC COUNTERS

626.991.7522

www.ctcounters.com

File Name : 5NBLC_Jerome_4Axle
Site Code : 00000000
Start Date : 1/15/2014
Page No : 3

	Laurel Canyon Blvd Southbound				Jerome St Westbound				Laurel Canyon Blvd Northbound				I-5 NB Ramp Eastbound				
Start Time	Left	Thru	Right	App. Total	Left	Thru	Right	App. Total	Left	Thru	Right	App. Total	Left	Thru	Right	App. Total	Int. Total
Peak Hour Analysis From 10:00 AM to 01:45 PM - Peak 1 of 1																	
Peak Hour for Entire Intersection Begins at 12:30 PM																	
12:30 PM	0	0	0	0	0	0	0	0	0	0	0	0	0	0	**1**	**1**	1
12:45 PM	0	1	0	1	0	0	0	0	0	0	0	0	0	0	0	0	1
01:00 PM	0	**2**	0	**2**	0	0	0	0	0	0	0	0	0	0	0	0	2
01:15 PM	0	2	0	2	0	0	0	0	0	0	0	0	0	0	1	1	**3**
Total Volume	0	5	0	5	0	0	0	0	0	0	0	0	0	0	2	2	7
% App. Total	0	100	0		0	0	0		0	0	0		0	0	100		
PHF	.000	.625	.000	.625	.000	.000	.000	.000	.000	.000	.000	.000	.000	.000	.500	.500	.583

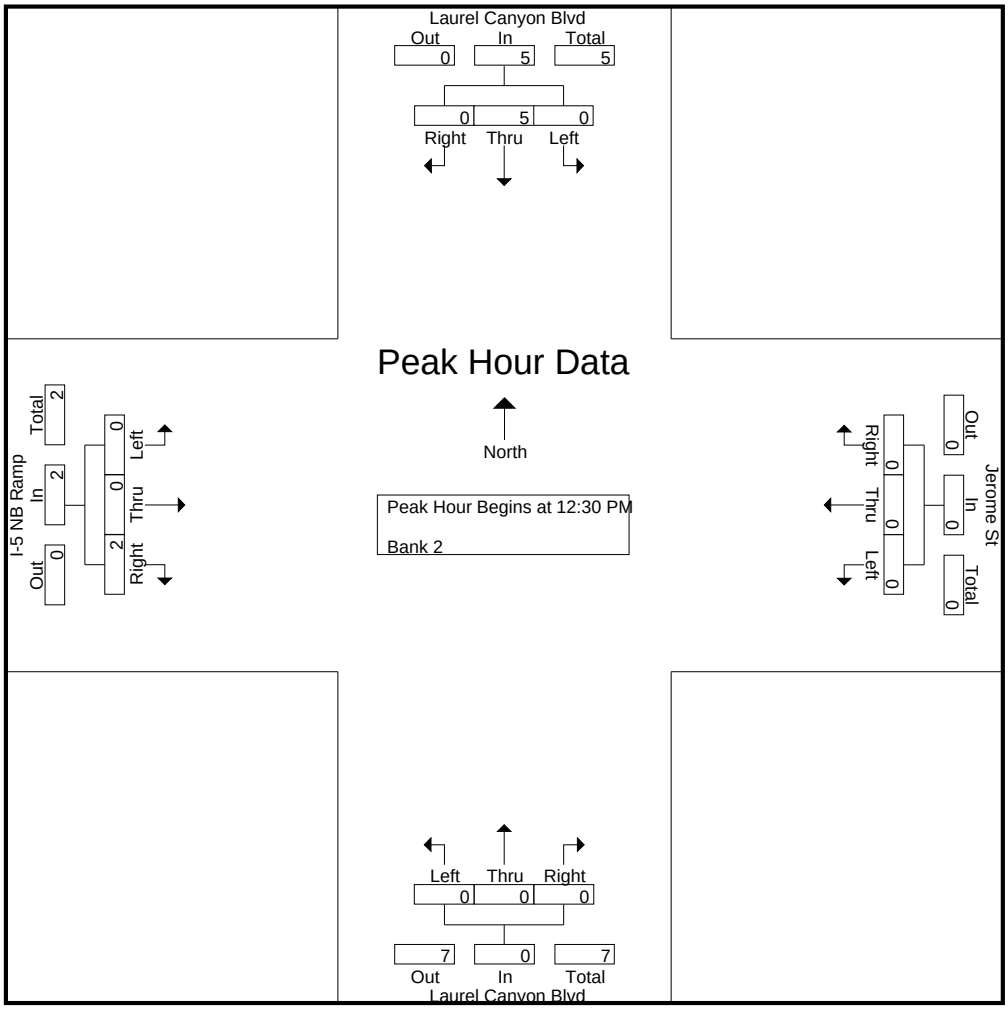

CITY TRAFFIC COUNTERS

626.991.7522

www.ctcounters.com

File Name : 5NBLC_Jerome_4Axle
Site Code : 00000000
Start Date : 1/15/2014
Page No : 4

	Laurel Canyon Blvd Southbound				Jerome St Westbound				Laurel Canyon Blvd Northbound				I-5 NB Ramp Eastbound				
Start Time	Left	Thru	Right	App. Total	Left	Thru	Right	App. Total	Left	Thru	Right	App. Total	Left	Thru	Right	App. Total	Int. Total
Peak Hour Analysis From 02:00 PM to 05:45 PM - Peak 1 of 1																	
Peak Hour for Entire Intersection Begins at 03:00 PM																	
03:00 PM	0	0	0	0	0	0	0	0	0	0	0	0	0	0	**1**	**1**	**1**
03:15 PM	0	**1**	0	**1**	0	0	0	0	0	0	0	0	0	0	0	0	1
03:30 PM	0	0	0	0	0	0	0	0	0	0	0	0	0	0	0	0	0
03:45 PM	0	0	0	0	0	0	0	0	0	0	0	0	0	0	1	1	1
Total Volume	0	1	0	1	0	0	0	0	0	0	0	0	0	0	2	2	3
% App. Total	0	100	0		0	0	0		0	0	0		0	0	100		
PHF	.000	.250	.000	.250	.000	.000	.000	.000	.000	.000	.000	.000	.000	.000	.500	.500	.750

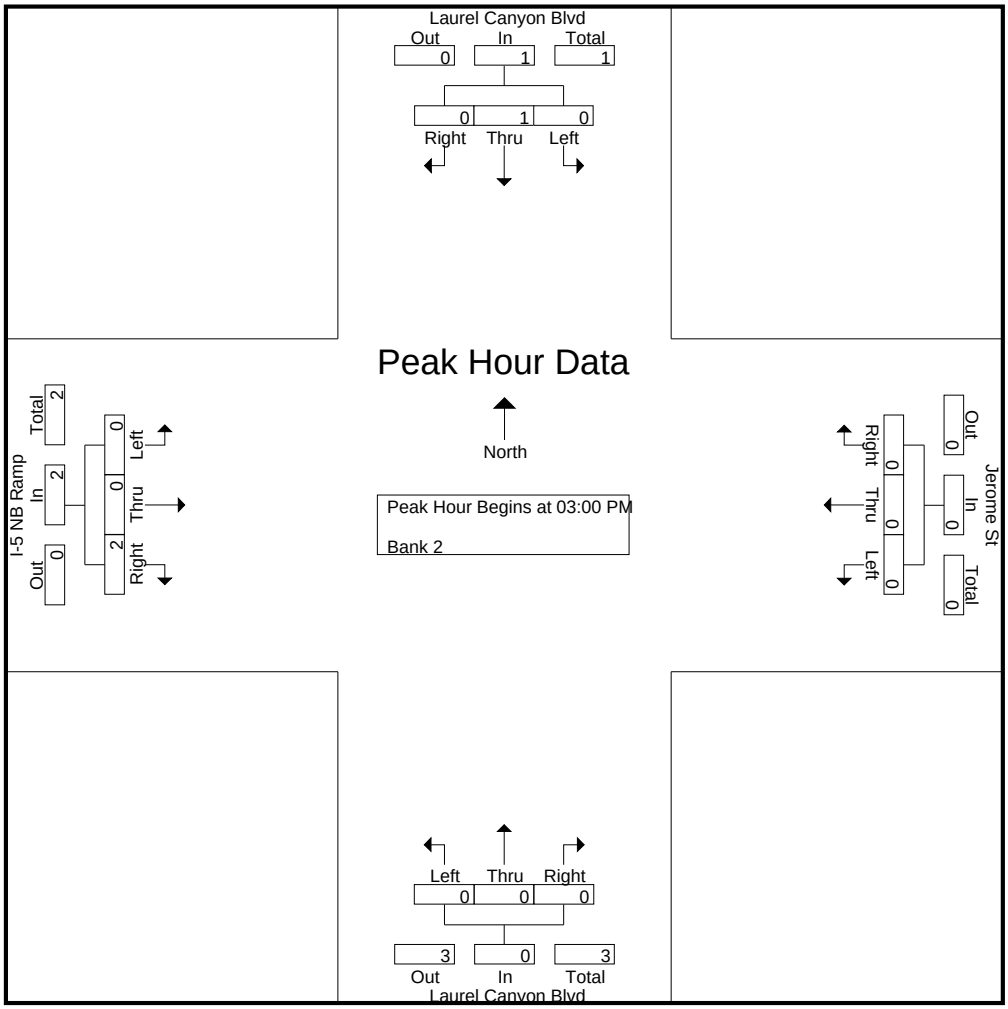

CITY TRAFFIC COUNTERS

626.991.7522

www.ctcounters.com

File Name : 5NBLC_Jerome_5Axle
Site Code : 00000000
Start Date : 1/15/2014
Page No : 1

Groups Printed- Bank 2

	Laurel Canyon Blvd Southbound			Jerome St Westbound			Laurel Canyon Blvd Northbound			I-5 NB Ramp Eastbound			
Start Time	Left	Thru	Right	Left	Thru	Right	Left	Thru	Right	Left	Thru	Right	Int. Total
07:00 AM	0	1	0	0	0	0	0	1	0	0	0	0	2
07:15 AM	0	2	0	0	0	0	0	0	0	0	0	5	7
07:30 AM	0	2	0	0	0	0	0	5	0	0	0	0	7
07:45 AM	0	5	0	0	0	0	0	3	0	0	0	1	9
Total	0	10	0	0	0	0	0	9	0	0	0	6	25
08:00 AM	0	0	0	0	0	0	0	0	0	0	0	2	2
08:15 AM	0	4	0	0	0	0	0	0	0	0	0	1	5
08:30 AM	0	1	0	0	0	0	0	0	0	3	0	2	6
08:45 AM	0	1	0	0	0	0	0	1	0	1	0	0	3
Total	0	6	0	0	0	0	0	1	0	4	0	5	16
09:00 AM	0	1	1	0	0	0	0	0	0	1	0	0	3
09:15 AM	0	1	0	0	0	0	0	0	0	2	0	0	3
09:30 AM	0	0	0	0	0	0	0	0	0	2	0	0	2
09:45 AM	0	0	0	0	0	0	0	0	0	1	0	0	1
Total	0	2	1	0	0	0	0	0	0	6	0	0	9
12:00 PM	0	1	0	0	0	0	0	0	0	4	0	1	6
12:15 PM	0	0	0	0	0	0	0	0	0	1	0	1	2
12:30 PM	0	0	0	0	0	0	0	1	0	1	0	0	2
12:45 PM	0	0	0	0	0	0	0	1	0	1	0	0	2
Total	0	1	0	0	0	0	0	2	0	7	0	2	12
01:00 PM	0	2	0	0	0	0	0	0	0	2	0	0	4
01:15 PM	0	2	0	0	0	0	0	0	0	1	0	1	4
01:30 PM	0	1	0	0	0	0	0	1	0	1	0	1	4
01:45 PM	0	1	0	0	0	0	0	1	0	2	0	0	4
Total	0	6	0	0	0	0	0	2	0	6	0	2	16
03:00 PM	0	1	0	0	0	0	0	1	0	1	0	0	3
03:15 PM	0	2	0	0	0	0	0	0	0	0	0	0	2
03:30 PM	0	1	0	0	0	0	0	2	0	0	0	0	3
03:45 PM	0	1	0	0	0	0	0	0	0	0	0	0	1
Total	0	5	0	0	0	0	0	3	0	1	0	0	9
04:30 PM	0	1	0	0	0	0	0	0	0	0	0	0	1
Total	0	1	0	0	0	0	0	0	0	0	0	0	1
05:00 PM	0	1	0	0	0	0	0	0	0	0	0	1	2
05:30 PM	0	1	0	0	0	0	0	1	0	0	0	0	2
05:45 PM	0	1	0	0	0	0	0	0	0	0	0	1	2
Total	0	3	0	0	0	0	0	1	0	0	0	2	6
Grand Total	0	34	1	0	0	0	0	18	0	24	0	17	94
Apprch %	0	97.1	2.9	0	0	0	0	100	0	58.5	0	41.5	
Total %	0	36.2	1.1	0	0	0	0	19.1	0	25.5	0	18.1	

CITY TRAFFIC COUNTERS

626.991.7522

www.ctcounters.com

File Name : 5NBLC_Jerome_5Axle
Site Code : 00000000
Start Date : 1/15/2014
Page No : 2

	Laurel Canyon Blvd Southbound				Jerome St Westbound				Laurel Canyon Blvd Northbound				I-5 NB Ramp Eastbound				
Start Time	Left	Thru	Right	App. Total	Left	Thru	Right	App. Total	Left	Thru	Right	App. Total	Left	Thru	Right	App. Total	Int. Total
Peak Hour Analysis From 07:00 AM to 09:45 AM - Peak 1 of 1																	
Peak Hour for Entire Intersection Begins at 07:00 AM																	
07:00 AM	0	1	0	1	0	0	0	0	0	1	0	1	0	0	0	0	2
07:15 AM	0	2	0	2	0	0	0	0	0	0	0	0	0	0	**5**	**5**	7
07:30 AM	0	2	0	2	0	0	0	0	0	**5**	0	**5**	0	0	0	0	7
07:45 AM	0	**5**	0	**5**	0	0	0	0	0	3	0	3	0	0	1	1	**9**
Total Volume	0	10	0	10	0	0	0	0	0	9	0	9	0	0	6	6	25
% App. Total	0	100	0		0	0	0		0	100	0		0	0	100		
PHF	.000	.500	.000	.500	.000	.000	.000	.000	.000	.450	.000	.450	.000	.000	.300	.300	.694

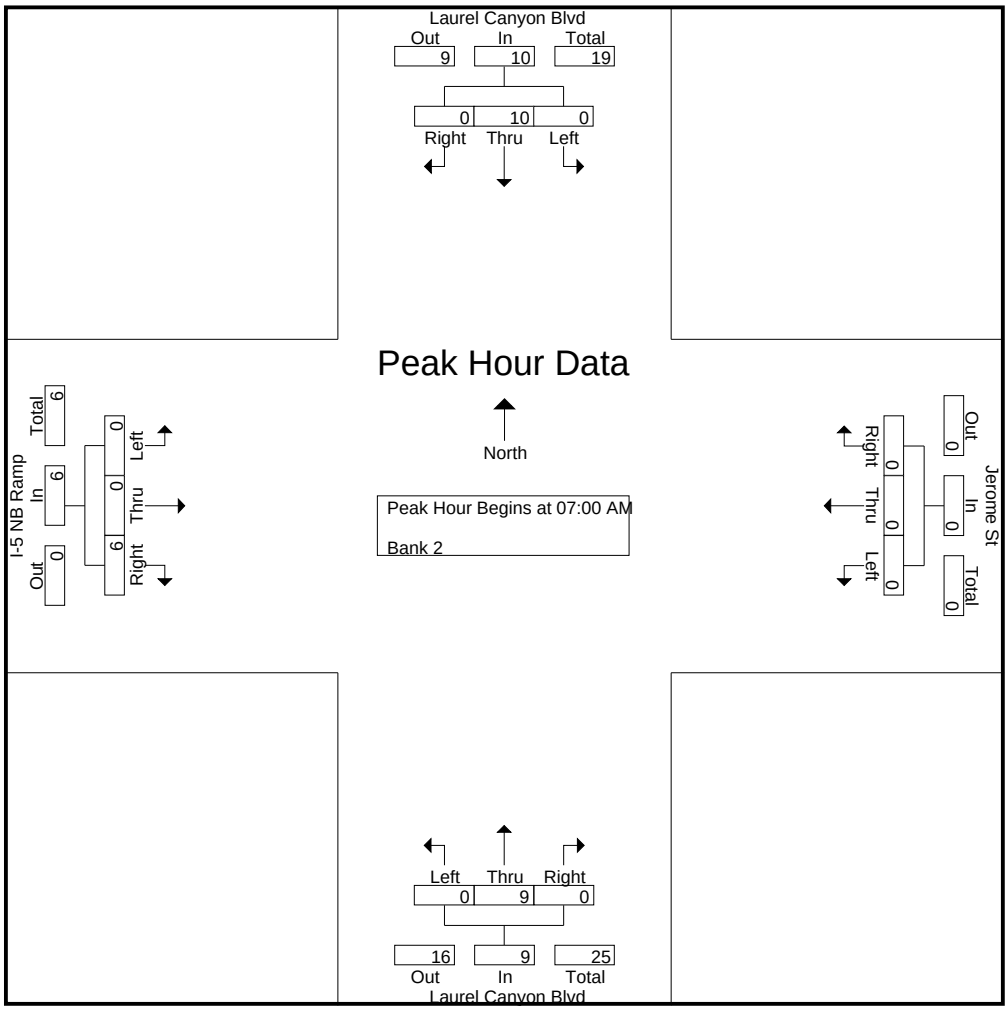

CITY TRAFFIC COUNTERS

626.991.7522

www.ctcounters.com

File Name : 5NBLC_Jerome_5Axle
Site Code : 00000000
Start Date : 1/15/2014
Page No : 3

	Laurel Canyon Blvd Southbound				Jerome St Westbound				Laurel Canyon Blvd Northbound				I-5 NB Ramp Eastbound				
Start Time	Left	Thru	Right	App. Total	Left	Thru	Right	App. Total	Left	Thru	Right	App. Total	Left	Thru	Right	App. Total	Int. Total
Peak Hour Analysis From 10:00 AM to 01:45 PM - Peak 1 of 1																	
Peak Hour for Entire Intersection Begins at 01:00 PM																	
01:00 PM	0	**2**	0	**2**	0	0	0	0	0	0	0	0	**2**	0	0	**2**	**4**
01:15 PM	0	2	0	2	0	0	0	0	0	0	0	0	1	0	**1**	2	4
01:30 PM	0	1	0	1	0	0	0	0	0	**1**	0	**1**	1	0	1	2	4
01:45 PM	0	1	0	1	0	0	0	0	0	1	0	1	2	0	0	2	4
Total Volume	0	6	0	6	0	0	0	0	0	2	0	2	6	0	2	8	16
% App. Total	0	100	0		0	0	0		0	100	0		75	0	25		
PHF	.000	.750	.000	.750	.000	.000	.000	.000	.000	.500	.000	.500	.750	.000	.500	1.00	1.00

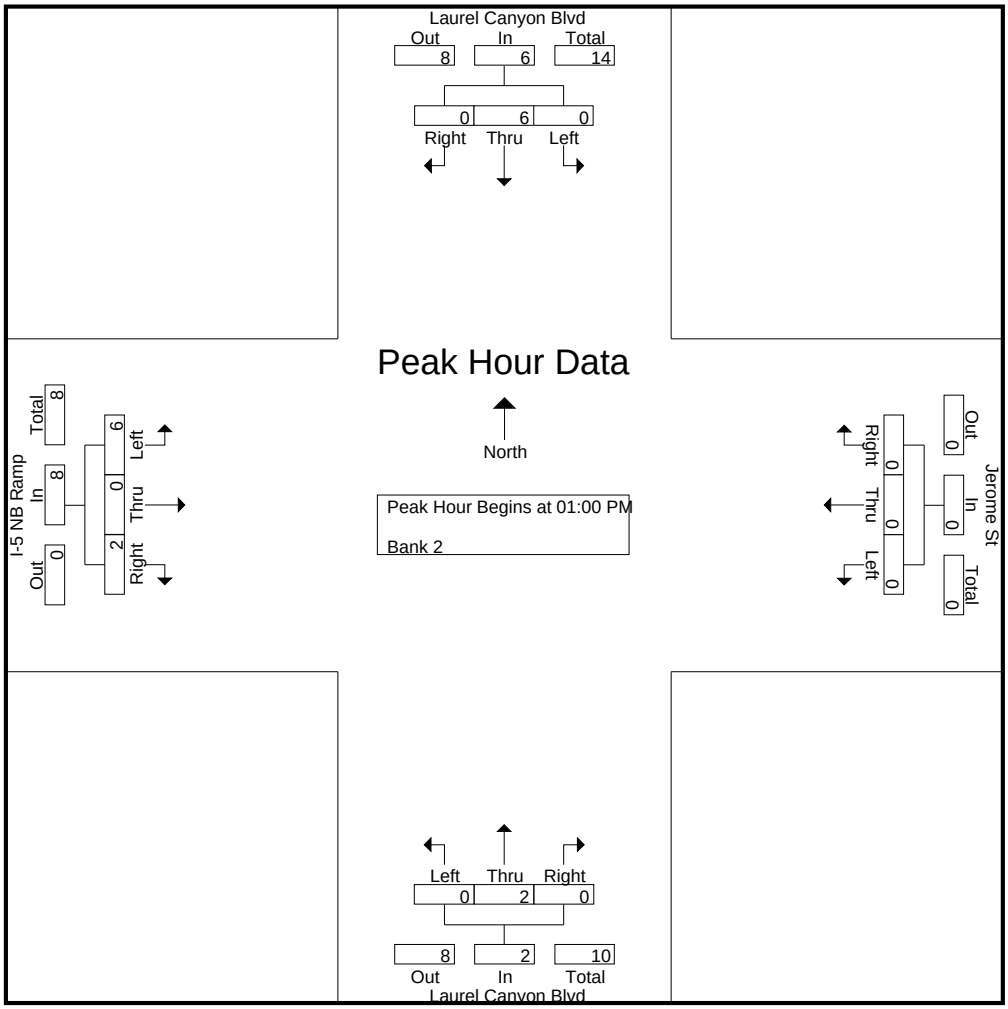

CITY TRAFFIC COUNTERS

626.991.7522

www.ctcounters.com

File Name : 5NBLC_Jerome_5Axle
Site Code : 00000000
Start Date : 1/15/2014
Page No : 4

	Laurel Canyon Blvd Southbound				Jerome St Westbound				Laurel Canyon Blvd Northbound				I-5 NB Ramp Eastbound				
Start Time	Left	Thru	Right	App. Total	Left	Thru	Right	App. Total	Left	Thru	Right	App. Total	Left	Thru	Right	App. Total	Int. Total
Peak Hour Analysis From 02:00 PM to 05:45 PM - Peak 1 of 1																	
Peak Hour for Entire Intersection Begins at 03:00 PM																	
03:00 PM	0	1	0	1	0	0	0	0	0	1	0	1	**1**	0	0	**1**	**3**
03:15 PM	0	**2**	0	**2**	0	0	0	0	0	0	0	0	0	0	0	0	2
03:30 PM	0	1	0	1	0	0	0	0	0	**2**	0	**2**	0	0	0	0	3
03:45 PM	0	1	0	1	0	0	0	0	0	0	0	0	0	0	0	0	1
Total Volume	0	5	0	5	0	0	0	0	0	3	0	3	1	0	0	1	9
% App. Total	0	100	0		0	0	0		0	100	0		100	0	0		
PHF	.000	.625	.000	.625	.000	.000	.000	.000	.000	.375	.000	.375	.250	.000	.000	.250	.750

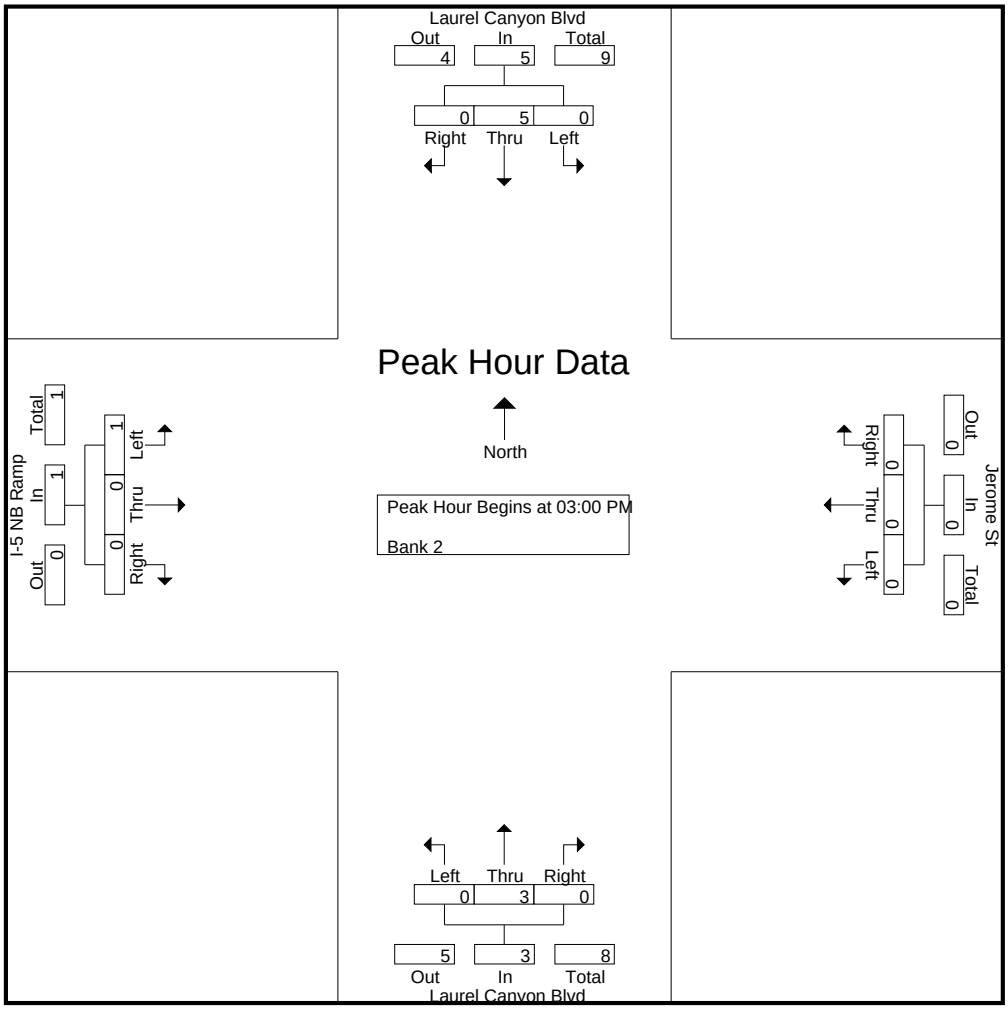

CITY TRAFFIC COUNTERS

626.991.7522

www.ctcounters.com

File Name : LCSheldon
Site Code : 00000000
Start Date : 1/15/2014
Page No : 1

Groups Printed- Unshifted

	Laurel Canyon Blvd Southbound			Sheldon St Westbound			Laurel Canyon Blvd Northbound			Sheldon St Eastbound			
Start Time	Left	Thru	Right	Left	Thru	Right	Left	Thru	Right	Left	Thru	Right	Int. Total
07:00 AM	22	241	37	26	112	26	7	41	21	20	107	36	696
07:15 AM	21	227	52	22	204	20	11	75	27	26	165	32	882
07:30 AM	29	299	46	13	219	21	7	76	69	24	180	35	1018
07:45 AM	46	301	33	13	185	29	7	83	57	25	189	18	986
Total	118	1068	168	74	720	96	32	275	174	95	641	121	3582
08:00 AM	31	259	21	15	173	30	4	82	32	14	163	28	852
08:15 AM	32	273	19	16	149	32	2	49	35	15	115	34	771
08:30 AM	23	210	16	22	104	20	0	49	24	9	89	18	584
08:45 AM	35	186	9	14	97	16	5	61	45	14	79	20	581
Total	121	928	65	67	523	98	11	241	136	52	446	100	2788
09:00 AM	23	180	18	17	92	10	1	51	22	11	96	23	544
09:15 AM	19	138	15	22	81	19	2	32	29	13	102	28	500
09:30 AM	22	85	16	28	92	15	2	36	45	13	86	20	460
09:45 AM	16	64	21	31	61	16	4	45	36	6	77	18	395
Total	80	467	70	98	326	60	9	164	132	43	361	89	1899
12:00 PM	27	105	26	30	74	17	8	72	44	16	81	23	523
12:15 PM	30	97	29	25	70	16	1	56	46	10	89	23	492
12:30 PM	14	102	11	25	84	26	4	54	30	14	102	33	499
12:45 PM	23	110	21	22	69	22	3	53	45	13	65	18	464
Total	94	414	87	102	297	81	16	235	165	53	337	97	1978
01:00 PM	14	87	31	38	40	25	0	70	41	10	113	16	485
01:15 PM	20	83	26	35	47	20	5	41	30	13	87	11	418
01:30 PM	14	84	19	26	70	17	3	56	37	15	115	10	466
01:45 PM	15	103	22	22	78	16	3	79	36	17	78	16	485
Total	63	357	98	121	235	78	11	246	144	55	393	53	1854
03:00 PM	23	142	26	19	180	17	1	162	32	26	173	13	814
03:15 PM	26	140	24	11	157	14	2	176	39	24	170	15	798
03:30 PM	21	165	14	10	138	19	5	158	42	28	201	16	817
03:45 PM	22	170	20	10	133	22	5	127	44	23	174	14	764
Total	92	617	84	50	608	72	13	623	157	101	718	58	3193
04:00 PM	23	170	14	17	122	20	2	131	36	19	204	17	775
04:15 PM	19	160	10	11	111	21	0	141	29	24	206	18	750
04:30 PM	17	163	14	18	103	27	1	147	23	23	196	18	750
04:45 PM	20	186	8	16	150	26	3	181	39	23	202	16	870
Total	79	679	46	62	486	94	6	600	127	89	808	69	3145
05:00 PM	20	197	12	13	163	15	2	179	43	23	195	17	879
05:15 PM	16	188	13	17	146	21	4	186	47	30	191	19	878
05:30 PM	17	186	14	25	139	23	7	199	43	30	218	15	916
05:45 PM	18	177	18	19	89	24	0	189	42	38	205	16	835
Total	71	748	57	74	537	83	13	753	175	121	809	67	3508
Grand Total	718	5278	675	648	3732	662	111	3137	1210	609	4513	654	21947
Apprch %	10.8	79.1	10.1	12.9	74	13.1	2.5	70.4	27.1	10.5	78.1	11.3	
Total %	3.3	24	3.1	3	17	3	0.5	14.3	5.5	2.8	20.6	3	

CITY TRAFFIC COUNTERS

626.991.7522

www.ctcounters.com

File Name : LCSheldon
Site Code : 00000000
Start Date : 1/15/2014
Page No : 2

	Laurel Canyon Blvd Southbound				Sheldon St Westbound				Laurel Canyon Blvd Northbound				Sheldon St Eastbound				
Start Time	Left	Thru	Right	App. Total	Left	Thru	Right	App. Total	Left	Thru	Right	App. Total	Left	Thru	Right	App. Total	Int. Total
Peak Hour Analysis From 07:00 AM to 09:45 AM - Peak 1 of 1																	
Peak Hour for Entire Intersection Begins at 07:15 AM																	
07:15 AM	21	227	**52**	300	**22**	204	20	246	**11**	75	27	113	**26**	165	32	223	882
07:30 AM	29	299	46	374	13	**219**	21	**253**	7	76	**69**	**152**	24	180	**35**	**239**	**1018**
07:45 AM	**46**	**301**	33	**380**	13	185	29	227	7	**83**	57	147	25	**189**	18	232	986
08:00 AM	31	259	21	311	15	173	**30**	218	4	82	32	118	14	163	28	205	852
Total Volume	127	1086	152	1365	63	781	100	944	29	316	185	530	89	697	113	899	3738
% App. Total	9.3	79.6	11.1		6.7	82.7	10.6		5.5	59.6	34.9		9.9	77.5	12.6		
PHF	.690	.902	.731	.898	.716	.892	.833	.933	.659	.952	.670	.872	.856	.922	.807	.940	.918

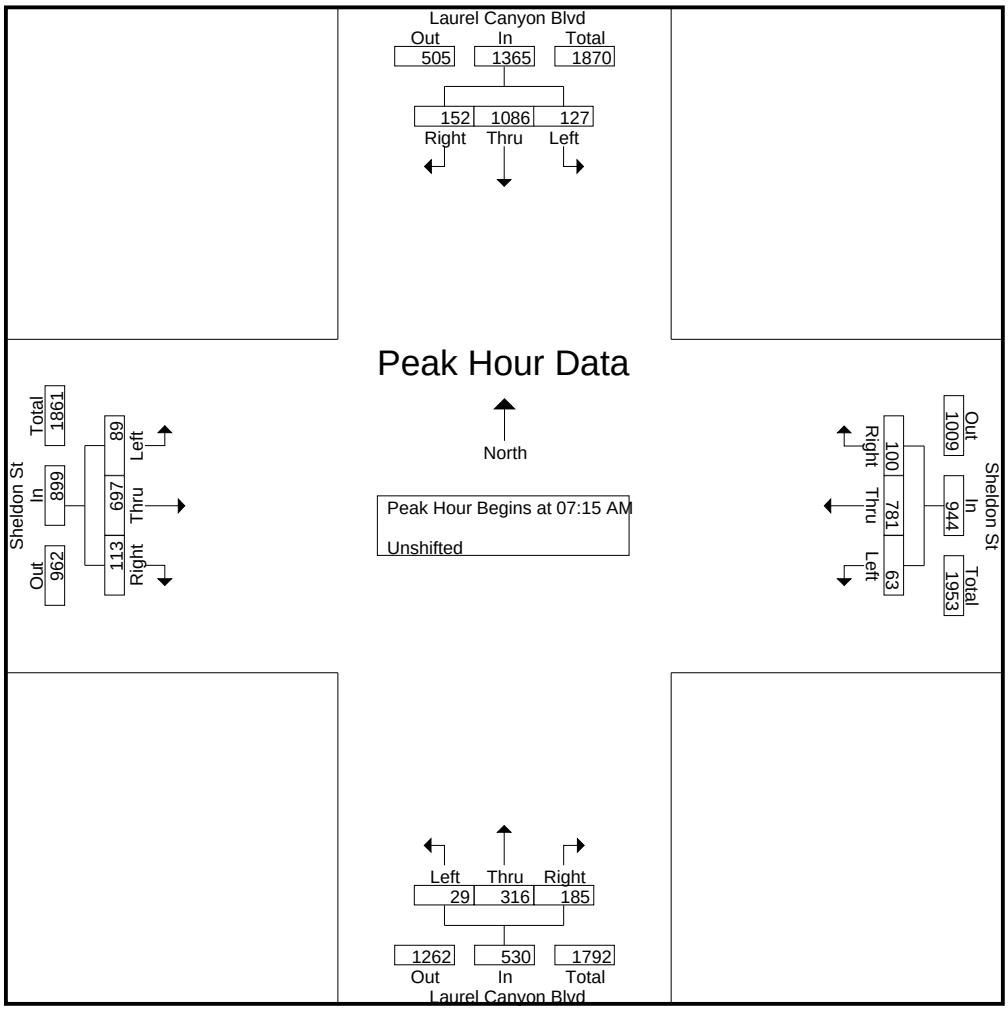

CITY TRAFFIC COUNTERS

626.991.7522

www.ctcounters.com

File Name : LCSheldon
Site Code : 00000000
Start Date : 1/15/2014
Page No : 3

	Laurel Canyon Blvd Southbound				Sheldon St Westbound				Laurel Canyon Blvd Northbound				Sheldon St Eastbound				
Start Time	Left	Thru	Right	App. Total	Left	Thru	Right	App. Total	Left	Thru	Right	App. Total	Left	Thru	Right	App. Total	Int. Total
Peak Hour Analysis From 10:00 AM to 01:45 PM - Peak 1 of 1																	
Peak Hour for Entire Intersection Begins at 12:00 PM																	
12:00 PM	27	105	26	**158**	**30**	74	17	121	**8**	**72**	44	**124**	**16**	81	23	120	**523**
12:15 PM	**30**	97	**29**	156	25	70	16	111	1	56	**46**	103	10	89	23	122	492
12:30 PM	14	102	11	127	25	**84**	**26**	**135**	4	54	30	88	14	**102**	**33**	**149**	499
12:45 PM	23	**110**	21	154	22	69	22	113	3	53	45	101	13	65	18	96	464
Total Volume	94	414	87	595	102	297	81	480	16	235	165	416	53	337	97	487	1978
% App. Total	15.8	69.6	14.6		21.2	61.9	16.9		3.8	56.5	39.7		10.9	69.2	19.9		
PHF	.783	.941	.750	.941	.850	.884	.779	.889	.500	.816	.897	.839	.828	.826	.735	.817	.946

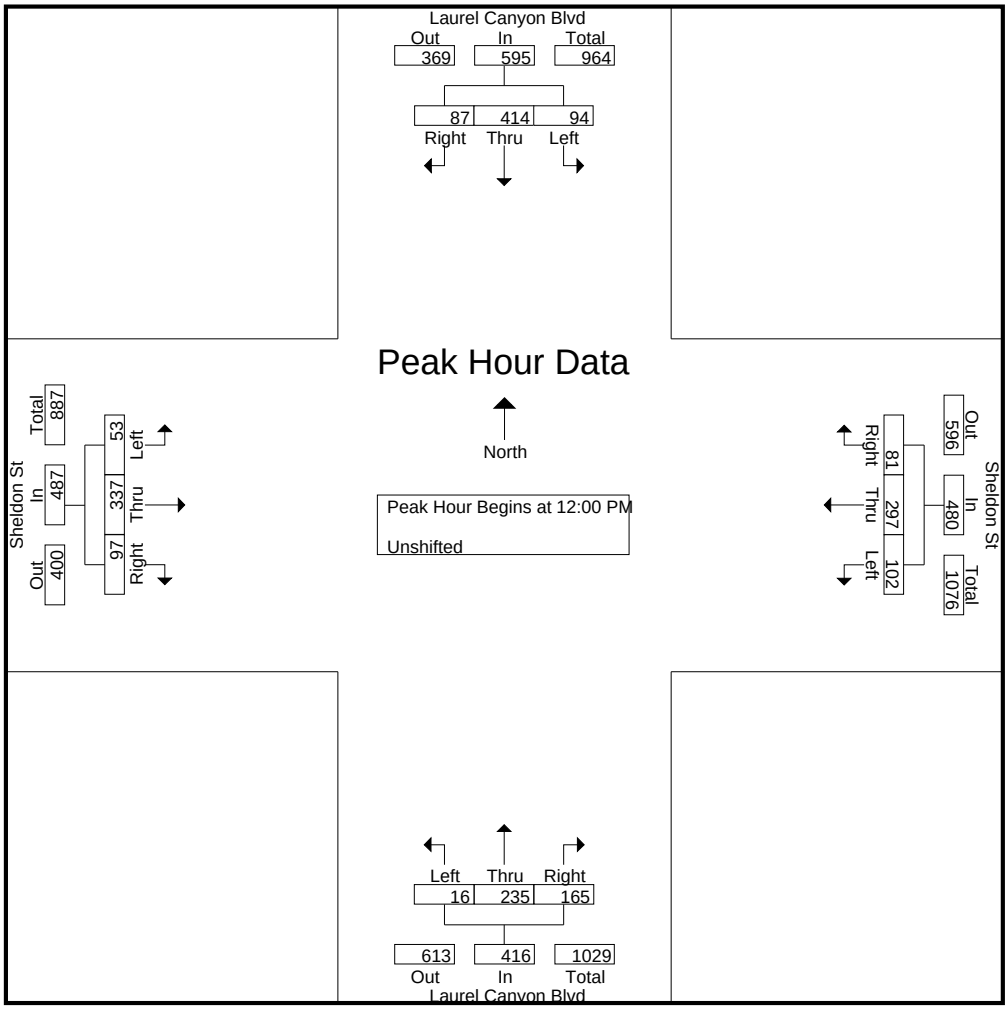

CITY TRAFFIC COUNTERS

626.991.7522

www.ctcounters.com

File Name : LCSheldon
Site Code : 00000000
Start Date : 1/15/2014
Page No : 4

	Laurel Canyon Blvd Southbound				Sheldon St Westbound				Laurel Canyon Blvd Northbound				Sheldon St Eastbound				
Start Time	Left	Thru	Right	App. Total	Left	Thru	Right	App. Total	Left	Thru	Right	App. Total	Left	Thru	Right	App. Total	Int. Total
Peak Hour Analysis From 02:00 PM to 05:45 PM - Peak 1 of 1																	
Peak Hour for Entire Intersection Begins at 04:45 PM																	
04:45 PM	**20**	186	8	214	16	150	**26**	**192**	3	181	39	223	23	202	16	241	870
05:00 PM	20	**197**	12	**229**	13	**163**	15	191	2	179	43	224	23	195	17	235	879
05:15 PM	16	188	13	217	17	146	21	184	4	186	**47**	237	**30**	191	**19**	240	878
05:30 PM	17	186	**14**	217	**25**	139	23	187	**7**	**199**	43	**249**	30	**218**	15	**263**	**916**
Total Volume	73	757	47	877	71	598	85	754	16	745	172	933	106	806	67	979	3543
% App. Total	8.3	86.3	5.4		9.4	79.3	11.3		1.7	79.8	18.4		10.8	82.3	6.8		
PHF	.913	.961	.839	.957	.710	.917	.817	.982	.571	.936	.915	.937	.883	.924	.882	.931	.967

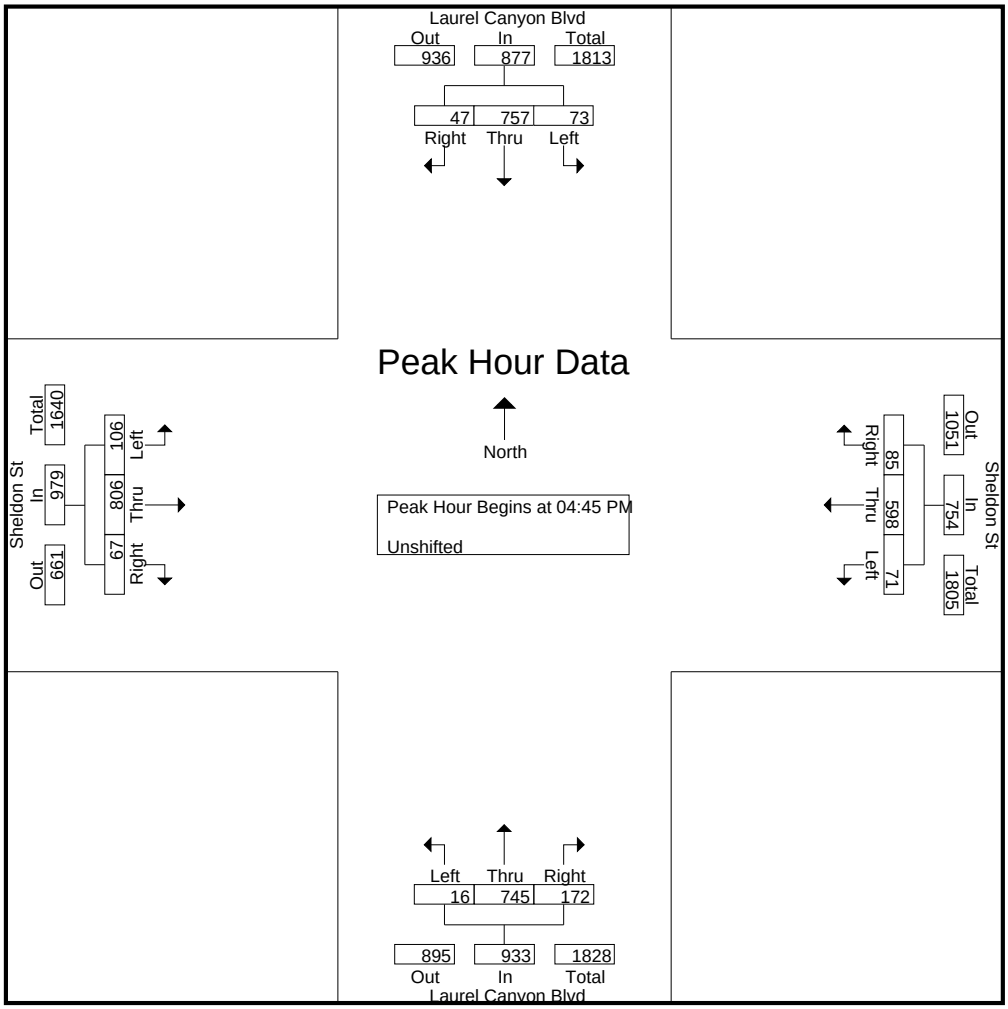

CITY TRAFFIC COUNTERS

626.991.7522

www.ctcounters.com

File Name : LCSheldon_MC
Site Code : 00000000
Start Date : 1/15/2014
Page No : 1

Groups Printed- Bank 2

	Laurel Canyon Blvd Southbound			Sheldon St Westbound			Laurel Canyon Blvd Northbound			Sheldon St Eastbound			
Start Time	Left	Thru	Right	Left	Thru	Right	Left	Thru	Right	Left	Thru	Right	Int. Total
07:00 AM	0	0	0	0	1	0	0	2	1	0	0	0	4
07:15 AM	0	0	0	0	1	0	0	0	0	0	1	0	2
07:30 AM	0	0	0	0	0	0	0	0	0	0	1	0	1
07:45 AM	0	0	0	0	0	0	0	0	1	1	1	0	3
Total	0	0	0	0	2	0	0	2	2	1	3	0	10
08:15 AM	0	1	0	1	2	0	0	0	1	0	0	0	5
08:30 AM	0	1	0	0	0	0	0	1	0	0	0	0	2
Total	0	2	0	1	2	0	0	1	1	0	0	0	7
09:00 AM	0	1	0	0	0	0	0	0	0	0	0	0	1
09:15 AM	0	0	0	0	0	0	0	0	0	0	1	0	1
09:30 AM	0	0	0	0	1	0	0	0	0	0	0	0	1
09:45 AM	0	0	0	0	1	1	0	1	0	0	0	0	3
Total	0	1	0	0	2	1	0	1	0	0	1	0	6
12:00 PM	0	0	0	0	1	0	0	1	0	0	0	0	2
12:15 PM	0	0	0	0	1	0	0	0	0	0	0	0	1
12:30 PM	0	1	0	0	0	0	0	0	0	0	0	0	1
Total	0	1	0	0	2	0	0	1	0	0	0	0	4
01:00 PM	0	0	0	0	0	0	0	0	0	0	1	0	1
01:45 PM	0	0	0	1	1	0	0	0	0	0	0	0	2
Total	0	0	0	1	1	0	0	0	0	0	1	0	3
03:15 PM	0	0	0	0	1	0	0	0	0	0	1	0	2
03:45 PM	0	1	0	0	0	0	0	0	0	0	0	0	1
Total	0	1	0	0	1	0	0	0	0	0	1	0	3
04:00 PM	0	0	0	0	1	0	0	0	0	0	1	0	2
04:15 PM	0	0	0	0	0	0	0	0	1	0	1	0	2
04:30 PM	0	1	0	0	0	0	0	1	0	0	1	0	3
04:45 PM	0	0	0	0	1	0	0	0	1	0	0	0	2
Total	0	1	0	0	2	0	0	1	2	0	3	0	9
05:00 PM	0	0	0	0	1	0	0	0	0	0	2	0	3
05:15 PM	0	0	0	0	0	0	0	0	1	0	0	0	1
05:45 PM	0	0	0	0	1	1	0	0	0	0	0	0	2
Total	0	0	0	0	2	1	0	0	1	0	2	0	6
Grand Total	0	6	0	2	14	2	0	6	6	1	11	0	48
Apprch %	0	100	0	11.1	77.8	11.1	0	50	50	8.3	91.7	0	
Total %	0	12.5	0	4.2	29.2	4.2	0	12.5	12.5	2.1	22.9	0	

CITY TRAFFIC COUNTERS

626.991.7522

www.ctcounters.com

File Name : LCSheldon_MC
Site Code : 00000000
Start Date : 1/15/2014
Page No : 2

	Laurel Canyon Blvd Southbound				Sheldon St Westbound				Laurel Canyon Blvd Northbound				Sheldon St Eastbound				
Start Time	Left	Thru	Right	App. Total	Left	Thru	Right	App. Total	Left	Thru	Right	App. Total	Left	Thru	Right	App. Total	Int. Total
Peak Hour Analysis From 07:00 AM to 09:45 AM - Peak 1 of 1																	
Peak Hour for Entire Intersection Begins at 07:00 AM																	
07:00 AM	0	0	0	0	0	**1**	0	**1**	0	**2**	**1**	**3**	0	0	0	0	**4**
07:15 AM	0	0	0	0	0	1	0	1	0	0	0	0	0	**1**	0	1	2
07:30 AM	0	0	0	0	0	0	0	0	0	0	0	0	0	1	0	1	1
07:45 AM	0	0	0	0	0	0	0	0	0	0	1	1	**1**	1	0	**2**	3
Total Volume	0	0	0	0	0	2	0	2	0	2	2	4	1	3	0	4	10
% App. Total	0	0	0		0	100	0		0	50	50		25	75	0		
PHF	.000	.000	.000	.000	.000	.500	.000	.500	.000	.250	.500	.333	.250	.750	.000	.500	.625

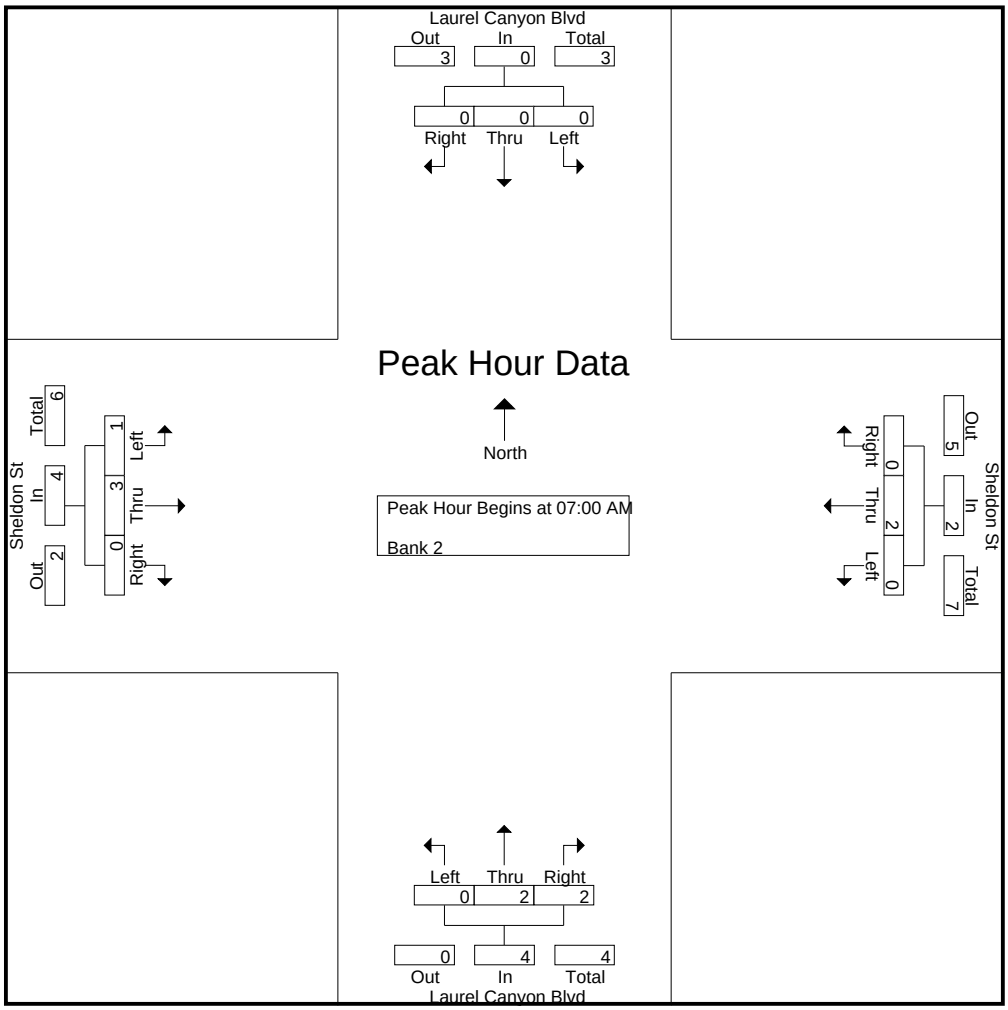

CITY TRAFFIC COUNTERS

626.991.7522

www.ctcounters.com

File Name : LCSheldon_MC
Site Code : 00000000
Start Date : 1/15/2014
Page No : 3

	Laurel Canyon Blvd Southbound				Sheldon St Westbound				Laurel Canyon Blvd Northbound				Sheldon St Eastbound				
Start Time	Left	Thru	Right	App. Total	Left	Thru	Right	App. Total	Left	Thru	Right	App. Total	Left	Thru	Right	App. Total	Int. Total
Peak Hour Analysis From 10:00 AM to 01:45 PM - Peak 1 of 1																	
Peak Hour for Entire Intersection Begins at 11:45 AM																	
11:45 AM	0	0	0	0	0	0	0	0	0	0	0	0	0	0	0	0	0
12:00 PM	0	0	0	0	0	**1**	0	**1**	0	**1**	0	**1**	0	0	0	0	**2**
12:15 PM	0	0	0	0	0	1	0	1	0	0	0	0	0	0	0	0	1
12:30 PM	0	**1**	0	**1**	0	0	0	0	0	0	0	0	0	0	0	0	1
Total Volume	0	1	0	1	0	2	0	2	0	1	0	1	0	0	0	0	4
% App. Total	0	100	0		0	100	0		0	100	0		0	0	0		
PHF	.000	.250	.000	.250	.000	.500	.000	.500	.000	.250	.000	.250	.000	.000	.000	.000	.500

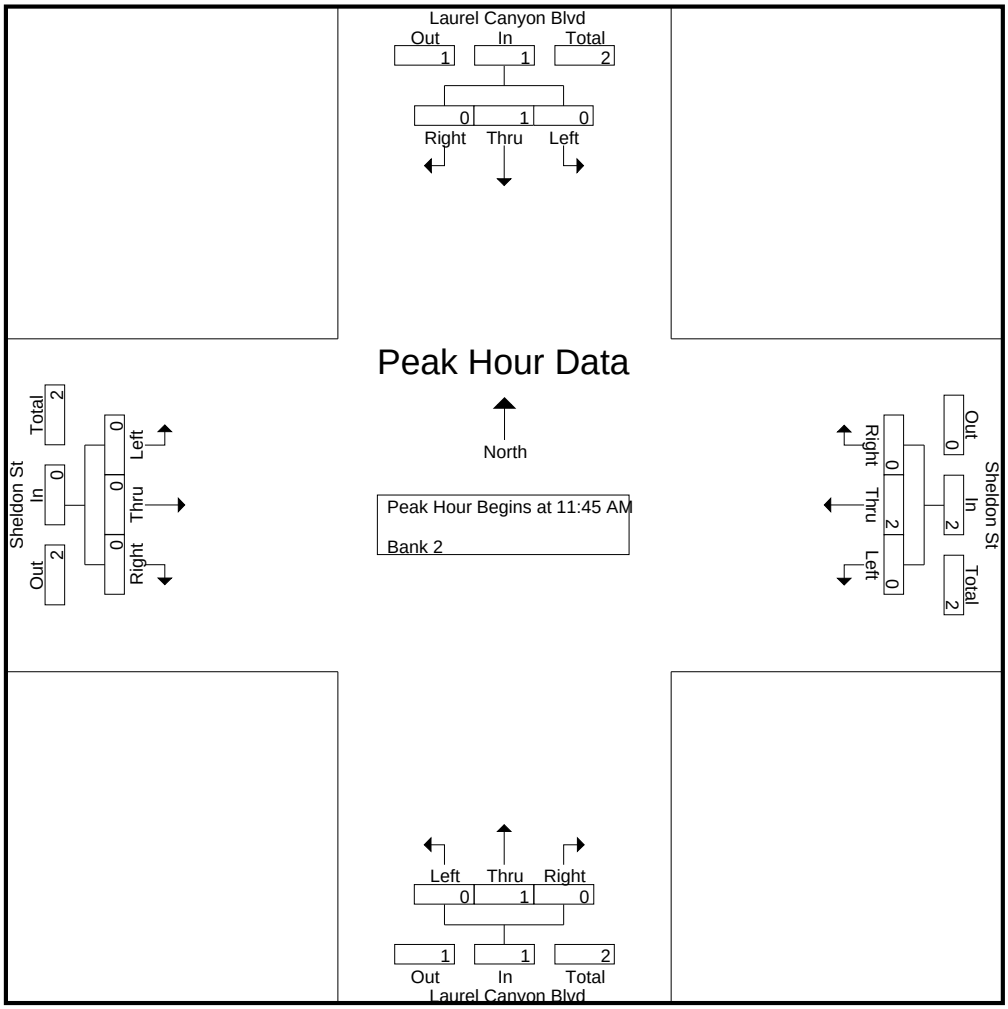

CITY TRAFFIC COUNTERS

626.991.7522

www.ctcounters.com

File Name : LCSheldon_MC
Site Code : 00000000
Start Date : 1/15/2014
Page No : 4

	Laurel Canyon Blvd Southbound				Sheldon St Westbound				Laurel Canyon Blvd Northbound				Sheldon St Eastbound				
Start Time	Left	Thru	Right	App. Total	Left	Thru	Right	App. Total	Left	Thru	Right	App. Total	Left	Thru	Right	App. Total	Int. Total
Peak Hour Analysis From 02:00 PM to 05:45 PM - Peak 1 of 1																	
Peak Hour for Entire Intersection Begins at 04:15 PM																	
04:15 PM	0	0	0	0	0	0	0	0	0	0	**1**	**1**	0	1	0	1	2
04:30 PM	0	**1**	0	**1**	0	0	0	0	0	**1**	0	1	0	1	0	1	**3**
04:45 PM	0	0	0	0	0	**1**	0	**1**	0	0	1	1	0	0	0	0	2
05:00 PM	0	0	0	0	0	1	0	1	0	0	0	0	0	**2**	0	**2**	3
Total Volume	0	1	0	1	0	2	0	2	0	1	2	3	0	4	0	4	10
% App. Total	0	100	0		0	100	0		0	33.3	66.7		0	100	0		
PHF	.000	.250	.000	.250	.000	.500	.000	.500	.000	.250	.500	.750	.000	.500	.000	.500	.833

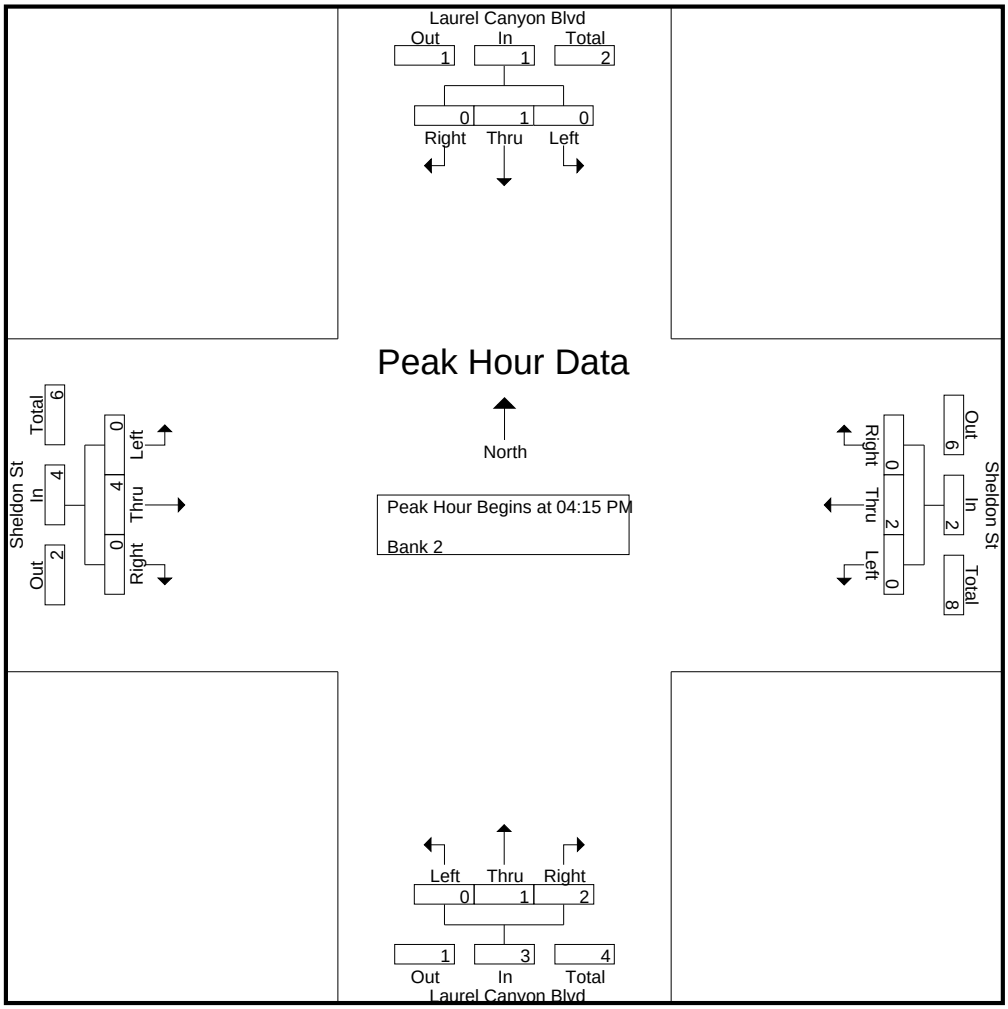

CITY TRAFFIC COUNTERS

626.991.7522

www.ctcounters.com

File Name : LCSheldon_Bus
Site Code : 00000000
Start Date : 1/15/2014
Page No : 1

Groups Printed- Bank 1

	Laurel Canyon Blvd Southbound			Sheldon St Westbound			Laurel Canyon Blvd Northbound			Sheldon St Eastbound			
Start Time	Left	Thru	Right	Left	Thru	Right	Left	Thru	Right	Left	Thru	Right	Int. Total
07:00 AM	0	2	1	0	2	0	0	3	1	1	2	0	12
07:15 AM	0	3	0	0	0	0	1	2	0	0	3	0	9
07:30 AM	0	2	0	0	0	0	0	1	0	0	0	0	3
07:45 AM	0	1	0	0	2	0	0	2	0	0	1	0	6
Total	0	8	1	0	4	0	1	8	1	1	6	0	30
08:00 AM	0	2	0	0	0	0	0	1	0	0	1	0	4
08:15 AM	0	5	0	0	0	0	0	1	0	0	1	0	7
08:30 AM	0	3	0	0	1	0	0	1	0	0	3	0	8
08:45 AM	0	2	0	0	1	0	0	2	0	0	2	0	7
Total	0	12	0	0	2	0	0	5	0	0	7	0	26
09:00 AM	0	3	0	0	1	0	0	1	2	0	0	0	7
09:15 AM	0	0	0	0	0	0	0	2	1	0	0	0	3
09:30 AM	0	1	0	0	0	0	0	1	0	0	1	0	3
09:45 AM	0	0	0	0	0	0	0	1	0	0	0	0	1
Total	0	4	0	0	1	0	0	5	3	0	1	0	14
12:00 PM	0	2	0	0	2	0	0	1	0	0	1	0	6
12:15 PM	0	0	0	0	1	0	0	0	0	0	0	0	1
12:30 PM	0	1	0	0	0	0	0	0	0	0	0	1	2
12:45 PM	0	0	0	0	0	0	0	2	0	0	0	0	2
Total	0	3	0	0	3	0	0	3	0	0	1	1	11
01:00 PM	1	1	0	0	1	0	0	0	0	0	0	0	3
01:15 PM	0	0	0	0	1	0	0	1	0	0	3	0	5
01:30 PM	0	1	0	0	0	0	0	0	0	0	1	0	2
01:45 PM	0	0	0	0	0	0	0	2	0	0	3	0	5
Total	1	2	0	0	2	0	0	3	0	0	7	0	15
03:00 PM	0	1	0	0	3	0	0	2	0	0	0	0	6
03:15 PM	0	3	0	0	1	0	1	2	0	0	1	0	8
03:30 PM	0	2	0	0	2	0	0	2	0	0	1	0	7
03:45 PM	0	3	0	0	2	0	0	4	0	0	0	0	9
Total	0	9	0	0	8	0	1	10	0	0	2	0	30
04:00 PM	1	3	0	0	1	0	0	0	0	0	5	0	10
04:15 PM	0	3	0	0	1	0	0	1	0	0	2	0	7
04:30 PM	0	2	0	0	0	0	0	1	0	0	1	0	4
04:45 PM	0	2	0	0	0	0	0	0	0	0	2	0	4
Total	1	10	0	0	2	0	0	2	0	0	10	0	25
05:00 PM	0	2	0	0	0	0	0	1	0	0	0	0	3
05:15 PM	0	1	0	0	0	0	0	1	0	0	0	0	2
05:30 PM	0	1	0	0	0	0	0	1	0	0	1	0	3
05:45 PM	0	0	0	0	0	0	0	1	0	0	1	0	2
Total	0	4	0	0	0	0	0	4	0	0	2	0	10
Grand Total	2	52	1	0	22	0	2	40	4	1	36	1	161
Apprch %	3.6	94.5	1.8	0	100	0	4.3	87	8.7	2.6	94.7	2.6	
Total %	1.2	32.3	0.6	0	13.7	0	1.2	24.8	2.5	0.6	22.4	0.6	

CITY TRAFFIC COUNTERS

626.991.7522

www.ctcounters.com

File Name : LCSheldon_Bus
Site Code : 00000000
Start Date : 1/15/2014
Page No : 2

	Laurel Canyon Blvd Southbound				Sheldon St Westbound				Laurel Canyon Blvd Northbound				Sheldon St Eastbound				
Start Time	Left	Thru	Right	App. Total	Left	Thru	Right	App. Total	Left	Thru	Right	App. Total	Left	Thru	Right	App. Total	Int. Total
Peak Hour Analysis From 07:00 AM to 09:45 AM - Peak 1 of 1																	
Peak Hour for Entire Intersection Begins at 07:00 AM																	
07:00 AM	0	2	**1**	**3**	0	**2**	0	**2**	0	**3**	**1**	**4**	**1**	2	0	**3**	**12**
07:15 AM	0	**3**	0	3	0	0	0	0	**1**	2	0	3	0	**3**	0	3	9
07:30 AM	0	2	0	2	0	0	0	0	0	1	0	1	0	0	0	0	3
07:45 AM	0	1	0	1	0	2	0	2	0	2	0	2	0	1	0	1	6
Total Volume	0	8	1	9	0	4	0	4	1	8	1	10	1	6	0	7	30
% App. Total	0	88.9	11.1		0	100	0		10	80	10		14.3	85.7	0		
PHF	.000	.667	.250	.750	.000	.500	.000	.500	.250	.667	.250	.625	.250	.500	.000	.583	.625

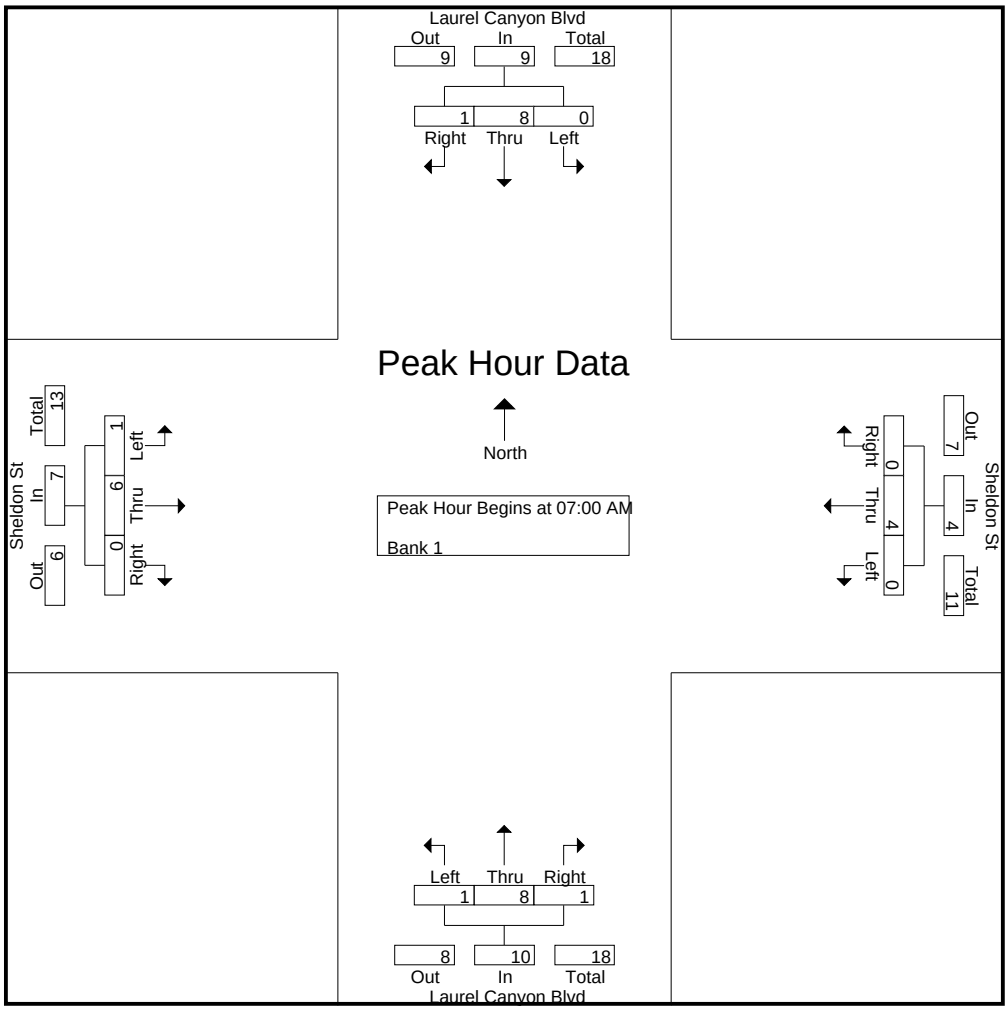

CITY TRAFFIC COUNTERS

626.991.7522

www.ctcounters.com

File Name : LCSheldon_Bus
Site Code : 00000000
Start Date : 1/15/2014
Page No : 3

	Laurel Canyon Blvd Southbound				Sheldon St Westbound				Laurel Canyon Blvd Northbound				Sheldon St Eastbound				
Start Time	Left	Thru	Right	App. Total	Left	Thru	Right	App. Total	Left	Thru	Right	App. Total	Left	Thru	Right	App. Total	Int. Total
Peak Hour Analysis From 10:00 AM to 01:45 PM - Peak 1 of 1																	
Peak Hour for Entire Intersection Begins at 01:00 PM																	
01:00 PM	**1**	**1**	0	**2**	0	**1**	0	**1**	0	0	0	0	0	0	0	0	3
01:15 PM	0	0	0	0	0	1	0	1	0	1	0	1	0	**3**	0	**3**	**5**
01:30 PM	0	1	0	1	0	0	0	0	0	0	0	0	0	1	0	1	2
01:45 PM	0	0	0	0	0	0	0	0	0	**2**	0	**2**	0	3	0	3	5
Total Volume	1	2	0	3	0	2	0	2	0	3	0	3	0	7	0	7	15
% App. Total	33.3	66.7	0		0	100	0		0	100	0		0	100	0		
PHF	.250	.500	.000	.375	.000	.500	.000	.500	.000	.375	.000	.375	.000	.583	.000	.583	.750

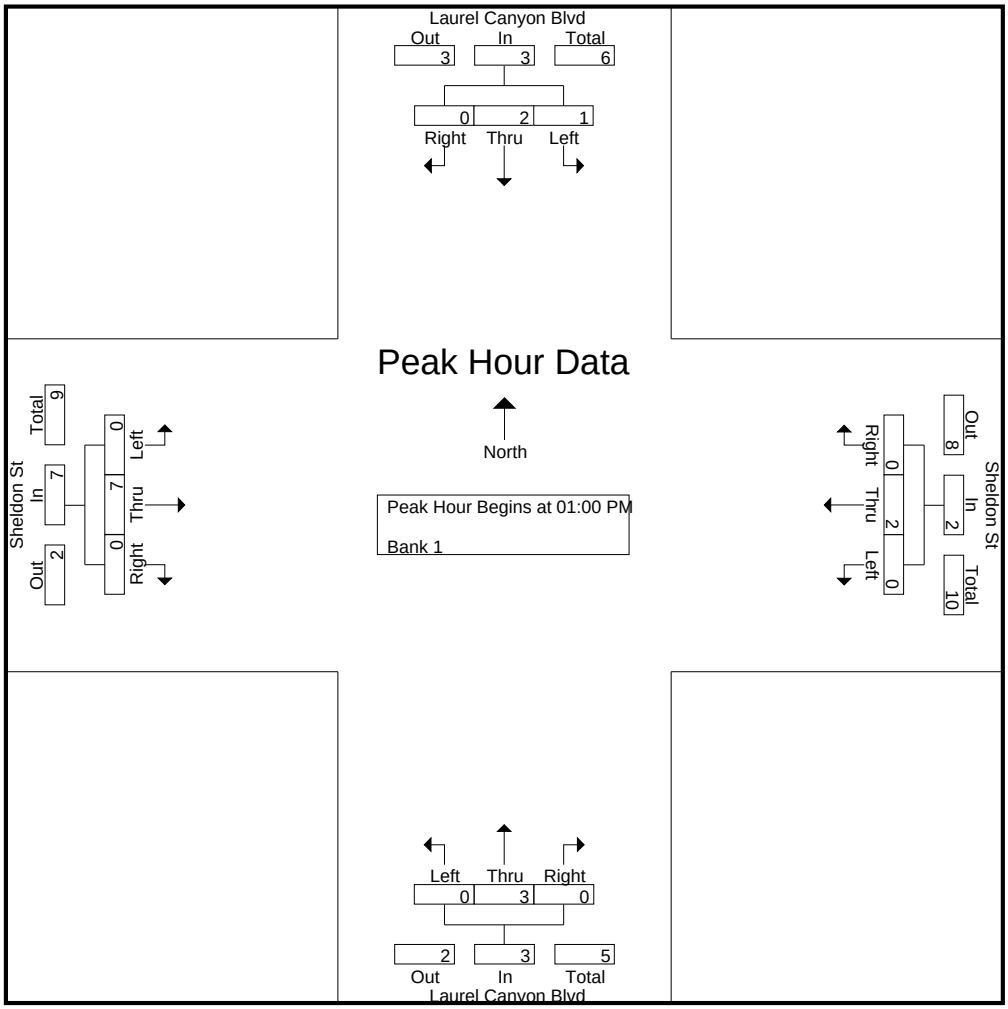

CITY TRAFFIC COUNTERS

626.991.7522

www.ctcounters.com

File Name : LCSheldon_Bus
Site Code : 00000000
Start Date : 1/15/2014
Page No : 4

	Laurel Canyon Blvd Southbound				Sheldon St Westbound				Laurel Canyon Blvd Northbound				Sheldon St Eastbound				
Start Time	Left	Thru	Right	App. Total	Left	Thru	Right	App. Total	Left	Thru	Right	App. Total	Left	Thru	Right	App. Total	Int. Total
Peak Hour Analysis From 02:00 PM to 05:45 PM - Peak 1 of 1																	
Peak Hour for Entire Intersection Begins at 03:15 PM																	
03:15 PM	0	**3**	0	3	0	1	0	1	**1**	2	0	3	0	1	0	1	8
03:30 PM	0	2	0	2	0	**2**	0	**2**	0	2	0	2	0	1	0	1	7
03:45 PM	0	3	0	3	0	2	0	2	0	**4**	0	**4**	0	0	0	0	9
04:00 PM	**1**	3	0	**4**	0	1	0	1	0	0	0	0	0	**5**	0	**5**	**10**
Total Volume	1	11	0	12	0	6	0	6	1	8	0	9	0	7	0	7	34
% App. Total	8.3	91.7	0		0	100	0		11.1	88.9	0		0	100	0		
PHF	.250	.917	.000	.750	.000	.750	.000	.750	.250	.500	.000	.563	.000	.350	.000	.350	.850

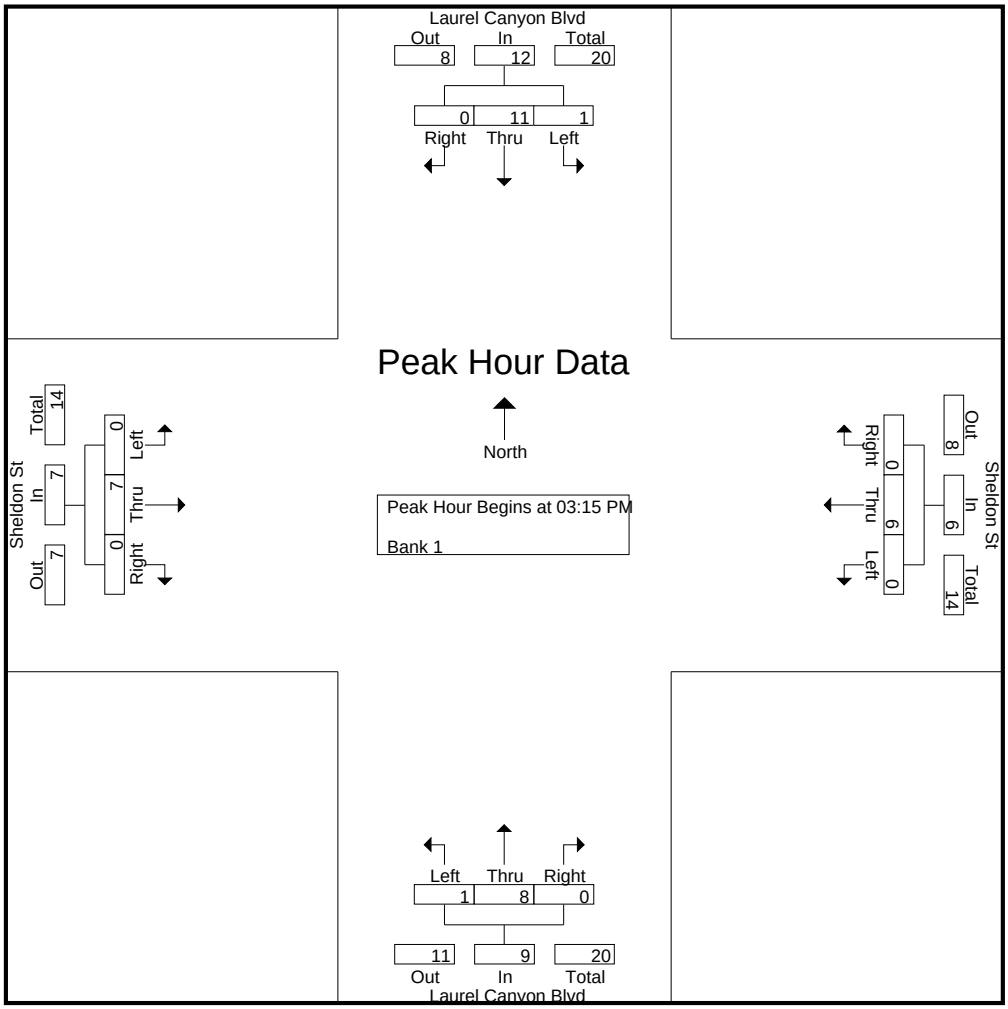

CITY TRAFFIC COUNTERS

626.991.7522

www.ctcounters.com

File Name : LCSheldon_2Axle
Site Code : 00000000
Start Date : 1/15/2014
Page No : 1

Groups Printed- Unshifted

	Laurel Canyon Blvd Southbound			Sheldon St Westbound			Laurel Canyon Blvd Northbound			Sheldon St Eastbound			
Start Time	Left	Thru	Right	Left	Thru	Right	Left	Thru	Right	Left	Thru	Right	Int. Total
07:00 AM	1	3	0	2	2	1	0	1	0	1	6	3	20
07:15 AM	1	1	0	1	3	2	0	1	3	0	3	4	19
07:30 AM	1	3	0	0	1	1	0	0	2	2	3	2	15
07:45 AM	1	4	1	1	2	0	0	1	2	0	4	0	16
Total	4	11	1	4	8	4	0	3	7	3	16	9	70
08:00 AM	1	8	2	0	3	2	0	3	1	0	6	1	27
08:15 AM	5	8	3	2	4	1	0	3	2	0	2	2	32
08:30 AM	1	10	4	3	0	1	0	0	0	1	4	0	24
08:45 AM	1	4	1	2	4	1	0	0	0	0	5	0	18
Total	8	30	10	7	11	5	0	6	3	1	17	3	101
09:00 AM	4	4	1	2	3	2	1	1	4	0	1	1	24
09:15 AM	0	8	2	4	1	1	2	3	2	2	10	1	36
09:30 AM	2	5	1	3	1	2	0	2	4	0	3	0	23
09:45 AM	4	2	3	1	1	1	0	2	1	2	1	0	18
Total	10	19	7	10	6	6	3	8	11	4	15	2	101
12:00 PM	1	0	2	1	0	1	0	0	1	1	4	1	12
12:15 PM	1	2	0	0	4	0	0	2	1	3	3	2	18
12:30 PM	1	2	0	1	3	1	0	0	3	1	0	1	13
12:45 PM	1	3	1	1	3	0	0	2	0	0	5	0	16
Total	4	7	3	3	10	2	0	4	5	5	12	4	59
01:00 PM	0	2	1	1	3	0	0	1	3	0	3	1	15
01:15 PM	1	3	1	0	4	1	0	2	1	0	2	0	15
01:30 PM	1	0	1	1	4	0	0	0	2	2	3	3	17
01:45 PM	0	4	1	1	4	1	0	1	5	0	6	1	24
Total	2	9	4	3	15	2	0	4	11	2	14	5	71
03:00 PM	0	3	0	1	3	1	0	4	2	0	6	0	20
03:15 PM	3	4	0	2	4	1	0	4	8	0	1	2	29
03:30 PM	2	3	0	2	5	0	0	1	5	2	4	0	24
03:45 PM	4	0	0	1	2	0	0	2	4	1	5	0	19
Total	9	10	0	6	14	2	0	11	19	3	16	2	92
04:00 PM	1	0	1	0	1	2	0	0	5	0	2	0	12
04:15 PM	1	1	0	1	2	1	0	3	1	1	6	0	17
04:30 PM	0	1	0	1	1	0	0	2	1	0	3	0	9
04:45 PM	0	1	0	1	1	0	0	2	3	2	4	2	16
Total	2	3	1	3	5	3	0	7	10	3	15	2	54
05:00 PM	1	2	0	2	2	0	0	4	3	1	2	1	18
05:15 PM	0	2	1	1	1	2	1	2	2	1	7	0	20
05:30 PM	1	0	0	1	0	0	0	3	5	2	2	0	14
05:45 PM	0	0	1	1	1	0	0	2	2	0	5	0	12
Total	2	4	2	5	4	2	1	11	12	4	16	1	64
Grand Total	41	93	28	41	73	26	4	54	78	25	121	28	612
Apprch %	25.3	57.4	17.3	29.3	52.1	18.6	2.9	39.7	57.4	14.4	69.5	16.1	
Total %	6.7	15.2	4.6	6.7	11.9	4.2	0.7	8.8	12.7	4.1	19.8	4.6	

CITY TRAFFIC COUNTERS

626.991.7522

www.ctcounters.com

File Name : LCSheldon_2Axle
Site Code : 00000000
Start Date : 1/15/2014
Page No : 2

	Laurel Canyon Blvd Southbound				Sheldon St Westbound				Laurel Canyon Blvd Northbound				Sheldon St Eastbound				
Start Time	Left	Thru	Right	App. Total	Left	Thru	Right	App. Total	Left	Thru	Right	App. Total	Left	Thru	Right	App. Total	Int. Total
Peak Hour Analysis From 07:00 AM to 09:45 AM - Peak 1 of 1																	
Peak Hour for Entire Intersection Begins at 08:30 AM																	
08:30 AM	1	**10**	**4**	**15**	3	0	1	4	0	0	0	0	1	4	0	5	24
08:45 AM	1	4	1	6	2	**4**	1	**7**	0	0	0	0	0	5	0	5	18
09:00 AM	**4**	4	1	9	2	3	**2**	7	1	1	**4**	6	0	1	**1**	2	24
09:15 AM	0	8	2	10	**4**	1	1	6	**2**	**3**	2	**7**	**2**	**10**	1	**13**	**36**
Total Volume	6	26	8	40	11	8	5	24	3	4	6	13	3	20	2	25	102
% App. Total	15	65	20		45.8	33.3	20.8		23.1	30.8	46.2		12	80	8		
PHF	.375	.650	.500	.667	.688	.500	.625	.857	.375	.333	.375	.464	.375	.500	.500	.481	.708

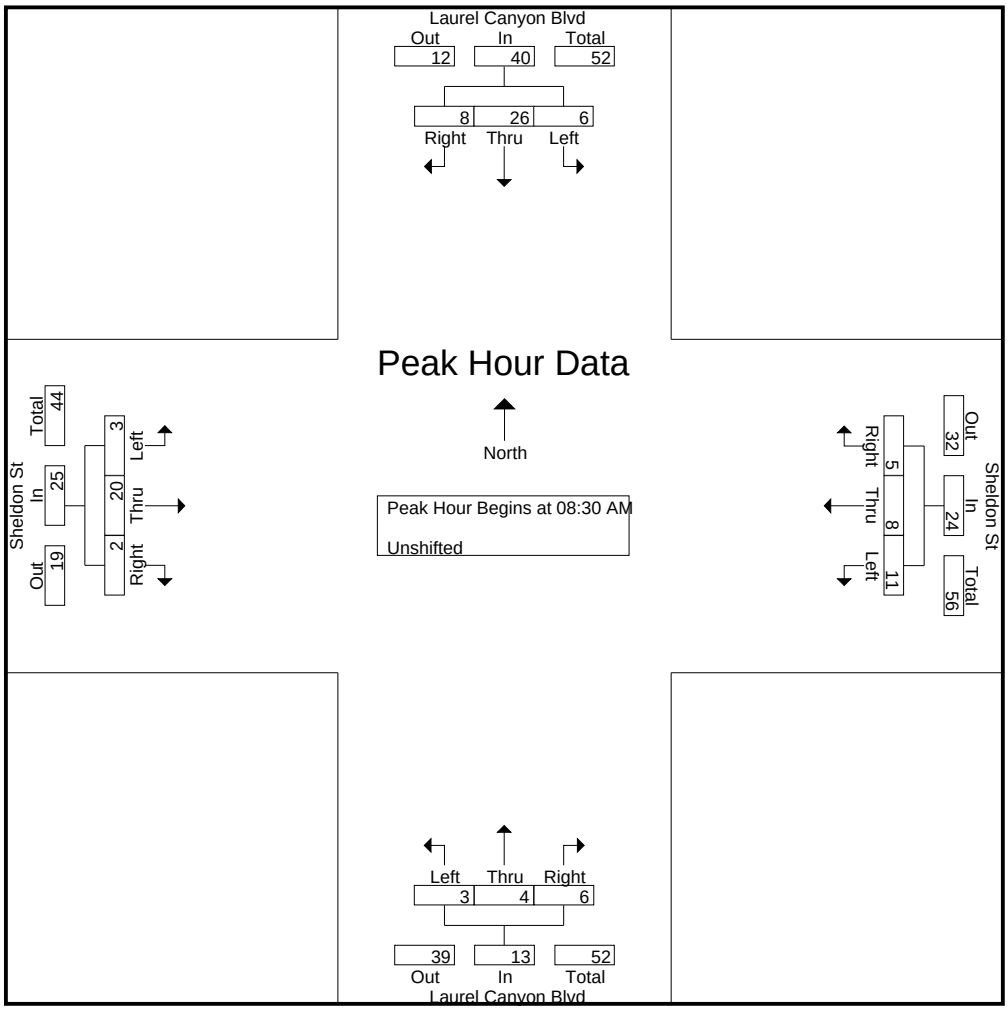

CITY TRAFFIC COUNTERS

626.991.7522

www.ctcounters.com

File Name : LCSheldon_2Axle
Site Code : 00000000
Start Date : 1/15/2014
Page No : 3

	Laurel Canyon Blvd Southbound				Sheldon St Westbound				Laurel Canyon Blvd Northbound				Sheldon St Eastbound				
Start Time	Left	Thru	Right	App. Total	Left	Thru	Right	App. Total	Left	Thru	Right	App. Total	Left	Thru	Right	App. Total	Int. Total
Peak Hour Analysis From 10:00 AM to 01:45 PM - Peak 1 of 1																	
Peak Hour for Entire Intersection Begins at 01:00 PM																	
01:00 PM	0	2	**1**	3	**1**	3	0	4	0	1	3	4	0	3	1	4	15
01:15 PM	**1**	3	1	**5**	0	**4**	**1**	5	0	**2**	1	3	0	2	0	2	15
01:30 PM	1	0	1	2	1	4	0	5	0	0	2	2	**2**	3	**3**	**8**	17
01:45 PM	0	**4**	1	5	1	4	1	**6**	0	1	**5**	**6**	0	**6**	1	7	**24**
Total Volume	2	9	4	15	3	15	2	20	0	4	11	15	2	14	5	21	71
% App. Total	13.3	60	26.7		15	75	10		0	26.7	73.3		9.5	66.7	23.8		
PHF	.500	.563	1.00	.750	.750	.938	.500	.833	.000	.500	.550	.625	.250	.583	.417	.656	.740

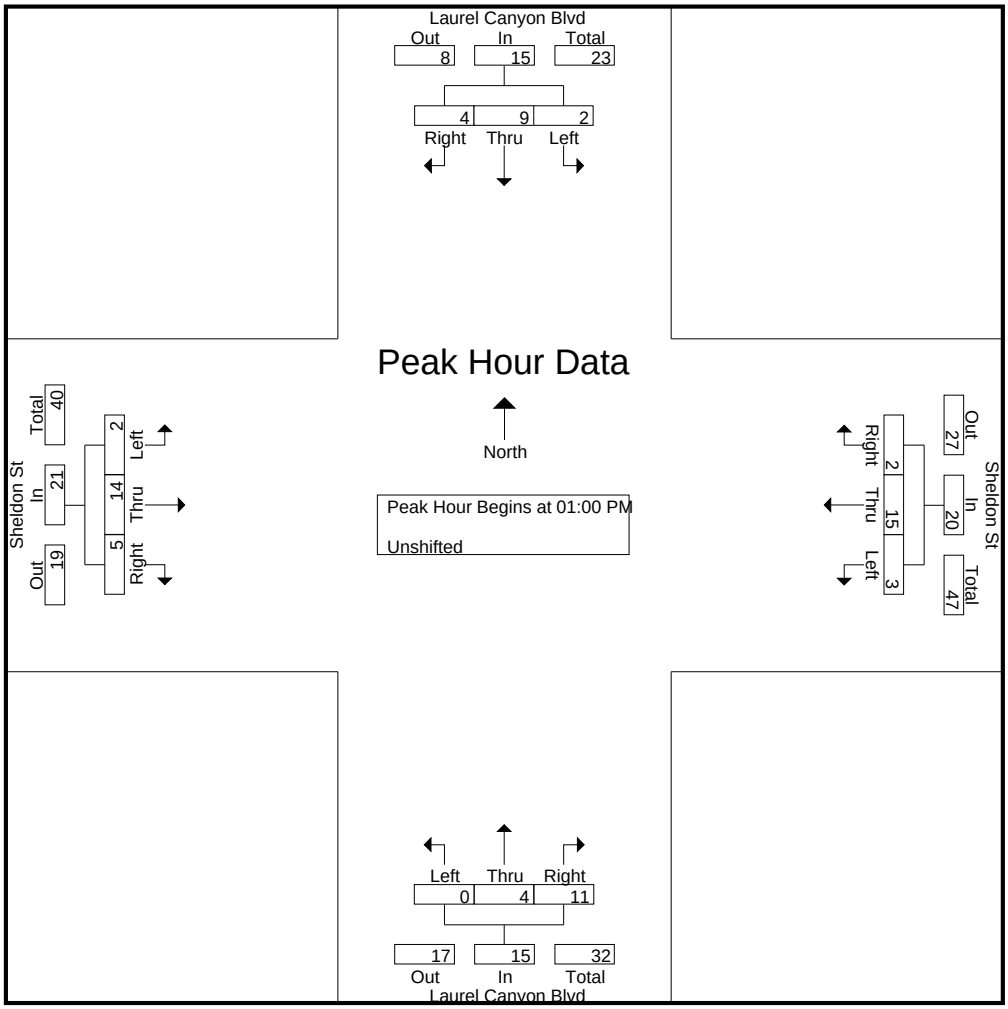

CITY TRAFFIC COUNTERS

626.991.7522

www.ctcounters.com

File Name : LCSheldon_2Axle
Site Code : 00000000
Start Date : 1/15/2014
Page No : 4

	Laurel Canyon Blvd Southbound				Sheldon St Westbound				Laurel Canyon Blvd Northbound				Sheldon St Eastbound				
Start Time	Left	Thru	Right	App. Total	Left	Thru	Right	App. Total	Left	Thru	Right	App. Total	Left	Thru	Right	App. Total	Int. Total
Peak Hour Analysis From 02:00 PM to 05:45 PM - Peak 1 of 1																	
Peak Hour for Entire Intersection Begins at 03:00 PM																	
03:00 PM	0	3	0	3	1	3	**1**	5	0	**4**	2	6	0	**6**	0	**6**	20
03:15 PM	3	**4**	0	**7**	**2**	4	1	**7**	0	4	**8**	**12**	0	1	**2**	3	**29**
03:30 PM	2	3	0	5	2	**5**	0	7	0	1	5	6	**2**	4	0	6	24
03:45 PM	**4**	0	0	4	1	2	0	3	0	2	4	6	1	5	0	6	19
Total Volume	9	10	0	19	6	14	2	22	0	11	19	30	3	16	2	21	92
% App. Total	47.4	52.6	0		27.3	63.6	9.1		0	36.7	63.3		14.3	76.2	9.5		
PHF	.563	.625	.000	.679	.750	.700	.500	.786	.000	.688	.594	.625	.375	.667	.250	.875	.793

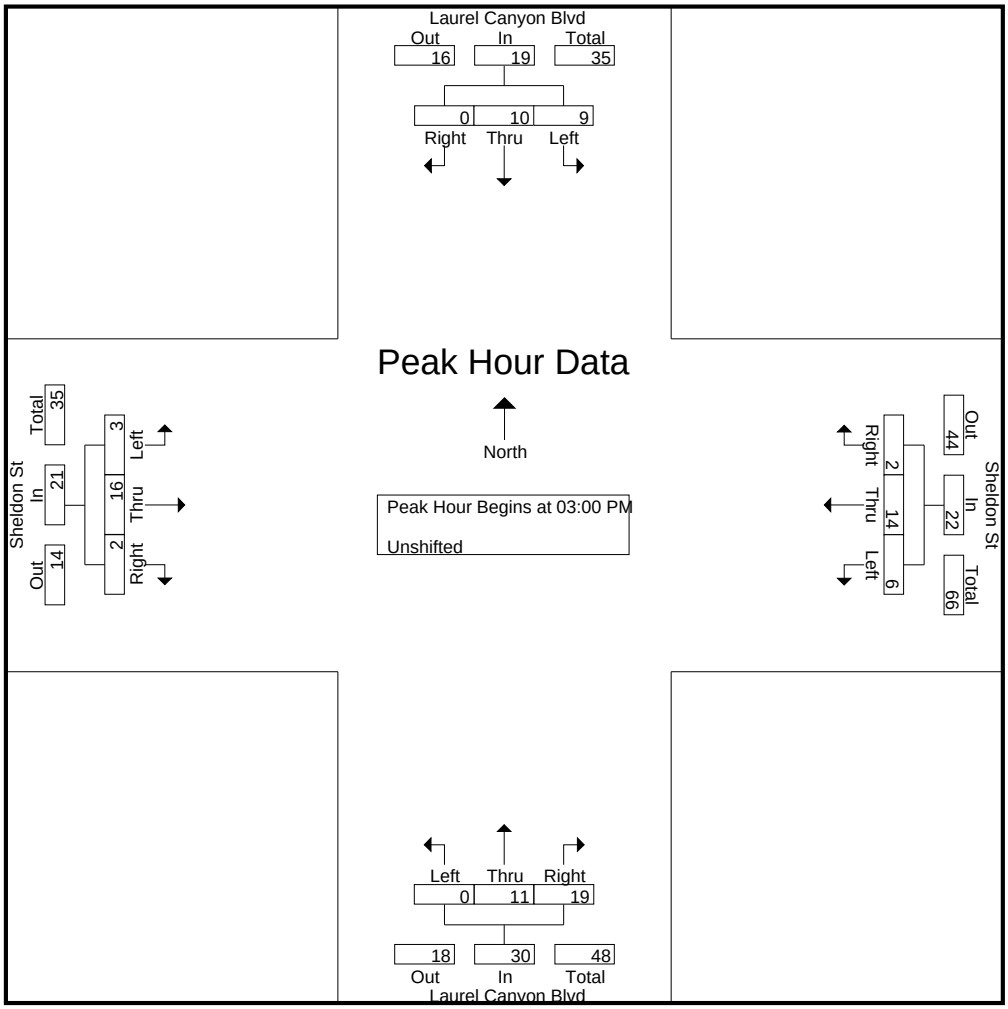

CITY TRAFFIC COUNTERS

626.991.7522

www.ctcounters.com

File Name : LCSheldon_3Axle
Site Code : 00000000
Start Date : 1/15/2014
Page No : 1

Groups Printed- Bank 2

	Laurel Canyon Blvd Southbound			Sheldon St Westbound			Laurel Canyon Blvd Northbound			Sheldon St Eastbound			
Start Time	Left	Thru	Right	Left	Thru	Right	Left	Thru	Right	Left	Thru	Right	Int. Total
07:00 AM	0	0	1	1	4	0	0	1	0	0	0	0	7
07:15 AM	0	1	1	0	2	0	1	0	0	0	1	0	6
07:30 AM	1	2	0	0	0	0	0	0	1	0	3	2	9
07:45 AM	1	2	1	0	1	0	0	1	1	0	0	0	7
Total	2	5	3	1	7	0	1	2	2	0	4	2	29
08:00 AM	0	1	0	0	3	1	0	0	2	0	3	0	10
08:15 AM	0	1	1	0	1	0	0	1	1	1	3	0	9
08:30 AM	0	1	0	1	0	1	0	0	1	1	4	0	9
08:45 AM	1	1	1	0	3	0	0	0	0	0	1	0	7
Total	1	4	2	1	7	2	0	1	4	2	11	0	35
09:00 AM	0	3	2	0	5	0	0	0	1	0	4	0	15
09:15 AM	1	1	2	0	2	0	0	0	2	0	3	0	11
09:30 AM	0	1	1	1	4	1	0	0	0	0	2	0	10
09:45 AM	0	0	1	0	3	0	0	0	1	0	3	0	8
Total	1	5	6	1	14	1	0	0	4	0	12	0	44
12:00 PM	0	0	0	0	1	1	0	0	3	1	1	1	8
12:15 PM	0	0	0	0	2	1	0	0	1	0	2	1	7
12:30 PM	0	0	2	0	2	0	0	0	1	0	1	0	6
12:45 PM	0	0	0	0	0	0	0	0	1	0	2	0	3
Total	0	0	2	0	5	2	0	0	6	1	6	2	24
01:00 PM	1	1	0	0	1	0	0	1	1	0	0	0	5
01:15 PM	0	2	0	0	2	0	0	1	2	0	4	0	11
01:30 PM	0	1	1	0	0	1	0	0	1	0	4	1	9
01:45 PM	0	1	0	0	0	0	0	0	1	0	4	0	6
Total	1	5	1	0	3	1	0	2	5	0	12	1	31
03:00 PM	0	0	0	0	1	0	0	0	1	1	3	0	6
03:15 PM	1	0	0	0	0	0	0	1	1	0	2	0	5
03:30 PM	1	0	0	0	1	0	0	0	0	1	1	0	4
03:45 PM	1	0	1	0	0	0	0	0	0	0	2	0	4
Total	3	0	1	0	2	0	0	1	2	2	8	0	19
04:00 PM	0	0	1	0	0	0	0	0	1	0	3	0	5
04:15 PM	0	0	0	0	1	0	0	1	3	0	1	0	6
04:30 PM	0	0	0	0	0	0	0	0	2	0	0	1	3
04:45 PM	0	0	0	0	0	0	0	0	3	0	0	0	3
Total	0	0	1	0	1	0	0	1	9	0	4	1	17
05:00 PM	2	0	0	0	0	0	0	0	3	0	1	0	6
05:15 PM	0	0	0	0	0	0	0	1	2	1	1	0	5
05:30 PM	0	0	0	0	0	0	0	0	2	0	0	0	2
05:45 PM	0	0	1	0	0	0	0	2	1	0	1	0	5
Total	2	0	1	0	0	0	0	3	8	1	3	0	18
Grand Total	10	19	17	3	39	6	1	10	40	6	60	6	217
Apprch %	21.7	41.3	37	6.2	81.2	12.5	2	19.6	78.4	8.3	83.3	8.3	
Total %	4.6	8.8	7.8	1.4	18	2.8	0.5	4.6	18.4	2.8	27.6	2.8	

CITY TRAFFIC COUNTERS

626.991.7522

www.ctcounters.com

File Name : LCSheldon_3Axle
Site Code : 00000000
Start Date : 1/15/2014
Page No : 2

	Laurel Canyon Blvd Southbound				Sheldon St Westbound				Laurel Canyon Blvd Northbound				Sheldon St Eastbound				
Start Time	Left	Thru	Right	App. Total	Left	Thru	Right	App. Total	Left	Thru	Right	App. Total	Left	Thru	Right	App. Total	Int. Total
Peak Hour Analysis From 07:00 AM to 09:45 AM - Peak 1 of 1																	
Peak Hour for Entire Intersection Begins at 09:00 AM																	
09:00 AM	0	**3**	**2**	**5**	0	**5**	0	5	0	0	1	1	0	**4**	0	**4**	**15**
09:15 AM	**1**	1	2	4	0	2	0	2	0	0	**2**	**2**	0	3	0	3	11
09:30 AM	0	1	1	2	**1**	4	**1**	**6**	0	0	0	0	0	2	0	2	10
09:45 AM	0	0	1	1	0	3	0	3	0	0	1	1	0	3	0	3	8
Total Volume	1	5	6	12	1	14	1	16	0	0	4	4	0	12	0	12	44
% App. Total	8.3	41.7	50		6.2	87.5	6.2		0	0	100		0	100	0		
PHF	.250	.417	.750	.600	.250	.700	.250	.667	.000	.000	.500	.500	.000	.750	.000	.750	.733

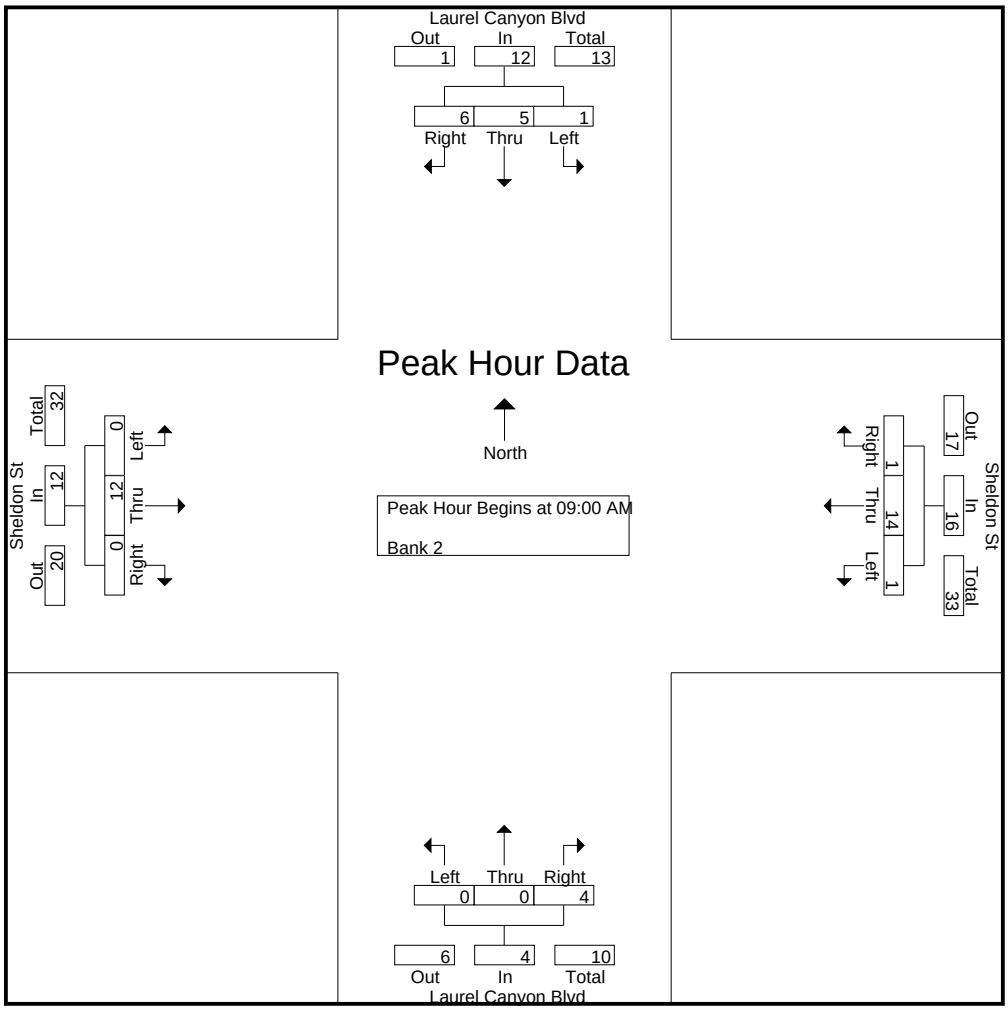

CITY TRAFFIC COUNTERS

626.991.7522

www.ctcounters.com

File Name : LCSheldon_3Axle
Site Code : 00000000
Start Date : 1/15/2014
Page No : 3

	Laurel Canyon Blvd Southbound				Sheldon St Westbound				Laurel Canyon Blvd Northbound				Sheldon St Eastbound				
Start Time	Left	Thru	Right	App. Total	Left	Thru	Right	App. Total	Left	Thru	Right	App. Total	Left	Thru	Right	App. Total	Int. Total
Peak Hour Analysis From 10:00 AM to 01:45 PM - Peak 1 of 1																	
Peak Hour for Entire Intersection Begins at 01:00 PM																	
01:00 PM	**1**	1	0	**2**	0	1	0	1	0	**1**	1	2	0	0	0	0	5
01:15 PM	0	**2**	0	2	0	**2**	0	**2**	0	1	**2**	**3**	0	**4**	0	4	**11**
01:30 PM	0	1	**1**	2	0	0	**1**	1	0	0	1	1	0	4	**1**	**5**	9
01:45 PM	0	1	0	1	0	0	0	0	0	0	1	1	0	4	0	4	6
Total Volume	1	5	1	7	0	3	1	4	0	2	5	7	0	12	1	13	31
% App. Total	14.3	71.4	14.3		0	75	25		0	28.6	71.4		0	92.3	7.7		
PHF	.250	.625	.250	.875	.000	.375	.250	.500	.000	.500	.625	.583	.000	.750	.250	.650	.705

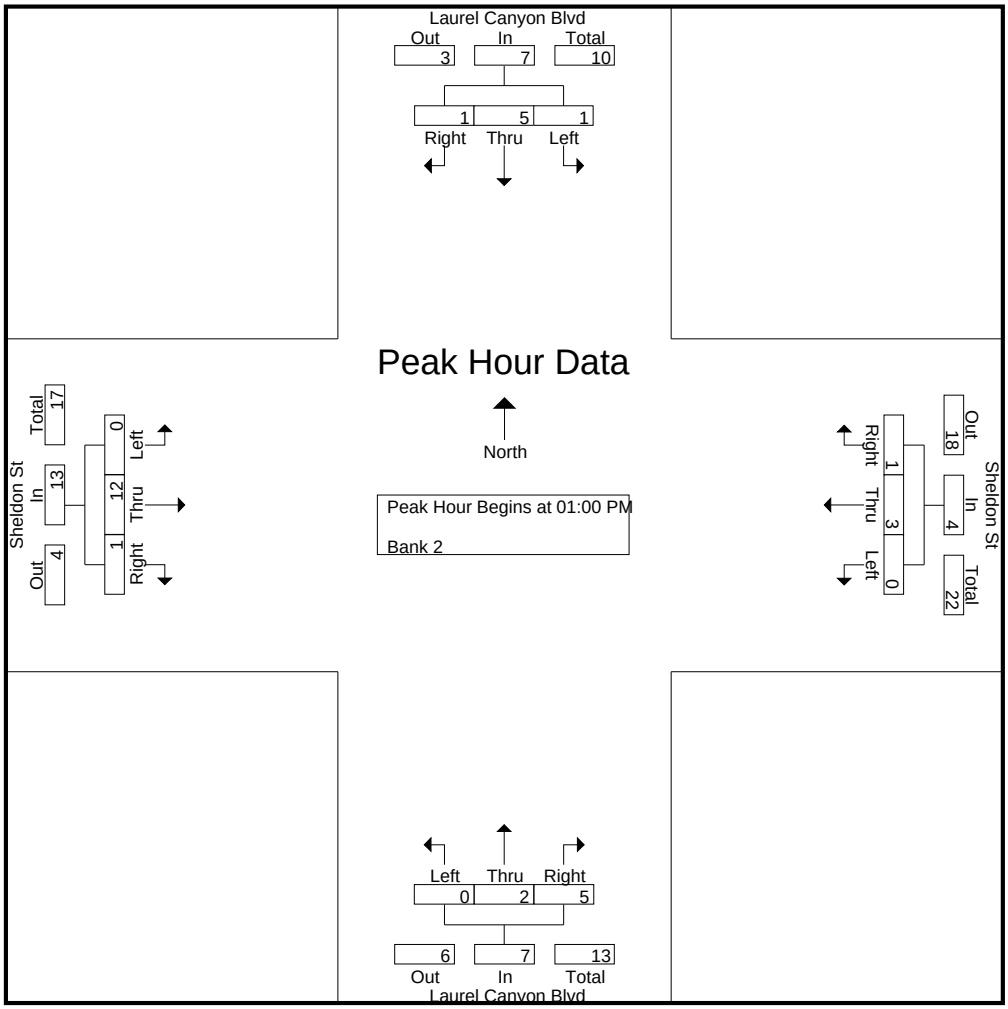

CITY TRAFFIC COUNTERS

626.991.7522

www.ctcounters.com

File Name : LCSheldon_3Axle
Site Code : 00000000
Start Date : 1/15/2014
Page No : 4

	Laurel Canyon Blvd Southbound				Sheldon St Westbound				Laurel Canyon Blvd Northbound				Sheldon St Eastbound				
Start Time	Left	Thru	Right	App. Total	Left	Thru	Right	App. Total	Left	Thru	Right	App. Total	Left	Thru	Right	App. Total	Int. Total
Peak Hour Analysis From 02:00 PM to 05:45 PM - Peak 1 of 1																	
Peak Hour for Entire Intersection Begins at 03:00 PM																	
03:00 PM	0	0	0	0	0	**1**	0	**1**	0	0	**1**	1	**1**	**3**	0	**4**	**6**
03:15 PM	**1**	0	0	1	0	0	0	0	0	**1**	1	**2**	0	2	0	2	5
03:30 PM	1	0	0	1	0	1	0	1	0	0	0	0	1	1	0	2	4
03:45 PM	1	0	**1**	**2**	0	0	0	0	0	0	0	0	0	2	0	2	4
Total Volume	3	0	1	4	0	2	0	2	0	1	2	3	2	8	0	10	19
% App. Total	75	0	25		0	100	0		0	33.3	66.7		20	80	0		
PHF	.750	.000	.250	.500	.000	.500	.000	.500	.000	.250	.500	.375	.500	.667	.000	.625	.792

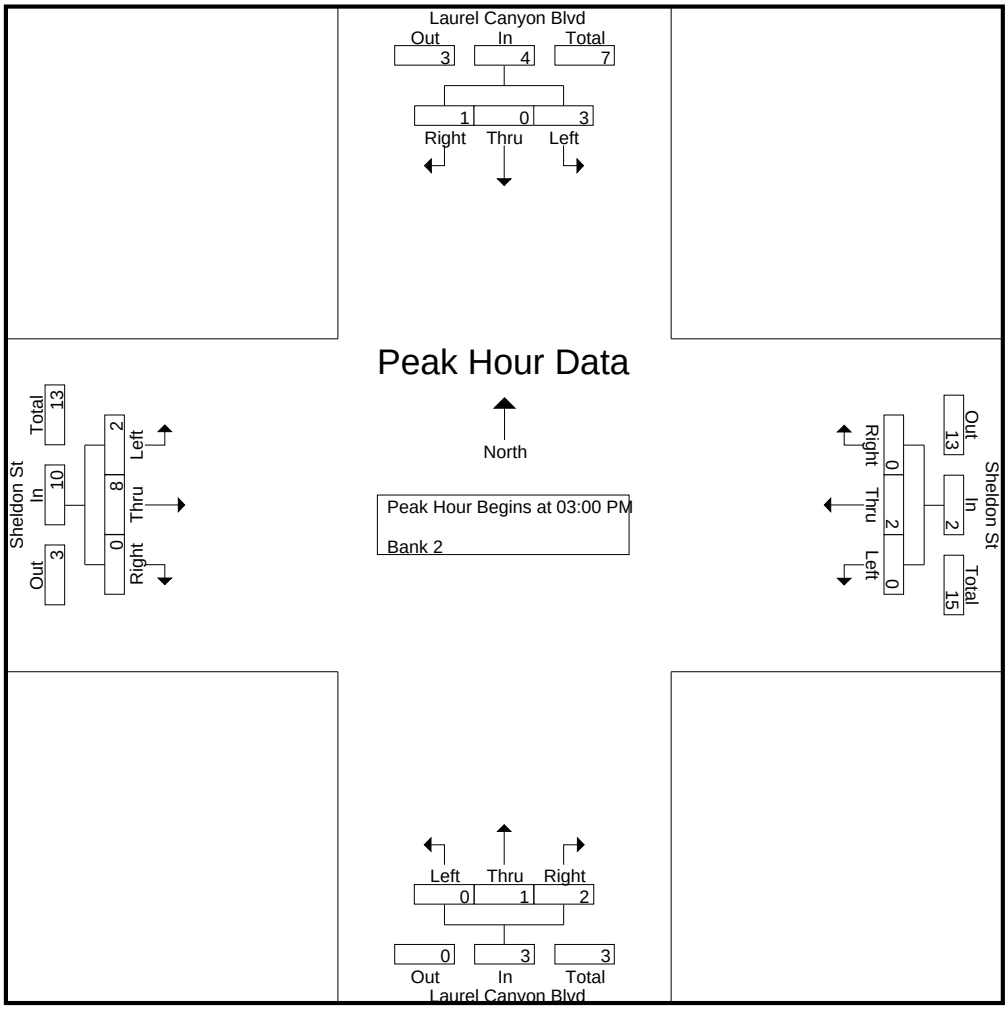

CITY TRAFFIC COUNTERS

626.991.7522

www.ctcounters.com

File Name : LCSheldon_4Axle
Site Code : 00000000
Start Date : 1/15/2014
Page No : 1

Groups Printed- Bank 2

	Laurel Canyon Blvd Southbound			Sheldon St Westbound			Laurel Canyon Blvd Northbound			Sheldon St Eastbound			
Start Time	Left	Thru	Right	Left	Thru	Right	Left	Thru	Right	Left	Thru	Right	Int. Total
07:15 AM	0	0	0	0	0	0	0	0	0	0	1	0	1
07:30 AM	0	0	0	0	0	1	0	0	0	0	0	0	1
07:45 AM	0	1	0	0	0	0	0	0	0	1	0	0	2
Total	0	1	0	0	0	1	0	0	0	1	1	0	4
08:00 AM	0	0	1	0	0	0	0	0	1	0	1	0	3
08:30 AM	0	1	0	0	0	0	0	0	0	0	0	0	1
08:45 AM	0	0	0	0	0	0	0	0	1	0	0	0	1
Total	0	1	1	0	0	0	0	0	2	0	1	0	5
09:00 AM	0	1	0	0	0	0	0	0	0	0	1	0	2
09:15 AM	0	0	1	0	0	0	0	0	0	0	0	0	1
09:30 AM	0	0	1	0	0	0	0	0	0	0	0	0	1
Total	0	1	2	0	0	0	0	0	0	0	1	0	4
12:00 PM	0	1	0	0	1	0	0	0	1	0	1	0	4
12:30 PM	1	0	0	0	1	0	0	0	0	0	1	0	3
12:45 PM	1	0	0	0	0	0	0	0	1	0	1	0	3
Total	2	1	0	0	2	0	0	0	2	0	3	0	10
01:00 PM	1	0	0	0	1	0	0	0	1	0	0	0	3
01:15 PM	2	1	0	0	0	0	0	0	1	0	0	0	4
01:30 PM	0	1	0	0	0	0	0	0	1	0	0	0	2
Total	3	2	0	0	1	0	0	0	3	0	0	0	9
03:00 PM	0	1	0	0	0	0	0	0	1	0	0	0	2
03:15 PM	0	0	1	0	0	0	0	0	0	0	0	0	1
03:45 PM	1	0	0	0	0	0	0	0	0	0	0	1	2
Total	1	1	1	0	0	0	0	0	1	0	0	1	5
04:00 PM	0	0	0	0	0	0	0	0	0	0	1	0	1
04:15 PM	0	0	1	0	0	0	0	0	0	0	0	0	1
04:30 PM	0	0	0	0	0	0	0	0	0	0	1	0	1
Total	0	0	1	0	0	0	0	0	0	0	2	0	3
05:15 PM	0	0	0	0	0	0	0	0	1	0	0	0	1
05:45 PM	0	0	0	0	0	0	0	0	1	0	0	0	1
Total	0	0	0	0	0	0	0	0	2	0	0	0	2
Grand Total	6	7	5	0	3	1	0	0	10	1	8	1	42
Apprch %	33.3	38.9	27.8	0	75	25	0	0	100	10	80	10	
Total %	14.3	16.7	11.9	0	7.1	2.4	0	0	23.8	2.4	19	2.4	

CITY TRAFFIC COUNTERS

626.991.7522

www.ctcounters.com

File Name : LCSheldon_4Axle
Site Code : 00000000
Start Date : 1/15/2014
Page No : 2

	Laurel Canyon Blvd Southbound				Sheldon St Westbound				Laurel Canyon Blvd Northbound				Sheldon St Eastbound				
Start Time	Left	Thru	Right	App. Total	Left	Thru	Right	App. Total	Left	Thru	Right	App. Total	Left	Thru	Right	App. Total	Int. Total
Peak Hour Analysis From 07:00 AM to 09:45 AM - Peak 1 of 1																	
Peak Hour for Entire Intersection Begins at 07:15 AM																	
07:15 AM	0	0	0	0	0	0	0	0	0	0	0	0	0	**1**	0	**1**	1
07:30 AM	0	0	0	0	0	0	**1**	**1**	0	0	0	0	0	0	0	0	1
07:45 AM	0	**1**	0	**1**	0	0	0	0	0	0	0	0	**1**	0	0	1	2
08:00 AM	0	0	**1**	1	0	0	0	0	0	0	**1**	**1**	0	1	0	1	**3**
Total Volume	0	1	1	2	0	0	1	1	0	0	1	1	1	2	0	3	7
% App. Total	0	50	50		0	0	100		0	0	100		33.3	66.7	0		
PHF	.000	.250	.250	.500	.000	.000	.250	.250	.000	.000	.250	.250	.250	.500	.000	.750	.583

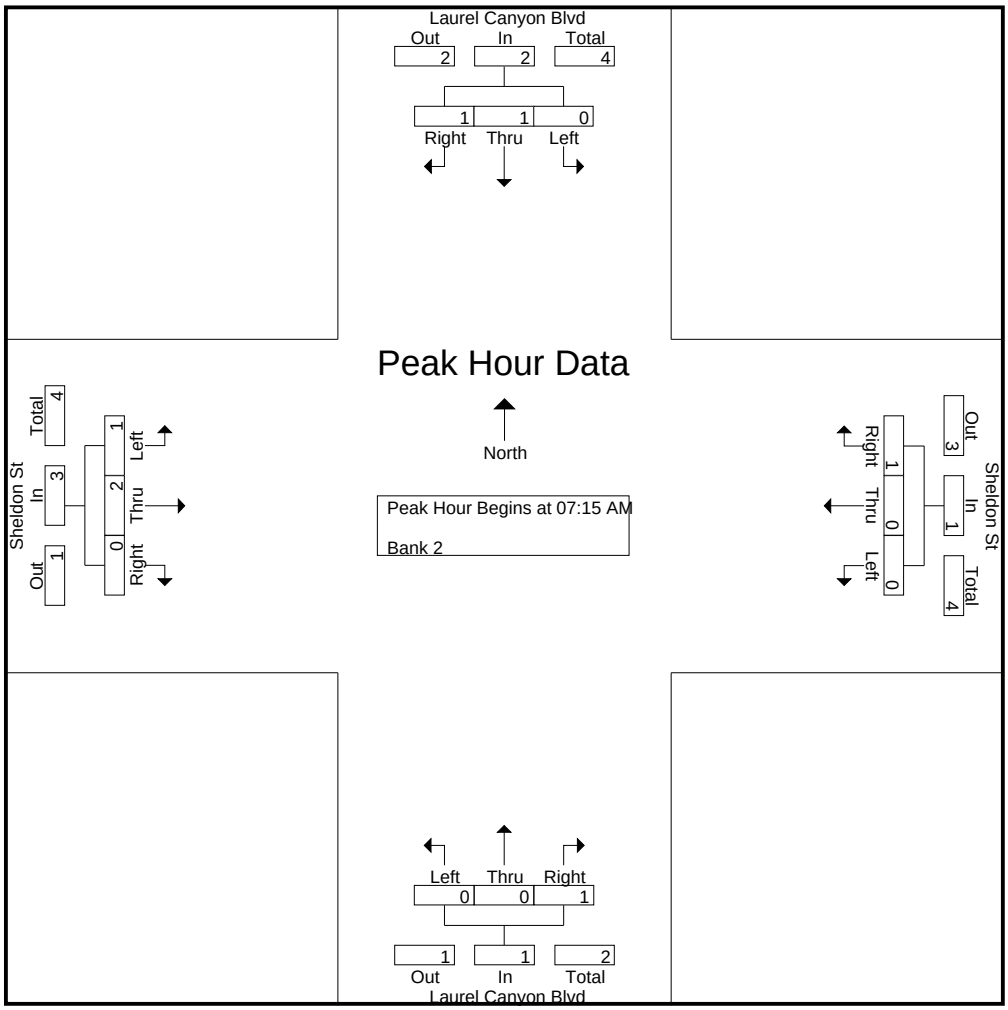

CITY TRAFFIC COUNTERS

626.991.7522

www.ctcounters.com

File Name : LCSheldon_4Axle
Site Code : 00000000
Start Date : 1/15/2014
Page No : 3

	Laurel Canyon Blvd Southbound				Sheldon St Westbound				Laurel Canyon Blvd Northbound				Sheldon St Eastbound				
Start Time	Left	Thru	Right	App. Total	Left	Thru	Right	App. Total	Left	Thru	Right	App. Total	Left	Thru	Right	App. Total	Int. Total
Peak Hour Analysis From 10:00 AM to 01:45 PM - Peak 1 of 1																	
Peak Hour for Entire Intersection Begins at 12:30 PM																	
12:30 PM	1	0	0	1	0	**1**	0	**1**	0	0	0	0	0	**1**	0	**1**	3
12:45 PM	1	0	0	1	0	0	0	0	0	0	**1**	**1**	0	1	0	1	3
01:00 PM	1	0	0	1	0	1	0	1	0	0	1	1	0	0	0	0	3
01:15 PM	**2**	**1**	0	**3**	0	0	0	0	0	0	1	1	0	0	0	0	**4**
Total Volume	5	1	0	6	0	2	0	2	0	0	3	3	0	2	0	2	13
% App. Total	83.3	16.7	0		0	100	0		0	0	100		0	100	0		
PHF	.625	.250	.000	.500	.000	.500	.000	.500	.000	.000	.750	.750	.000	.500	.000	.500	.813

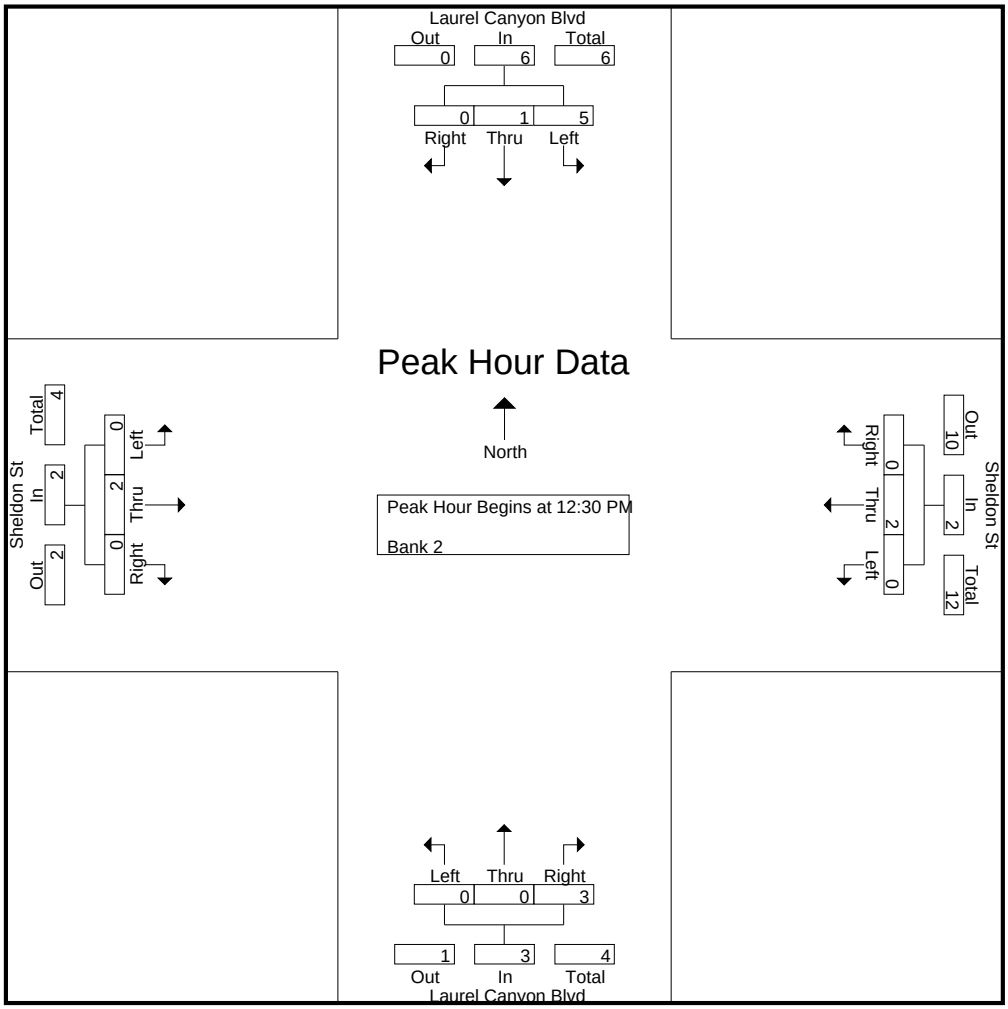

CITY TRAFFIC COUNTERS

626.991.7522

www.ctcounters.com

File Name : LCSheldon_4Axle
Site Code : 00000000
Start Date : 1/15/2014
Page No : 4

	Laurel Canyon Blvd Southbound				Sheldon St Westbound				Laurel Canyon Blvd Northbound				Sheldon St Eastbound				
Start Time	Left	Thru	Right	App. Total	Left	Thru	Right	App. Total	Left	Thru	Right	App. Total	Left	Thru	Right	App. Total	Int. Total
Peak Hour Analysis From 02:00 PM to 05:45 PM - Peak 1 of 1																	
Peak Hour for Entire Intersection Begins at 03:00 PM																	
03:00 PM	0	**1**	0	**1**	0	0	0	0	0	0	**1**	**1**	0	0	0	0	**2**
03:15 PM	0	0	**1**	1	0	0	0	0	0	0	0	0	0	0	0	0	1
03:30 PM	0	0	0	0	0	0	0	0	0	0	0	0	0	0	0	0	0
03:45 PM	**1**	0	0	1	0	0	0	0	0	0	0	0	0	0	**1**	**1**	2
Total Volume	1	1	1	3	0	0	0	0	0	0	1	1	0	0	1	1	5
% App. Total	33.3	33.3	33.3		0	0	0		0	0	100		0	0	100		
PHF	.250	.250	.250	.750	.000	.000	.000	.000	.000	.000	.250	.250	.000	.000	.250	.250	.625

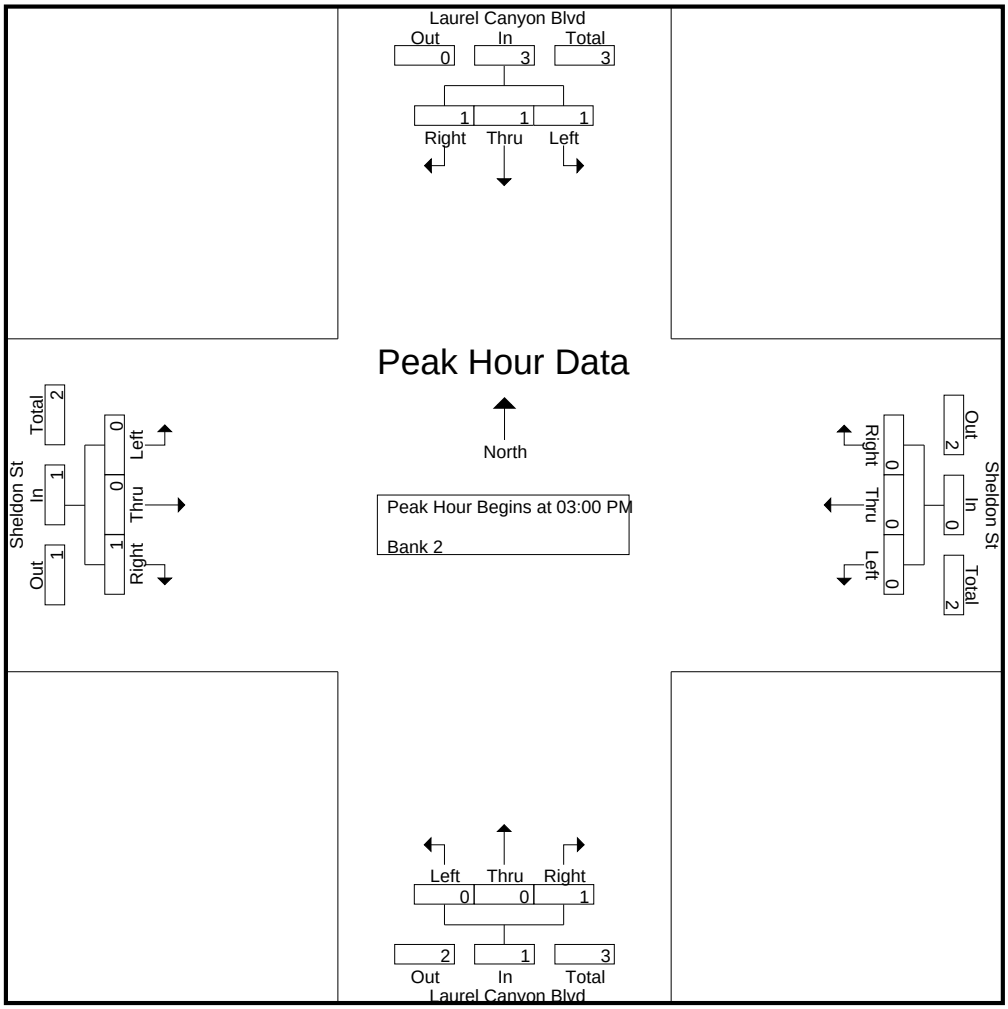

CITY TRAFFIC COUNTERS

626.991.7522

www.ctcounters.com

File Name : LCSheldon_5Axle
Site Code : 00000000
Start Date : 1/15/2014
Page No : 1

Groups Printed- Bank 1

	Laurel Canyon Blvd Southbound			Sheldon St Westbound			Laurel Canyon Blvd Northbound			Sheldon St Eastbound			
Start Time	Left	Thru	Right	Left	Thru	Right	Left	Thru	Right	Left	Thru	Right	Int. Total
07:00 AM	0	1	0	0	2	0	1	0	2	1	3	0	10
07:15 AM	2	0	5	0	1	0	2	0	0	0	0	0	10
07:30 AM	1	1	0	0	0	0	0	0	0	6	0	0	8
07:45 AM	0	4	2	1	0	0	0	0	0	2	1	0	10
Total	3	6	7	1	3	0	3	0	2	9	4	0	38
08:00 AM	1	0	2	1	0	0	0	0	1	0	3	2	10
08:15 AM	0	5	1	1	0	0	0	0	1	0	1	0	9
08:30 AM	1	1	0	1	1	0	0	0	0	0	1	0	5
08:45 AM	0	0	0	0	0	0	0	0	0	0	1	0	1
Total	2	6	3	3	1	0	0	0	2	0	6	2	25
09:00 AM	0	1	0	2	0	0	0	1	1	0	1	1	7
09:15 AM	0	1	0	1	2	0	0	0	0	0	1	0	5
09:30 AM	0	0	0	0	1	0	0	0	3	0	1	0	5
09:45 AM	0	0	0	1	4	0	0	1	1	0	1	1	9
Total	0	2	0	4	7	0	0	2	5	0	4	2	26
12:00 PM	0	1	1	1	2	0	0	0	2	0	0	0	7
12:15 PM	1	0	0	0	0	0	0	0	1	0	2	1	5
12:30 PM	0	0	0	0	1	0	0	1	2	0	2	1	7
12:45 PM	0	0	0	0	2	0	0	0	0	0	2	0	4
Total	1	1	1	1	5	0	0	1	5	0	6	2	23
01:00 PM	0	1	0	0	0	0	0	0	1	0	1	0	3
01:15 PM	1	2	0	0	0	0	0	0	0	0	1	0	4
01:30 PM	0	1	0	0	0	0	0	0	0	1	1	1	4
01:45 PM	0	1	0	3	0	0	0	1	2	0	1	0	8
Total	1	5	0	3	0	0	0	1	3	1	4	1	19
03:00 PM	0	1	0	1	0	0	0	0	1	0	1	0	4
03:15 PM	2	0	0	1	0	0	0	0	0	0	0	0	3
03:30 PM	0	0	0	0	0	1	0	1	0	0	1	0	3
03:45 PM	1	0	0	0	0	0	0	0	0	0	0	0	1
Total	3	1	0	2	0	1	0	1	1	0	2	0	11
04:00 PM	0	0	0	0	0	0	0	0	1	0	0	0	1
04:30 PM	1	0	0	0	0	0	0	0	0	0	0	0	1
Total	1	0	0	0	0	0	0	0	1	0	0	0	2
05:00 PM	0	1	0	0	0	0	0	0	0	0	0	1	2
05:30 PM	0	0	0	0	0	0	0	1	1	0	0	0	2
05:45 PM	0	1	0	0	0	0	0	0	0	0	1	0	2
Total	0	2	0	0	0	0	0	1	1	0	1	1	6
Grand Total	11	23	11	14	16	1	3	6	20	10	27	8	150
Apprch %	24.4	51.1	24.4	45.2	51.6	3.2	10.3	20.7	69	22.2	60	17.8	
Total %	7.3	15.3	7.3	9.3	10.7	0.7	2	4	13.3	6.7	18	5.3	

CITY TRAFFIC COUNTERS

626.991.7522

www.ctcounters.com

File Name : LCSheldon_5Axle
Site Code : 00000000
Start Date : 1/15/2014
Page No : 2

	Laurel Canyon Blvd Southbound				Sheldon St Westbound				Laurel Canyon Blvd Northbound				Sheldon St Eastbound				
Start Time	Left	Thru	Right	App. Total	Left	Thru	Right	App. Total	Left	Thru	Right	App. Total	Left	Thru	Right	App. Total	Int. Total
Peak Hour Analysis From 07:00 AM to 09:45 AM - Peak 1 of 1																	
Peak Hour for Entire Intersection Begins at 07:00 AM																	
07:00 AM	0	1	0	1	0	**2**	0	**2**	1	0	**2**	**3**	1	**3**	0	4	**10**
07:15 AM	**2**	0	**5**	**7**	0	1	0	1	**2**	0	0	2	0	0	0	0	10
07:30 AM	1	1	0	2	0	0	0	0	0	0	0	0	**6**	0	0	**6**	8
07:45 AM	0	**4**	2	6	**1**	0	0	1	0	0	0	0	2	1	0	3	10
Total Volume	3	6	7	16	1	3	0	4	3	0	2	5	9	4	0	13	38
% App. Total	18.8	37.5	43.8		25	75	0		60	0	40		69.2	30.8	0		
PHF	.375	.375	.350	.571	.250	.375	.000	.500	.375	.000	.250	.417	.375	.333	.000	.542	.950

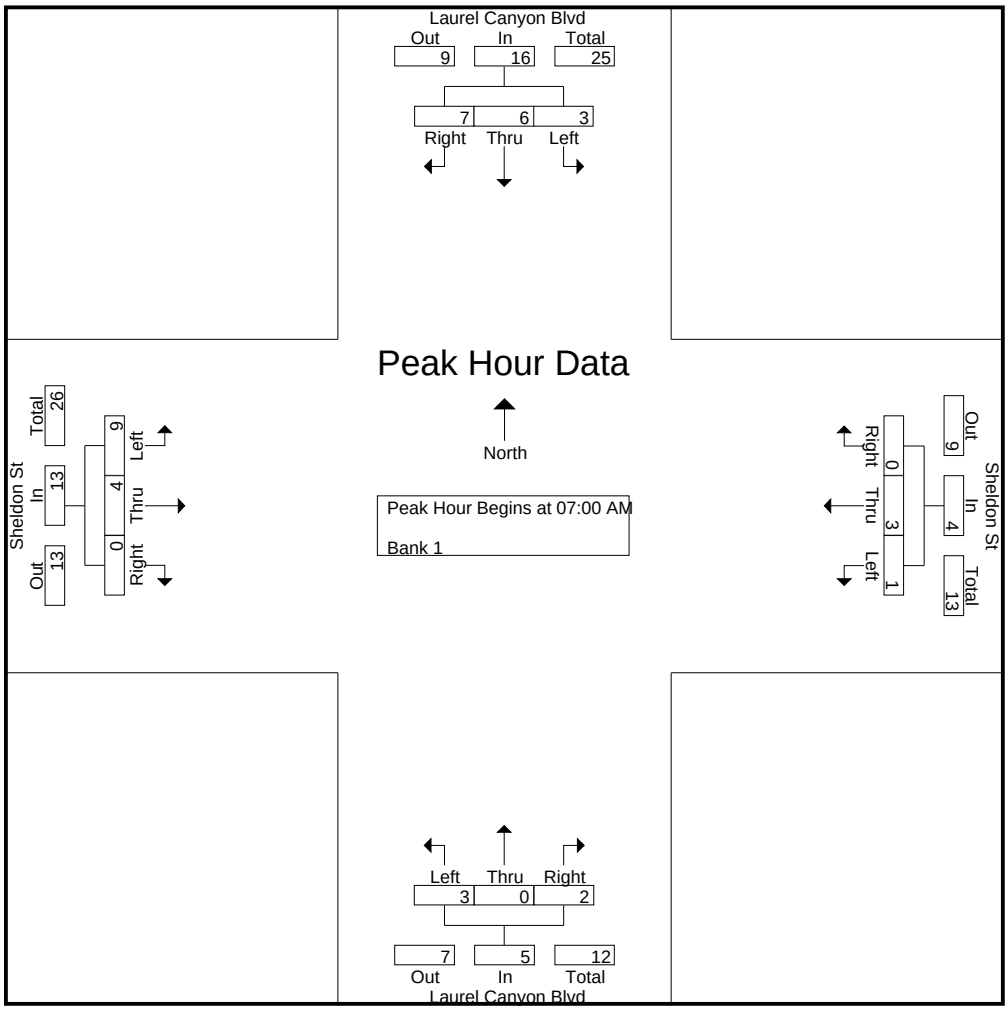

CITY TRAFFIC COUNTERS

626.991.7522

www.ctcounters.com

File Name : LCSheldon_5Axle
Site Code : 00000000
Start Date : 1/15/2014
Page No : 3

	Laurel Canyon Blvd Southbound				Sheldon St Westbound				Laurel Canyon Blvd Northbound				Sheldon St Eastbound				
Start Time	Left	Thru	Right	App. Total	Left	Thru	Right	App. Total	Left	Thru	Right	App. Total	Left	Thru	Right	App. Total	Int. Total
Peak Hour Analysis From 10:00 AM to 01:45 PM - Peak 1 of 1																	
Peak Hour for Entire Intersection Begins at 12:00 PM																	
12:00 PM	0	**1**	**1**	**2**	**1**	**2**	0	**3**	0	0	**2**	2	0	0	0	0	**7**
12:15 PM	**1**	0	0	1	0	0	0	0	0	0	1	1	0	**2**	**1**	**3**	5
12:30 PM	0	0	0	0	0	1	0	1	0	**1**	2	**3**	0	2	1	3	7
12:45 PM	0	0	0	0	0	2	0	2	0	0	0	0	0	2	0	2	4
Total Volume	1	1	1	3	1	5	0	6	0	1	5	6	0	6	2	8	23
% App. Total	33.3	33.3	33.3		16.7	83.3	0		0	16.7	83.3		0	75	25		
PHF	.250	.250	.250	.375	.250	.625	.000	.500	.000	.250	.625	.500	.000	.750	.500	.667	.821

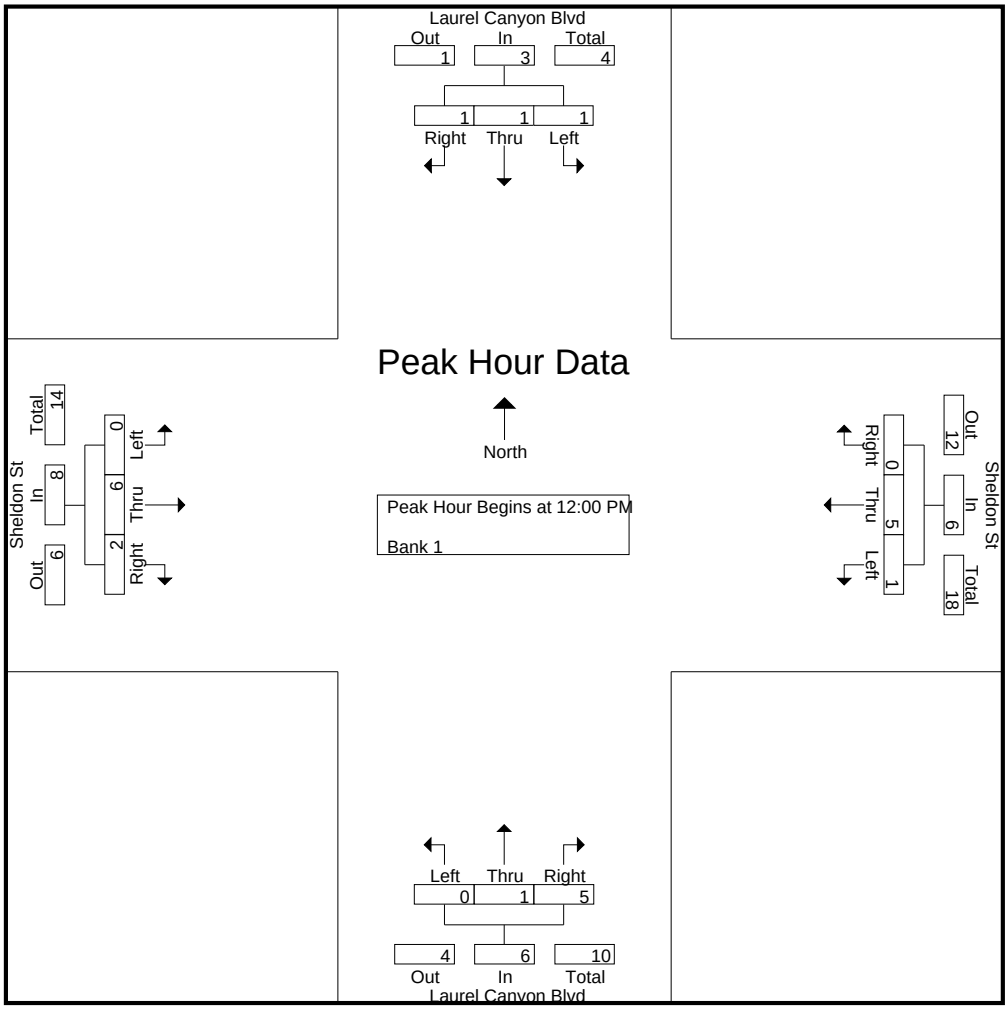

CITY TRAFFIC COUNTERS

626.991.7522

www.ctcounters.com

File Name : LCSheldon_5Axle
Site Code : 00000000
Start Date : 1/15/2014
Page No : 4

	Laurel Canyon Blvd Southbound				Sheldon St Westbound				Laurel Canyon Blvd Northbound				Sheldon St Eastbound				
Start Time	Left	Thru	Right	App. Total	Left	Thru	Right	App. Total	Left	Thru	Right	App. Total	Left	Thru	Right	App. Total	Int. Total
Peak Hour Analysis From 02:00 PM to 05:45 PM - Peak 1 of 1																	
Peak Hour for Entire Intersection Begins at 03:00 PM																	
03:00 PM	0	**1**	0	1	**1**	0	0	**1**	0	0	**1**	**1**	0	**1**	0	**1**	**4**
03:15 PM	**2**	0	0	**2**	1	0	0	1	0	0	0	0	0	0	0	0	3
03:30 PM	0	0	0	0	0	0	**1**	1	0	**1**	0	1	0	1	0	1	3
03:45 PM	1	0	0	1	0	0	0	0	0	0	0	0	0	0	0	0	1
Total Volume	3	1	0	4	2	0	1	3	0	1	1	2	0	2	0	2	11
% App. Total	75	25	0		66.7	0	33.3		0	50	50		0	100	0		
PHF	.375	.250	.000	.500	.500	.000	.250	.750	.000	.250	.250	.500	.000	.500	.000	.500	.688

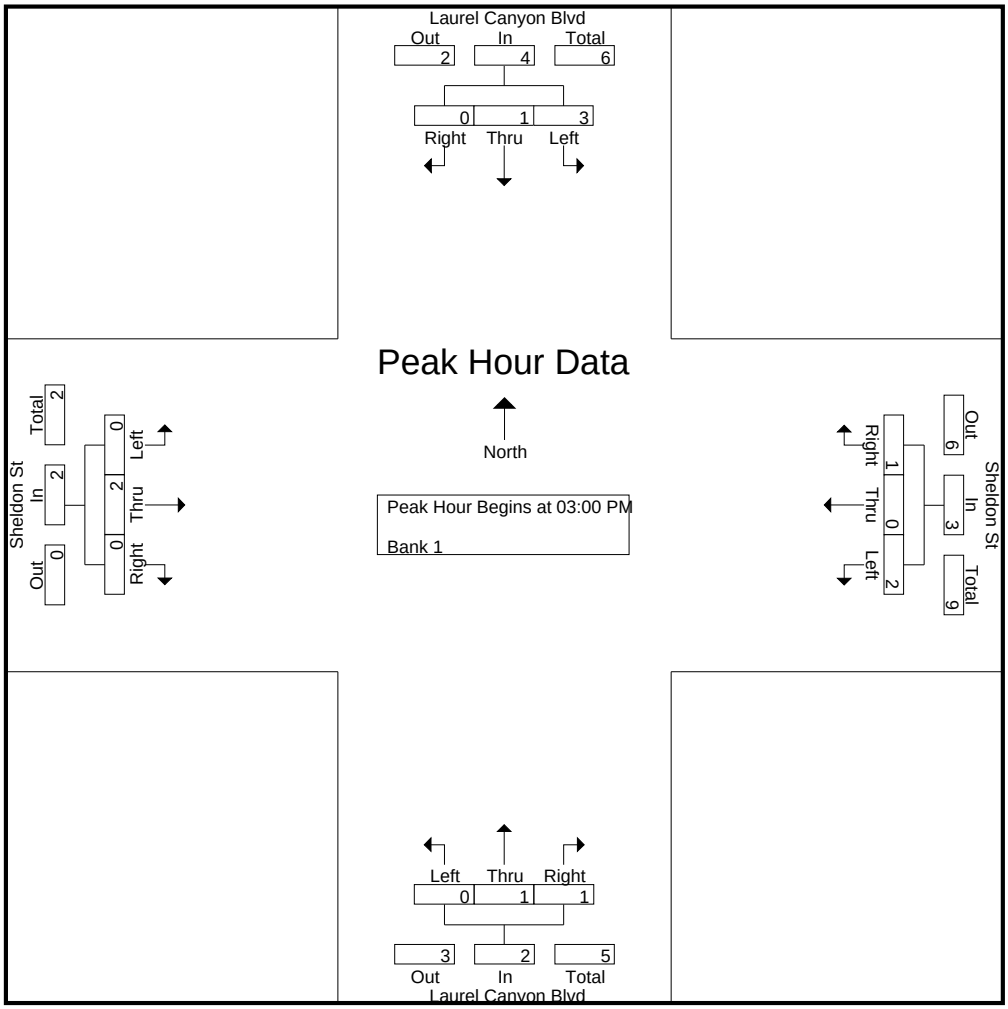

CITY TRAFFIC COUNTERS

626.991.7522

www.ctcounters.com

File Name : LC5SB
Site Code : 00000000
Start Date : 1/15/2014
Page No : 1

Groups Printed- Unshifted

	Laurel Canyon Blvd Southbound			I-5 SB Ramps Westbound			Laurel Canyon Blvd Northbound			I-5 SB Ramps Eastbound			
Start Time	Left	Thru	Right	Left	Thru	Right	Left	Thru	Right	Left	Thru	Right	Int. Total
07:00 AM	148	153	0	5	0	16	0	64	33	0	0	0	419
07:15 AM	128	157	0	5	0	18	0	113	35	0	0	0	456
07:30 AM	133	151	0	1	0	17	0	146	30	0	0	0	478
07:45 AM	111	158	0	0	0	16	0	169	36	0	0	0	490
Total	520	619	0	11	0	67	0	492	134	0	0	0	1843
08:00 AM	103	136	0	10	0	21	0	130	23	0	0	0	423
08:15 AM	112	154	0	6	0	15	0	86	12	0	0	0	385
08:30 AM	128	130	0	1	0	13	0	70	7	0	0	0	349
08:45 AM	107	121	0	7	0	11	0	86	12	0	0	0	344
Total	450	541	0	24	0	60	0	372	54	0	0	0	1501
09:00 AM	80	102	0	7	0	10	0	58	15	0	0	0	272
09:15 AM	60	85	0	11	0	13	0	61	18	0	0	0	248
09:30 AM	58	79	0	10	0	21	0	80	15	0	0	0	263
09:45 AM	48	95	0	7	0	14	0	89	12	0	0	0	265
Total	246	361	0	35	0	58	0	288	60	0	0	0	1048
12:00 PM	42	98	0	7	0	29	0	110	17	0	0	0	303
12:15 PM	50	103	0	13	0	33	0	110	15	0	0	0	324
12:30 PM	52	91	0	14	0	16	0	108	12	0	0	0	293
12:45 PM	57	96	0	15	0	18	0	110	8	0	0	0	304
Total	201	388	0	49	0	96	0	438	52	0	0	0	1224
01:00 PM	40	105	0	7	0	17	0	101	13	0	0	0	283
01:15 PM	52	79	0	9	0	11	0	103	12	0	0	0	266
01:30 PM	46	99	0	19	0	19	0	114	11	0	0	0	308
01:45 PM	51	94	0	11	0	19	0	129	3	0	0	0	307
Total	189	377	0	46	0	66	0	447	39	0	0	0	1164
03:00 PM	71	134	0	12	0	35	0	166	21	0	0	0	439
03:15 PM	66	104	0	21	0	42	0	157	25	0	0	0	415
03:30 PM	76	110	0	25	0	34	0	168	20	0	0	0	433
03:45 PM	81	121	0	18	0	45	0	189	22	0	0	0	476
Total	294	469	0	76	0	156	0	680	88	0	0	0	1763
04:00 PM	53	128	0	29	0	39	0	133	12	0	0	0	394
04:15 PM	51	119	0	12	0	26	0	225	23	0	0	0	456
04:30 PM	71	119	0	13	0	35	0	187	17	0	0	0	442
04:45 PM	78	132	0	6	0	29	0	238	17	0	0	0	500
Total	253	498	0	60	0	129	0	783	69	0	0	0	1792
05:00 PM	92	140	0	9	0	42	0	196	14	0	0	0	493
05:15 PM	97	119	0	8	0	41	0	239	8	0	0	0	512
05:30 PM	86	130	0	9	0	35	0	291	8	0	0	0	559
05:45 PM	47	117	0	9	0	31	0	193	27	0	0	0	424
Total	322	506	0	35	0	149	0	919	57	0	0	0	1988
Grand Total	2475	3759	0	336	0	781	0	4419	553	0	0	0	12323
Apprch %	39.7	60.3	0	30.1	0	69.9	0	88.9	11.1	0	0	0	
Total %	20.1	30.5	0	2.7	0	6.3	0	35.9	4.5	0	0	0	

CITY TRAFFIC COUNTERS

626.991.7522

www.ctcounters.com

File Name : LC5SB
Site Code : 00000000
Start Date : 1/15/2014
Page No : 2

	Laurel Canyon Blvd Southbound				I-5 SB Ramps Westbound				Laurel Canyon Blvd Northbound				I-5 SB Ramps Eastbound				
Start Time	Left	Thru	Right	App. Total	Left	Thru	Right	App. Total	Left	Thru	Right	App. Total	Left	Thru	Right	App. Total	Int. Total
Peak Hour Analysis From 07:00 AM to 09:45 AM - Peak 1 of 1																	
Peak Hour for Entire Intersection Begins at 07:15 AM																	
07:15 AM	128	157	0	**285**	5	0	18	23	0	113	35	148	0	0	0	0	456
07:30 AM	**133**	151	0	284	1	0	17	18	0	146	30	176	0	0	0	0	478
07:45 AM	111	**158**	0	269	0	0	16	16	0	**169**	**36**	**205**	0	0	0	0	**490**
08:00 AM	103	136	0	239	**10**	0	**21**	**31**	0	130	23	153	0	0	0	0	423
Total Volume	475	602	0	1077	16	0	72	88	0	558	124	682	0	0	0	0	1847
% App. Total	44.1	55.9	0		18.2	0	81.8		0	81.8	18.2		0	0	0		
PHF	.893	.953	.000	.945	.400	.000	.857	.710	.000	.825	.861	.832	.000	.000	.000	.000	.942

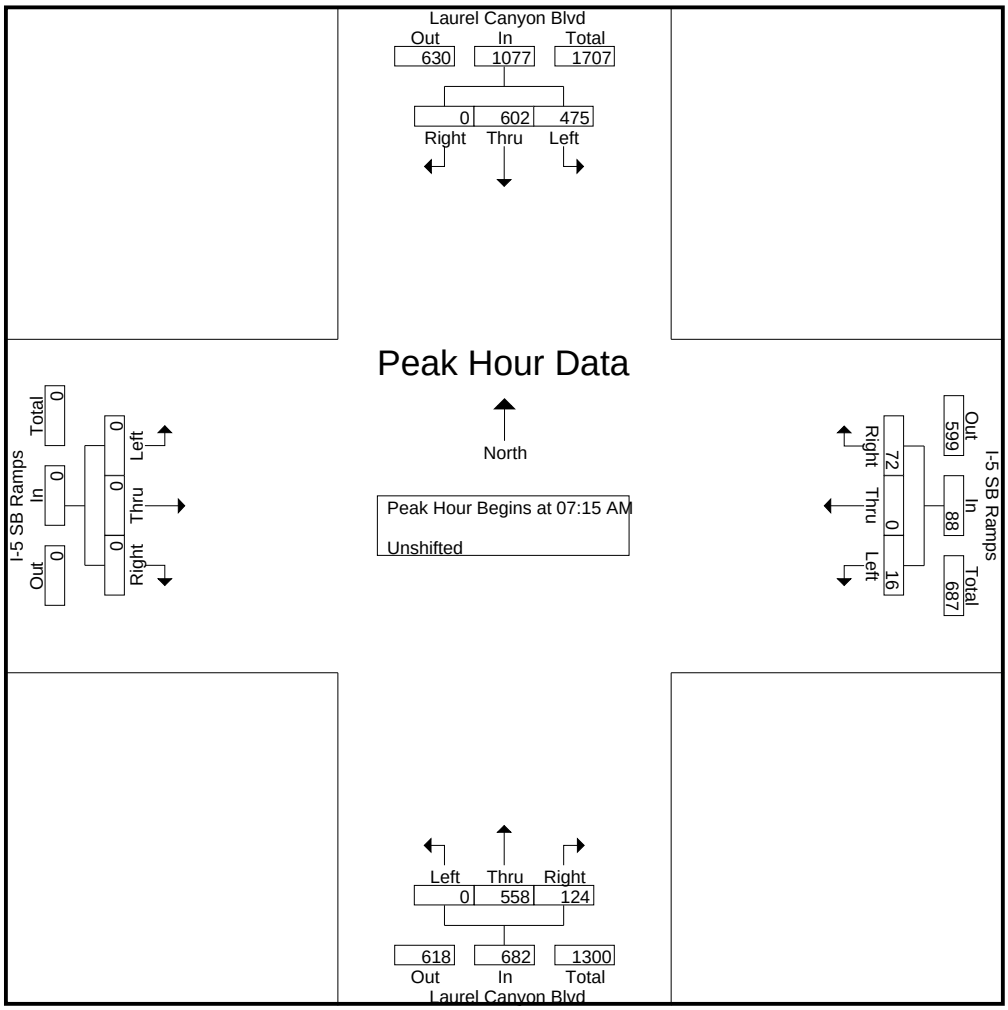

CITY TRAFFIC COUNTERS

626.991.7522

www.ctcounters.com

File Name : LC5SB
Site Code : 00000000
Start Date : 1/15/2014
Page No : 3

	Laurel Canyon Blvd Southbound				I-5 SB Ramps Westbound				Laurel Canyon Blvd Northbound				I-5 SB Ramps Eastbound				
Start Time	Left	Thru	Right	App. Total	Left	Thru	Right	App. Total	Left	Thru	Right	App. Total	Left	Thru	Right	App. Total	Int. Total
Peak Hour Analysis From 10:00 AM to 01:45 PM - Peak 1 of 1																	
Peak Hour for Entire Intersection Begins at 12:00 PM																	
12:00 PM	42	98	0	140	7	0	29	36	0	**110**	**17**	**127**	0	0	0	0	303
12:15 PM	50	**103**	0	**153**	13	0	**33**	**46**	0	110	15	125	0	0	0	0	**324**
12:30 PM	52	91	0	143	14	0	16	30	0	108	12	120	0	0	0	0	293
12:45 PM	**57**	96	0	153	**15**	0	18	33	0	110	8	118	0	0	0	0	304
Total Volume	201	388	0	589	49	0	96	145	0	438	52	490	0	0	0	0	1224
% App. Total	34.1	65.9	0		33.8	0	66.2		0	89.4	10.6		0	0	0		
PHF	.882	.942	.000	.962	.817	.000	.727	.788	.000	.995	.765	.965	.000	.000	.000	.000	.944

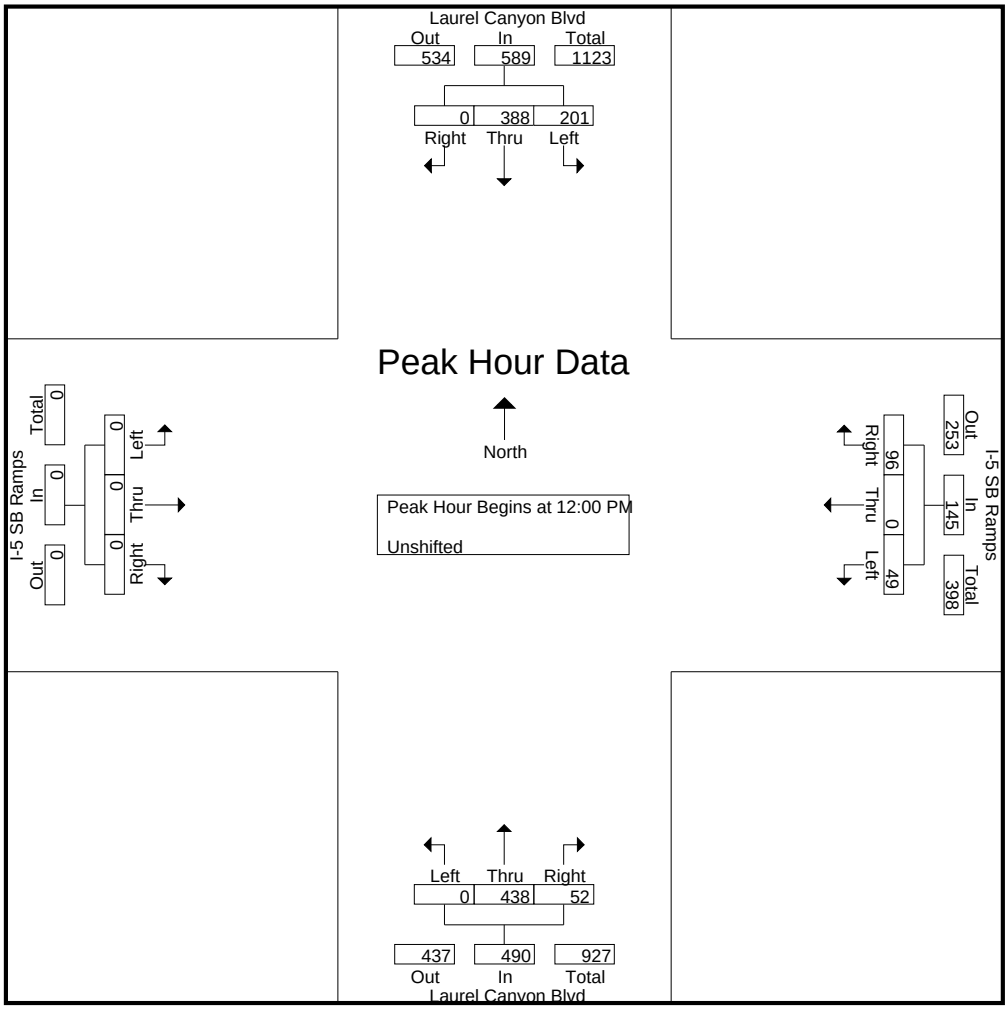

CITY TRAFFIC COUNTERS

626.991.7522

www.ctcounters.com

File Name : LC5SB
Site Code : 00000000
Start Date : 1/15/2014
Page No : 4

	Laurel Canyon Blvd Southbound				I-5 SB Ramps Westbound				Laurel Canyon Blvd Northbound				I-5 SB Ramps Eastbound				
Start Time	Left	Thru	Right	App. Total	Left	Thru	Right	App. Total	Left	Thru	Right	App. Total	Left	Thru	Right	App. Total	Int. Total
Peak Hour Analysis From 02:00 PM to 05:45 PM - Peak 1 of 1																	
Peak Hour for Entire Intersection Begins at 04:45 PM																	
04:45 PM	78	132	0	210	6	0	29	35	0	238	**17**	255	0	0	0	0	500
05:00 PM	92	**140**	0	**232**	**9**	0	**42**	**51**	0	196	14	210	0	0	0	0	493
05:15 PM	**97**	119	0	216	8	0	41	49	0	239	8	247	0	0	0	0	512
05:30 PM	86	130	0	216	9	0	35	44	0	**291**	8	**299**	0	0	0	0	**559**
Total Volume	353	521	0	874	32	0	147	179	0	964	47	1011	0	0	0	0	2064
% App. Total	40.4	59.6	0		17.9	0	82.1		0	95.4	4.6		0	0	0		
PHF	.910	.930	.000	.942	.889	.000	.875	.877	.000	.828	.691	.845	.000	.000	.000	.000	.923

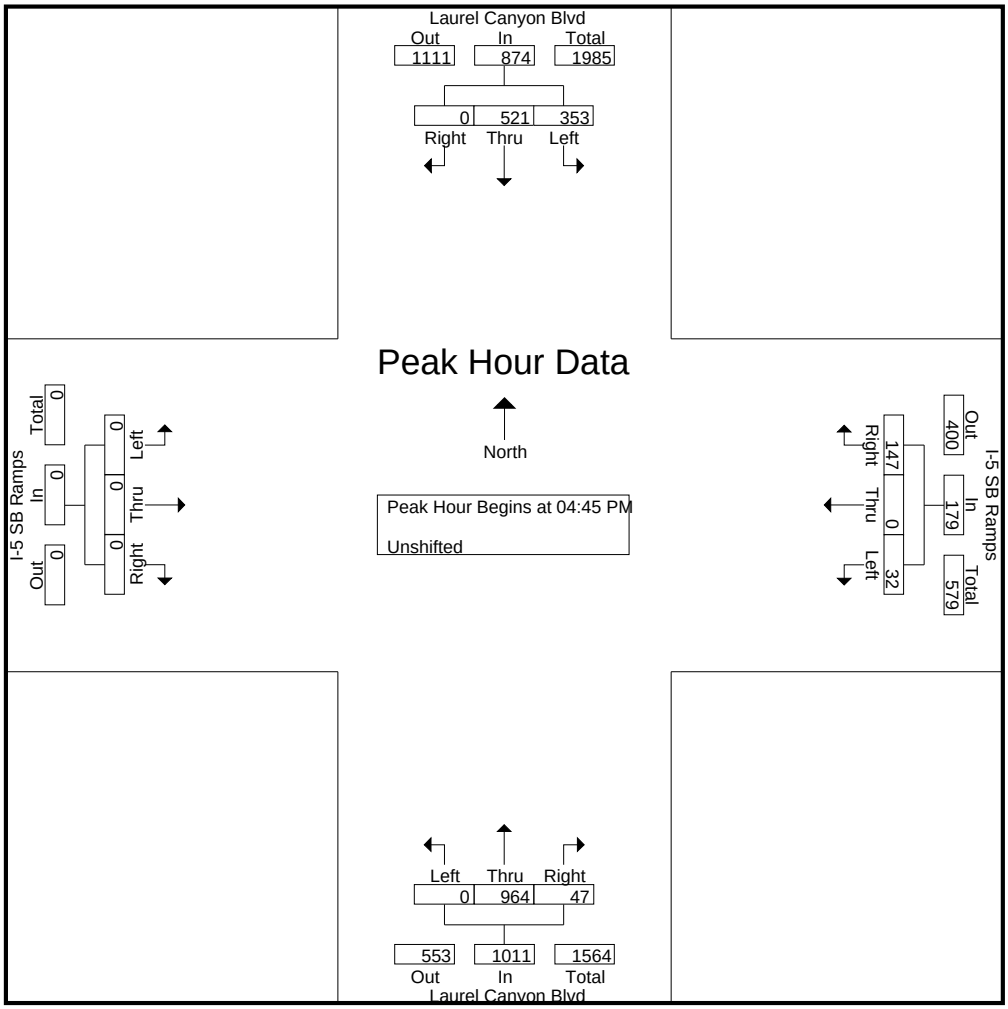

CITY TRAFFIC COUNTERS

626.991.7522

www.ctcounters.com

File Name : LC5SB_MC
Site Code : 00000000
Start Date : 1/15/2014
Page No : 1

Groups Printed- Bank 2

	Laurel Canyon Blvd Southbound			I-5 SB Ramps Westbound			Laurel Canyon Blvd Northbound			I-5 SB Ramps Eastbound			
Start Time	Left	Thru	Right	Left	Thru	Right	Left	Thru	Right	Left	Thru	Right	Int. Total
07:00 AM	0	0	0	0	0	1	0	1	0	0	0	0	2
07:30 AM	0	0	0	0	0	0	0	0	1	0	0	0	1
Total	0	0	0	0	0	1	0	1	1	0	0	0	3
08:00 AM	0	0	0	0	0	1	0	0	0	0	0	0	1
Total	0	0	0	0	0	1	0	0	0	0	0	0	1
09:45 AM	0	0	0	0	0	0	0	1	0	0	0	0	1
Total	0	0	0	0	0	0	0	1	0	0	0	0	1
12:00 PM	1	1	0	0	0	0	0	0	0	0	0	0	2
Total	1	1	0	0	0	0	0	0	0	0	0	0	2
01:30 PM	0	0	0	0	0	0	0	1	0	0	0	0	1
Total	0	0	0	0	0	0	0	1	0	0	0	0	1
04:00 PM	0	0	0	0	0	0	0	1	0	0	0	0	1
04:30 PM	0	1	0	0	0	0	0	0	0	0	0	0	1
04:45 PM	0	1	0	0	0	0	0	0	0	0	0	0	1
Total	0	2	0	0	0	0	0	1	0	0	0	0	3
05:45 PM	0	1	0	0	0	0	0	0	0	0	0	0	1
Total	0	1	0	0	0	0	0	0	0	0	0	0	1
Grand Total	1	4	0	0	0	2	0	4	1	0	0	0	12
Apprch %	20	80	0	0	0	100	0	80	20	0	0	0	
Total %	8.3	33.3	0	0	0	16.7	0	33.3	8.3	0	0	0	

CITY TRAFFIC COUNTERS

626.991.7522

www.ctcounters.com

File Name : LC5SB_MC
Site Code : 00000000
Start Date : 1/15/2014
Page No : 2

	Laurel Canyon Blvd Southbound				I-5 SB Ramps Westbound				Laurel Canyon Blvd Northbound				I-5 SB Ramps Eastbound				
Start Time	Left	Thru	Right	App. Total	Left	Thru	Right	App. Total	Left	Thru	Right	App. Total	Left	Thru	Right	App. Total	Int. Total
Peak Hour Analysis From 07:00 AM to 09:45 AM - Peak 1 of 1																	
Peak Hour for Entire Intersection Begins at 07:00 AM																	
07:00 AM	0	0	0	0	0	0	**1**	**1**	0	**1**	0	**1**	0	0	0	0	**2**
07:15 AM	0	0	0	0	0	0	0	0	0	0	0	0	0	0	0	0	0
07:30 AM	0	0	0	0	0	0	0	0	0	0	**1**	1	0	0	0	0	1
07:45 AM	0	0	0	0	0	0	0	0	0	0	0	0	0	0	0	0	0
Total Volume	0	0	0	0	0	0	1	1	0	1	1	2	0	0	0	0	3
% App. Total	0	0	0		0	0	100		0	50	50		0	0	0		
PHF	.000	.000	.000	.000	.000	.000	.250	.250	.000	.250	.250	.500	.000	.000	.000	.000	.375

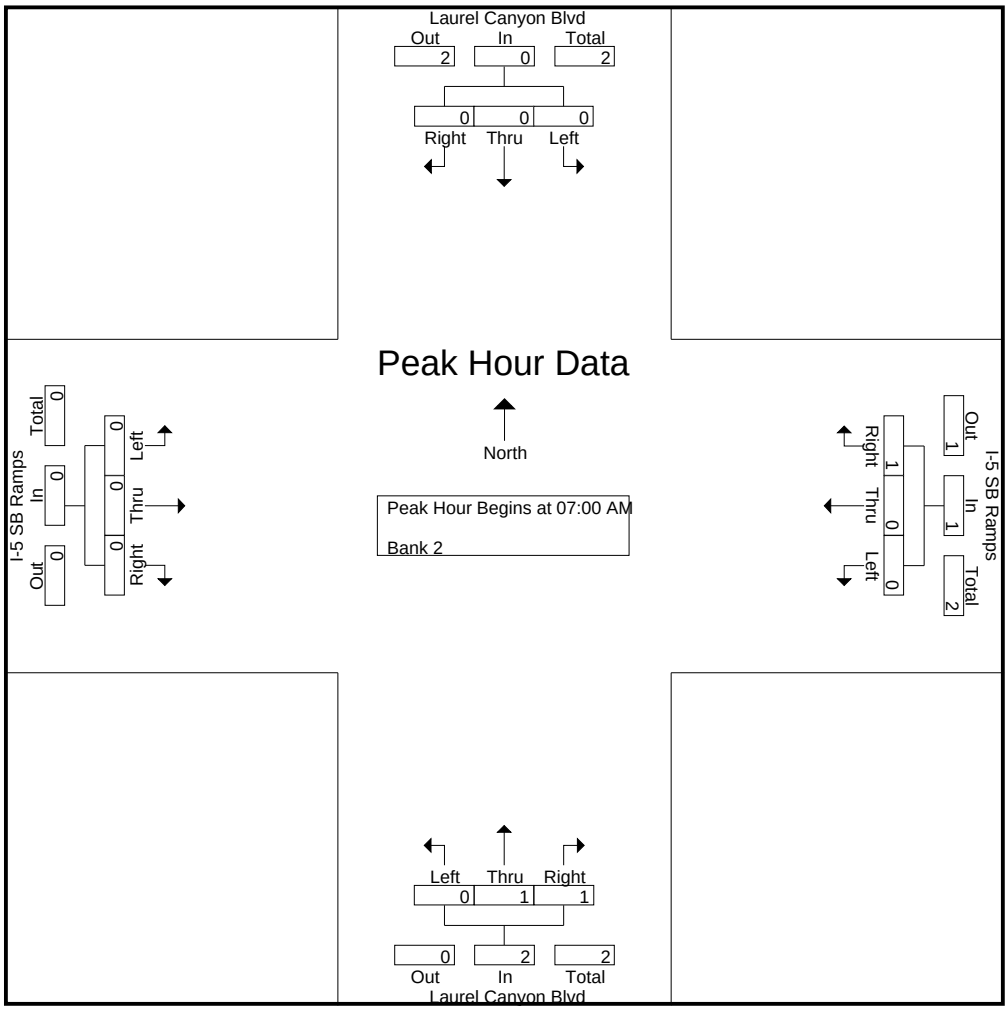

CITY TRAFFIC COUNTERS

626.991.7522

www.ctcounters.com

File Name : LC5SB_MC
Site Code : 00000000
Start Date : 1/15/2014
Page No : 3

	Laurel Canyon Blvd Southbound				I-5 SB Ramps Westbound				Laurel Canyon Blvd Northbound				I-5 SB Ramps Eastbound				
Start Time	Left	Thru	Right	App. Total	Left	Thru	Right	App. Total	Left	Thru	Right	App. Total	Left	Thru	Right	App. Total	Int. Total
Peak Hour Analysis From 10:00 AM to 01:45 PM - Peak 1 of 1																	
Peak Hour for Entire Intersection Begins at 11:15 AM																	
11:15 AM	0	0	0	0	0	0	0	0	0	0	0	0	0	0	0	0	0
11:30 AM	0	0	0	0	0	0	0	0	0	0	0	0	0	0	0	0	0
11:45 AM	0	0	0	0	0	0	0	0	0	0	0	0	0	0	0	0	0
12:00 PM	**1**	**1**	0	**2**	0	0	0	0	0	0	0	0	0	0	0	0	**2**
Total Volume	1	1	0	2	0	0	0	0	0	0	0	0	0	0	0	0	2
% App. Total	50	50	0		0	0	0		0	0	0		0	0	0		
PHF	.250	.250	.000	.250	.000	.000	.000	.000	.000	.000	.000	.000	.000	.000	.000	.000	.250

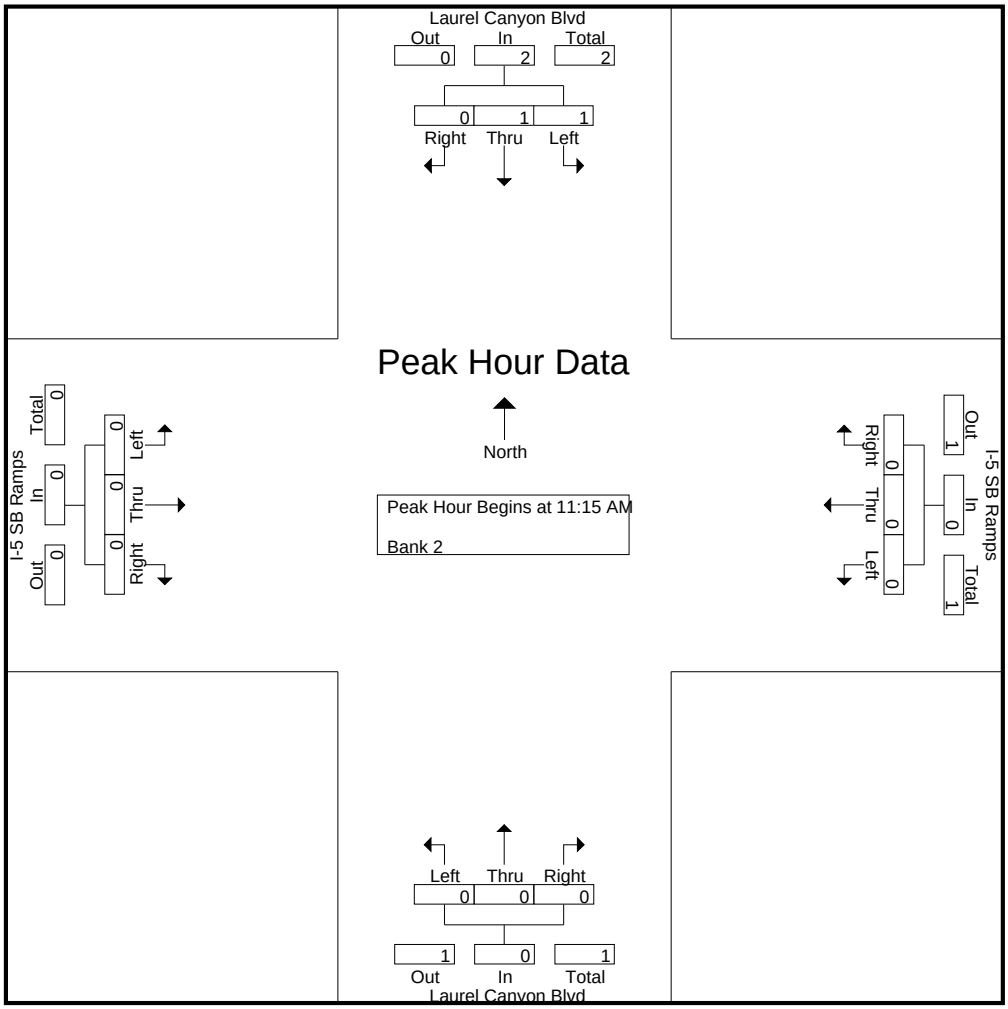

CITY TRAFFIC COUNTERS

626.991.7522

www.ctcounters.com

File Name : LC5SB_MC
Site Code : 00000000
Start Date : 1/15/2014
Page No : 4

	Laurel Canyon Blvd Southbound				I-5 SB Ramps Westbound				Laurel Canyon Blvd Northbound				I-5 SB Ramps Eastbound				
Start Time	Left	Thru	Right	App. Total	Left	Thru	Right	App. Total	Left	Thru	Right	App. Total	Left	Thru	Right	App. Total	Int. Total
Peak Hour Analysis From 02:00 PM to 05:45 PM - Peak 1 of 1																	
Peak Hour for Entire Intersection Begins at 04:00 PM																	
04:00 PM	0	0	0	0	0	0	0	0	0	**1**	0	**1**	0	0	0	0	**1**
04:15 PM	0	0	0	0	0	0	0	0	0	0	0	0	0	0	0	0	0
04:30 PM	0	**1**	0	**1**	0	0	0	0	0	0	0	0	0	0	0	0	1
04:45 PM	0	1	0	1	0	0	0	0	0	0	0	0	0	0	0	0	1
Total Volume	0	2	0	2	0	0	0	0	0	1	0	1	0	0	0	0	3
% App. Total	0	100	0		0	0	0		0	100	0		0	0	0		
PHF	.000	.500	.000	.500	.000	.000	.000	.000	.000	.250	.000	.250	.000	.000	.000	.000	.750

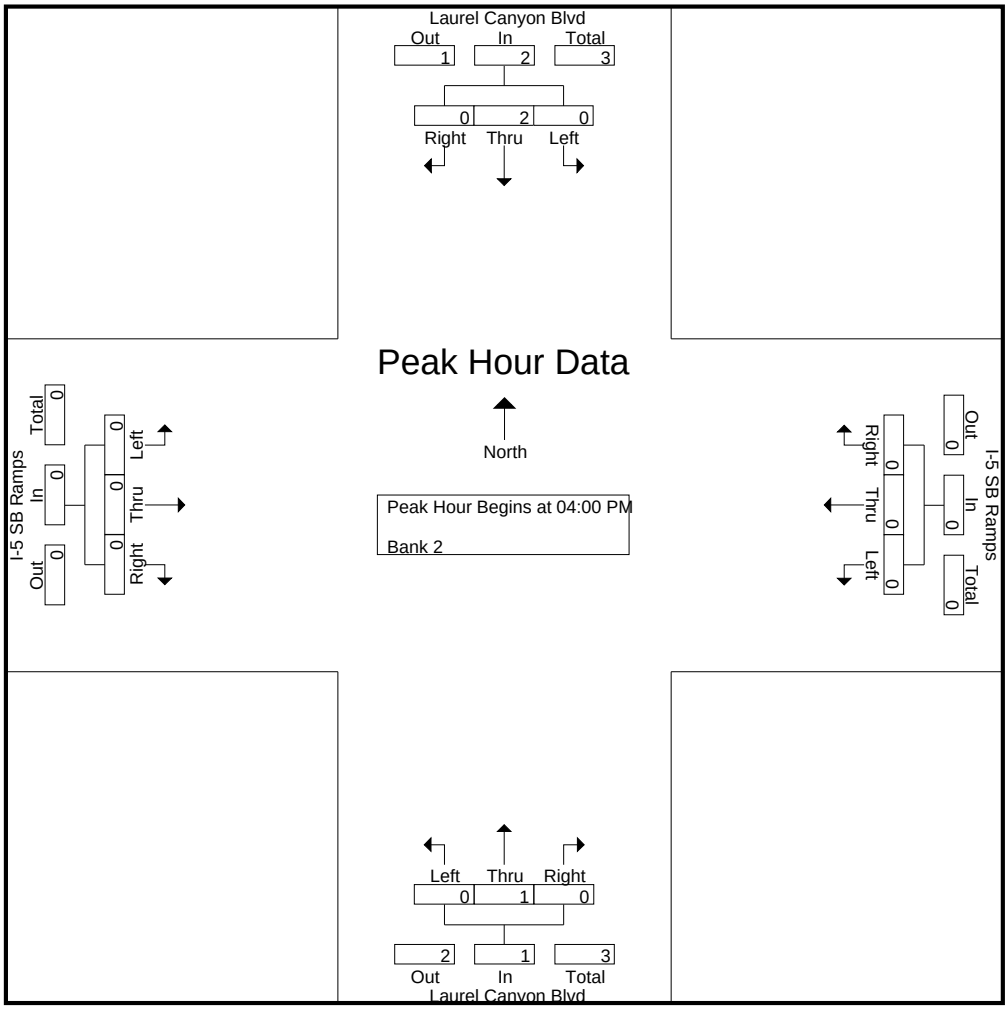

CITY TRAFFIC COUNTERS

626.991.7522

www.ctcounters.com

File Name : LC5SB_Bus
Site Code : 00000000
Start Date : 1/15/2014
Page No : 1

Groups Printed- Bank 1

	Laurel Canyon Blvd Southbound			I-5 SB Ramps Westbound			Laurel Canyon Blvd Northbound			I-5 SB Ramps Eastbound			
Start Time	Left	Thru	Right	Left	Thru	Right	Left	Thru	Right	Left	Thru	Right	Int. Total
07:00 AM	1	2	0	0	0	1	0	3	0	0	0	0	7
07:15 AM	0	3	0	0	0	0	0	2	1	0	0	0	6
07:30 AM	1	1	0	0	0	0	0	1	0	0	0	0	3
07:45 AM	0	1	0	0	0	1	0	1	0	0	0	0	3
Total	2	7	0	0	0	2	0	7	1	0	0	0	19
08:00 AM	0	3	0	0	0	0	0	1	0	0	0	0	4
08:15 AM	2	6	0	1	0	1	0	1	0	0	0	0	11
08:30 AM	0	4	0	0	0	1	0	0	0	0	0	0	5
08:45 AM	0	2	0	0	0	0	0	1	0	0	0	0	3
Total	2	15	0	1	0	2	0	3	0	0	0	0	23
09:00 AM	2	1	0	1	0	1	0	1	0	0	0	0	6
09:15 AM	2	0	0	0	0	0	0	0	0	0	0	0	2
09:30 AM	0	1	0	1	0	0	0	1	0	0	0	0	3
09:45 AM	0	0	0	0	0	0	0	2	0	0	0	0	2
Total	4	2	0	2	0	1	0	4	0	0	0	0	13
12:00 PM	0	4	0	0	0	0	0	1	0	0	0	0	5
12:30 PM	0	1	0	0	0	0	0	0	0	0	0	0	1
12:45 PM	1	0	0	0	0	0	0	2	1	0	0	0	4
Total	1	5	0	0	0	0	0	3	1	0	0	0	10
01:00 PM	0	1	0	0	0	1	0	0	0	0	0	0	2
01:15 PM	0	2	0	0	0	0	0	1	0	0	0	0	3
01:45 PM	0	1	0	0	0	0	0	2	0	0	0	0	3
Total	0	4	0	0	0	1	0	3	0	0	0	0	8
03:00 PM	1	1	0	0	0	0	0	2	0	0	0	0	4
03:15 PM	0	3	0	0	0	0	0	1	0	0	0	0	4
03:30 PM	0	2	0	1	0	1	0	2	0	0	0	0	6
03:45 PM	0	3	0	0	0	0	0	6	0	0	0	0	9
Total	1	9	0	1	0	1	0	11	0	0	0	0	23
04:00 PM	1	2	0	0	0	1	0	2	0	0	0	0	6
04:15 PM	0	2	0	0	0	0	0	1	0	0	0	0	3
04:30 PM	0	2	0	0	0	0	0	2	0	0	0	0	4
04:45 PM	0	3	0	0	0	0	0	1	0	0	0	0	4
Total	1	9	0	0	0	1	0	6	0	0	0	0	17
05:00 PM	0	1	0	0	0	0	0	1	0	0	0	0	2
05:15 PM	0	1	0	1	0	0	0	3	0	0	0	0	5
05:30 PM	0	1	0	0	0	1	0	0	0	0	0	0	2
05:45 PM	0	1	0	0	0	0	0	1	0	0	0	0	2
Total	0	4	0	1	0	1	0	5	0	0	0	0	11
Grand Total	11	55	0	5	0	9	0	42	2	0	0	0	124
Apprch %	16.7	83.3	0	35.7	0	64.3	0	95.5	4.5	0	0	0	
Total %	8.9	44.4	0	4	0	7.3	0	33.9	1.6	0	0	0	

CITY TRAFFIC COUNTERS

626.991.7522

www.ctcounters.com

File Name : LC5SB_Bus
Site Code : 00000000
Start Date : 1/15/2014
Page No : 2

	Laurel Canyon Blvd Southbound				I-5 SB Ramps Westbound				Laurel Canyon Blvd Northbound				I-5 SB Ramps Eastbound				
Start Time	Left	Thru	Right	App. Total	Left	Thru	Right	App. Total	Left	Thru	Right	App. Total	Left	Thru	Right	App. Total	Int. Total
Peak Hour Analysis From 07:00 AM to 09:45 AM - Peak 1 of 1																	
Peak Hour for Entire Intersection Begins at 08:15 AM																	
08:15 AM	**2**	**6**	0	**8**	**1**	0	**1**	**2**	0	**1**	0	**1**	0	0	0	0	**11**
08:30 AM	0	4	0	4	0	0	1	1	0	0	0	0	0	0	0	0	5
08:45 AM	0	2	0	2	0	0	0	0	0	1	0	1	0	0	0	0	3
09:00 AM	2	1	0	3	1	0	1	2	0	1	0	1	0	0	0	0	6
Total Volume	4	13	0	17	2	0	3	5	0	3	0	3	0	0	0	0	25
% App. Total	23.5	76.5	0		40	0	60		0	100	0		0	0	0		
PHF	.500	.542	.000	.531	.500	.000	.750	.625	.000	.750	.000	.750	.000	.000	.000	.000	.568

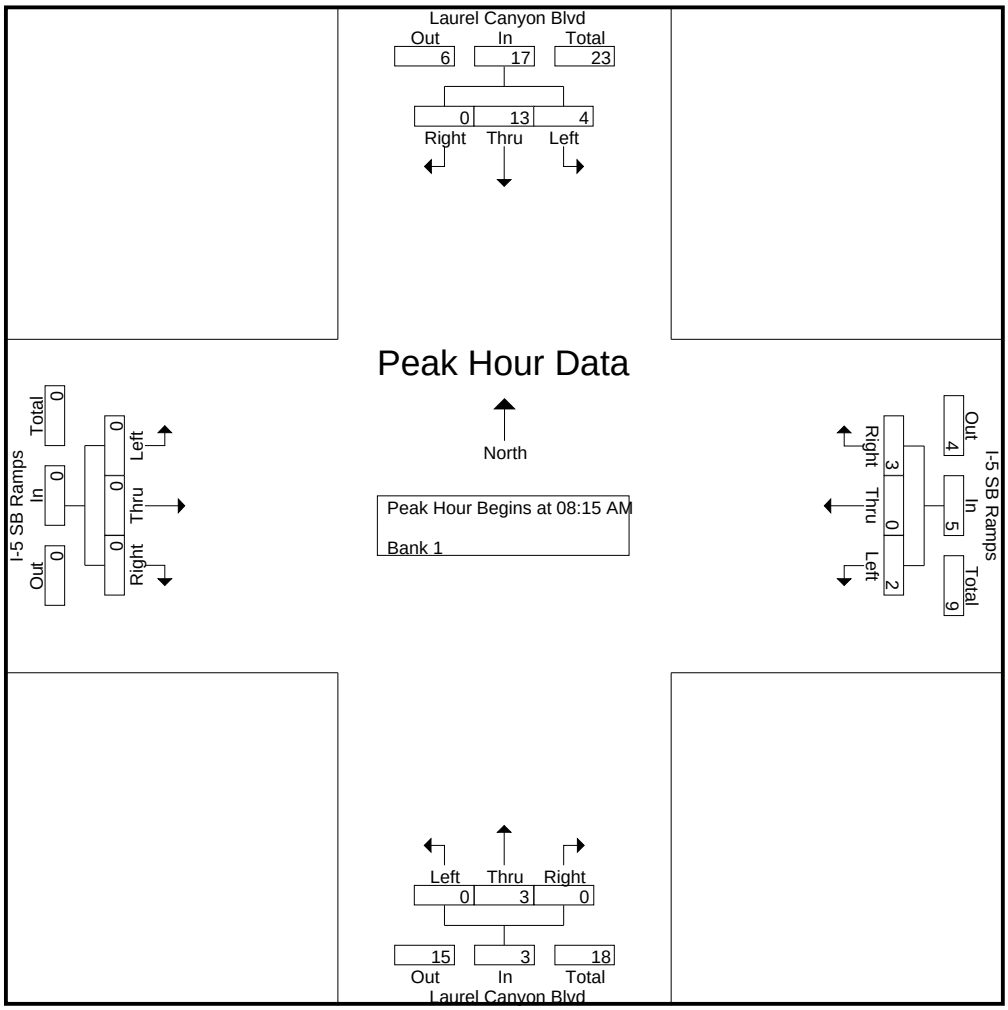

CITY TRAFFIC COUNTERS

626.991.7522

www.ctcounters.com

File Name : LC5SB_Bus
Site Code : 00000000
Start Date : 1/15/2014
Page No : 3

	Laurel Canyon Blvd Southbound				I-5 SB Ramps Westbound				Laurel Canyon Blvd Northbound				I-5 SB Ramps Eastbound				
Start Time	Left	Thru	Right	App. Total	Left	Thru	Right	App. Total	Left	Thru	Right	App. Total	Left	Thru	Right	App. Total	Int. Total
Peak Hour Analysis From 10:00 AM to 01:45 PM - Peak 1 of 1																	
Peak Hour for Entire Intersection Begins at 12:00 PM																	
12:00 PM	0	**4**	0	**4**	0	0	0	0	0	1	0	1	0	0	0	0	**5**
12:15 PM	0	0	0	0	0	0	0	0	0	0	0	0	0	0	0	0	0
12:30 PM	0	1	0	1	0	0	0	0	0	0	0	0	0	0	0	0	1
12:45 PM	**1**	0	0	1	0	0	0	0	0	**2**	**1**	**3**	0	0	0	0	4
Total Volume	1	5	0	6	0	0	0	0	0	3	1	4	0	0	0	0	10
% App. Total	16.7	83.3	0		0	0	0		0	75	25		0	0	0		
PHF	.250	.313	.000	.375	.000	.000	.000	.000	.000	.375	.250	.333	.000	.000	.000	.000	.500

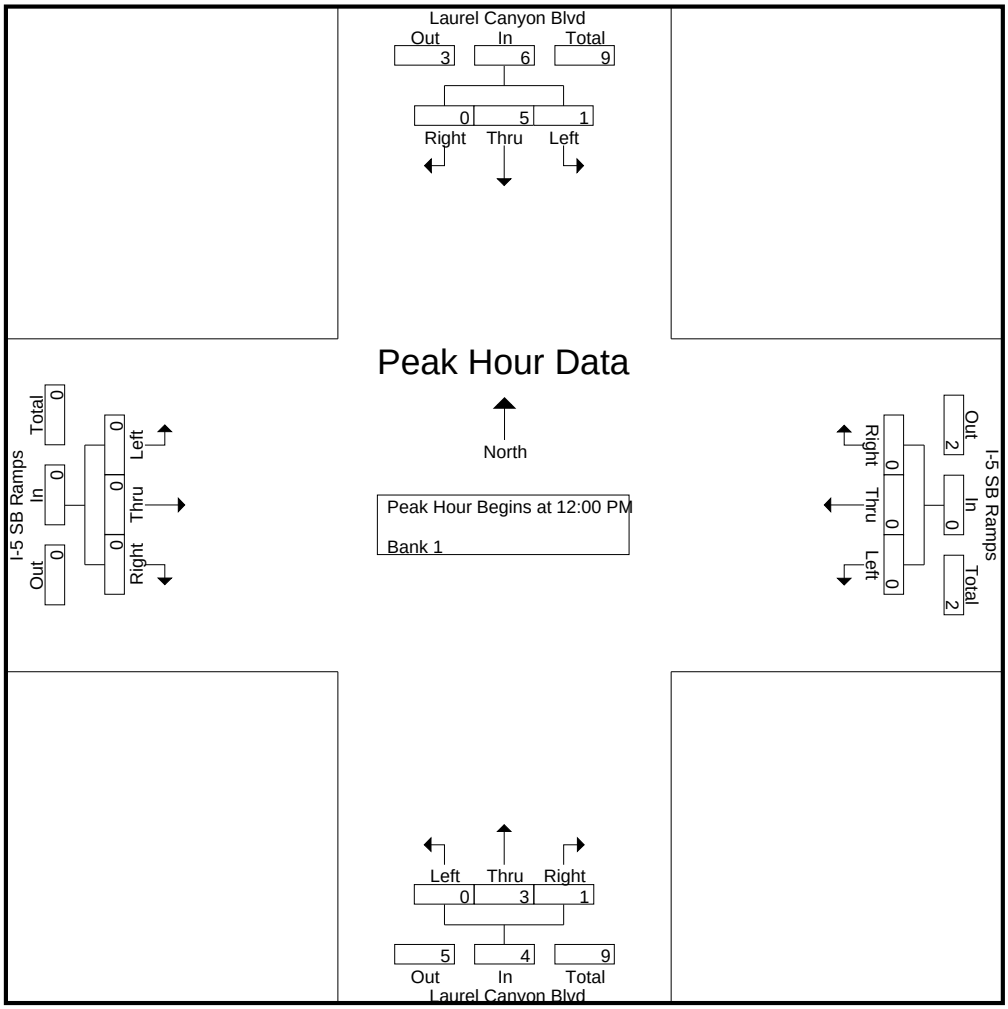

CITY TRAFFIC COUNTERS

626.991.7522

www.ctcounters.com

File Name : LC5SB_Bus
Site Code : 00000000
Start Date : 1/15/2014
Page No : 4

	Laurel Canyon Blvd Southbound				I-5 SB Ramps Westbound				Laurel Canyon Blvd Northbound				I-5 SB Ramps Eastbound				
Start Time	Left	Thru	Right	App. Total	Left	Thru	Right	App. Total	Left	Thru	Right	App. Total	Left	Thru	Right	App. Total	Int. Total
Peak Hour Analysis From 02:00 PM to 05:45 PM - Peak 1 of 1																	
Peak Hour for Entire Intersection Begins at 03:15 PM																	
03:15 PM	0	**3**	0	**3**	0	0	0	0	0	1	0	1	0	0	0	0	4
03:30 PM	0	2	0	2	**1**	0	**1**	**2**	0	2	0	2	0	0	0	0	6
03:45 PM	0	3	0	3	0	0	0	0	0	**6**	0	**6**	0	0	0	0	**9**
04:00 PM	**1**	2	0	3	0	0	1	1	0	2	0	2	0	0	0	0	6
Total Volume	1	10	0	11	1	0	2	3	0	11	0	11	0	0	0	0	25
% App. Total	9.1	90.9	0		33.3	0	66.7		0	100	0		0	0	0		
PHF	.250	.833	.000	.917	.250	.000	.500	.375	.000	.458	.000	.458	.000	.000	.000	.000	.694

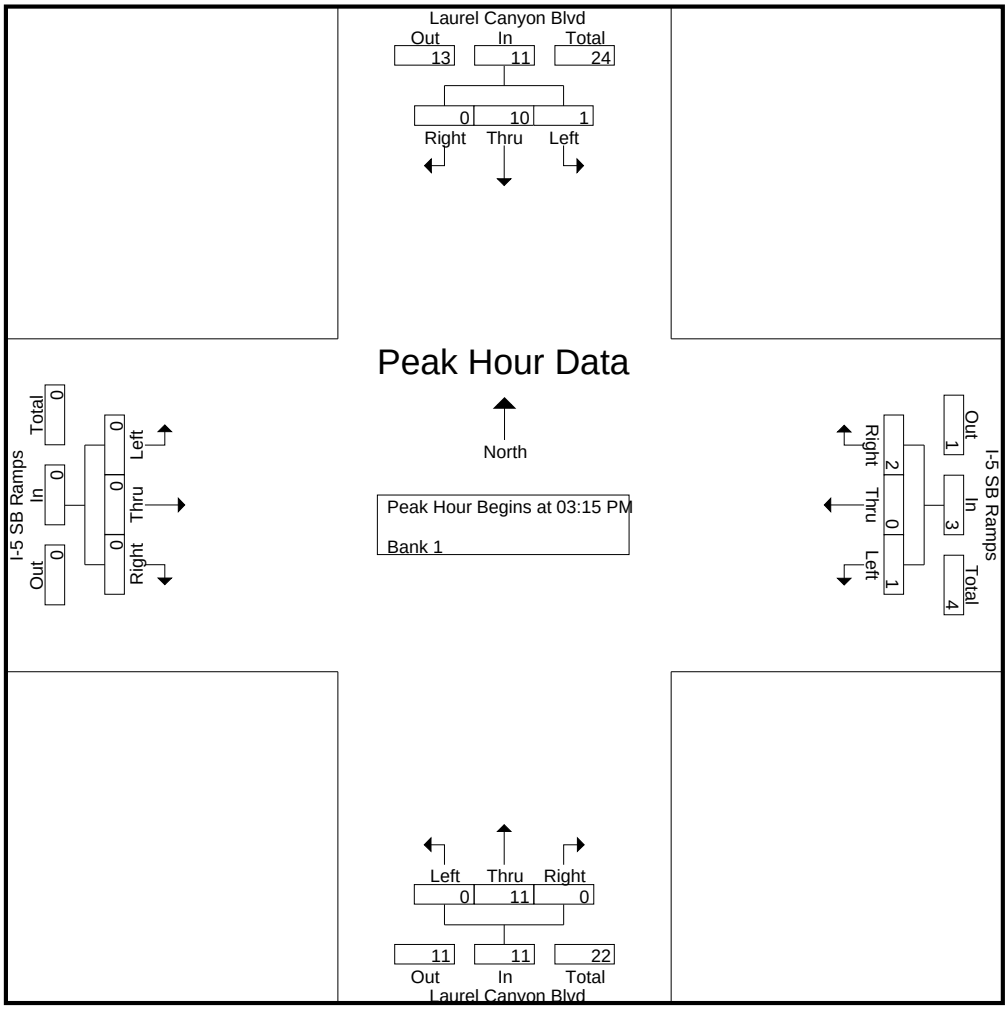

CITY TRAFFIC COUNTERS

626.991.7522

www.ctcounters.com

File Name : LC5SB_2Axle
Site Code : 00000000
Start Date : 1/15/2014
Page No : 1

Groups Printed- Unshifted

	Laurel Canyon Blvd Southbound			I-5 SB Ramps Westbound			Laurel Canyon Blvd Northbound			I-5 SB Ramps Eastbound			
Start Time	Left	Thru	Right	Left	Thru	Right	Left	Thru	Right	Left	Thru	Right	Int. Total
07:00 AM	2	0	0	0	0	1	0	1	0	0	0	0	4
07:15 AM	1	3	0	0	0	0	0	2	0	0	0	0	6
07:30 AM	2	2	0	0	0	0	0	0	0	0	0	0	4
07:45 AM	0	1	0	0	0	0	0	0	0	0	0	0	1
Total	5	6	0	0	0	1	0	3	0	0	0	0	15
08:00 AM	3	1	0	0	0	2	0	0	2	0	0	0	8
08:15 AM	2	3	0	0	0	0	0	4	0	0	0	0	9
08:30 AM	5	3	0	0	0	0	0	2	0	0	0	0	10
08:45 AM	3	7	0	0	0	0	0	0	0	0	0	0	10
Total	13	14	0	0	0	2	0	6	2	0	0	0	37
09:00 AM	3	1	0	0	0	2	0	2	0	0	0	0	8
09:15 AM	5	3	0	0	0	0	0	2	1	0	0	0	11
09:30 AM	4	4	0	0	0	3	0	3	0	0	0	0	14
09:45 AM	3	3	0	0	0	1	0	2	0	0	0	0	9
Total	15	11	0	0	0	6	0	9	1	0	0	0	42
12:00 PM	1	2	0	0	0	2	0	2	1	0	0	0	8
12:15 PM	1	1	0	1	0	1	0	1	0	0	0	0	5
12:30 PM	4	0	0	0	0	4	0	2	0	0	0	0	10
12:45 PM	4	1	0	0	0	1	0	0	0	0	0	0	6
Total	10	4	0	1	0	8	0	5	1	0	0	0	29
01:00 PM	0	1	0	0	0	0	0	1	0	0	0	0	2
01:15 PM	6	2	0	0	0	1	0	2	0	0	0	0	11
01:30 PM	0	1	0	0	0	0	0	1	1	0	0	0	3
01:45 PM	1	1	0	0	0	3	0	0	0	0	0	0	5
Total	7	5	0	0	0	4	0	4	1	0	0	0	21
03:00 PM	2	1	0	0	0	4	0	2	0	0	0	0	9
03:15 PM	1	1	0	1	0	4	0	1	1	0	0	0	9
03:30 PM	3	3	0	0	0	4	0	3	0	0	0	0	13
03:45 PM	1	0	0	0	0	3	0	2	0	0	0	0	6
Total	7	5	0	1	0	15	0	8	1	0	0	0	37
04:00 PM	1	1	0	0	0	3	0	0	0	0	0	0	5
04:15 PM	0	1	0	0	0	1	0	1	0	0	0	0	3
04:30 PM	0	0	0	0	0	2	0	0	0	0	0	0	2
04:45 PM	0	0	0	0	0	0	0	1	1	0	0	0	2
Total	1	2	0	0	0	6	0	2	1	0	0	0	12
05:00 PM	3	1	0	0	0	0	0	2	0	0	0	0	6
05:15 PM	2	0	0	0	0	2	0	1	0	0	0	0	5
05:30 PM	1	0	0	0	0	1	0	3	1	0	0	0	6
05:45 PM	0	0	0	0	0	3	0	1	0	0	0	0	4
Total	6	1	0	0	0	6	0	7	1	0	0	0	21
Grand Total	64	48	0	2	0	48	0	44	8	0	0	0	214
Apprch %	57.1	42.9	0	4	0	96	0	84.6	15.4	0	0	0	
Total %	29.9	22.4	0	0.9	0	22.4	0	20.6	3.7	0	0	0	

CITY TRAFFIC COUNTERS

626.991.7522

www.ctcounters.com

File Name : LC5SB_2Axle
Site Code : 00000000
Start Date : 1/15/2014
Page No : 2

	Laurel Canyon Blvd Southbound				I-5 SB Ramps Westbound				Laurel Canyon Blvd Northbound				I-5 SB Ramps Eastbound				
Start Time	Left	Thru	Right	App. Total	Left	Thru	Right	App. Total	Left	Thru	Right	App. Total	Left	Thru	Right	App. Total	Int. Total
Peak Hour Analysis From 07:00 AM to 09:45 AM - Peak 1 of 1																	
Peak Hour for Entire Intersection Begins at 08:45 AM																	
08:45 AM	3	**7**	0	**10**	0	0	0	0	0	0	0	0	0	0	0	0	10
09:00 AM	3	1	0	4	0	0	2	2	0	2	0	2	0	0	0	0	8
09:15 AM	**5**	3	0	8	0	0	0	0	0	2	**1**	**3**	0	0	0	0	11
09:30 AM	4	4	0	8	0	0	**3**	**3**	0	**3**	0	3	0	0	0	0	**14**
Total Volume	15	15	0	30	0	0	5	5	0	7	1	8	0	0	0	0	43
% App. Total	50	50	0		0	0	100		0	87.5	12.5		0	0	0		
PHF	.750	.536	.000	.750	.000	.000	.417	.417	.000	.583	.250	.667	.000	.000	.000	.000	.768

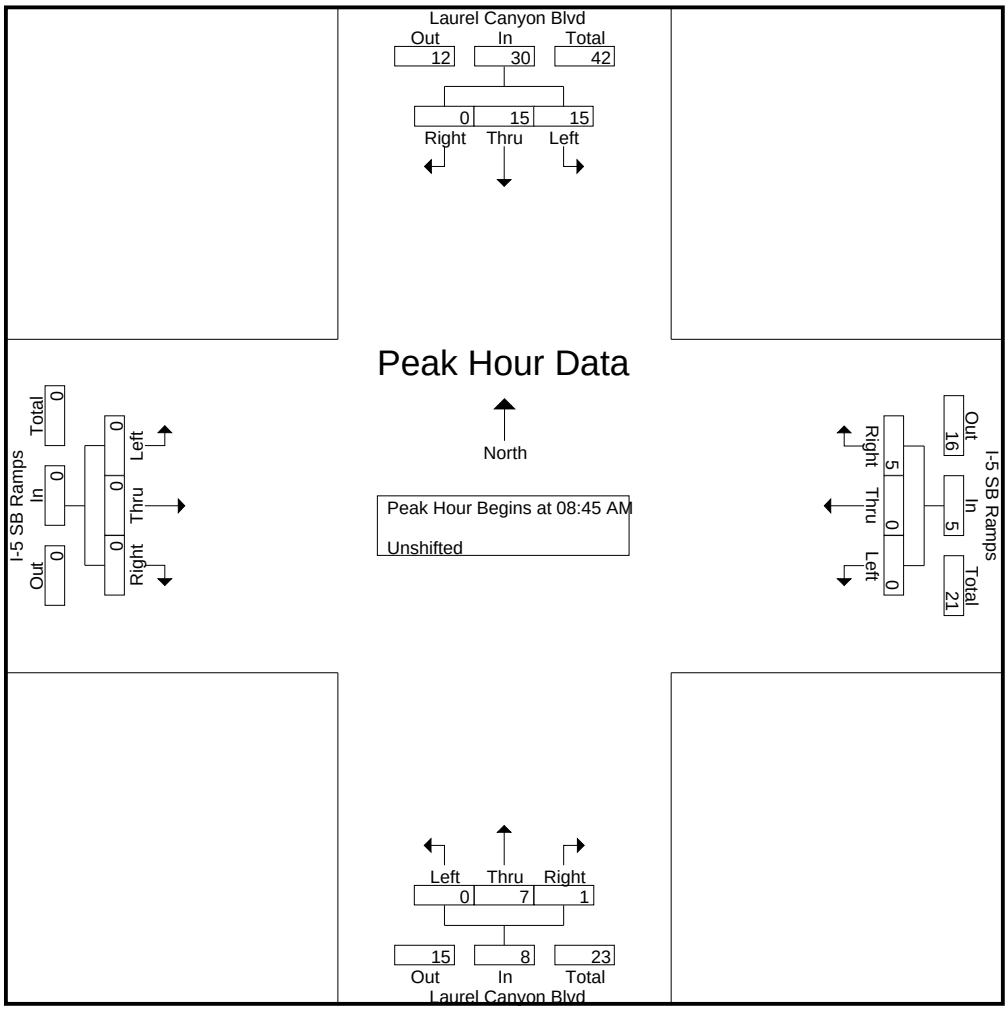

CITY TRAFFIC COUNTERS

626.991.7522

www.ctcounters.com

File Name : LC5SB_2Axle
Site Code : 00000000
Start Date : 1/15/2014
Page No : 3

	Laurel Canyon Blvd Southbound				I-5 SB Ramps Westbound				Laurel Canyon Blvd Northbound				I-5 SB Ramps Eastbound				
Start Time	Left	Thru	Right	App. Total	Left	Thru	Right	App. Total	Left	Thru	Right	App. Total	Left	Thru	Right	App. Total	Int. Total
Peak Hour Analysis From 10:00 AM to 01:45 PM - Peak 1 of 1																	
Peak Hour for Entire Intersection Begins at 12:00 PM																	
12:00 PM	1	**2**	0	3	0	0	2	2	0	**2**	**1**	**3**	0	0	0	0	8
12:15 PM	1	1	0	2	**1**	0	1	2	0	1	0	1	0	0	0	0	5
12:30 PM	**4**	0	0	4	0	0	**4**	**4**	0	2	0	2	0	0	0	0	**10**
12:45 PM	4	1	0	**5**	0	0	1	1	0	0	0	0	0	0	0	0	6
Total Volume	10	4	0	14	1	0	8	9	0	5	1	6	0	0	0	0	29
% App. Total	71.4	28.6	0		11.1	0	88.9		0	83.3	16.7		0	0	0		
PHF	.625	.500	.000	.700	.250	.000	.500	.563	.000	.625	.250	.500	.000	.000	.000	.000	.725

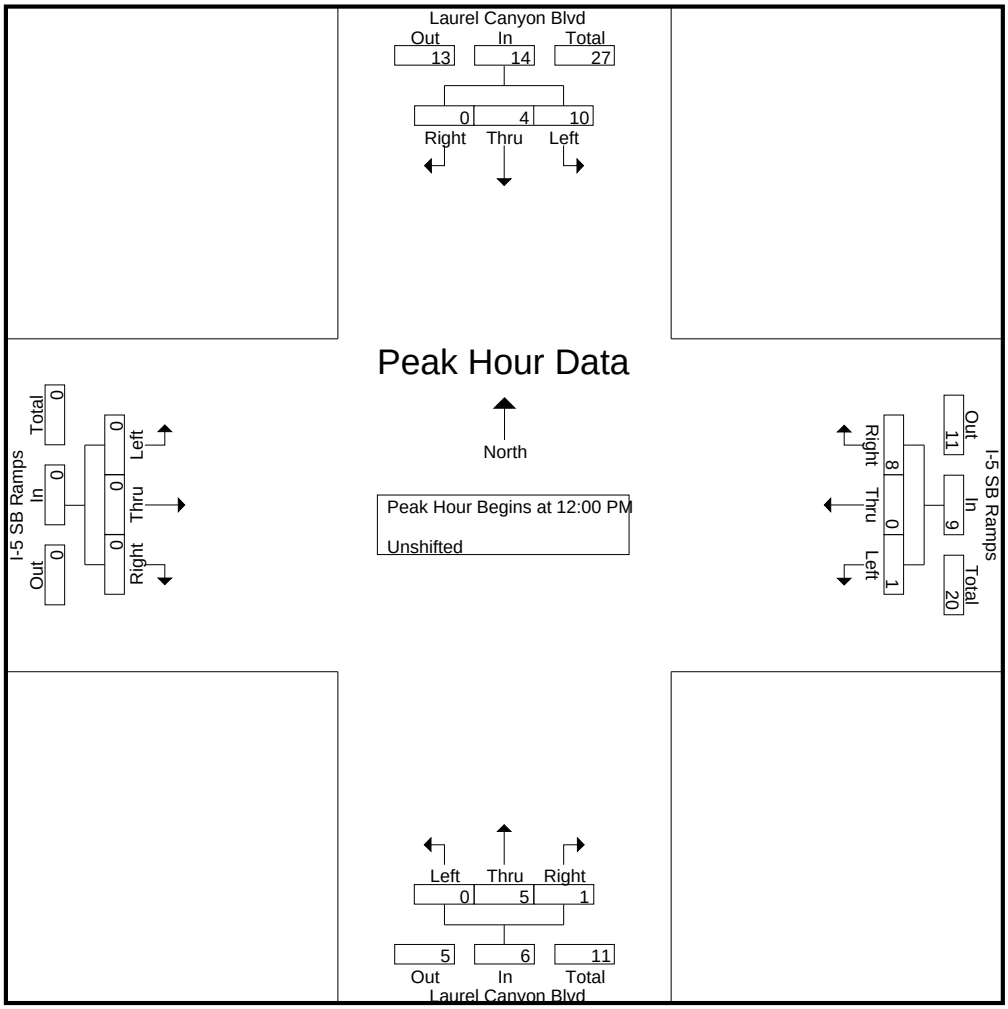

CITY TRAFFIC COUNTERS

626.991.7522

www.ctcounters.com

File Name : LC5SB_2Axle
Site Code : 00000000
Start Date : 1/15/2014
Page No : 4

	Laurel Canyon Blvd Southbound				I-5 SB Ramps Westbound				Laurel Canyon Blvd Northbound				I-5 SB Ramps Eastbound				
Start Time	Left	Thru	Right	App. Total	Left	Thru	Right	App. Total	Left	Thru	Right	App. Total	Left	Thru	Right	App. Total	Int. Total
Peak Hour Analysis From 02:00 PM to 05:45 PM - Peak 1 of 1																	
Peak Hour for Entire Intersection Begins at 03:00 PM																	
03:00 PM	2	1	0	3	0	0	**4**	4	0	2	0	2	0	0	0	0	9
03:15 PM	1	1	0	2	**1**	0	4	**5**	0	1	**1**	2	0	0	0	0	9
03:30 PM	**3**	**3**	0	**6**	0	0	4	4	0	**3**	0	**3**	0	0	0	0	**13**
03:45 PM	1	0	0	1	0	0	3	3	0	2	0	2	0	0	0	0	6
Total Volume	7	5	0	12	1	0	15	16	0	8	1	9	0	0	0	0	37
% App. Total	58.3	41.7	0		6.2	0	93.8		0	88.9	11.1		0	0	0		
PHF	.583	.417	.000	.500	.250	.000	.938	.800	.000	.667	.250	.750	.000	.000	.000	.000	.712

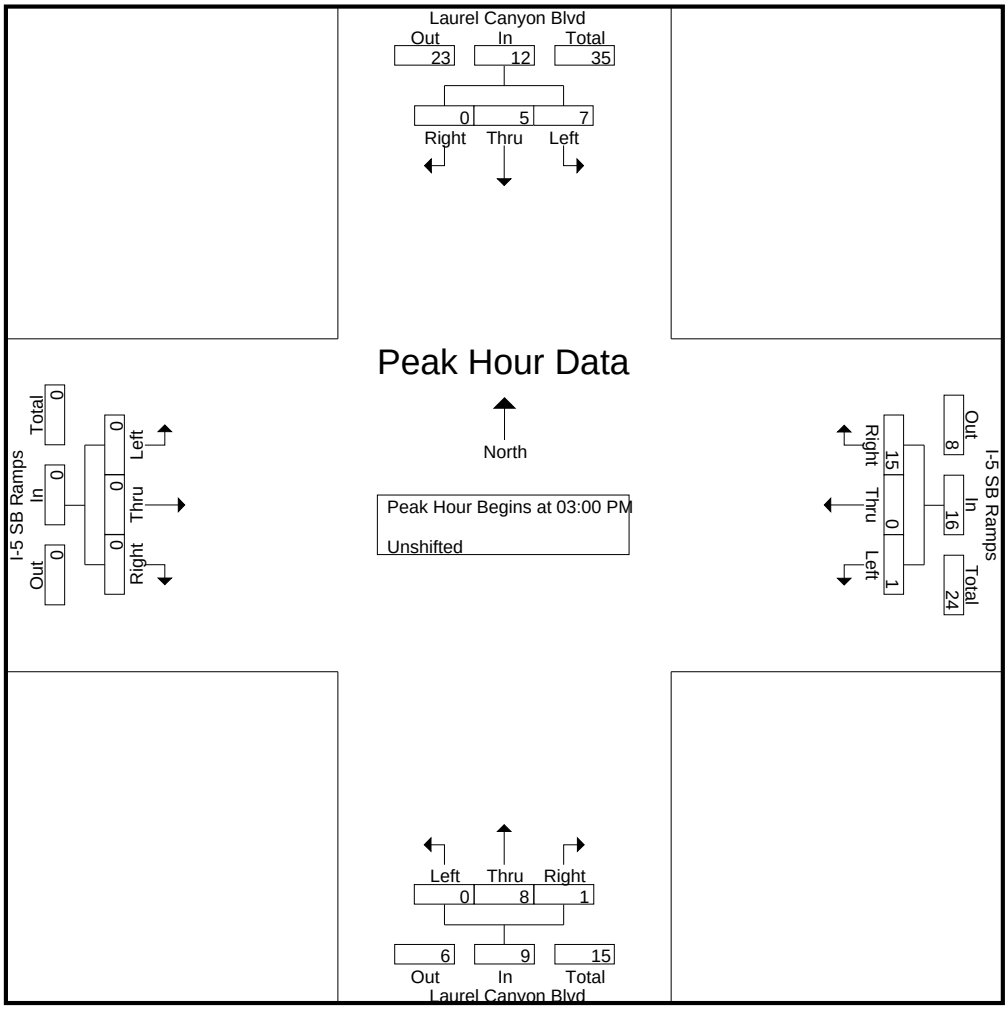

CITY TRAFFIC COUNTERS

626.991.7522

www.ctcounters.com

File Name : LC5SB_3Axle
Site Code : 00000000
Start Date : 1/15/2014
Page No : 1

Groups Printed- Bank 1

	Laurel Canyon Blvd Southbound			I-5 SB Ramps Westbound			Laurel Canyon Blvd Northbound			I-5 SB Ramps Eastbound			
Start Time	Left	Thru	Right	Left	Thru	Right	Left	Thru	Right	Left	Thru	Right	Int. Total
07:00 AM	1	0	0	0	0	1	1	0	1	0	0	1	5
07:30 AM	0	2	0	0	0	0	0	0	0	0	0	0	2
07:45 AM	1	0	0	0	0	0	0	0	0	0	0	0	1
Total	2	2	0	0	0	1	1	0	1	0	0	1	8
08:00 AM	0	2	0	0	0	0	0	1	0	0	0	0	3
08:15 AM	0	0	0	0	0	1	0	0	0	0	0	0	1
08:45 AM	1	0	0	0	0	0	0	1	0	0	0	0	2
Total	1	2	0	0	0	1	0	2	0	0	0	0	6
09:00 AM	1	1	0	0	0	0	0	1	0	0	0	0	3
09:15 AM	1	3	0	1	0	0	0	1	0	0	0	0	6
09:30 AM	2	0	0	0	0	0	0	0	0	0	0	0	2
09:45 AM	0	0	0	0	0	1	0	0	0	0	0	0	1
Total	4	4	0	1	0	1	0	2	0	0	0	0	12
12:00 PM	1	0	0	0	0	3	0	0	0	0	0	0	4
12:15 PM	0	1	0	0	0	1	0	0	0	0	0	0	2
12:30 PM	1	1	0	0	0	0	0	0	0	0	0	0	2
Total	2	2	0	0	0	4	0	0	0	0	0	0	8
01:15 PM	0	0	0	0	0	0	0	2	0	0	0	0	2
01:30 PM	2	0	0	0	0	1	0	0	0	0	0	0	3
01:45 PM	1	0	0	0	0	1	0	0	0	0	0	0	2
Total	3	0	0	0	0	2	0	2	0	0	0	0	7
03:00 PM	0	1	0	0	0	3	0	0	0	0	0	0	4
03:15 PM	0	0	0	0	0	0	0	1	0	0	0	0	1
03:30 PM	0	0	0	0	0	3	0	0	0	0	0	0	3
03:45 PM	0	0	0	0	0	2	0	0	0	0	0	0	2
Total	0	1	0	0	0	8	0	1	0	0	0	0	10
04:00 PM	1	0	0	0	0	0	0	0	0	0	0	0	1
04:15 PM	0	0	0	0	0	4	0	0	0	0	0	0	4
04:30 PM	0	0	0	0	0	1	0	2	0	0	0	0	3
04:45 PM	0	0	0	0	0	1	0	0	0	0	0	0	1
Total	1	0	0	0	0	6	0	2	0	0	0	0	9
05:00 PM	1	0	0	0	0	0	0	0	0	0	0	0	1
05:15 PM	0	0	0	0	0	4	0	0	0	0	0	0	4
05:30 PM	0	0	0	0	0	4	0	0	0	0	0	0	4
05:45 PM	0	0	0	0	0	1	0	1	0	0	0	0	2
Total	1	0	0	0	0	9	0	1	0	0	0	0	11
Grand Total	14	11	0	1	0	32	1	10	1	0	0	1	71
Apprch %	56	44	0	3	0	97	8.3	83.3	8.3	0	0	100	
Total %	19.7	15.5	0	1.4	0	45.1	1.4	14.1	1.4	0	0	1.4	

CITY TRAFFIC COUNTERS

626.991.7522

www.ctcounters.com

File Name : LC5SB_3Axle
Site Code : 00000000
Start Date : 1/15/2014
Page No : 2

	Laurel Canyon Blvd Southbound				I-5 SB Ramps Westbound				Laurel Canyon Blvd Northbound				I-5 SB Ramps Eastbound				
Start Time	Left	Thru	Right	App. Total	Left	Thru	Right	App. Total	Left	Thru	Right	App. Total	Left	Thru	Right	App. Total	Int. Total
Peak Hour Analysis From 07:00 AM to 09:45 AM - Peak 1 of 1																	
Peak Hour for Entire Intersection Begins at 08:45 AM																	
08:45 AM	1	0	0	1	0	0	0	0	0	**1**	0	**1**	0	0	0	0	2
09:00 AM	1	1	0	2	0	0	0	0	0	1	0	1	0	0	0	0	3
09:15 AM	1	**3**	0	**4**	**1**	0	0	**1**	0	1	0	1	0	0	0	0	**6**
09:30 AM	**2**	0	0	2	0	0	0	0	0	0	0	0	0	0	0	0	2
Total Volume	5	4	0	9	1	0	0	1	0	3	0	3	0	0	0	0	13
% App. Total	55.6	44.4	0		100	0	0		0	100	0		0	0	0		
PHF	.625	.333	.000	.563	.250	.000	.000	.250	.000	.750	.000	.750	.000	.000	.000	.000	.542

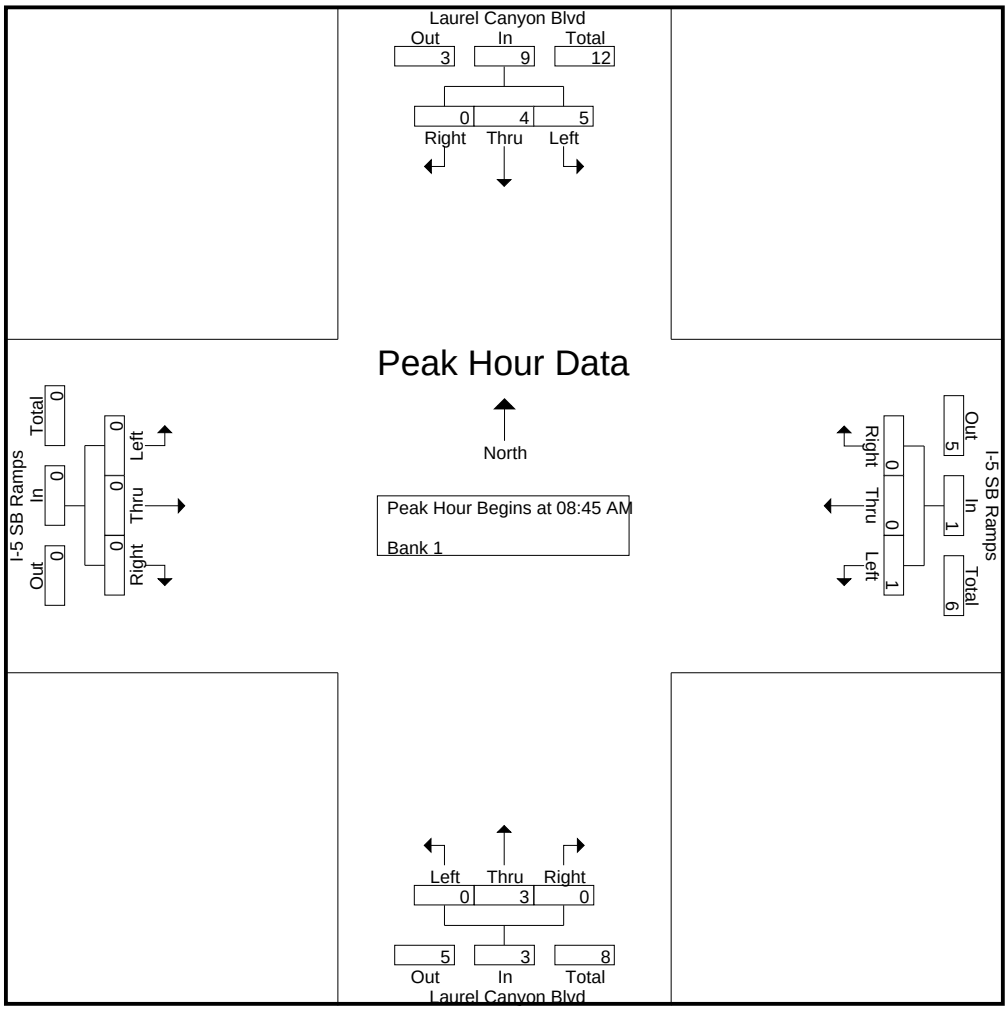

CITY TRAFFIC COUNTERS

626.991.7522

www.ctcounters.com

File Name : LC5SB_3Axle
Site Code : 00000000
Start Date : 1/15/2014
Page No : 3

	Laurel Canyon Blvd Southbound				I-5 SB Ramps Westbound				Laurel Canyon Blvd Northbound				I-5 SB Ramps Eastbound				
Start Time	Left	Thru	Right	App. Total	Left	Thru	Right	App. Total	Left	Thru	Right	App. Total	Left	Thru	Right	App. Total	Int. Total
Peak Hour Analysis From 10:00 AM to 01:45 PM - Peak 1 of 1																	
Peak Hour for Entire Intersection Begins at 11:45 AM																	
11:45 AM	0	0	0	0	0	0	0	0	0	0	0	0	0	0	0	0	0
12:00 PM	**1**	0	0	1	0	0	**3**	**3**	0	0	0	0	0	0	0	0	**4**
12:15 PM	0	**1**	0	1	0	0	1	1	0	0	0	0	0	0	0	0	2
12:30 PM	1	1	0	**2**	0	0	0	0	0	0	0	0	0	0	0	0	2
Total Volume	2	2	0	4	0	0	4	4	0	0	0	0	0	0	0	0	8
% App. Total	50	50	0		0	0	100		0	0	0		0	0	0		
PHF	.500	.500	.000	.500	.000	.000	.333	.333	.000	.000	.000	.000	.000	.000	.000	.000	.500

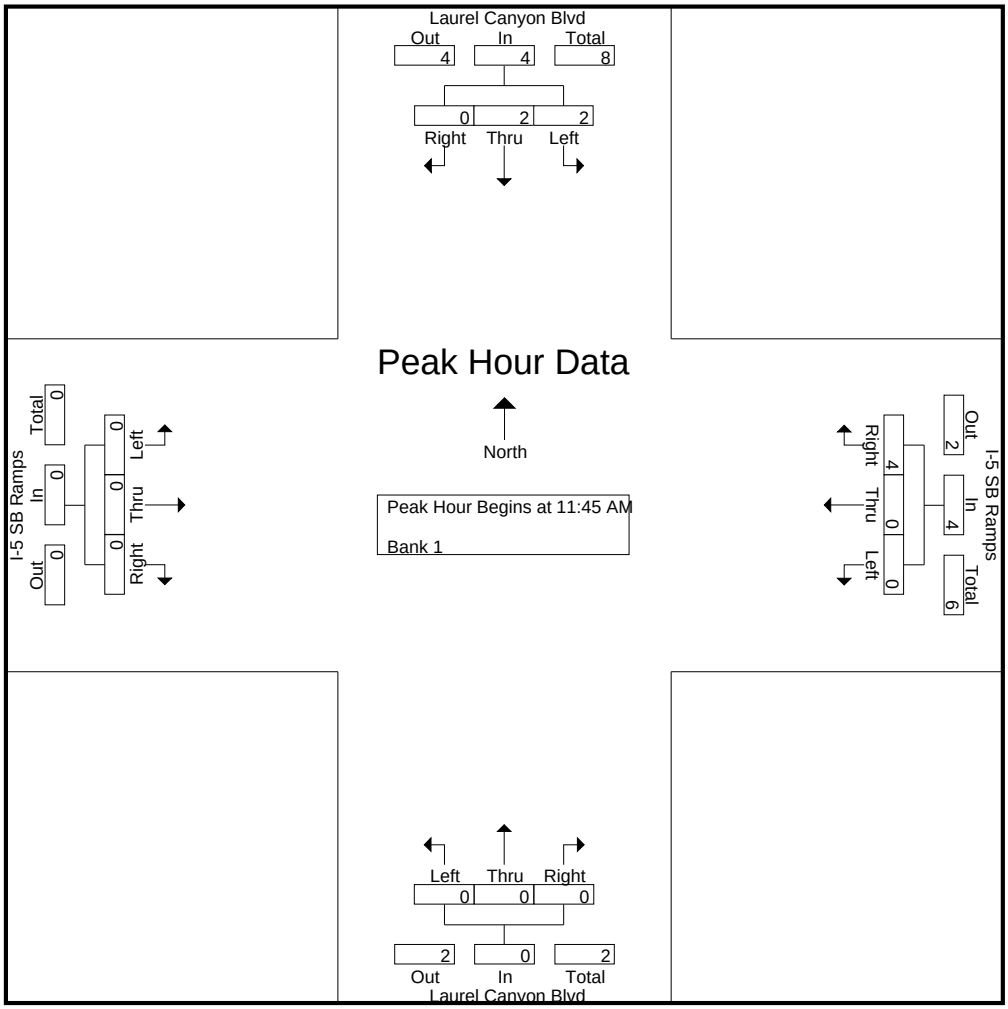

CITY TRAFFIC COUNTERS

626.991.7522

www.ctcounters.com

File Name : LC5SB_3Axle
Site Code : 00000000
Start Date : 1/15/2014
Page No : 4

	Laurel Canyon Blvd Southbound				I-5 SB Ramps Westbound				Laurel Canyon Blvd Northbound				I-5 SB Ramps Eastbound				
Start Time	Left	Thru	Right	App. Total	Left	Thru	Right	App. Total	Left	Thru	Right	App. Total	Left	Thru	Right	App. Total	Int. Total
Peak Hour Analysis From 02:00 PM to 05:45 PM - Peak 1 of 1																	
Peak Hour for Entire Intersection Begins at 05:00 PM																	
05:00 PM	**1**	0	0	**1**	0	0	0	0	0	0	0	0	0	0	0	0	1
05:15 PM	0	0	0	0	0	0	**4**	**4**	0	0	0	0	0	0	0	0	**4**
05:30 PM	0	0	0	0	0	0	4	4	0	0	0	0	0	0	0	0	4
05:45 PM	0	0	0	0	0	0	1	1	0	**1**	0	**1**	0	0	0	0	2
Total Volume	1	0	0	1	0	0	9	9	0	1	0	1	0	0	0	0	11
% App. Total	100	0	0		0	0	100		0	100	0		0	0	0		
PHF	.250	.000	.000	.250	.000	.000	.563	.563	.000	.250	.000	.250	.000	.000	.000	.000	.688

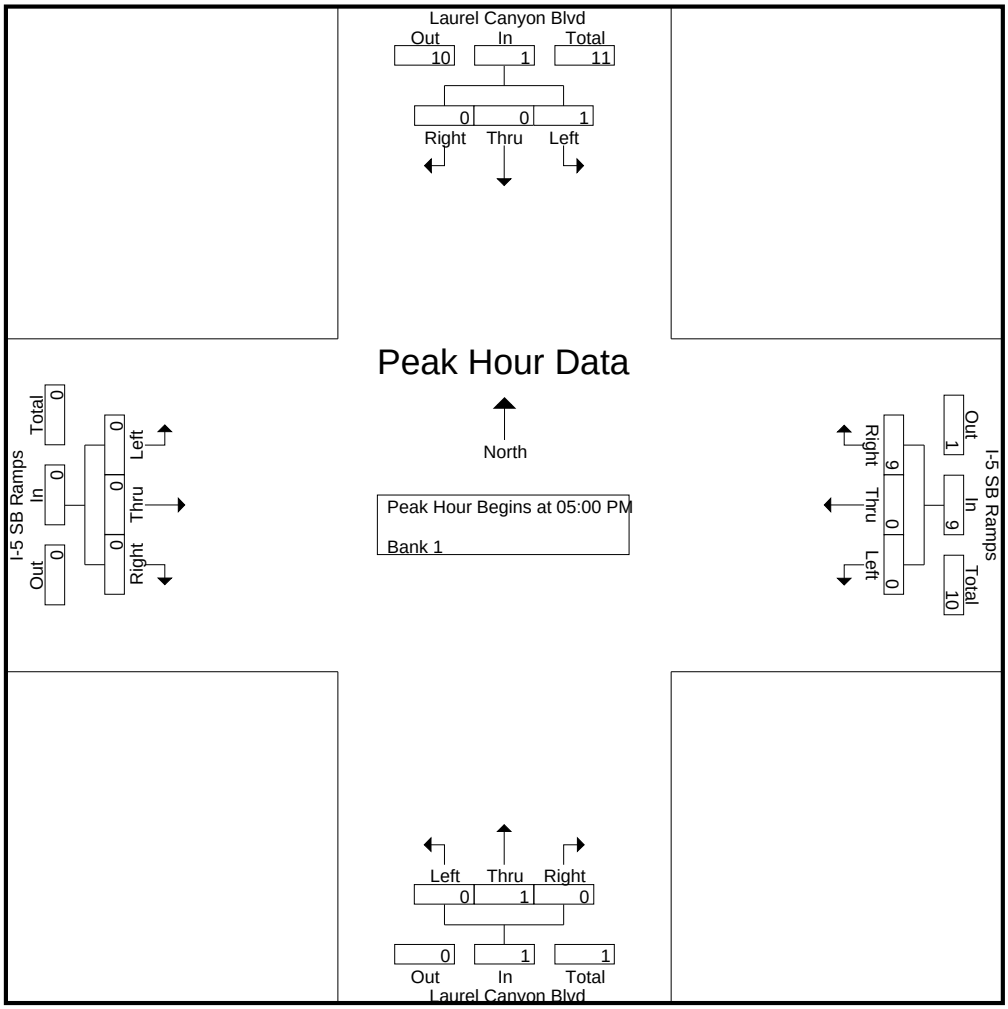

CITY TRAFFIC COUNTERS

626.991.7522

www.ctcounters.com

File Name : LC5SB_4Axle
Site Code : 00000000
Start Date : 1/15/2014
Page No : 1

Groups Printed- Bank 2

	Laurel Canyon Blvd Southbound			I-5 SB Ramps Westbound			Laurel Canyon Blvd Northbound			I-5 SB Ramps Eastbound			
Start Time	Left	Thru	Right	Left	Thru	Right	Left	Thru	Right	Left	Thru	Right	Int. Total
07:30 AM	0	2	0	0	0	0	0	0	0	0	0	0	2
Total	0	2	0	0	0	0	0	0	0	0	0	0	2
08:30 AM	0	0	0	0	0	0	0	1	0	0	0	0	1
08:45 AM	0	0	0	0	0	1	0	0	0	0	0	0	1
Total	0	0	0	0	0	1	0	1	0	0	0	0	2
09:30 AM	0	0	0	0	0	1	0	0	0	0	0	0	1
09:45 AM	0	0	0	0	0	1	0	0	0	0	0	0	1
Total	0	0	0	0	0	2	0	0	0	0	0	0	2
12:15 PM	0	0	0	0	0	1	0	0	0	0	0	0	1
Total	0	0	0	0	0	1	0	0	0	0	0	0	1
01:00 PM	0	0	0	0	0	1	0	0	0	0	0	0	1
01:45 PM	0	0	0	0	0	1	0	0	0	0	0	0	1
Total	0	0	0	0	0	2	0	0	0	0	0	0	2
03:00 PM	0	0	0	0	0	1	0	0	0	0	0	0	1
03:15 PM	0	0	0	0	0	1	0	0	0	0	0	0	1
03:45 PM	1	0	0	0	0	0	0	0	0	0	0	0	1
Total	1	0	0	0	0	2	0	0	0	0	0	0	3
05:30 PM	0	0	0	0	0	2	0	0	0	0	0	0	2
Total	0	0	0	0	0	2	0	0	0	0	0	0	2
Grand Total	1	2	0	0	0	10	0	1	0	0	0	0	14
Apprch %	33.3	66.7	0	0	0	100	0	100	0	0	0	0	
Total %	7.1	14.3	0	0	0	71.4	0	7.1	0	0	0	0	

CITY TRAFFIC COUNTERS

626.991.7522

www.ctcounters.com

File Name : LC5SB_4Axle
Site Code : 00000000
Start Date : 1/15/2014
Page No : 2

	Laurel Canyon Blvd Southbound				I-5 SB Ramps Westbound				Laurel Canyon Blvd Northbound				I-5 SB Ramps Eastbound				
Start Time	Left	Thru	Right	App. Total	Left	Thru	Right	App. Total	Left	Thru	Right	App. Total	Left	Thru	Right	App. Total	Int. Total
Peak Hour Analysis From 07:00 AM to 09:45 AM - Peak 1 of 1																	
Peak Hour for Entire Intersection Begins at 07:00 AM																	
07:00 AM	0	0	0	0	0	0	0	0	0	0	0	0	0	0	0	0	0
07:15 AM	0	0	0	0	0	0	0	0	0	0	0	0	0	0	0	0	0
07:30 AM	0	**2**	0	**2**	0	0	0	0	0	0	0	0	0	0	0	0	**2**
07:45 AM	0	0	0	0	0	0	0	0	0	0	0	0	0	0	0	0	0
Total Volume	0	2	0	2	0	0	0	0	0	0	0	0	0	0	0	0	2
% App. Total	0	100	0		0	0	0		0	0	0		0	0	0		
PHF	.000	.250	.000	.250	.000	.000	.000	.000	.000	.000	.000	.000	.000	.000	.000	.000	.250

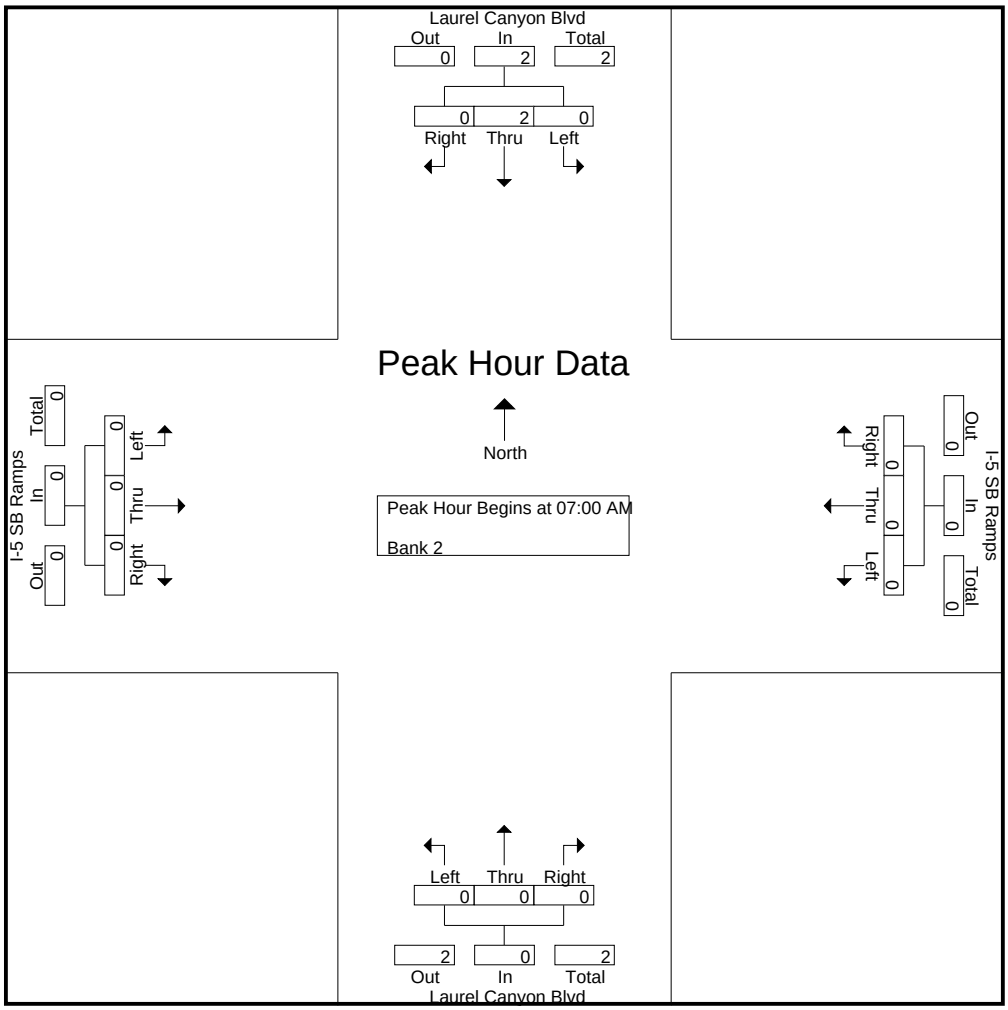

CITY TRAFFIC COUNTERS

626.991.7522

www.ctcounters.com

File Name : LC5SB_4Axle
Site Code : 00000000
Start Date : 1/15/2014
Page No : 3

	Laurel Canyon Blvd Southbound				I-5 SB Ramps Westbound				Laurel Canyon Blvd Northbound				I-5 SB Ramps Eastbound				
Start Time	Left	Thru	Right	App. Total	Left	Thru	Right	App. Total	Left	Thru	Right	App. Total	Left	Thru	Right	App. Total	Int. Total
Peak Hour Analysis From 10:00 AM to 01:45 PM - Peak 1 of 1																	
Peak Hour for Entire Intersection Begins at 12:15 PM																	
12:15 PM	0	0	0	0	0	0	**1**	**1**	0	0	0	0	0	0	0	0	**1**
12:30 PM	0	0	0	0	0	0	0	0	0	0	0	0	0	0	0	0	0
12:45 PM	0	0	0	0	0	0	0	0	0	0	0	0	0	0	0	0	0
01:00 PM	0	0	0	0	0	0	1	1	0	0	0	0	0	0	0	0	1
Total Volume	0	0	0	0	0	0	2	2	0	0	0	0	0	0	0	0	2
% App. Total	0	0	0		0	0	100		0	0	0		0	0	0		
PHF	.000	.000	.000	.000	.000	.000	.500	.500	.000	.000	.000	.000	.000	.000	.000	.000	.500

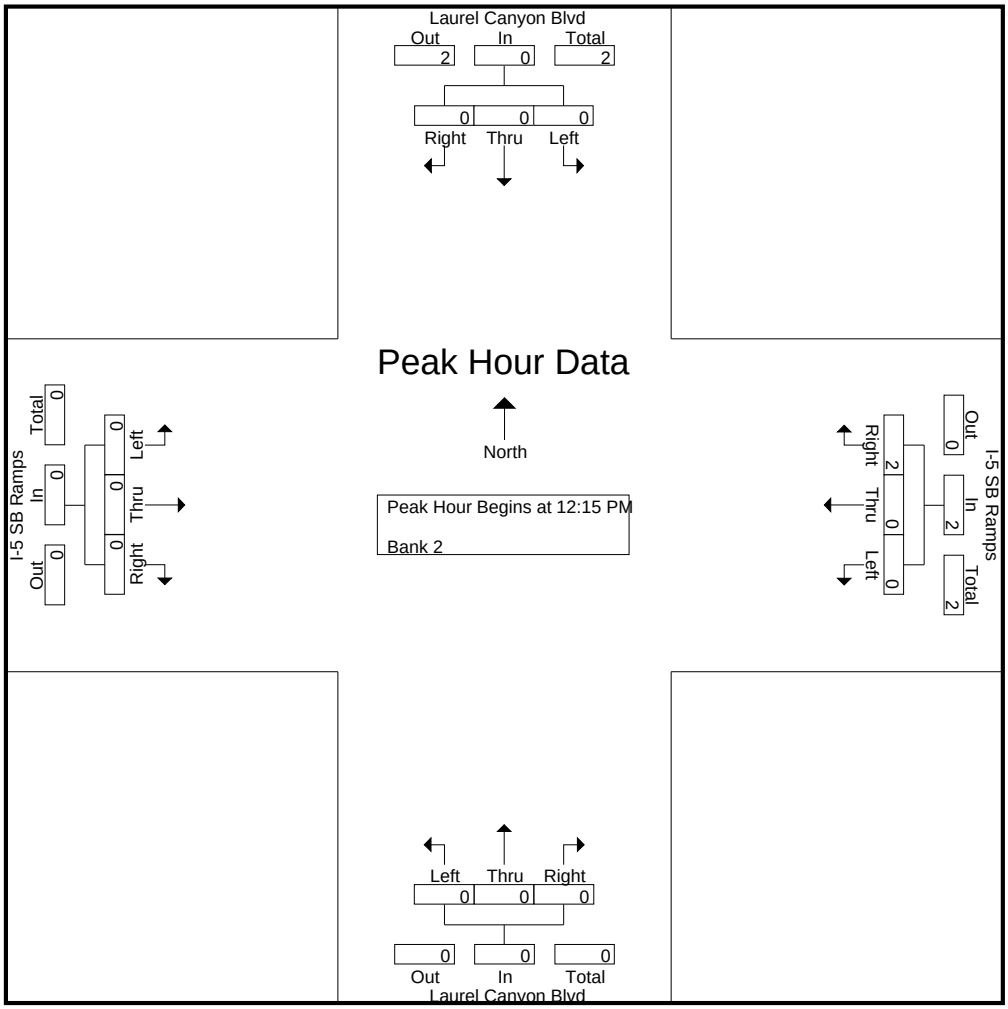

CITY TRAFFIC COUNTERS

626.991.7522

www.ctcounters.com

File Name : LC5SB_4Axle
Site Code : 00000000
Start Date : 1/15/2014
Page No : 4

	Laurel Canyon Blvd Southbound				I-5 SB Ramps Westbound				Laurel Canyon Blvd Northbound				I-5 SB Ramps Eastbound				
Start Time	Left	Thru	Right	App. Total	Left	Thru	Right	App. Total	Left	Thru	Right	App. Total	Left	Thru	Right	App. Total	Int. Total
Peak Hour Analysis From 02:00 PM to 05:45 PM - Peak 1 of 1																	
Peak Hour for Entire Intersection Begins at 03:00 PM																	
03:00 PM	0	0	0	0	0	0	**1**	**1**	0	0	0	0	0	0	0	0	**1**
03:15 PM	0	0	0	0	0	0	1	1	0	0	0	0	0	0	0	0	1
03:30 PM	0	0	0	0	0	0	0	0	0	0	0	0	0	0	0	0	0
03:45 PM	**1**	0	0	**1**	0	0	0	0	0	0	0	0	0	0	0	0	1
Total Volume	1	0	0	1	0	0	2	2	0	0	0	0	0	0	0	0	3
% App. Total	100	0	0		0	0	100		0	0	0		0	0	0		
PHF	.250	.000	.000	.250	.000	.000	.500	.500	.000	.000	.000	.000	.000	.000	.000	.000	.750

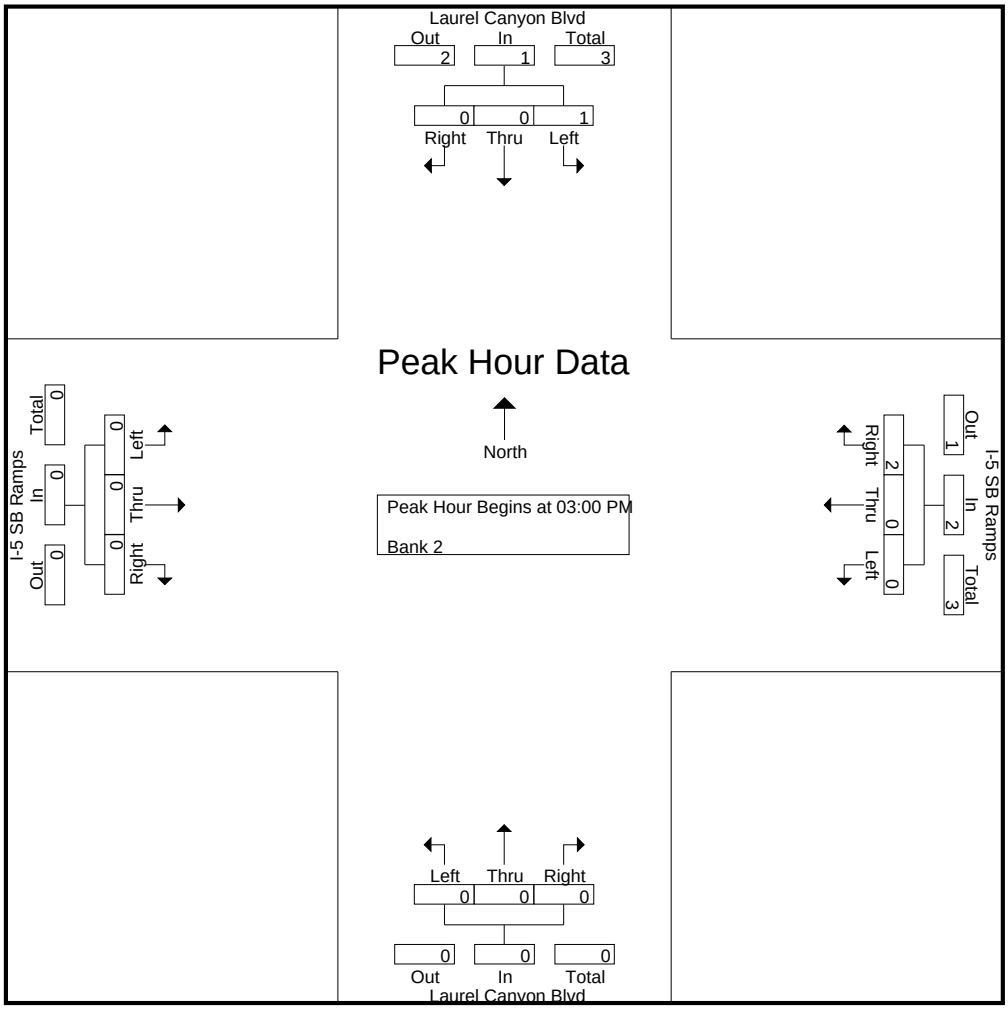

CITY TRAFFIC COUNTERS

626.991.7522

www.ctcounters.com

File Name : lc5sb_5axle
Site Code : 00000000
Start Date : 1/15/2014
Page No : 1

Groups Printed- Bank 2

	Laurel Canyon Blvd Southbound			I-5 SB Ramps Westbound			Laurel Canyon Blvd Northbound			I-5 SB Ramps Eastbound			
Start Time	Left	Thru	Right	Left	Thru	Right	Left	Thru	Right	Left	Thru	Right	Int. Total
07:00 AM	0	0	0	0	0	0	0	3	0	0	0	0	3
07:15 AM	2	0	0	0	0	0	0	2	0	0	0	0	4
07:30 AM	1	0	0	0	0	0	0	0	0	0	0	0	1
Total	3	0	0	0	0	0	0	5	0	0	0	0	8
08:00 AM	4	0	0	0	0	0	0	0	0	0	0	0	4
08:15 AM	2	1	0	0	0	0	0	0	0	0	0	0	3
08:30 AM	3	2	0	0	0	0	0	0	0	0	0	0	5
08:45 AM	1	1	0	0	0	1	0	2	0	0	0	0	5
Total	10	4	0	0	0	1	0	2	0	0	0	0	17
09:00 AM	2	0	0	0	0	0	0	0	0	0	0	0	2
09:15 AM	4	0	0	0	0	0	0	1	0	0	0	0	5
09:45 AM	0	0	0	0	0	2	0	0	1	0	0	0	3
Total	6	0	0	0	0	2	0	1	1	0	0	0	10
12:00 PM	2	1	0	0	0	2	0	1	0	0	0	0	6
12:15 PM	3	0	0	0	0	1	0	0	1	0	0	0	5
12:30 PM	1	0	0	0	0	0	0	0	1	0	0	0	2
12:45 PM	1	0	0	0	0	2	0	1	0	0	0	0	4
Total	7	1	0	0	0	5	0	2	2	0	0	0	17
01:15 PM	3	0	0	0	0	0	0	0	1	0	0	0	4
01:30 PM	1	1	0	0	0	0	0	0	0	0	0	0	2
01:45 PM	3	0	0	0	0	0	0	1	0	0	0	0	4
Total	7	1	0	0	0	0	0	1	1	0	0	0	10
03:00 PM	2	0	0	0	0	0	0	0	0	0	0	0	2
03:15 PM	0	0	0	0	0	2	0	0	0	0	0	0	2
03:30 PM	1	0	0	0	0	1	0	0	0	0	0	0	2
Total	3	0	0	0	0	3	0	0	0	0	0	0	6
04:00 PM	0	0	0	0	0	0	0	1	0	0	0	0	1
04:15 PM	1	0	0	0	0	0	0	0	0	0	0	0	1
Total	1	0	0	0	0	0	0	1	0	0	0	0	2
05:00 PM	1	0	0	0	0	0	0	0	0	0	0	0	1
05:15 PM	1	0	0	0	0	1	0	0	0	0	0	0	2
05:30 PM	2	0	0	0	0	0	0	1	0	0	0	0	3
05:45 PM	0	1	0	0	0	1	0	1	0	0	0	0	3
Total	4	1	0	0	0	2	0	2	0	0	0	0	9
Grand Total	41	7	0	0	0	13	0	14	4	0	0	0	79
Apprch %	85.4	14.6	0	0	0	100	0	77.8	22.2	0	0	0	
Total %	51.9	8.9	0	0	0	16.5	0	17.7	5.1	0	0	0	

CITY TRAFFIC COUNTERS

626.991.7522

www.ctcounters.com

File Name : lc5sb_5axle
Site Code : 00000000
Start Date : 1/15/2014
Page No : 2

	Laurel Canyon Blvd Southbound				I-5 SB Ramps Westbound				Laurel Canyon Blvd Northbound				I-5 SB Ramps Eastbound				
Start Time	Left	Thru	Right	App. Total	Left	Thru	Right	App. Total	Left	Thru	Right	App. Total	Left	Thru	Right	App. Total	Int. Total
Peak Hour Analysis From 07:00 AM to 09:45 AM - Peak 1 of 1																	
Peak Hour for Entire Intersection Begins at 08:00 AM																	
08:00 AM	**4**	0	0	4	0	0	0	0	0	0	0	0	0	0	0	0	4
08:15 AM	2	1	0	3	0	0	0	0	0	0	0	0	0	0	0	0	3
08:30 AM	3	**2**	0	**5**	0	0	0	0	0	0	0	0	0	0	0	0	**5**
08:45 AM	1	1	0	2	0	0	**1**	**1**	0	**2**	0	**2**	0	0	0	0	5
Total Volume	10	4	0	14	0	0	1	1	0	2	0	2	0	0	0	0	17
% App. Total	71.4	28.6	0		0	0	100		0	100	0		0	0	0		
PHF	.625	.500	.000	.700	.000	.000	.250	.250	.000	.250	.000	.250	.000	.000	.000	.000	.850

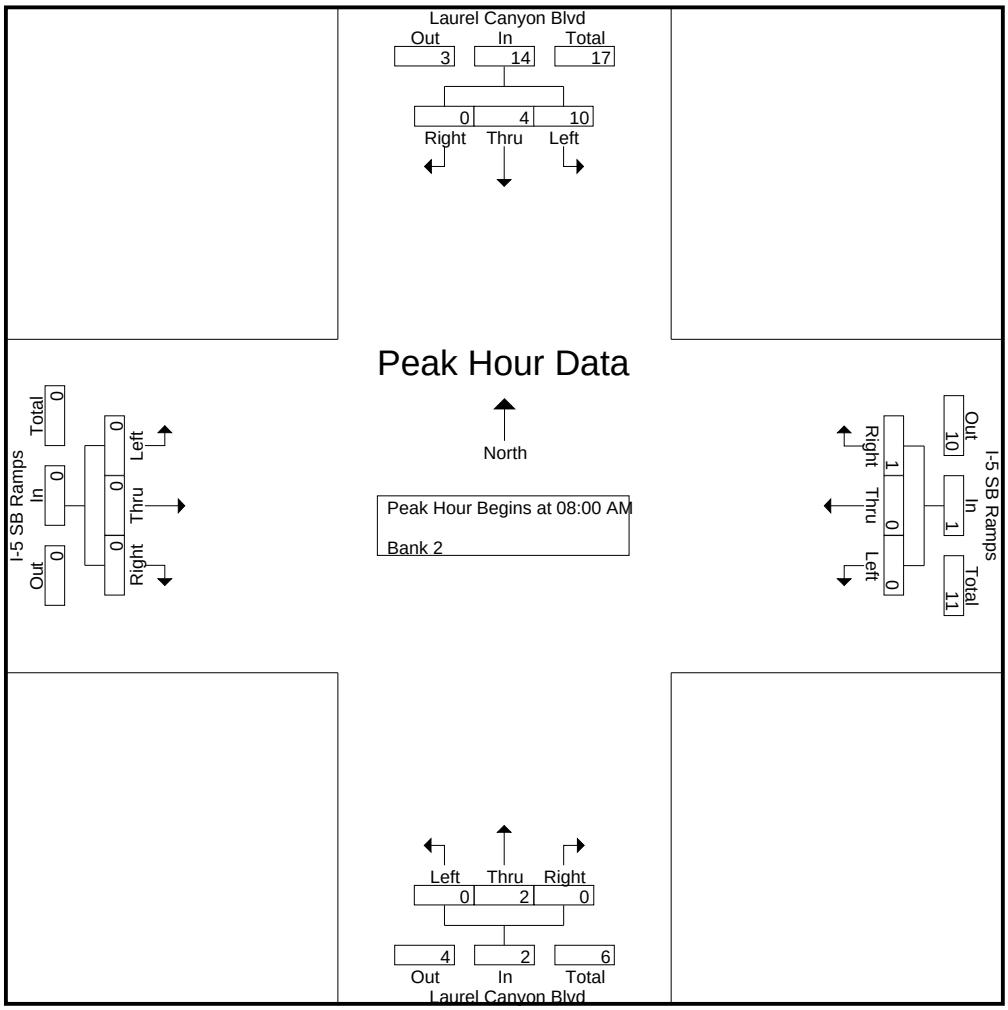

CITY TRAFFIC COUNTERS

626.991.7522

www.ctcounters.com

File Name : lc5sb_5axle
Site Code : 00000000
Start Date : 1/15/2014
Page No : 3

	Laurel Canyon Blvd Southbound				I-5 SB Ramps Westbound				Laurel Canyon Blvd Northbound				I-5 SB Ramps Eastbound				
Start Time	Left	Thru	Right	App. Total	Left	Thru	Right	App. Total	Left	Thru	Right	App. Total	Left	Thru	Right	App. Total	Int. Total
Peak Hour Analysis From 10:00 AM to 01:45 PM - Peak 1 of 1																	
Peak Hour for Entire Intersection Begins at 12:00 PM																	
12:00 PM	2	**1**	0	**3**	0	0	**2**	**2**	0	**1**	0	**1**	0	0	0	0	**6**
12:15 PM	**3**	0	0	3	0	0	1	1	0	0	**1**	1	0	0	0	0	5
12:30 PM	1	0	0	1	0	0	0	0	0	0	1	1	0	0	0	0	2
12:45 PM	1	0	0	1	0	0	2	2	0	1	0	1	0	0	0	0	4
Total Volume	7	1	0	8	0	0	5	5	0	2	2	4	0	0	0	0	17
% App. Total	87.5	12.5	0		0	0	100		0	50	50		0	0	0		
PHF	.583	.250	.000	.667	.000	.000	.625	.625	.000	.500	.500	1.00	.000	.000	.000	.000	.708

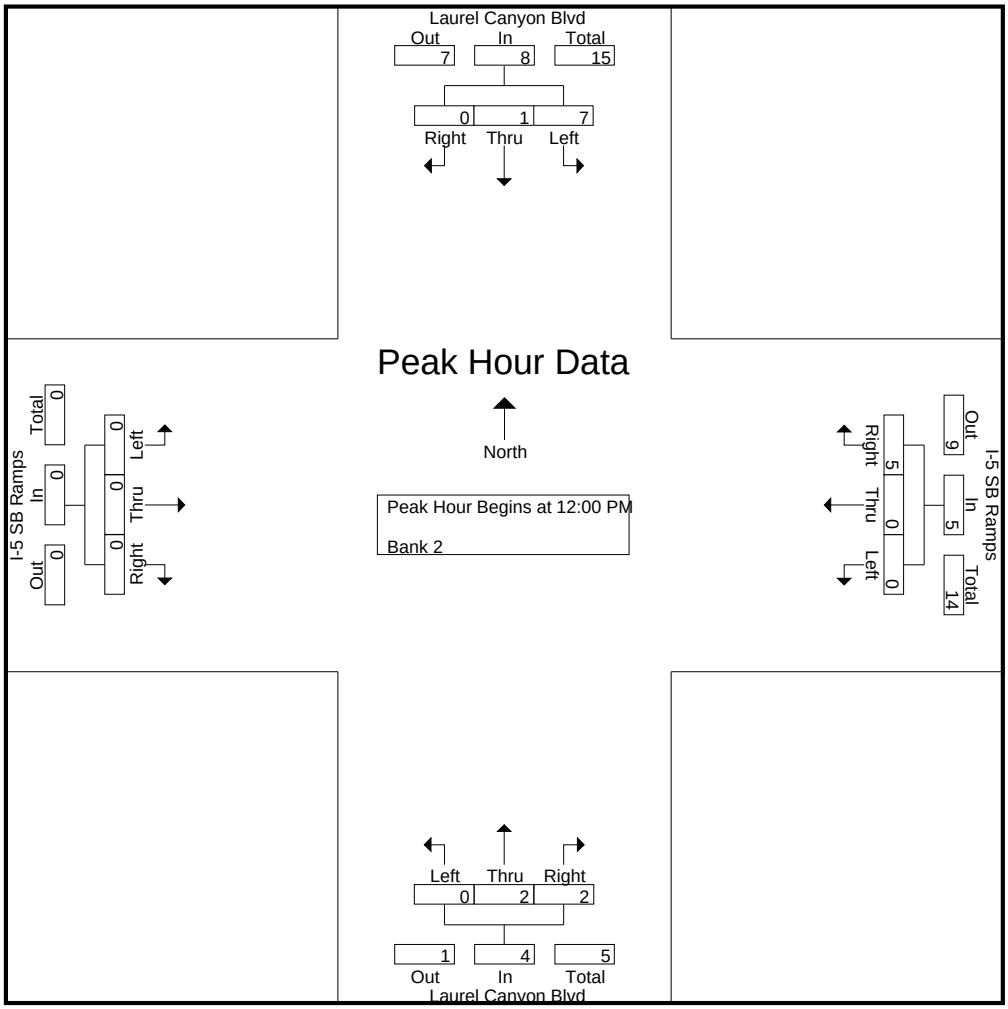

CITY TRAFFIC COUNTERS

626.991.7522

www.ctcounters.com

File Name : lc5sb_5axle
Site Code : 00000000
Start Date : 1/15/2014
Page No : 4

	Laurel Canyon Blvd Southbound				I-5 SB Ramps Westbound				Laurel Canyon Blvd Northbound				I-5 SB Ramps Eastbound				
Start Time	Left	Thru	Right	App. Total	Left	Thru	Right	App. Total	Left	Thru	Right	App. Total	Left	Thru	Right	App. Total	Int. Total
Peak Hour Analysis From 02:00 PM to 05:45 PM - Peak 1 of 1																	
Peak Hour for Entire Intersection Begins at 05:00 PM																	
05:00 PM	1	0	0	1	0	0	0	0	0	0	0	0	0	0	0	0	1
05:15 PM	1	0	0	1	0	0	**1**	**1**	0	0	0	0	0	0	0	0	2
05:30 PM	**2**	0	0	**2**	0	0	0	0	0	**1**	0	**1**	0	0	0	0	**3**
05:45 PM	0	**1**	0	1	0	0	1	1	0	1	0	1	0	0	0	0	3
Total Volume	4	1	0	5	0	0	2	2	0	2	0	2	0	0	0	0	9
% App. Total	80	20	0		0	0	100		0	100	0		0	0	0		
PHF	.500	.250	.000	.625	.000	.000	.500	.500	.000	.500	.000	.500	.000	.000	.000	.000	.750

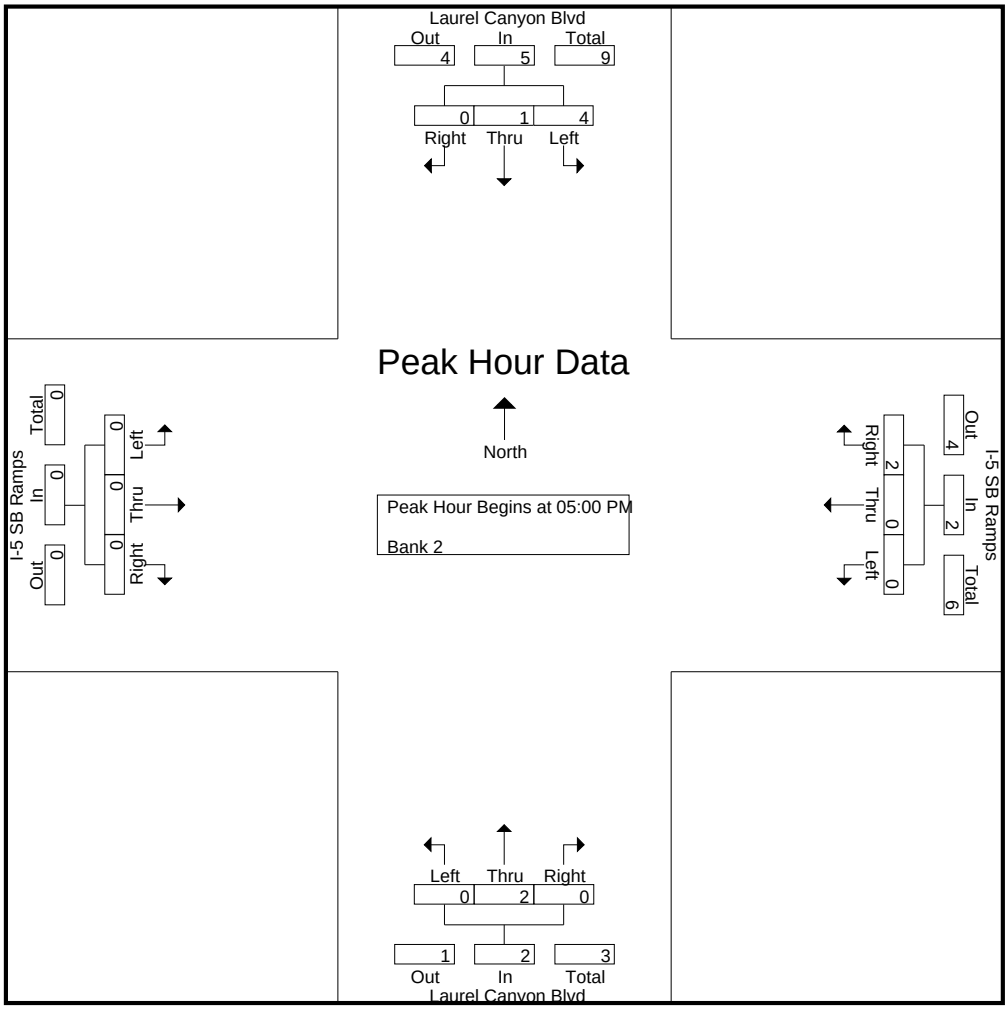

CITY TRAFFIC COUNTERS

626.991.7522

www.ctcounters.com

File Name : 5NBRinSheldon
Site Code : 00000000
Start Date : 1/15/2014
Page No : 1

Groups Printed- Unshifted

	Rincon Ave Southbound			Sheldon St Westbound			I-5 NB Ramp Northbound			Sheldon St Eastbound			
Start Time	Left	Thru	Right	Left	Thru	Right	Left	Thru	Right	Left	Thru	Right	Int. Total
07:00 AM	1	1	4	31	149	9	0	0	0	4	120	27	346
07:15 AM	1	0	13	38	229	10	0	0	0	4	170	40	505
07:30 AM	1	0	8	37	243	1	0	0	0	11	210	62	573
07:45 AM	1	0	4	28	226	5	0	0	0	11	241	44	560
Total	4	1	29	134	847	25	0	0	0	30	741	173	1984
08:00 AM	5	2	7	33	205	10	0	0	0	7	175	39	483
08:15 AM	2	1	4	24	187	5	0	0	0	10	160	14	407
08:30 AM	1	3	2	25	144	4	0	0	0	4	115	19	317
08:45 AM	1	1	4	20	120	4	0	0	0	0	133	26	309
Total	9	7	17	102	656	23	0	0	0	21	583	98	1516
09:00 AM	2	1	3	15	114	6	0	0	0	5	112	20	278
09:15 AM	3	0	2	16	122	2	0	0	0	4	117	19	285
09:30 AM	3	0	3	16	131	2	0	0	0	6	125	20	306
09:45 AM	1	2	6	15	105	0	0	0	0	3	107	18	257
Total	9	3	14	62	472	10	0	0	0	18	461	77	1126
12:00 PM	6	1	5	23	120	3	0	0	0	3	122	27	310
12:15 PM	0	1	10	22	102	5	0	0	0	7	126	35	308
12:30 PM	4	1	7	24	128	5	0	0	0	5	120	21	315
12:45 PM	2	1	7	12	103	2	0	0	0	5	110	19	261
Total	12	4	29	81	453	15	0	0	0	20	478	102	1194
01:00 PM	4	1	2	9	103	0	0	0	0	3	139	20	281
01:15 PM	0	0	1	9	102	0	0	0	0	2	112	20	246
01:30 PM	3	1	5	17	109	1	0	0	0	2	137	27	302
01:45 PM	1	1	4	17	114	0	0	0	0	8	102	20	267
Total	8	3	12	52	428	1	0	0	0	15	490	87	1096
03:00 PM	0	2	5	26	214	1	0	0	0	15	179	31	473
03:15 PM	1	0	8	30	168	0	0	0	0	4	201	31	443
03:30 PM	2	1	6	41	160	1	0	0	0	6	219	42	478
03:45 PM	3	1	4	42	159	2	0	0	0	11	188	40	450
Total	6	4	23	139	701	4	0	0	0	36	787	144	1844
04:00 PM	1	1	5	37	153	7	0	0	0	11	212	44	471
04:15 PM	3	2	4	28	135	1	0	0	0	8	202	44	427
04:30 PM	2	1	2	44	143	3	0	0	0	6	183	55	439
04:45 PM	1	1	6	30	181	3	0	0	0	5	201	56	484
Total	7	5	17	139	612	14	0	0	0	30	798	199	1821
05:00 PM	2	1	7	32	188	2	0	0	0	10	206	40	488
05:15 PM	0	1	8	22	185	4	0	0	0	14	185	58	477
05:30 PM	5	1	8	20	174	4	0	0	0	8	216	52	488
05:45 PM	2	0	3	22	125	1	0	0	0	5	204	57	419
Total	9	3	26	96	672	11	0	0	0	37	811	207	1872
Grand Total	64	30	167	805	4841	103	0	0	0	207	5149	1087	12453
Apprch %	24.5	11.5	64	14	84.2	1.8	0	0	0	3.2	79.9	16.9	
Total %	0.5	0.2	1.3	6.5	38.9	0.8	0	0	0	1.7	41.3	8.7	

CITY TRAFFIC COUNTERS

626.991.7522

www.ctcounters.com

File Name : 5NBRinSheldon
Site Code : 00000000
Start Date : 1/15/2014
Page No : 2

	Rincon Ave Southbound				Sheldon St Westbound				I-5 NB Ramp Northbound				Sheldon St Eastbound				
Start Time	Left	Thru	Right	App. Total	Left	Thru	Right	App. Total	Left	Thru	Right	App. Total	Left	Thru	Right	App. Total	Int. Total
Peak Hour Analysis From 07:00 AM to 09:45 AM - Peak 1 of 1																	
Peak Hour for Entire Intersection Begins at 07:15 AM																	
07:15 AM	1	0	**13**	**14**	**38**	229	**10**	277	0	0	0	0	4	170	40	214	505
07:30 AM	1	0	8	9	37	**243**	1	**281**	0	0	0	0	**11**	210	**62**	283	**573**
07:45 AM	1	0	4	5	28	226	5	259	0	0	0	0	11	**241**	44	**296**	560
08:00 AM	**5**	**2**	7	14	33	205	10	248	0	0	0	0	7	175	39	221	483
Total Volume	8	2	32	42	136	903	26	1065	0	0	0	0	33	796	185	1014	2121
% App. Total	19	4.8	76.2		12.8	84.8	2.4		0	0	0		3.3	78.5	18.2		
PHF	.400	.250	.615	.750	.895	.929	.650	.948	.000	.000	.000	.000	.750	.826	.746	.856	.925

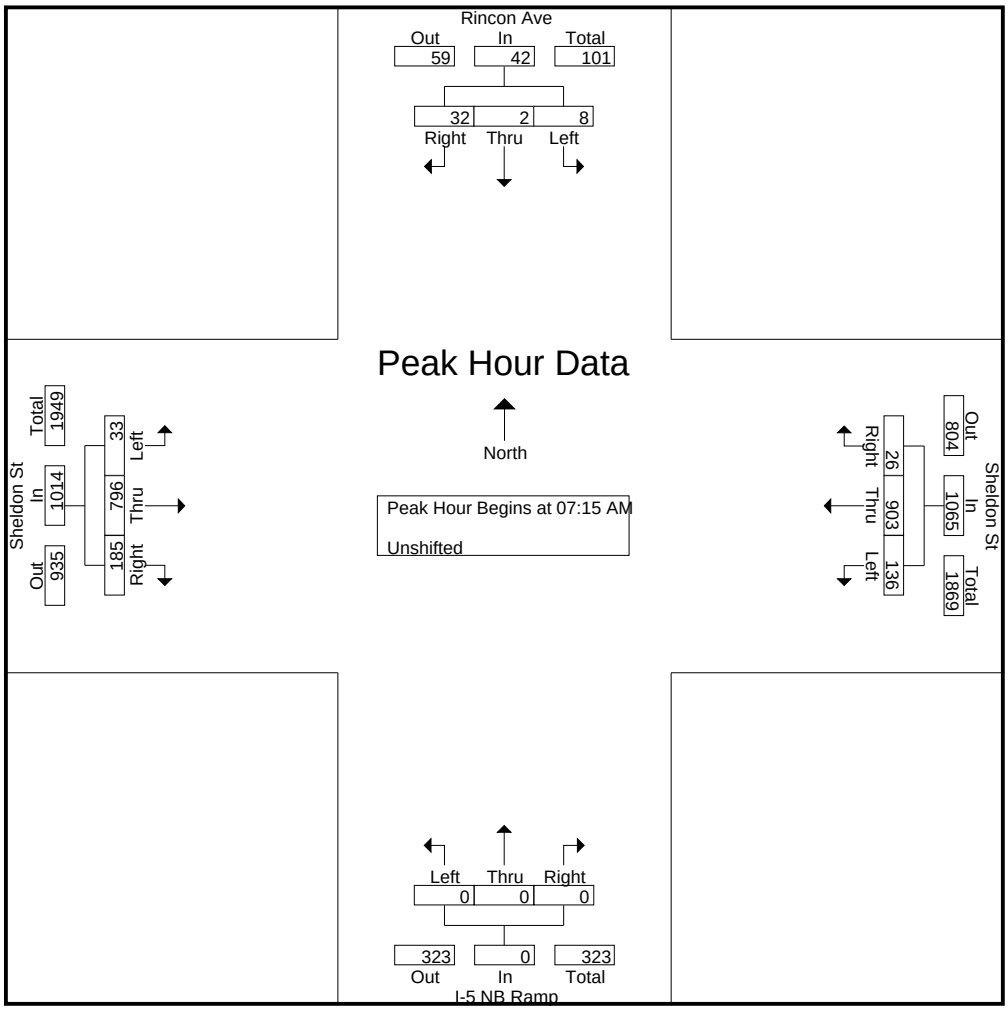

CITY TRAFFIC COUNTERS

626.991.7522

www.ctcounters.com

File Name : 5NBRinSheldon
Site Code : 00000000
Start Date : 1/15/2014
Page No : 3

	Rincon Ave Southbound				Sheldon St Westbound				I-5 NB Ramp Northbound				Sheldon St Eastbound				
Start Time	Left	Thru	Right	App. Total	Left	Thru	Right	App. Total	Left	Thru	Right	App. Total	Left	Thru	Right	App. Total	Int. Total
Peak Hour Analysis From 10:00 AM to 01:45 PM - Peak 1 of 1																	
Peak Hour for Entire Intersection Begins at 12:00 PM																	
12:00 PM	**6**	**1**	5	**12**	23	120	3	146	0	0	0	0	3	122	27	152	310
12:15 PM	0	1	**10**	11	22	102	**5**	129	0	0	0	0	**7**	**126**	**35**	**168**	308
12:30 PM	4	1	7	12	**24**	**128**	5	**157**	0	0	0	0	5	120	21	146	**315**
12:45 PM	2	1	7	10	12	103	2	117	0	0	0	0	5	110	19	134	261
Total Volume	12	4	29	45	81	453	15	549	0	0	0	0	20	478	102	600	1194
% App. Total	26.7	8.9	64.4		14.8	82.5	2.7		0	0	0		3.3	79.7	17		
PHF	.500	1.00	.725	.938	.844	.885	.750	.874	.000	.000	.000	.000	.714	.948	.729	.893	.948

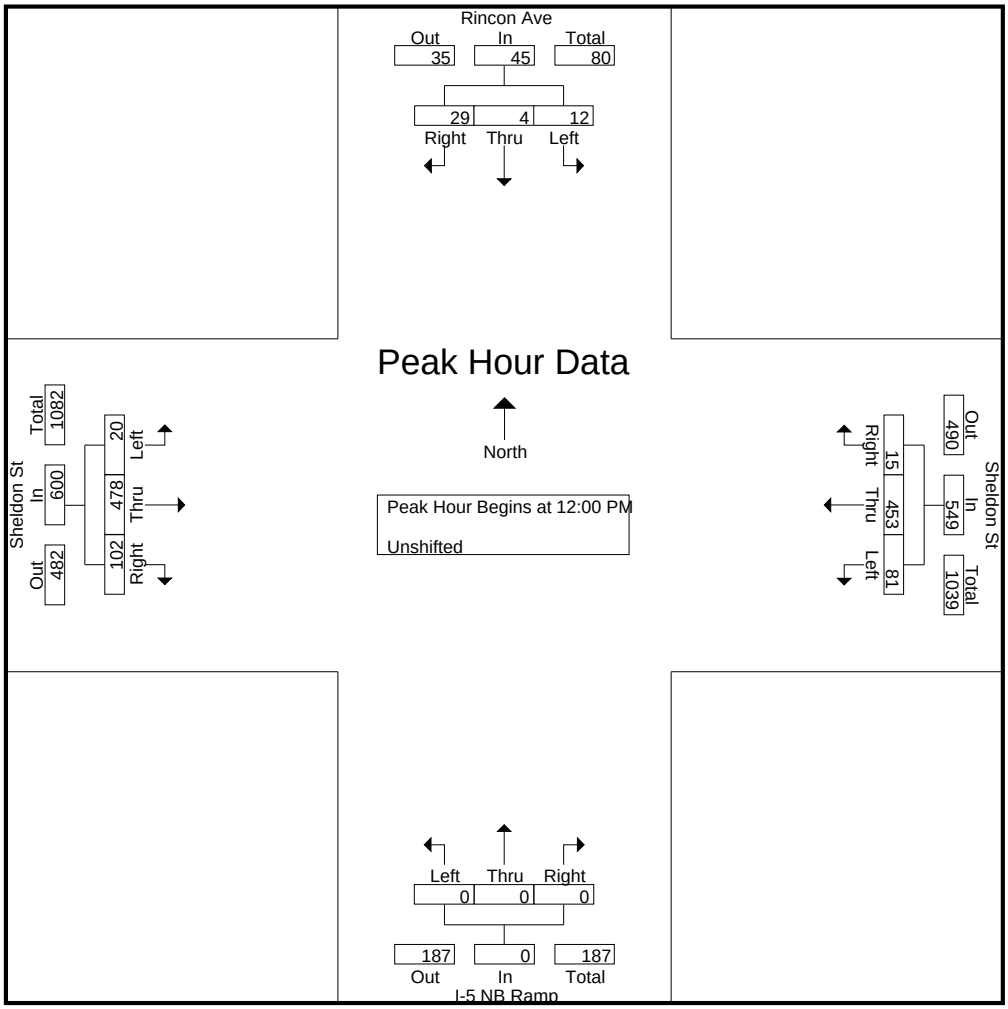

CITY TRAFFIC COUNTERS

626.991.7522

www.ctcounters.com

File Name : 5NBRinSheldon
Site Code : 00000000
Start Date : 1/15/2014
Page No : 4

	Rincon Ave Southbound				Sheldon St Westbound				I-5 NB Ramp Northbound				Sheldon St Eastbound				
Start Time	Left	Thru	Right	App. Total	Left	Thru	Right	App. Total	Left	Thru	Right	App. Total	Left	Thru	Right	App. Total	Int. Total
Peak Hour Analysis From 02:00 PM to 05:45 PM - Peak 1 of 1																	
Peak Hour for Entire Intersection Begins at 04:45 PM																	
04:45 PM	1	**1**	6	8	30	181	3	214	0	0	0	0	5	201	56	262	484
05:00 PM	2	1	7	10	**32**	**188**	2	**222**	0	0	0	0	10	206	40	256	**488**
05:15 PM	0	1	**8**	9	22	185	**4**	211	0	0	0	0	**14**	185	**58**	257	477
05:30 PM	**5**	1	8	**14**	20	174	4	198	0	0	0	0	8	**216**	52	**276**	488
Total Volume	8	4	29	41	104	728	13	845	0	0	0	0	37	808	206	1051	1937
% App. Total	19.5	9.8	70.7		12.3	86.2	1.5		0	0	0		3.5	76.9	19.6		
PHF	.400	1.00	.906	.732	.813	.968	.813	.952	.000	.000	.000	.000	.661	.935	.888	.952	.992

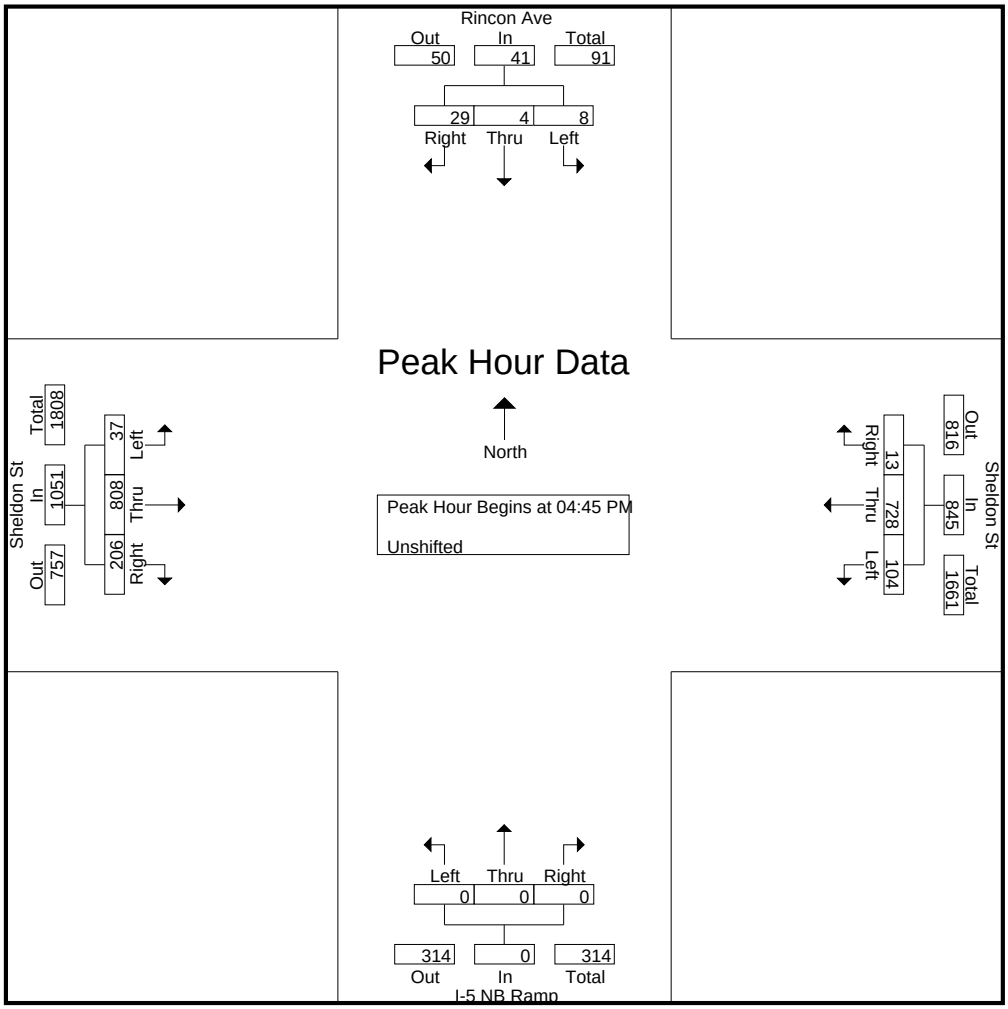

CITY TRAFFIC COUNTERS

626.991.7522

www.ctcounters.com

File Name : 5NBRinSheldon_MC
Site Code : 00000000
Start Date : 1/15/2014
Page No : 1

Groups Printed- Bank 2

	Rincon Ave Southbound			Sheldon St Westbound			I-5 NB Ramp Northbound			Sheldon St Eastbound			
Start Time	Left	Thru	Right	Left	Thru	Right	Left	Thru	Right	Left	Thru	Right	Int. Total
07:00 AM	0	0	0	1	1	0	0	0	0	0	1	0	3
07:15 AM	0	0	0	0	1	0	0	0	0	0	1	0	2
07:30 AM	0	0	0	0	0	0	0	0	0	0	1	0	1
07:45 AM	0	0	0	0	0	0	0	0	0	0	2	0	2
Total	0	0	0	1	2	0	0	0	0	0	5	0	8
08:15 AM	0	0	0	0	3	0	0	0	0	0	1	0	4
Total	0	0	0	0	3	0	0	0	0	0	1	0	4
09:15 AM	0	0	0	0	0	0	0	0	0	0	1	0	1
09:30 AM	0	0	0	0	1	0	0	0	0	0	0	0	1
09:45 AM	0	0	0	0	3	0	0	0	0	0	0	0	3
Total	0	0	0	0	4	0	0	0	0	0	1	0	5
12:00 PM	0	0	0	0	1	0	0	0	0	0	0	0	1
Total	0	0	0	0	1	0	0	0	0	0	0	0	1
01:00 PM	0	0	0	0	0	0	0	0	0	0	1	0	1
01:45 PM	0	0	0	1	2	0	0	0	0	0	0	0	3
Total	0	0	0	1	2	0	0	0	0	0	1	0	4
03:00 PM	0	0	0	1	0	0	0	0	0	0	0	0	1
03:15 PM	0	0	0	0	1	0	0	0	0	0	1	0	2
Total	0	0	0	1	1	0	0	0	0	0	1	0	3
04:00 PM	0	0	0	1	1	0	0	0	0	0	1	0	3
04:15 PM	0	0	0	0	0	0	0	0	0	0	2	0	2
04:30 PM	0	0	0	0	0	0	0	0	0	0	1	0	1
04:45 PM	0	0	0	0	1	0	0	0	0	0	1	0	2
Total	0	0	0	1	2	0	0	0	0	0	5	0	8
05:00 PM	0	0	0	3	1	0	0	0	0	0	2	0	6
05:45 PM	0	0	0	0	3	0	0	0	0	0	0	0	3
Total	0	0	0	3	4	0	0	0	0	0	2	0	9
Grand Total	0	0	0	7	19	0	0	0	0	0	16	0	42
Apprch %	0	0	0	26.9	73.1	0	0	0	0	0	100	0	
Total %	0	0	0	16.7	45.2	0	0	0	0	0	38.1	0	

CITY TRAFFIC COUNTERS

626.991.7522

www.ctcounters.com

File Name : 5NBRinSheldon_MC
Site Code : 00000000
Start Date : 1/15/2014
Page No : 2

	Rincon Ave Southbound				Sheldon St Westbound				I-5 NB Ramp Northbound				Sheldon St Eastbound				
Start Time	Left	Thru	Right	App. Total	Left	Thru	Right	App. Total	Left	Thru	Right	App. Total	Left	Thru	Right	App. Total	Int. Total
Peak Hour Analysis From 07:00 AM to 09:45 AM - Peak 1 of 1																	
Peak Hour for Entire Intersection Begins at 07:00 AM																	
07:00 AM	0	0	0	0	**1**	**1**	0	**2**	0	0	0	0	0	1	0	1	**3**
07:15 AM	0	0	0	0	0	1	0	1	0	0	0	0	0	1	0	1	2
07:30 AM	0	0	0	0	0	0	0	0	0	0	0	0	0	1	0	1	1
07:45 AM	0	0	0	0	0	0	0	0	0	0	0	0	0	**2**	0	**2**	2
Total Volume	0	0	0	0	1	2	0	3	0	0	0	0	0	5	0	5	8
% App. Total	0	0	0		33.3	66.7	0		0	0	0		0	100	0		
PHF	.000	.000	.000	.000	.250	.500	.000	.375	.000	.000	.000	.000	.000	.625	.000	.625	.667

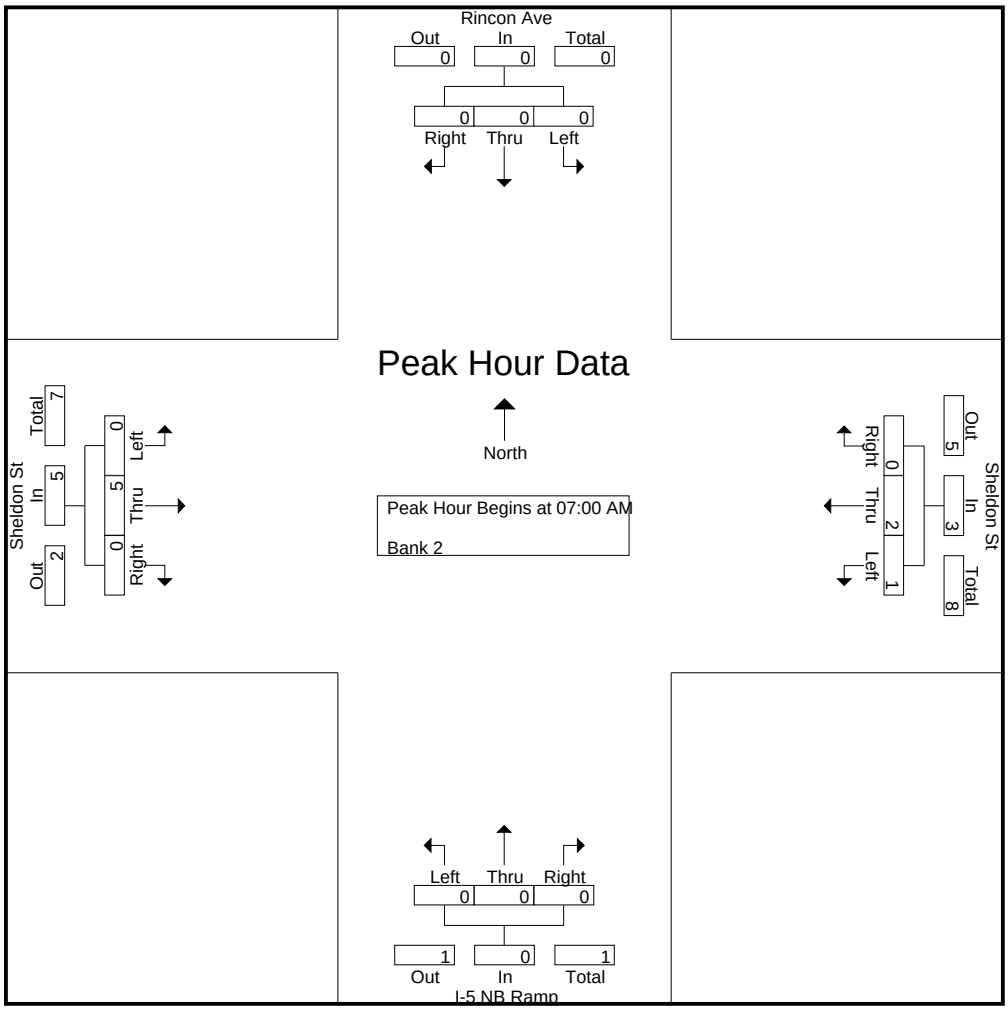

CITY TRAFFIC COUNTERS

626.991.7522

www.ctcounters.com

File Name : 5NBRinSheldon_MC
Site Code : 00000000
Start Date : 1/15/2014
Page No : 3

	Rincon Ave Southbound				Sheldon St Westbound				I-5 NB Ramp Northbound				Sheldon St Eastbound				
Start Time	Left	Thru	Right	App. Total	Left	Thru	Right	App. Total	Left	Thru	Right	App. Total	Left	Thru	Right	App. Total	Int. Total
Peak Hour Analysis From 10:00 AM to 01:45 PM - Peak 1 of 1																	
Peak Hour for Entire Intersection Begins at 01:00 PM																	
01:00 PM	0	0	0	0	0	0	0	0	0	0	0	0	0	**1**	0	**1**	1
01:15 PM	0	0	0	0	0	0	0	0	0	0	0	0	0	0	0	0	0
01:30 PM	0	0	0	0	0	0	0	0	0	0	0	0	0	0	0	0	0
01:45 PM	0	0	0	0	**1**	**2**	0	**3**	0	0	0	0	0	0	0	0	**3**
Total Volume	0	0	0	0	1	2	0	3	0	0	0	0	0	1	0	1	4
% App. Total	0	0	0		33.3	66.7	0		0	0	0		0	100	0		
PHF	.000	.000	.000	.000	.250	.250	.000	.250	.000	.000	.000	.000	.000	.250	.000	.250	.333

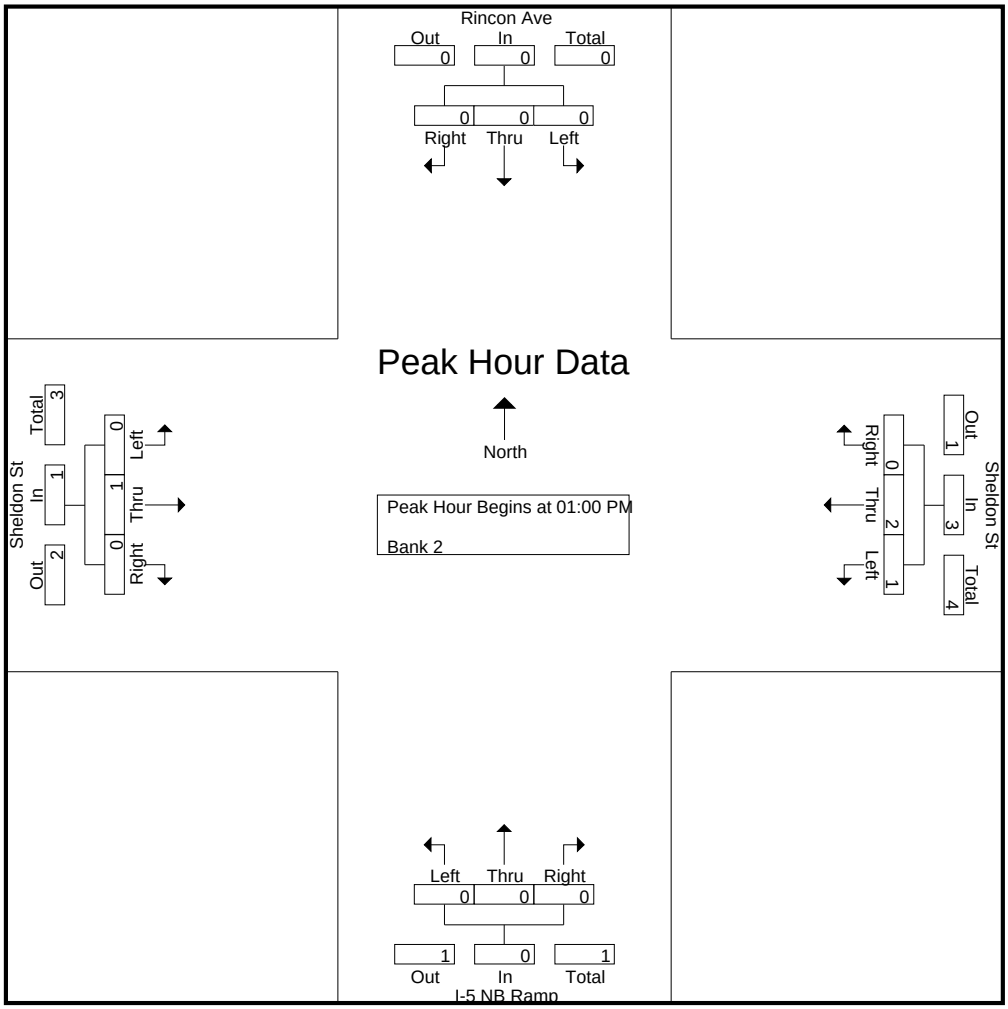

CITY TRAFFIC COUNTERS

626.991.7522

www.ctcounters.com

File Name : 5NBRinSheldon_MC
Site Code : 00000000
Start Date : 1/15/2014
Page No : 4

	Rincon Ave Southbound				Sheldon St Westbound				I-5 NB Ramp Northbound				Sheldon St Eastbound				
Start Time	Left	Thru	Right	App. Total	Left	Thru	Right	App. Total	Left	Thru	Right	App. Total	Left	Thru	Right	App. Total	Int. Total
Peak Hour Analysis From 02:00 PM to 05:45 PM - Peak 1 of 1																	
Peak Hour for Entire Intersection Begins at 04:15 PM																	
04:15 PM	0	0	0	0	0	0	0	0	0	0	0	0	0	**2**	0	**2**	2
04:30 PM	0	0	0	0	0	0	0	0	0	0	0	0	0	1	0	1	1
04:45 PM	0	0	0	0	0	**1**	0	1	0	0	0	0	0	1	0	1	2
05:00 PM	0	0	0	0	**3**	1	0	**4**	0	0	0	0	0	2	0	2	**6**
Total Volume	0	0	0	0	3	2	0	5	0	0	0	0	0	6	0	6	11
% App. Total	0	0	0		60	40	0		0	0	0		0	100	0		
PHF	.000	.000	.000	.000	.250	.500	.000	.313	.000	.000	.000	.000	.000	.750	.000	.750	.458

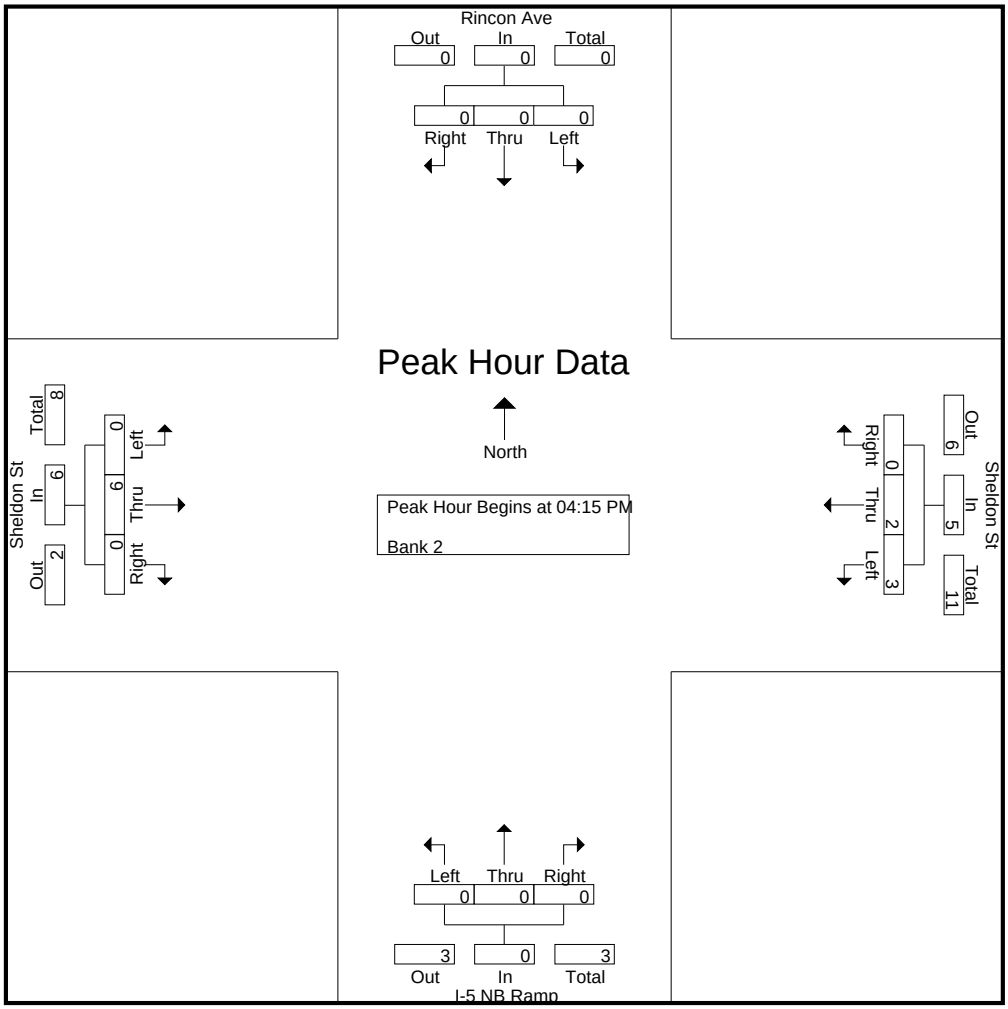

CITY TRAFFIC COUNTERS

626.991.7522

www.ctcounters.com

File Name : 5NBRinSheldon_Bus
Site Code : 00000000
Start Date : 1/15/2014
Page No : 1

Groups Printed- Bank 1

	Rincon Ave Southbound			Sheldon St Westbound			I-5 NB Ramp Northbound			Sheldon St Eastbound			
Start Time	Left	Thru	Right	Left	Thru	Right	Left	Thru	Right	Left	Thru	Right	Int. Total
07:00 AM	0	0	0	0	2	0	0	0	0	0	3	0	5
07:15 AM	0	0	0	0	0	0	0	0	0	0	3	0	3
07:45 AM	0	0	0	0	2	0	0	0	0	0	1	0	3
Total	0	0	0	0	4	0	0	0	0	0	7	0	11
08:00 AM	0	0	0	0	0	0	0	0	0	0	1	0	1
08:15 AM	0	0	0	0	0	0	0	0	0	0	1	0	1
08:30 AM	0	0	0	0	1	0	0	0	0	0	3	0	4
08:45 AM	0	0	0	0	1	0	0	0	0	0	2	0	3
Total	0	0	0	0	2	0	0	0	0	0	7	0	9
09:00 AM	0	0	0	0	1	0	0	0	0	0	2	0	3
09:15 AM	0	0	0	0	0	0	0	0	0	0	1	0	1
09:30 AM	0	0	0	0	0	0	0	0	0	0	1	1	2
Total	0	0	0	0	1	0	0	0	0	0	4	1	6
12:00 PM	0	0	0	0	2	0	0	0	0	0	1	0	3
12:15 PM	0	0	0	0	1	0	0	0	0	0	0	0	1
Total	0	0	0	0	3	0	0	0	0	0	1	0	4
01:00 PM	0	0	0	0	1	0	0	0	0	0	1	0	2
01:15 PM	0	0	0	0	1	0	0	0	0	0	3	0	4
01:30 PM	0	0	0	0	1	0	0	0	0	0	3	0	4
01:45 PM	0	0	0	0	0	0	0	0	0	0	3	0	3
Total	0	0	0	0	3	0	0	0	0	0	10	0	13
03:00 PM	0	0	0	0	3	0	0	0	0	0	0	1	4
03:15 PM	0	0	0	0	1	0	0	0	0	0	1	0	2
03:30 PM	0	0	0	0	2	0	0	0	0	0	1	0	3
03:45 PM	0	0	0	0	2	0	0	0	0	0	1	0	3
Total	0	0	0	0	8	0	0	0	0	0	3	1	12
04:00 PM	0	0	0	0	1	0	0	0	0	0	5	0	6
04:15 PM	0	0	0	0	1	0	0	0	0	0	2	0	3
04:30 PM	0	0	0	0	0	0	0	0	0	0	1	0	1
04:45 PM	0	0	0	0	0	0	0	0	0	0	2	0	2
Total	0	0	0	0	2	0	0	0	0	0	10	0	12
05:30 PM	0	0	0	0	0	0	0	0	0	0	1	0	1
05:45 PM	0	0	0	0	0	0	0	0	0	0	1	0	1
Total	0	0	0	0	0	0	0	0	0	0	2	0	2
Grand Total	0	0	0	0	23	0	0	0	0	0	44	2	69
Apprch %	0	0	0	0	100	0	0	0	0	0	95.7	4.3	
Total %	0	0	0	0	33.3	0	0	0	0	0	63.8	2.9	

CITY TRAFFIC COUNTERS

626.991.7522

www.ctcounters.com

File Name : 5NBRinSheldon_Bus
Site Code : 00000000
Start Date : 1/15/2014
Page No : 2

	Rincon Ave Southbound				Sheldon St Westbound				I-5 NB Ramp Northbound				Sheldon St Eastbound				
Start Time	Left	Thru	Right	App. Total	Left	Thru	Right	App. Total	Left	Thru	Right	App. Total	Left	Thru	Right	App. Total	Int. Total
Peak Hour Analysis From 07:00 AM to 09:45 AM - Peak 1 of 1																	
Peak Hour for Entire Intersection Begins at 07:00 AM																	
07:00 AM	0	0	0	0	0	**2**	0	**2**	0	0	0	0	0	**3**	0	**3**	**5**
07:15 AM	0	0	0	0	0	0	0	0	0	0	0	0	0	3	0	3	3
07:30 AM	0	0	0	0	0	0	0	0	0	0	0	0	0	0	0	0	0
07:45 AM	0	0	0	0	0	2	0	2	0	0	0	0	0	1	0	1	3
Total Volume	0	0	0	0	0	4	0	4	0	0	0	0	0	7	0	7	11
% App. Total	0	0	0		0	100	0		0	0	0		0	100	0		
PHF	.000	.000	.000	.000	.000	.500	.000	.500	.000	.000	.000	.000	.000	.583	.000	.583	.550

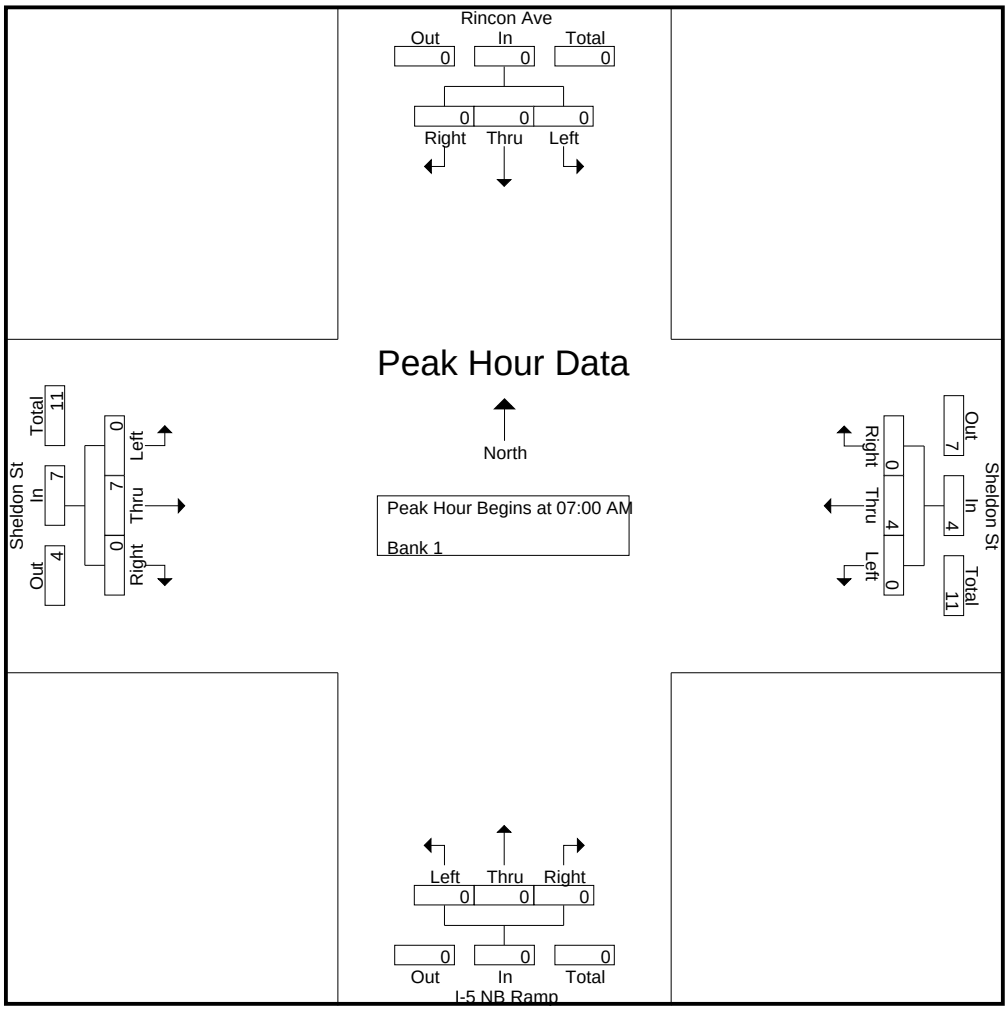

CITY TRAFFIC COUNTERS

626.991.7522

www.ctcounters.com

File Name : 5NBRinSheldon_Bus
Site Code : 00000000
Start Date : 1/15/2014
Page No : 3

	Rincon Ave Southbound				Sheldon St Westbound				I-5 NB Ramp Northbound				Sheldon St Eastbound				
Start Time	Left	Thru	Right	App. Total	Left	Thru	Right	App. Total	Left	Thru	Right	App. Total	Left	Thru	Right	App. Total	Int. Total
Peak Hour Analysis From 10:00 AM to 01:45 PM - Peak 1 of 1																	
Peak Hour for Entire Intersection Begins at 01:00 PM																	
01:00 PM	0	0	0	0	0	**1**	0	**1**	0	0	0	0	0	1	0	1	2
01:15 PM	0	0	0	0	0	1	0	1	0	0	0	0	0	**3**	0	**3**	**4**
01:30 PM	0	0	0	0	0	1	0	1	0	0	0	0	0	3	0	3	4
01:45 PM	0	0	0	0	0	0	0	0	0	0	0	0	0	3	0	3	3
Total Volume	0	0	0	0	0	3	0	3	0	0	0	0	0	10	0	10	13
% App. Total	0	0	0		0	100	0		0	0	0		0	100	0		
PHF	.000	.000	.000	.000	.000	.750	.000	.750	.000	.000	.000	.000	.000	.833	.000	.833	.813

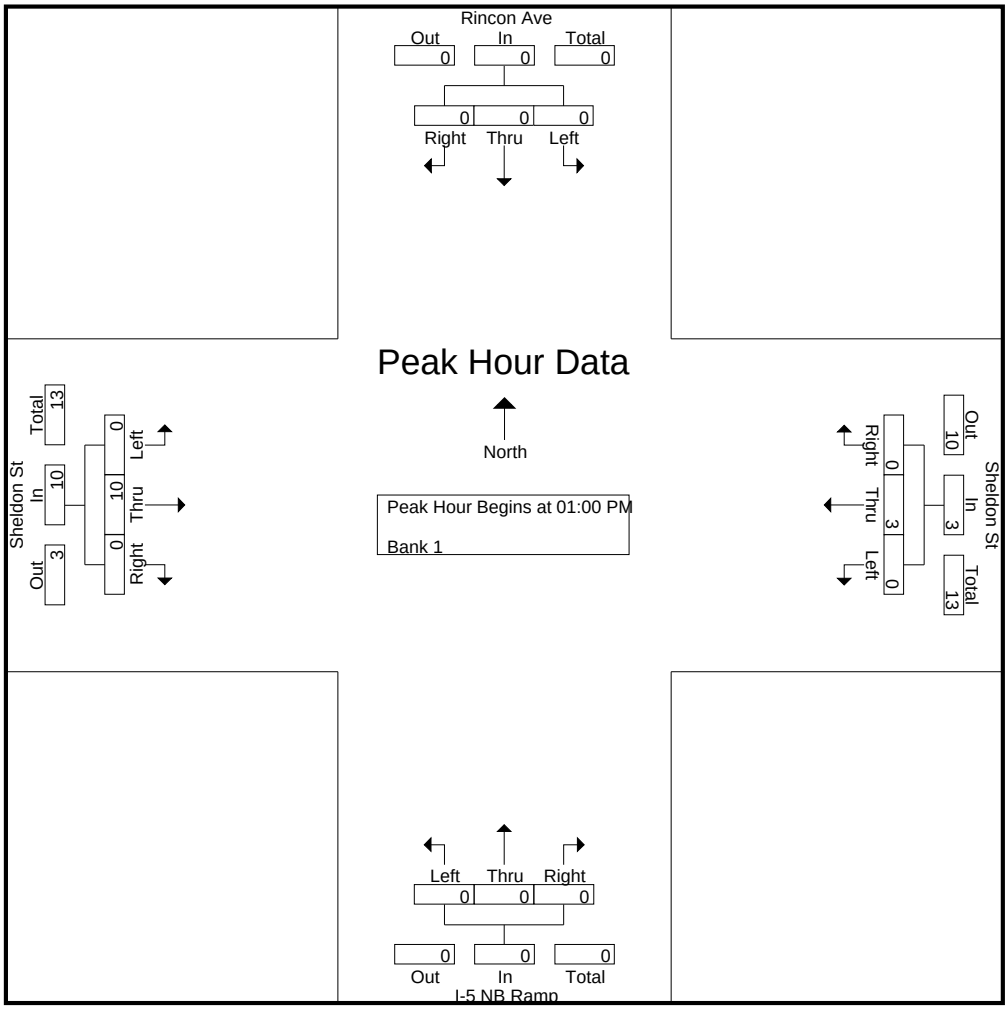

CITY TRAFFIC COUNTERS

626.991.7522

www.ctcounters.com

File Name : 5NBRinSheldon_Bus
Site Code : 00000000
Start Date : 1/15/2014
Page No : 4

	Rincon Ave Southbound				Sheldon St Westbound				I-5 NB Ramp Northbound				Sheldon St Eastbound				
Start Time	Left	Thru	Right	App. Total	Left	Thru	Right	App. Total	Left	Thru	Right	App. Total	Left	Thru	Right	App. Total	Int. Total
Peak Hour Analysis From 02:00 PM to 05:45 PM - Peak 1 of 1																	
Peak Hour for Entire Intersection Begins at 03:30 PM																	
03:30 PM	0	0	0	0	0	**2**	0	**2**	0	0	0	0	0	1	0	1	3
03:45 PM	0	0	0	0	0	2	0	2	0	0	0	0	0	1	0	1	3
04:00 PM	0	0	0	0	0	1	0	1	0	0	0	0	0	**5**	0	**5**	**6**
04:15 PM	0	0	0	0	0	1	0	1	0	0	0	0	0	2	0	2	3
Total Volume	0	0	0	0	0	6	0	6	0	0	0	0	0	9	0	9	15
% App. Total	0	0	0		0	100	0		0	0	0		0	100	0		
PHF	.000	.000	.000	.000	.000	.750	.000	.750	.000	.000	.000	.000	.000	.450	.000	.450	.625

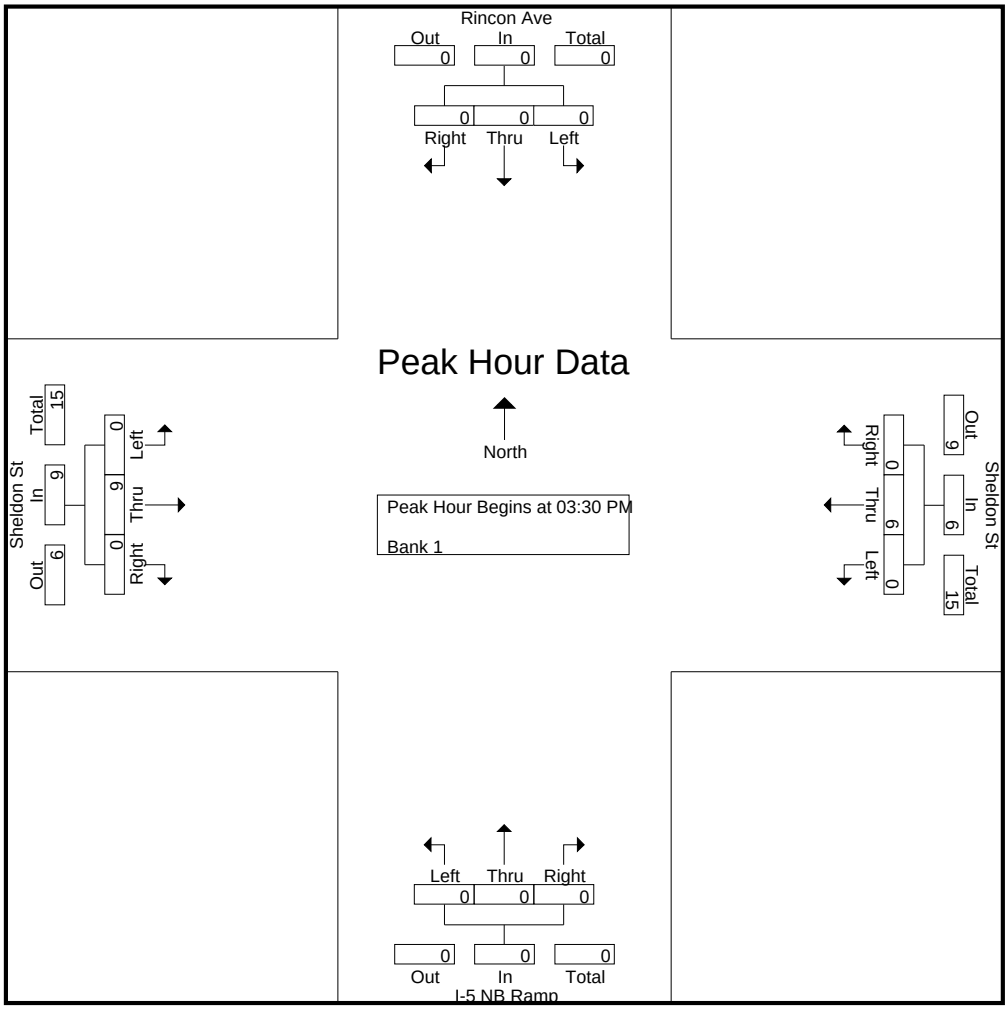

CITY TRAFFIC COUNTERS

626.991.7522

www.ctcounters.com

File Name : 5NBRinSheldon_2Axle
Site Code : 00000000
Start Date : 1/15/2014
Page No : 1

Groups Printed- Bank 1

	Rincon Ave Southbound			Sheldon St Westbound			I-5 NB Ramp Northbound			Sheldon St Eastbound			
Start Time	Left	Thru	Right	Left	Thru	Right	Left	Thru	Right	Left	Thru	Right	Int. Total
07:00 AM	0	0	1	1	3	1	0	0	0	0	7	1	14
07:15 AM	0	0	1	3	3	0	0	0	0	0	4	2	13
07:30 AM	0	0	0	1	2	0	0	0	0	0	6	0	9
07:45 AM	0	0	0	6	3	0	0	0	0	0	5	0	14
Total	0	0	2	11	11	1	0	0	0	0	22	3	50
08:00 AM	0	0	0	1	3	0	0	0	0	0	6	3	13
08:15 AM	0	1	0	3	7	2	0	0	0	0	8	0	21
08:30 AM	0	2	0	3	4	0	0	0	0	0	6	0	15
08:45 AM	0	0	0	4	6	0	0	0	0	0	7	0	17
Total	0	3	0	11	20	2	0	0	0	0	27	3	66
09:00 AM	0	0	0	6	6	0	0	0	0	0	6	1	19
09:15 AM	0	0	0	4	6	0	0	0	0	0	12	0	22
09:30 AM	0	0	0	3	6	0	0	0	0	0	9	0	18
09:45 AM	0	0	0	0	3	0	0	0	0	0	6	0	9
Total	0	0	0	13	21	0	0	0	0	0	33	1	68
12:00 PM	0	0	0	3	2	0	0	0	0	0	4	2	11
12:15 PM	1	0	0	1	4	0	0	0	0	0	3	2	11
12:30 PM	0	0	0	0	5	0	0	0	0	0	2	2	9
12:45 PM	1	0	0	1	4	0	0	0	0	1	5	0	12
Total	2	0	0	5	15	0	0	0	0	1	14	6	43
01:00 PM	0	0	0	0	4	0	0	0	0	0	5	1	10
01:15 PM	0	1	0	3	5	0	0	0	0	0	3	1	13
01:30 PM	0	0	0	4	5	0	0	0	0	0	4	2	15
01:45 PM	0	1	1	4	5	1	0	0	0	0	11	1	24
Total	0	2	1	11	19	1	0	0	0	0	23	5	62
03:00 PM	1	0	0	2	6	0	0	0	0	0	7	1	17
03:15 PM	0	0	0	0	8	0	0	0	0	1	10	1	20
03:30 PM	0	0	0	3	7	0	0	0	0	0	11	1	22
03:45 PM	0	0	0	1	3	0	0	0	0	0	10	3	17
Total	1	0	0	6	24	0	0	0	0	1	38	6	76
04:00 PM	0	0	0	0	3	0	0	0	0	0	7	1	11
04:15 PM	0	0	0	0	4	0	0	0	0	0	8	0	12
04:30 PM	0	0	0	0	2	0	0	0	0	0	4	0	6
04:45 PM	0	0	0	0	2	0	0	0	0	0	7	0	9
Total	0	0	0	0	11	0	0	0	0	0	26	1	38
05:00 PM	0	0	0	1	4	0	0	0	0	0	6	0	11
05:15 PM	0	0	0	0	4	0	0	0	0	1	7	1	13
05:30 PM	0	0	0	0	1	0	0	0	0	0	7	1	9
05:45 PM	0	0	0	0	2	0	0	0	0	1	5	1	9
Total	0	0	0	1	11	0	0	0	0	2	25	3	42
Grand Total	3	5	3	58	132	4	0	0	0	4	208	28	445
Apprch %	27.3	45.5	27.3	29.9	68	2.1	0	0	0	1.7	86.7	11.7	
Total %	0.7	1.1	0.7	13	29.7	0.9	0	0	0	0.9	46.7	6.3	

CITY TRAFFIC COUNTERS

626.991.7522

www.ctcounters.com

File Name : 5NBRinSheldon_2Axle
Site Code : 00000000
Start Date : 1/15/2014
Page No : 2

	Rincon Ave Southbound				Sheldon St Westbound				I-5 NB Ramp Northbound				Sheldon St Eastbound				
Start Time	Left	Thru	Right	App. Total	Left	Thru	Right	App. Total	Left	Thru	Right	App. Total	Left	Thru	Right	App. Total	Int. Total
Peak Hour Analysis From 07:00 AM to 09:45 AM - Peak 1 of 1																	
Peak Hour for Entire Intersection Begins at 08:45 AM																	
08:45 AM	0	0	0	0	4	**6**	0	10	0	0	0	0	0	7	0	7	17
09:00 AM	0	0	0	0	**6**	6	0	**12**	0	0	0	0	0	6	**1**	7	19
09:15 AM	0	0	0	0	4	6	0	10	0	0	0	0	0	**12**	0	**12**	**22**
09:30 AM	0	0	0	0	3	6	0	9	0	0	0	0	0	9	0	9	18
Total Volume	0	0	0	0	17	24	0	41	0	0	0	0	0	34	1	35	76
% App. Total	0	0	0		41.5	58.5	0		0	0	0		0	97.1	2.9		
PHF	.000	.000	.000	.000	.708	1.00	.000	.854	.000	.000	.000	.000	.000	.708	.250	.729	.864

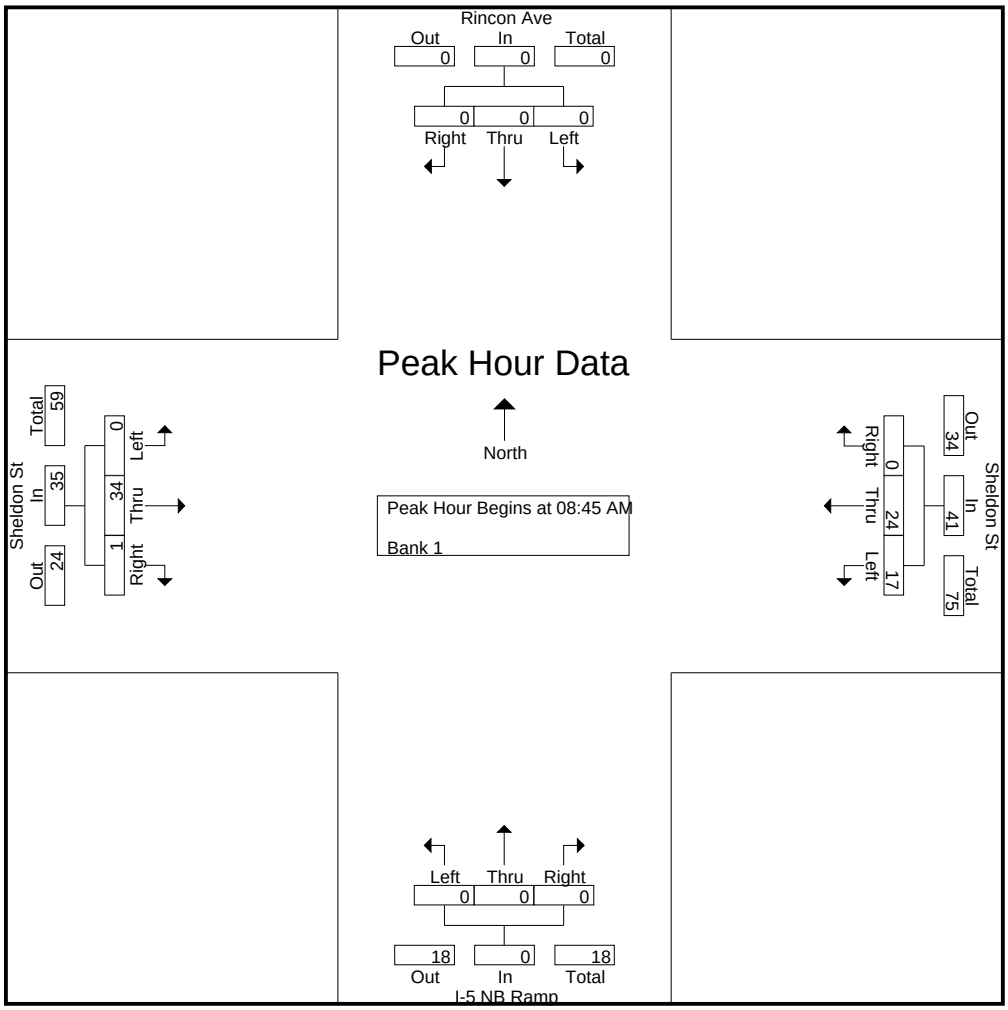

CITY TRAFFIC COUNTERS

626.991.7522

www.ctcounters.com

File Name : 5NBRinSheldon_2Axle
Site Code : 00000000
Start Date : 1/15/2014
Page No : 3

	Rincon Ave Southbound				Sheldon St Westbound				I-5 NB Ramp Northbound				Sheldon St Eastbound				
Start Time	Left	Thru	Right	App. Total	Left	Thru	Right	App. Total	Left	Thru	Right	App. Total	Left	Thru	Right	App. Total	Int. Total
Peak Hour Analysis From 10:00 AM to 01:45 PM - Peak 1 of 1																	
Peak Hour for Entire Intersection Begins at 01:00 PM																	
01:00 PM	0	0	0	0	0	4	0	4	0	0	0	0	0	5	1	6	10
01:15 PM	0	**1**	0	1	3	**5**	0	8	0	0	0	0	0	3	1	4	13
01:30 PM	0	0	0	0	**4**	5	0	9	0	0	0	0	0	4	**2**	6	15
01:45 PM	0	1	**1**	**2**	4	5	**1**	**10**	0	0	0	0	0	**11**	1	**12**	**24**
Total Volume	0	2	1	3	11	19	1	31	0	0	0	0	0	23	5	28	62
% App. Total	0	66.7	33.3		35.5	61.3	3.2		0	0	0		0	82.1	17.9		
PHF	.000	.500	.250	.375	.688	.950	.250	.775	.000	.000	.000	.000	.000	.523	.625	.583	.646

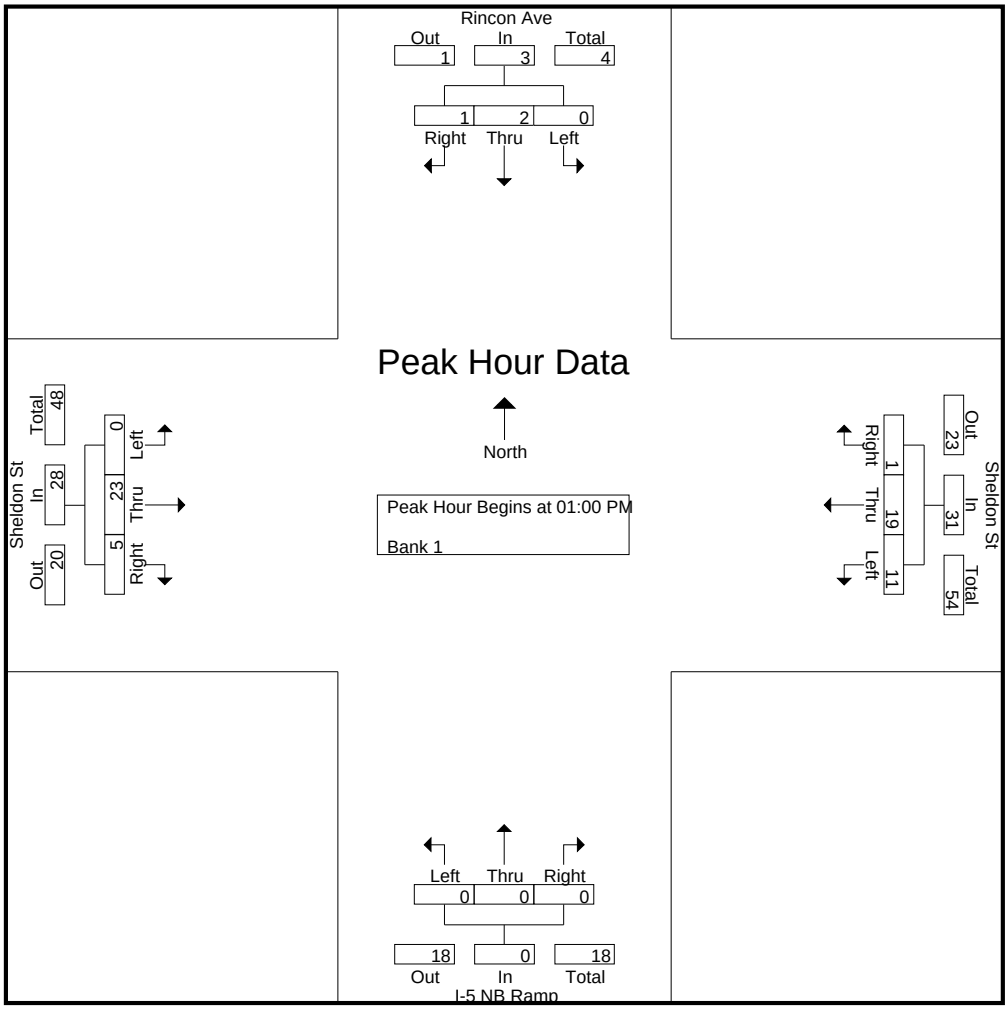

CITY TRAFFIC COUNTERS

626.991.7522

www.ctcounters.com

File Name : 5NBRinSheldon_2Axle
Site Code : 00000000
Start Date : 1/15/2014
Page No : 4

	Rincon Ave Southbound				Sheldon St Westbound				I-5 NB Ramp Northbound				Sheldon St Eastbound				
Start Time	Left	Thru	Right	App. Total	Left	Thru	Right	App. Total	Left	Thru	Right	App. Total	Left	Thru	Right	App. Total	Int. Total
Peak Hour Analysis From 02:00 PM to 05:45 PM - Peak 1 of 1																	
Peak Hour for Entire Intersection Begins at 03:00 PM																	
03:00 PM	**1**	0	0	**1**	2	6	0	8	0	0	0	0	0	7	1	8	17
03:15 PM	0	0	0	0	0	**8**	0	8	0	0	0	0	**1**	10	1	12	20
03:30 PM	0	0	0	0	**3**	7	0	**10**	0	0	0	0	0	**11**	1	12	**22**
03:45 PM	0	0	0	0	1	3	0	4	0	0	0	0	0	10	**3**	**13**	17
Total Volume	1	0	0	1	6	24	0	30	0	0	0	0	1	38	6	45	76
% App. Total	100	0	0		20	80	0		0	0	0		2.2	84.4	13.3		
PHF	.250	.000	.000	.250	.500	.750	.000	.750	.000	.000	.000	.000	.250	.864	.500	.865	.864

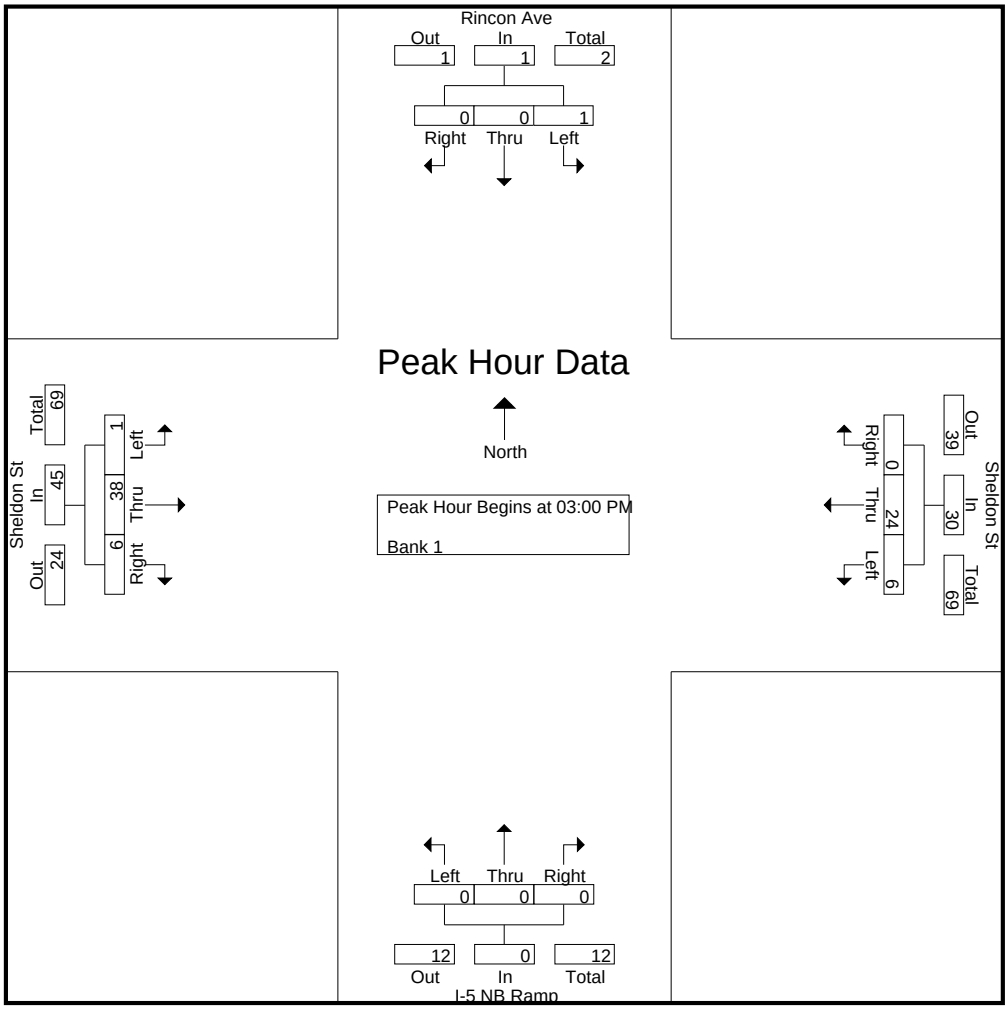

CITY TRAFFIC COUNTERS

626.991.7522

www.ctcounters.com

File Name : 5NBRinSheldon_3Axle
Site Code : 00000000
Start Date : 1/15/2014
Page No : 1

Groups Printed- Bank 2

	Rincon Ave Southbound			Sheldon St Westbound			I-5 NB Ramp Northbound			Sheldon St Eastbound			
Start Time	Left	Thru	Right	Left	Thru	Right	Left	Thru	Right	Left	Thru	Right	Int. Total
07:00 AM	0	0	0	0	5	0	0	0	0	0	0	0	5
07:15 AM	0	0	0	1	2	0	0	0	0	0	1	0	4
07:30 AM	0	0	0	0	0	0	0	0	0	0	3	2	5
07:45 AM	0	0	0	1	1	0	0	0	0	1	1	0	4
Total	0	0	0	2	8	0	0	0	0	1	5	2	18
08:00 AM	0	0	0	0	4	0	0	0	0	0	4	1	9
08:15 AM	0	0	0	1	1	0	0	0	0	0	4	0	6
08:30 AM	0	0	0	1	2	0	0	0	0	0	5	0	8
08:45 AM	0	0	0	1	3	0	0	0	0	0	2	0	6
Total	0	0	0	3	10	0	0	0	0	0	15	1	29
09:00 AM	0	0	0	2	5	0	0	0	0	0	5	0	12
09:15 AM	0	0	0	4	2	0	0	0	0	0	6	0	12
09:30 AM	0	0	0	0	6	1	0	0	0	0	2	0	9
09:45 AM	0	0	0	3	3	0	0	0	0	0	4	0	10
Total	0	0	0	9	16	1	0	0	0	0	17	0	43
12:00 PM	0	1	0	2	2	0	0	0	0	0	4	0	9
12:15 PM	0	0	0	1	3	0	0	0	0	0	3	0	7
12:30 PM	0	0	0	1	2	0	0	0	0	0	2	0	5
12:45 PM	0	0	0	3	0	0	0	0	0	0	3	0	6
Total	0	1	0	7	7	0	0	0	0	0	12	0	27
01:00 PM	0	0	0	3	1	0	0	0	0	0	2	0	6
01:15 PM	0	0	0	3	2	0	0	0	0	0	3	3	11
01:30 PM	0	0	0	2	1	0	0	0	0	0	3	2	8
01:45 PM	0	1	0	5	0	0	0	0	0	1	2	2	11
Total	0	1	0	13	4	0	0	0	0	1	10	7	36
03:00 PM	0	0	0	1	1	0	0	0	0	0	5	0	7
03:15 PM	0	0	0	2	0	0	0	0	0	0	4	0	6
03:30 PM	0	0	0	1	1	0	0	0	0	1	1	0	4
03:45 PM	0	0	0	1	0	0	0	0	0	0	3	0	4
Total	0	0	0	5	2	0	0	0	0	1	13	0	21
04:00 PM	0	0	0	0	0	0	0	0	0	0	4	0	4
04:15 PM	0	0	0	0	1	0	0	0	0	0	4	0	5
04:30 PM	0	0	0	1	0	0	0	0	0	0	2	0	3
04:45 PM	0	0	0	1	0	0	0	0	0	0	3	0	4
Total	0	0	0	2	1	0	0	0	0	0	13	0	16
05:00 PM	0	0	0	0	0	0	0	0	0	0	6	0	6
05:15 PM	0	0	0	0	0	0	0	0	0	0	3	0	3
05:30 PM	0	0	0	0	0	0	0	0	0	0	2	0	2
05:45 PM	0	0	0	0	0	0	0	0	0	0	1	1	2
Total	0	0	0	0	0	0	0	0	0	0	12	1	13
Grand Total	0	2	0	41	48	1	0	0	0	3	97	11	203
Apprch %	0	100	0	45.6	53.3	1.1	0	0	0	2.7	87.4	9.9	
Total %	0	1	0	20.2	23.6	0.5	0	0	0	1.5	47.8	5.4	

CITY TRAFFIC COUNTERS

626.991.7522

www.ctcounters.com

File Name : 5NBRinSheldon_3Axle
Site Code : 00000000
Start Date : 1/15/2014
Page No : 2

	Rincon Ave Southbound				Sheldon St Westbound				I-5 NB Ramp Northbound				Sheldon St Eastbound				
Start Time	Left	Thru	Right	App. Total	Left	Thru	Right	App. Total	Left	Thru	Right	App. Total	Left	Thru	Right	App. Total	Int. Total
Peak Hour Analysis From 07:00 AM to 09:45 AM - Peak 1 of 1																	
Peak Hour for Entire Intersection Begins at 09:00 AM																	
09:00 AM	0	0	0	0	2	5	0	**7**	0	0	0	0	0	5	0	5	**12**
09:15 AM	0	0	0	0	**4**	2	0	6	0	0	0	0	0	**6**	0	**6**	12
09:30 AM	0	0	0	0	0	**6**	**1**	7	0	0	0	0	0	2	0	2	9
09:45 AM	0	0	0	0	3	3	0	6	0	0	0	0	0	4	0	4	10
Total Volume	0	0	0	0	9	16	1	26	0	0	0	0	0	17	0	17	43
% App. Total	0	0	0		34.6	61.5	3.8		0	0	0		0	100	0		
PHF	.000	.000	.000	.000	.563	.667	.250	.929	.000	.000	.000	.000	.000	.708	.000	.708	.896

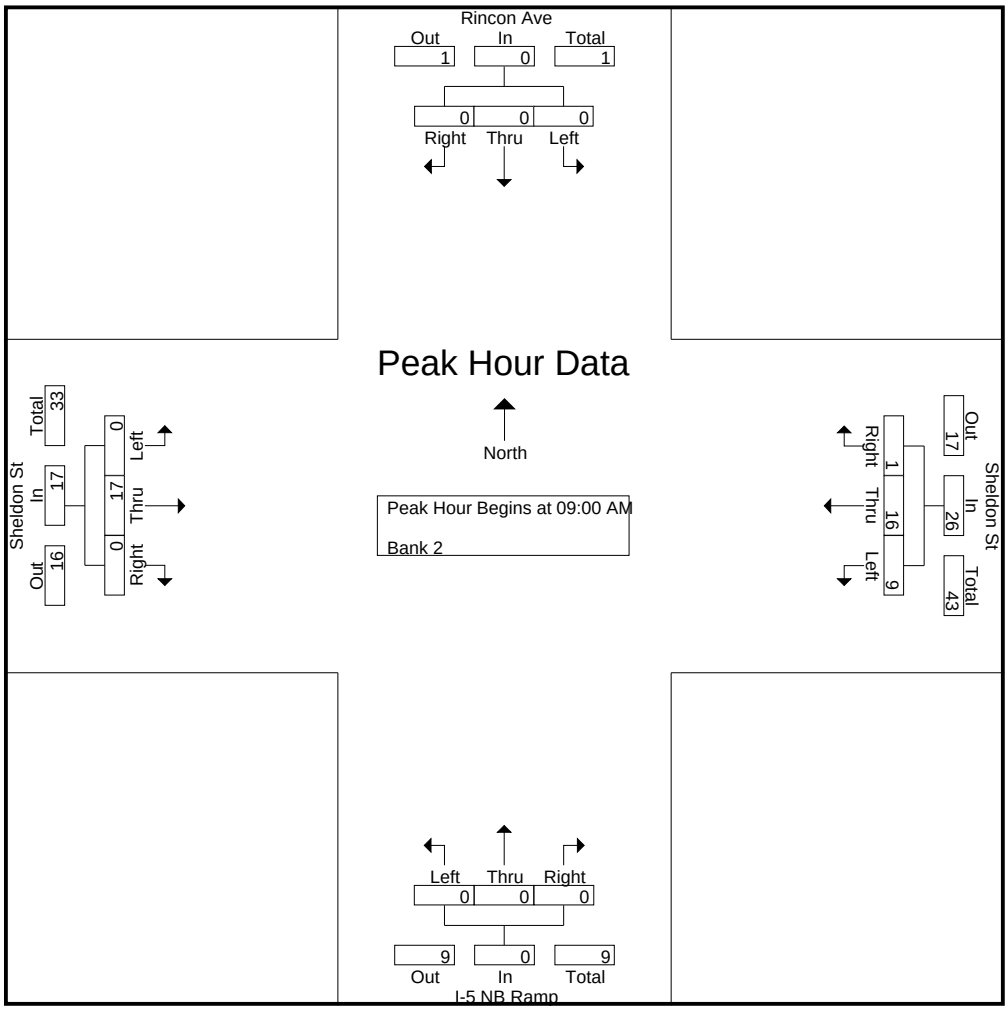

CITY TRAFFIC COUNTERS

626.991.7522

www.ctcounters.com

File Name : 5NBRinSheldon_3Axle
Site Code : 00000000
Start Date : 1/15/2014
Page No : 3

	Rincon Ave Southbound				Sheldon St Westbound				I-5 NB Ramp Northbound				Sheldon St Eastbound				
Start Time	Left	Thru	Right	App. Total	Left	Thru	Right	App. Total	Left	Thru	Right	App. Total	Left	Thru	Right	App. Total	Int. Total
Peak Hour Analysis From 10:00 AM to 01:45 PM - Peak 1 of 1																	
Peak Hour for Entire Intersection Begins at 01:00 PM																	
01:00 PM	0	0	0	0	3	1	0	4	0	0	0	0	0	2	0	2	6
01:15 PM	0	0	0	0	3	**2**	0	**5**	0	0	0	0	0	**3**	**3**	**6**	**11**
01:30 PM	0	0	0	0	2	1	0	3	0	0	0	0	0	3	2	5	8
01:45 PM	0	**1**	0	**1**	**5**	0	0	5	0	0	0	0	**1**	2	2	5	11
Total Volume	0	1	0	1	13	4	0	17	0	0	0	0	1	10	7	18	36
% App. Total	0	100	0		76.5	23.5	0		0	0	0		5.6	55.6	38.9		
PHF	.000	.250	.000	.250	.650	.500	.000	.850	.000	.000	.000	.000	.250	.833	.583	.750	.818

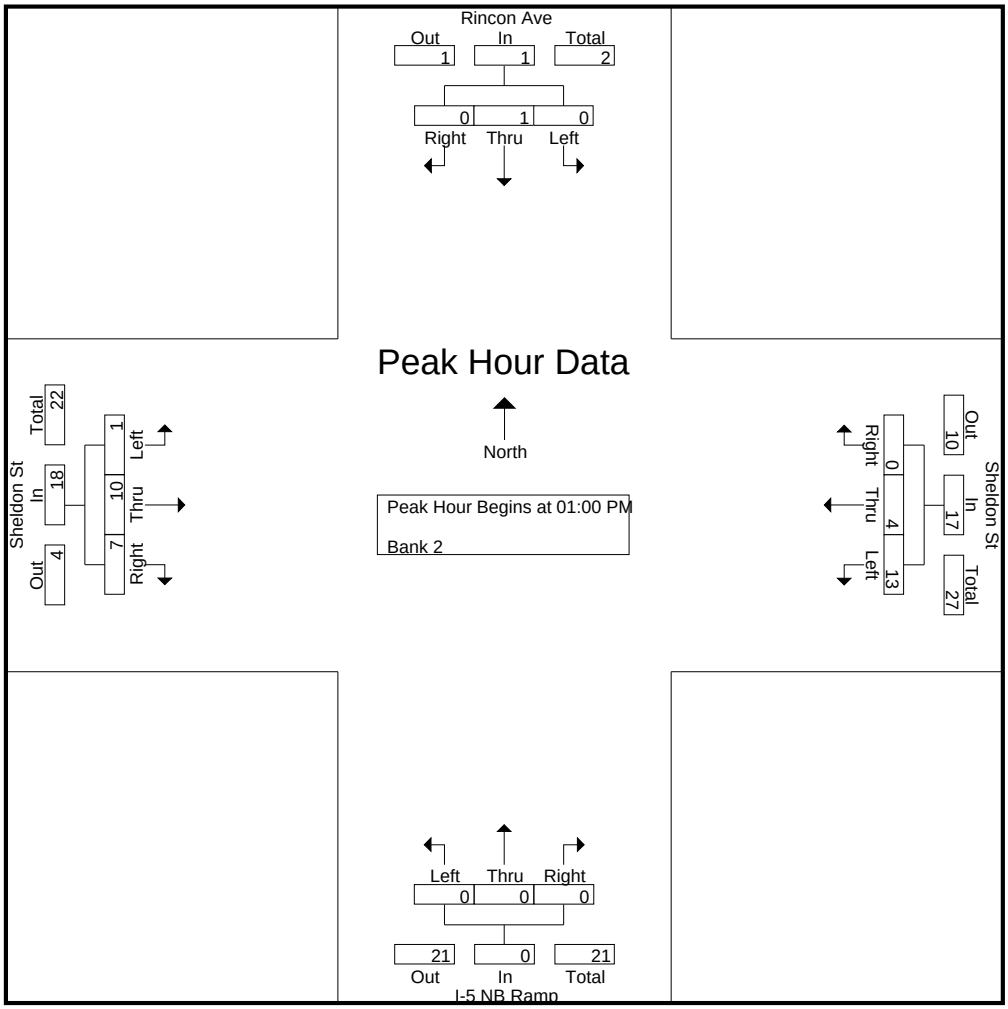

CITY TRAFFIC COUNTERS

626.991.7522

www.ctcounters.com

File Name : 5NBRinSheldon_3Axle
Site Code : 00000000
Start Date : 1/15/2014
Page No : 4

	Rincon Ave Southbound				Sheldon St Westbound				I-5 NB Ramp Northbound				Sheldon St Eastbound				
Start Time	Left	Thru	Right	App. Total	Left	Thru	Right	App. Total	Left	Thru	Right	App. Total	Left	Thru	Right	App. Total	Int. Total
Peak Hour Analysis From 02:00 PM to 05:45 PM - Peak 1 of 1																	
Peak Hour for Entire Intersection Begins at 03:00 PM																	
03:00 PM	0	0	0	0	1	**1**	0	**2**	0	0	0	0	0	**5**	0	**5**	**7**
03:15 PM	0	0	0	0	**2**	0	0	2	0	0	0	0	0	4	0	4	6
03:30 PM	0	0	0	0	1	1	0	2	0	0	0	0	**1**	1	0	2	4
03:45 PM	0	0	0	0	1	0	0	1	0	0	0	0	0	3	0	3	4
Total Volume	0	0	0	0	5	2	0	7	0	0	0	0	1	13	0	14	21
% App. Total	0	0	0		71.4	28.6	0		0	0	0		7.1	92.9	0		
PHF	.000	.000	.000	.000	.625	.500	.000	.875	.000	.000	.000	.000	.250	.650	.000	.700	.750

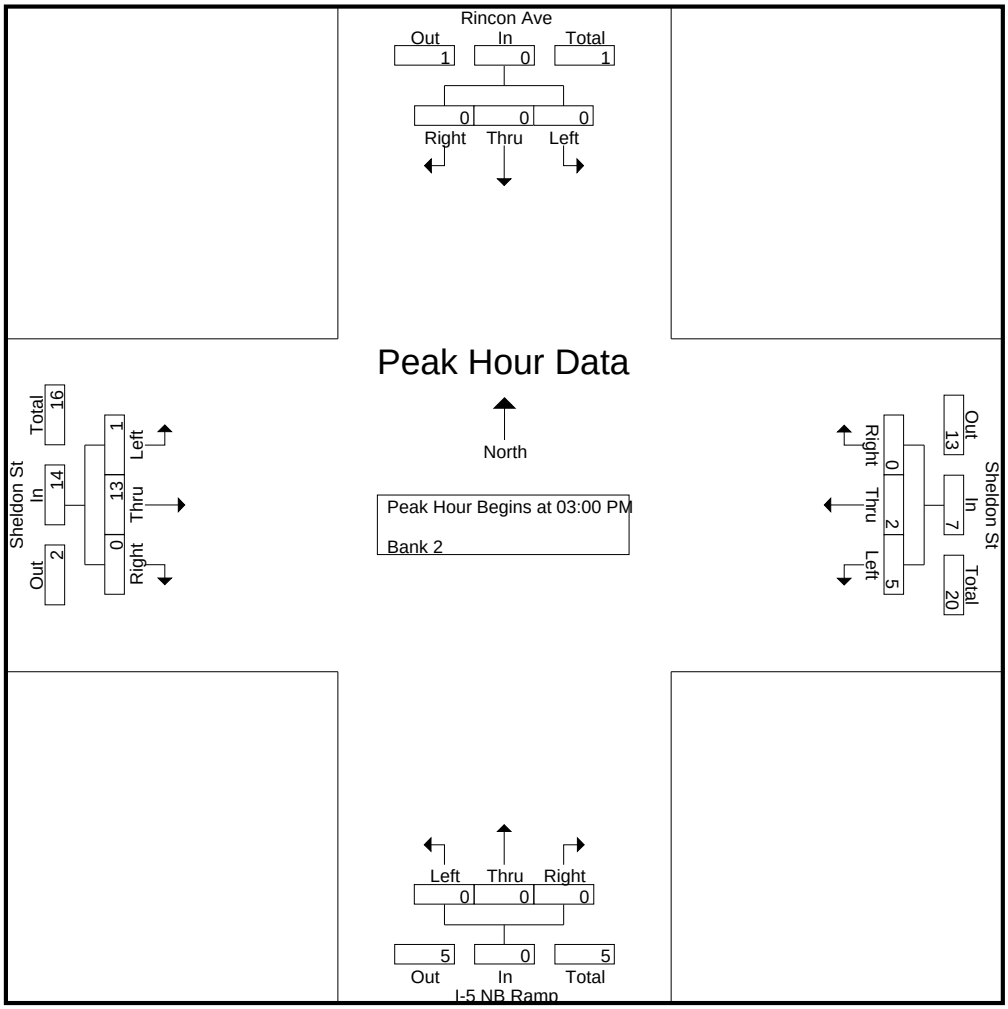

CITY TRAFFIC COUNTERS

626.991.7522

www.ctcounters.com

File Name : 5NBRinSheldon_4Axle
Site Code : 00000000
Start Date : 1/15/2014
Page No : 1

Groups Printed- Bank 2

	Rincon Ave Southbound			Sheldon St Westbound			I-5 NB Ramp Northbound			Sheldon St Eastbound			
Start Time	Left	Thru	Right	Left	Thru	Right	Left	Thru	Right	Left	Thru	Right	Int. Total
07:00 AM	0	0	0	1	0	0	0	0	0	0	0	0	1
07:15 AM	0	0	0	0	0	0	0	0	0	0	0	1	1
07:30 AM	0	0	0	0	1	0	0	0	0	0	0	0	1
Total	0	0	0	1	1	0	0	0	0	0	0	1	3
08:00 AM	0	0	0	0	0	0	0	0	0	0	2	0	2
08:45 AM	0	0	0	1	0	0	0	0	0	0	1	0	2
Total	0	0	0	1	0	0	0	0	0	0	3	0	4
09:15 AM	0	0	0	1	0	0	0	0	0	0	0	0	1
09:30 AM	0	0	0	1	0	0	0	0	0	0	0	0	1
09:45 AM	0	0	0	1	0	0	0	0	0	0	0	0	1
Total	0	0	0	3	0	0	0	0	0	0	0	0	3
12:00 PM	0	0	0	0	0	0	0	0	0	0	0	2	2
12:15 PM	0	0	0	0	1	0	0	0	0	0	0	0	1
12:30 PM	0	0	0	0	1	0	0	0	0	0	1	1	3
12:45 PM	0	0	0	0	0	0	0	0	0	0	2	1	3
Total	0	0	0	0	2	0	0	0	0	0	3	4	9
01:00 PM	0	0	0	0	1	0	0	0	0	0	0	2	3
01:15 PM	0	0	0	0	0	0	0	0	0	0	0	3	3
01:30 PM	0	0	0	0	0	0	0	0	0	0	1	0	1
Total	0	0	0	0	1	0	0	0	0	0	1	5	7
02:00 PM	0	0	0	0	1	0	0	0	0	0	0	0	1
Total	0	0	0	0	1	0	0	0	0	0	0	0	1
03:00 PM	0	0	0	0	0	0	0	0	0	0	1	0	1
03:45 PM	0	0	0	0	1	0	0	0	0	0	1	0	2
Total	0	0	0	0	1	0	0	0	0	0	2	0	3
04:00 PM	0	0	0	0	0	0	0	0	0	0	0	1	1
04:30 PM	0	0	0	0	0	0	0	0	0	0	1	0	1
Total	0	0	0	0	0	0	0	0	0	0	1	1	2
05:15 PM	0	0	0	1	0	0	0	0	0	0	1	0	2
05:45 PM	0	0	0	0	0	0	0	0	0	0	1	0	1
Total	0	0	0	1	0	0	0	0	0	0	2	0	3
Grand Total	0	0	0	6	6	0	0	0	0	0	12	11	35
Apprch %	0	0	0	50	50	0	0	0	0	0	52.2	47.8	
Total %	0	0	0	17.1	17.1	0	0	0	0	0	34.3	31.4	

CITY TRAFFIC COUNTERS

626.991.7522

www.ctcounters.com

File Name : 5NBRinSheldon_4Axle
Site Code : 00000000
Start Date : 1/15/2014
Page No : 2

	Rincon Ave Southbound				Sheldon St Westbound				I-5 NB Ramp Northbound				Sheldon St Eastbound				
Start Time	Left	Thru	Right	App. Total	Left	Thru	Right	App. Total	Left	Thru	Right	App. Total	Left	Thru	Right	App. Total	Int. Total
Peak Hour Analysis From 07:00 AM to 09:45 AM - Peak 1 of 1																	
Peak Hour for Entire Intersection Begins at 07:15 AM																	
07:15 AM	0	0	0	0	0	0	0	0	0	0	0	0	0	0	**1**	1	1
07:30 AM	0	0	0	0	0	**1**	0	**1**	0	0	0	0	0	0	0	0	1
07:45 AM	0	0	0	0	0	0	0	0	0	0	0	0	0	0	0	0	0
08:00 AM	0	0	0	0	0	0	0	0	0	0	0	0	0	**2**	0	**2**	**2**
Total Volume	0	0	0	0	0	1	0	1	0	0	0	0	0	2	1	3	4
% App. Total	0	0	0		0	100	0		0	0	0		0	66.7	33.3		
PHF	.000	.000	.000	.000	.000	.250	.000	.250	.000	.000	.000	.000	.000	.250	.250	.375	.500

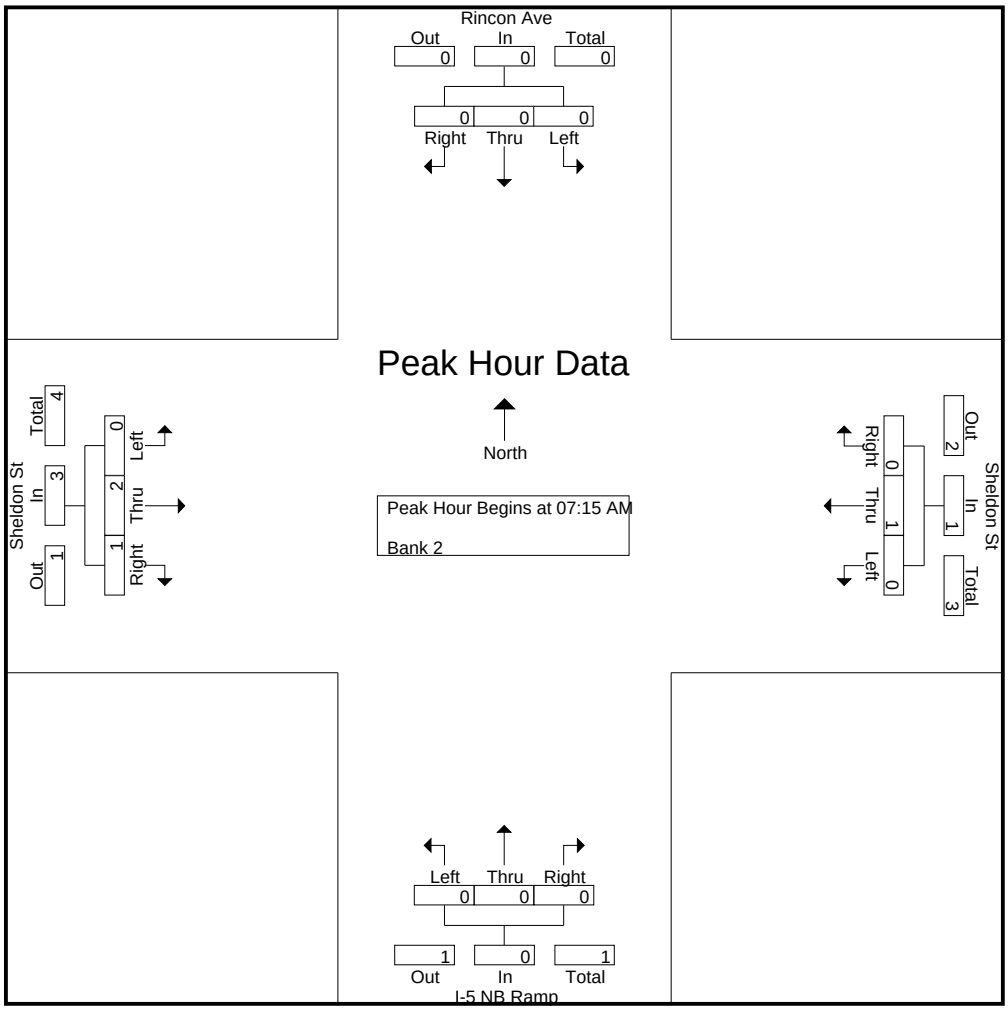

CITY TRAFFIC COUNTERS

626.991.7522

www.ctcounters.com

File Name : 5NBRinSheldon_4Axle
Site Code : 00000000
Start Date : 1/15/2014
Page No : 3

	Rincon Ave Southbound				Sheldon St Westbound				I-5 NB Ramp Northbound				Sheldon St Eastbound				
Start Time	Left	Thru	Right	App. Total	Left	Thru	Right	App. Total	Left	Thru	Right	App. Total	Left	Thru	Right	App. Total	Int. Total
Peak Hour Analysis From 10:00 AM to 01:45 PM - Peak 1 of 1																	
Peak Hour for Entire Intersection Begins at 12:30 PM																	
12:30 PM	0	0	0	0	0	**1**	0	**1**	0	0	0	0	0	1	1	2	**3**
12:45 PM	0	0	0	0	0	0	0	0	0	0	0	0	0	**2**	1	**3**	3
01:00 PM	0	0	0	0	0	1	0	1	0	0	0	0	0	0	2	2	3
01:15 PM	0	0	0	0	0	0	0	0	0	0	0	0	0	0	**3**	3	3
Total Volume	0	0	0	0	0	2	0	2	0	0	0	0	0	3	7	10	12
% App. Total	0	0	0		0	100	0		0	0	0		0	30	70		
PHF	.000	.000	.000	.000	.000	.500	.000	.500	.000	.000	.000	.000	.000	.375	.583	.833	1.00

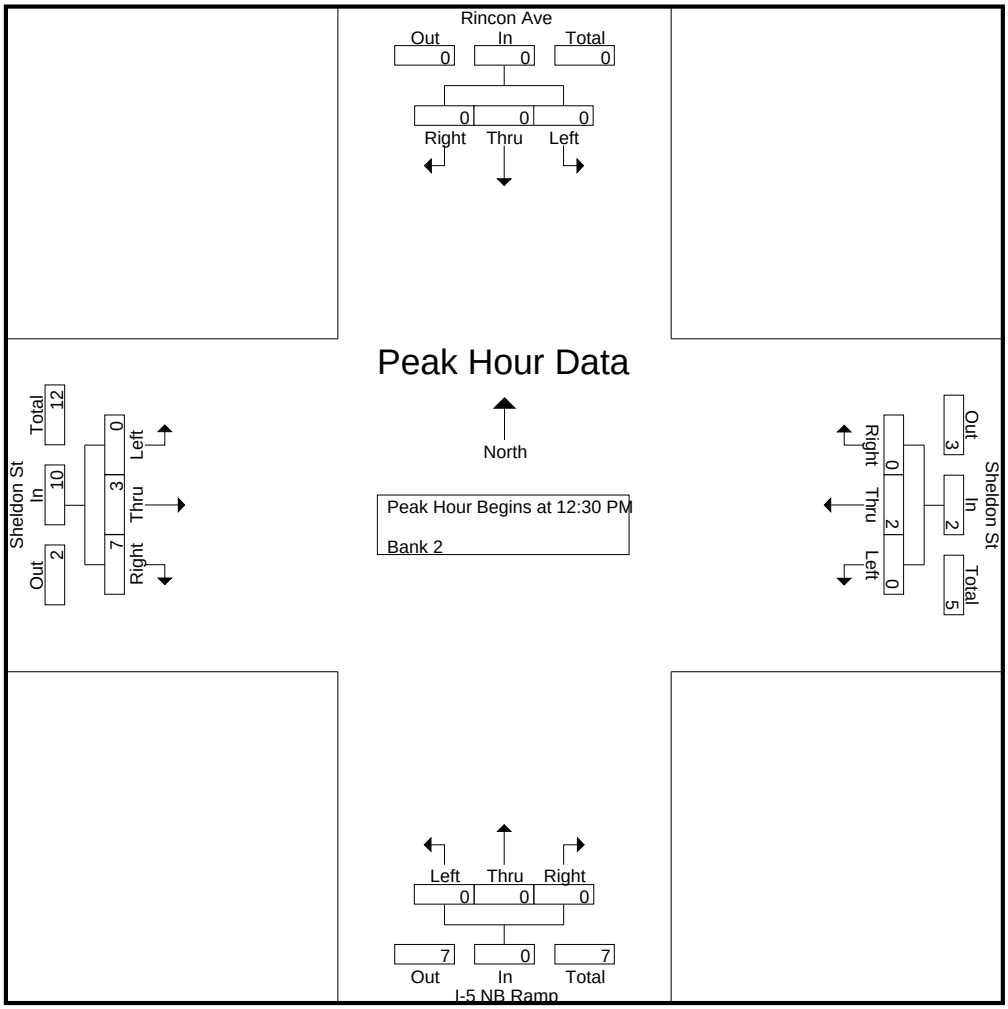

CITY TRAFFIC COUNTERS

626.991.7522

www.ctcounters.com

File Name : 5NBRinSheldon_4Axle
Site Code : 00000000
Start Date : 1/15/2014
Page No : 4

	Rincon Ave Southbound				Sheldon St Westbound				I-5 NB Ramp Northbound				Sheldon St Eastbound				
Start Time	Left	Thru	Right	App. Total	Left	Thru	Right	App. Total	Left	Thru	Right	App. Total	Left	Thru	Right	App. Total	Int. Total
Peak Hour Analysis From 02:00 PM to 05:45 PM - Peak 1 of 1																	
Peak Hour for Entire Intersection Begins at 03:45 PM																	
03:45 PM	0	0	0	0	0	**1**	0	**1**	0	0	0	0	0	**1**	0	**1**	**2**
04:00 PM	0	0	0	0	0	0	0	0	0	0	0	0	0	0	**1**	1	1
04:15 PM	0	0	0	0	0	0	0	0	0	0	0	0	0	0	0	0	0
04:30 PM	0	0	0	0	0	0	0	0	0	0	0	0	0	1	0	1	1
Total Volume	0	0	0	0	0	1	0	1	0	0	0	0	0	2	1	3	4
% App. Total	0	0	0		0	100	0		0	0	0		0	66.7	33.3		
PHF	.000	.000	.000	.000	.000	.250	.000	.250	.000	.000	.000	.000	.000	.500	.250	.750	.500

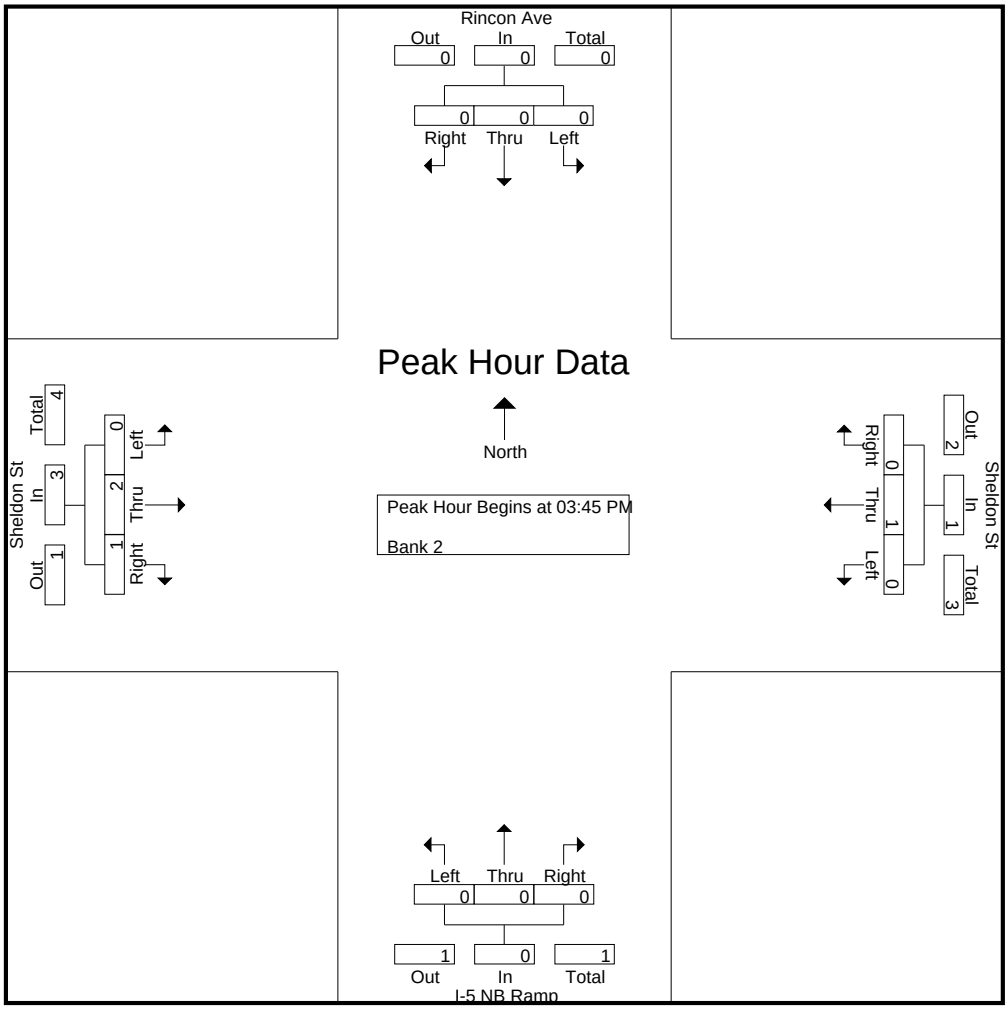

CITY TRAFFIC COUNTERS

626.991.7522

www.ctcounters.com

File Name : 5NBRinSheldon_5Axle
Site Code : 00000000
Start Date : 1/15/2014
Page No : 1

Groups Printed- Bank 2

	Rincon Ave Southbound			Sheldon St Westbound			I-5 NB Ramp Northbound			Sheldon St Eastbound			
Start Time	Left	Thru	Right	Left	Thru	Right	Left	Thru	Right	Left	Thru	Right	Int. Total
07:00 AM	0	0	0	0	2	0	0	0	0	0	4	2	8
07:15 AM	0	0	0	0	1	0	0	0	0	0	1	1	3
07:30 AM	0	0	0	1	1	0	0	0	0	0	1	0	3
07:45 AM	0	0	0	1	0	0	0	0	0	0	1	0	2
Total	0	0	0	2	4	0	0	0	0	0	7	3	16
08:00 AM	0	0	0	1	1	0	0	0	0	0	5	0	7
08:15 AM	0	0	0	0	1	0	0	0	0	0	1	1	3
08:30 AM	0	0	0	0	2	0	0	0	0	0	2	0	4
08:45 AM	0	0	0	0	0	0	0	0	0	0	2	0	2
Total	0	0	0	1	4	0	0	0	0	0	10	1	16
09:00 AM	0	0	0	1	2	0	0	0	0	0	2	0	5
09:15 AM	0	0	0	1	2	0	0	0	0	0	1	0	4
09:30 AM	0	0	0	0	4	0	0	0	0	0	4	0	8
09:45 AM	0	0	0	1	2	0	0	0	0	0	2	0	5
Total	0	0	0	3	10	0	0	0	0	0	9	0	22
12:00 PM	0	0	0	3	2	0	0	0	0	0	2	0	7
12:15 PM	0	0	0	0	0	0	0	0	0	0	4	0	4
12:30 PM	0	0	0	2	1	0	0	0	0	0	4	0	7
12:45 PM	0	0	0	0	2	0	0	0	0	0	2	1	5
Total	0	0	0	5	5	0	0	0	0	0	12	1	23
01:00 PM	0	0	0	0	0	0	0	0	0	0	2	0	2
01:15 PM	0	0	0	1	0	0	0	0	0	0	2	0	3
01:30 PM	0	0	0	0	0	0	0	0	0	0	1	0	1
01:45 PM	0	0	0	0	3	0	0	0	0	0	3	0	6
Total	0	0	0	1	3	0	0	0	0	0	8	0	12
03:00 PM	0	0	0	0	1	0	0	0	0	0	2	0	3
03:15 PM	0	0	0	0	1	0	0	0	0	0	2	0	3
03:30 PM	0	0	0	0	1	0	0	0	0	0	1	0	2
03:45 PM	0	0	0	0	0	0	0	0	0	0	1	0	1
Total	0	0	0	0	3	0	0	0	0	0	6	0	9
04:00 PM	0	0	0	0	0	0	0	0	0	0	0	1	1
04:30 PM	0	0	0	2	0	0	0	0	0	0	0	1	3
Total	0	0	0	2	0	0	0	0	0	0	0	2	4
05:30 PM	0	0	0	0	0	0	0	0	0	0	0	1	1
05:45 PM	0	0	0	0	0	0	0	0	0	0	1	0	1
Total	0	0	0	0	0	0	0	0	0	0	1	1	2
Grand Total	0	0	0	14	29	0	0	0	0	0	53	8	104
Apprch %	0	0	0	32.6	67.4	0	0	0	0	0	86.9	13.1	
Total %	0	0	0	13.5	27.9	0	0	0	0	0	51	7.7	

CITY TRAFFIC COUNTERS

626.991.7522

www.ctcounters.com

File Name : 5NBRinSheldon_5Axle
Site Code : 00000000
Start Date : 1/15/2014
Page No : 2

	Rincon Ave Southbound				Sheldon St Westbound				I-5 NB Ramp Northbound				Sheldon St Eastbound				
Start Time	Left	Thru	Right	App. Total	Left	Thru	Right	App. Total	Left	Thru	Right	App. Total	Left	Thru	Right	App. Total	Int. Total
Peak Hour Analysis From 07:00 AM to 09:45 AM - Peak 1 of 1																	
Peak Hour for Entire Intersection Begins at 09:00 AM																	
09:00 AM	0	0	0	0	**1**	2	0	3	0	0	0	0	0	2	0	2	5
09:15 AM	0	0	0	0	1	2	0	3	0	0	0	0	0	1	0	1	4
09:30 AM	0	0	0	0	0	**4**	0	**4**	0	0	0	0	0	**4**	0	**4**	**8**
09:45 AM	0	0	0	0	1	2	0	3	0	0	0	0	0	2	0	2	5
Total Volume	0	0	0	0	3	10	0	13	0	0	0	0	0	9	0	9	22
% App. Total	0	0	0		23.1	76.9	0		0	0	0		0	100	0		
PHF	.000	.000	.000	.000	.750	.625	.000	.813	.000	.000	.000	.000	.000	.563	.000	.563	.688

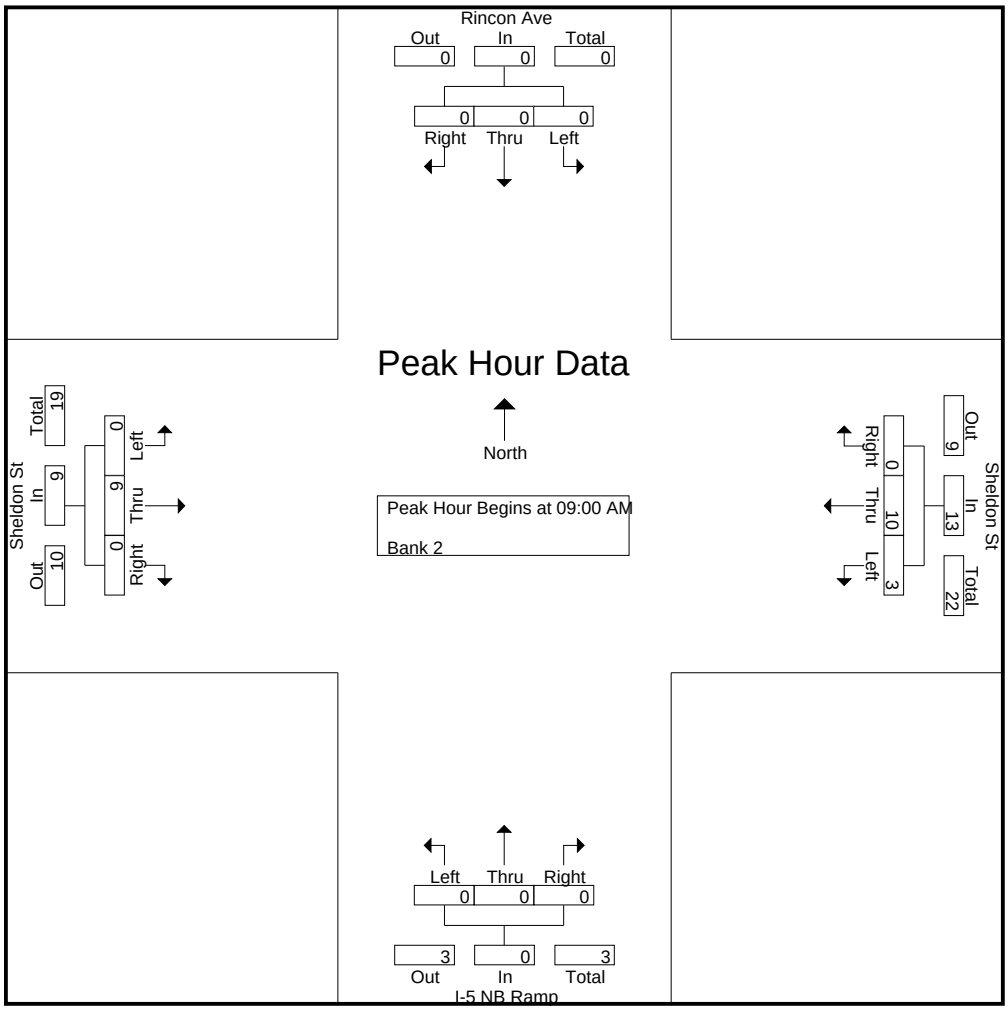

CITY TRAFFIC COUNTERS

626.991.7522

www.ctcounters.com

File Name : 5NBRinSheldon_5Axle
Site Code : 00000000
Start Date : 1/15/2014
Page No : 3

	Rincon Ave Southbound				Sheldon St Westbound				I-5 NB Ramp Northbound				Sheldon St Eastbound				
Start Time	Left	Thru	Right	App. Total	Left	Thru	Right	App. Total	Left	Thru	Right	App. Total	Left	Thru	Right	App. Total	Int. Total
Peak Hour Analysis From 10:00 AM to 01:45 PM - Peak 1 of 1																	
Peak Hour for Entire Intersection Begins at 12:00 PM																	
12:00 PM	0	0	0	0	**3**	**2**	0	**5**	0	0	0	0	0	2	0	2	**7**
12:15 PM	0	0	0	0	0	0	0	0	0	0	0	0	0	**4**	0	**4**	4
12:30 PM	0	0	0	0	2	1	0	3	0	0	0	0	0	4	0	4	7
12:45 PM	0	0	0	0	0	2	0	2	0	0	0	0	0	2	**1**	3	5
Total Volume	0	0	0	0	5	5	0	10	0	0	0	0	0	12	1	13	23
% App. Total	0	0	0		50	50	0		0	0	0		0	92.3	7.7		
PHF	.000	.000	.000	.000	.417	.625	.000	.500	.000	.000	.000	.000	.000	.750	.250	.813	.821

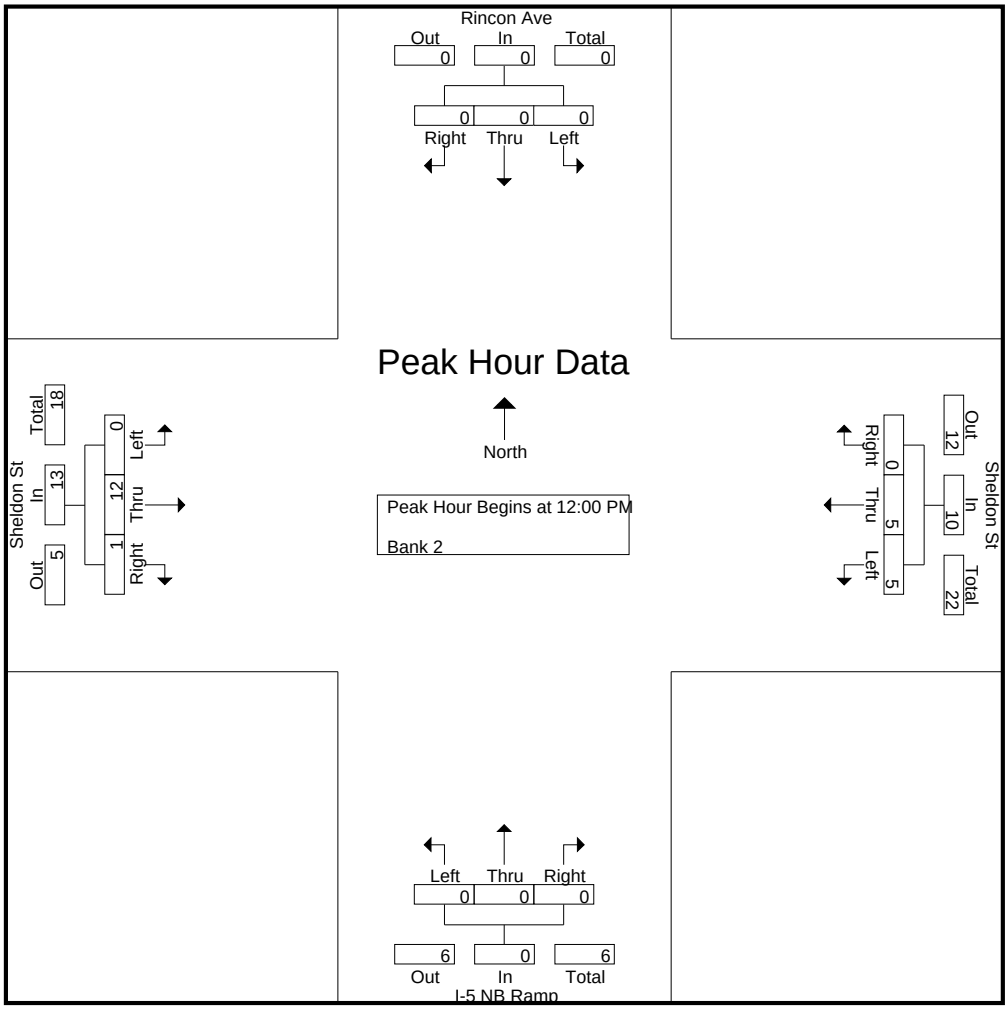

CITY TRAFFIC COUNTERS

626.991.7522

www.ctcounters.com

File Name : 5NBRinSheldon_5Axle
Site Code : 00000000
Start Date : 1/15/2014
Page No : 4

	Rincon Ave Southbound				Sheldon St Westbound				I-5 NB Ramp Northbound				Sheldon St Eastbound				
Start Time	Left	Thru	Right	App. Total	Left	Thru	Right	App. Total	Left	Thru	Right	App. Total	Left	Thru	Right	App. Total	Int. Total
Peak Hour Analysis From 02:00 PM to 05:45 PM - Peak 1 of 1																	
Peak Hour for Entire Intersection Begins at 03:00 PM																	
03:00 PM	0	0	0	0	0	**1**	0	**1**	0	0	0	0	0	**2**	0	**2**	**3**
03:15 PM	0	0	0	0	0	1	0	1	0	0	0	0	0	2	0	2	3
03:30 PM	0	0	0	0	0	1	0	1	0	0	0	0	0	1	0	1	2
03:45 PM	0	0	0	0	0	0	0	0	0	0	0	0	0	1	0	1	1
Total Volume	0	0	0	0	0	3	0	3	0	0	0	0	0	6	0	6	9
% App. Total	0	0	0		0	100	0		0	0	0		0	100	0		
PHF	.000	.000	.000	.000	.000	.750	.000	.750	.000	.000	.000	.000	.000	.750	.000	.750	.750

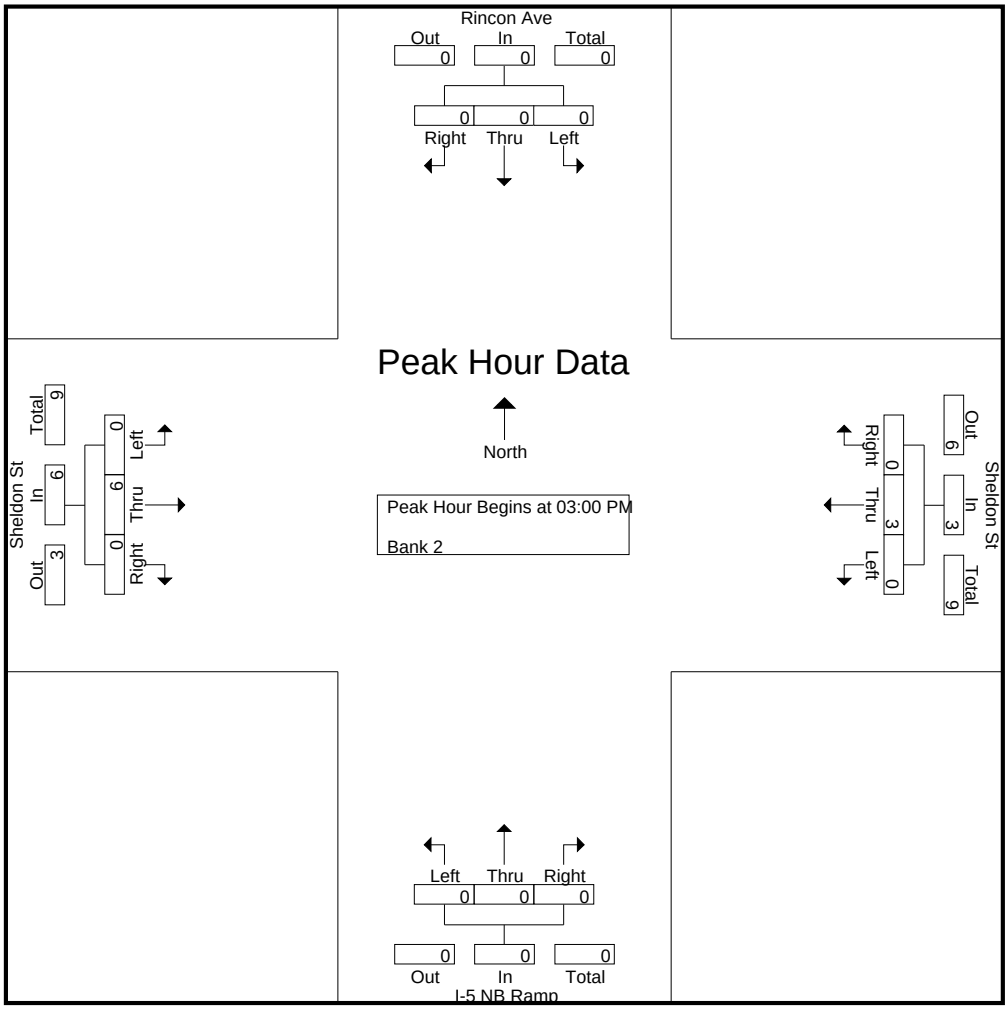

CITY TRAFFIC COUNTERS

626.991.7522

www.ctcounters.com

File Name : HaddonSheldon
Site Code : 00000000
Start Date : 1/15/2014
Page No : 1

Groups Printed- Unshifted

	Haddon Ave Southbound			Sheldon St Westbound			Haddon Ave Northbound			Sheldon St Eastbound			
Start Time	Left	Thru	Right	Left	Thru	Right	Left	Thru	Right	Left	Thru	Right	Int. Total
07:00 AM	1	1	3	1	159	0	18	1	1	2	97	17	301
07:15 AM	6	4	9	1	220	0	46	0	3	1	113	25	428
07:30 AM	5	5	11	9	218	1	52	6	6	4	140	54	511
07:45 AM	13	22	8	23	197	2	44	9	17	3	187	66	591
Total	25	32	31	34	794	3	160	16	27	10	537	162	1831
08:00 AM	7	8	4	4	195	6	52	14	16	4	146	30	486
08:15 AM	4	4	6	0	160	7	55	0	11	3	148	17	415
08:30 AM	1	2	3	1	150	0	27	0	6	2	99	8	299
08:45 AM	1	0	2	1	133	0	12	0	3	3	135	15	305
Total	13	14	15	6	638	13	146	14	36	12	528	70	1505
09:00 AM	1	0	4	2	119	1	13	0	2	3	100	13	258
09:15 AM	4	0	1	0	123	2	26	0	1	0	105	12	274
09:30 AM	3	0	4	1	125	0	36	0	1	3	126	3	302
09:45 AM	1	0	3	1	113	0	18	1	1	3	104	5	250
Total	9	0	12	4	480	3	93	1	5	9	435	33	1084
12:00 PM	2	0	3	0	136	1	12	0	2	2	117	12	287
12:15 PM	3	0	4	1	115	0	14	0	1	2	123	6	269
12:30 PM	4	2	5	4	129	3	15	0	0	1	101	8	272
12:45 PM	1	0	4	1	105	2	12	0	0	3	123	5	256
Total	10	2	16	6	485	6	53	0	3	8	464	31	1084
01:00 PM	1	2	1	1	103	0	10	1	0	2	130	11	262
01:15 PM	0	0	4	0	102	2	14	0	2	2	108	3	237
01:30 PM	2	0	2	0	119	0	11	3	0	3	154	5	299
01:45 PM	2	0	0	1	120	0	9	2	0	2	94	5	235
Total	5	2	7	2	444	2	44	6	2	9	486	24	1033
03:00 PM	2	4	5	1	200	0	39	4	6	3	163	24	451
03:15 PM	2	1	3	0	172	1	24	0	2	5	200	17	427
03:30 PM	3	2	6	0	172	1	17	0	1	2	206	26	436
03:45 PM	1	4	4	3	187	3	17	4	5	1	211	26	466
Total	8	11	18	4	731	5	97	8	14	11	780	93	1780
04:00 PM	2	1	5	0	138	2	51	3	7	2	181	26	418
04:15 PM	0	2	6	1	135	2	27	6	4	3	179	22	387
04:30 PM	2	1	3	6	153	2	30	1	4	0	177	18	397
04:45 PM	4	0	6	4	177	2	23	2	0	1	184	12	415
Total	8	4	20	11	603	8	131	12	15	6	721	78	1617
05:00 PM	1	2	5	5	193	0	30	2	8	4	184	23	457
05:15 PM	4	0	3	4	173	3	38	0	2	1	181	17	426
05:30 PM	2	4	4	7	169	6	27	1	4	4	196	20	444
05:45 PM	1	2	3	5	114	0	28	1	3	8	141	19	325
Total	8	8	15	21	649	9	123	4	17	17	702	79	1652
Grand Total	86	73	134	88	4824	49	847	61	119	82	4653	570	11586
Apprch %	29.4	24.9	45.7	1.8	97.2	1	82.5	5.9	11.6	1.5	87.7	10.7	
Total %	0.7	0.6	1.2	0.8	41.6	0.4	7.3	0.5	1	0.7	40.2	4.9	

CITY TRAFFIC COUNTERS

626.991.7522

www.ctcounters.com

File Name : HaddonSheldon
Site Code : 00000000
Start Date : 1/15/2014
Page No : 2

	Haddon Ave Southbound				Sheldon St Westbound				Haddon Ave Northbound				Sheldon St Eastbound				
Start Time	Left	Thru	Right	App. Total	Left	Thru	Right	App. Total	Left	Thru	Right	App. Total	Left	Thru	Right	App. Total	Int. Total
Peak Hour Analysis From 07:00 AM to 09:45 AM - Peak 1 of 1																	
Peak Hour for Entire Intersection Begins at 07:15 AM																	
07:15 AM	6	4	9	19	1	**220**	0	221	46	0	3	49	1	113	25	139	428
07:30 AM	5	5	**11**	21	9	218	1	**228**	**52**	6	6	64	**4**	140	54	198	511
07:45 AM	**13**	**22**	8	**43**	**23**	197	2	222	44	9	**17**	70	3	**187**	**66**	**256**	**591**
08:00 AM	7	8	4	19	4	195	**6**	205	52	**14**	16	**82**	4	146	30	180	486
Total Volume	31	39	32	102	37	830	9	876	194	29	42	265	12	586	175	773	2016
% App. Total	30.4	38.2	31.4		4.2	94.7	1		73.2	10.9	15.8		1.6	75.8	22.6		
PHF	.596	.443	.727	.593	.402	.943	.375	.961	.933	.518	.618	.808	.750	.783	.663	.755	.853

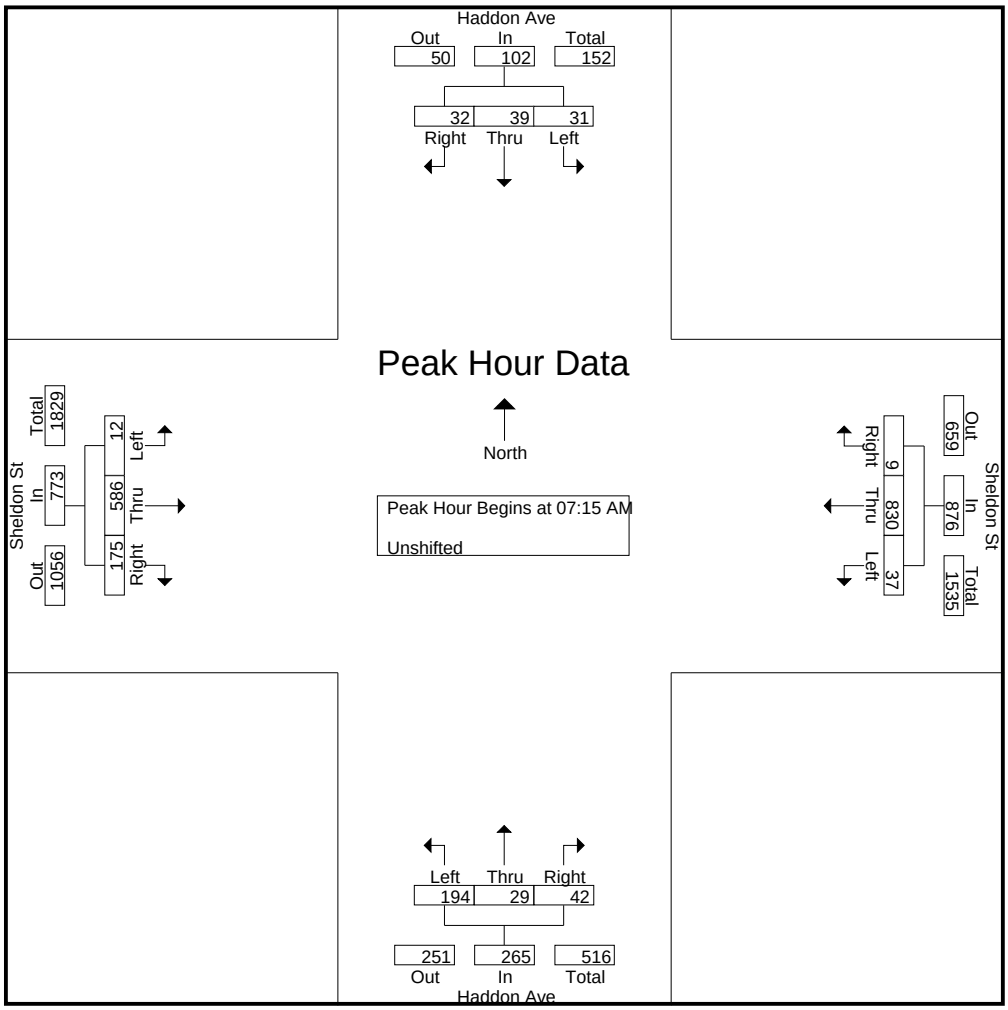

CITY TRAFFIC COUNTERS

626.991.7522

www.ctcounters.com

File Name : HaddonSheldon
Site Code : 00000000
Start Date : 1/15/2014
Page No : 3

	Haddon Ave Southbound				Sheldon St Westbound				Haddon Ave Northbound				Sheldon St Eastbound				
Start Time	Left	Thru	Right	App. Total	Left	Thru	Right	App. Total	Left	Thru	Right	App. Total	Left	Thru	Right	App. Total	Int. Total
Peak Hour Analysis From 10:00 AM to 01:45 PM - Peak 1 of 1																	
Peak Hour for Entire Intersection Begins at 12:00 PM																	
12:00 PM	2	0	3	5	0	**136**	1	**137**	12	0	**2**	14	2	117	**12**	**131**	**287**
12:15 PM	3	0	4	7	1	115	0	116	14	0	1	**15**	2	**123**	6	131	269
12:30 PM	**4**	**2**	**5**	**11**	**4**	129	**3**	136	**15**	0	0	15	1	101	8	110	272
12:45 PM	1	0	4	5	1	105	2	108	12	0	0	12	**3**	123	5	131	256
Total Volume	10	2	16	28	6	485	6	497	53	0	3	56	8	464	31	503	1084
% App. Total	35.7	7.1	57.1		1.2	97.6	1.2		94.6	0	5.4		1.6	92.2	6.2		
PHF	.625	.250	.800	.636	.375	.892	.500	.907	.883	.000	.375	.933	.667	.943	.646	.960	.944

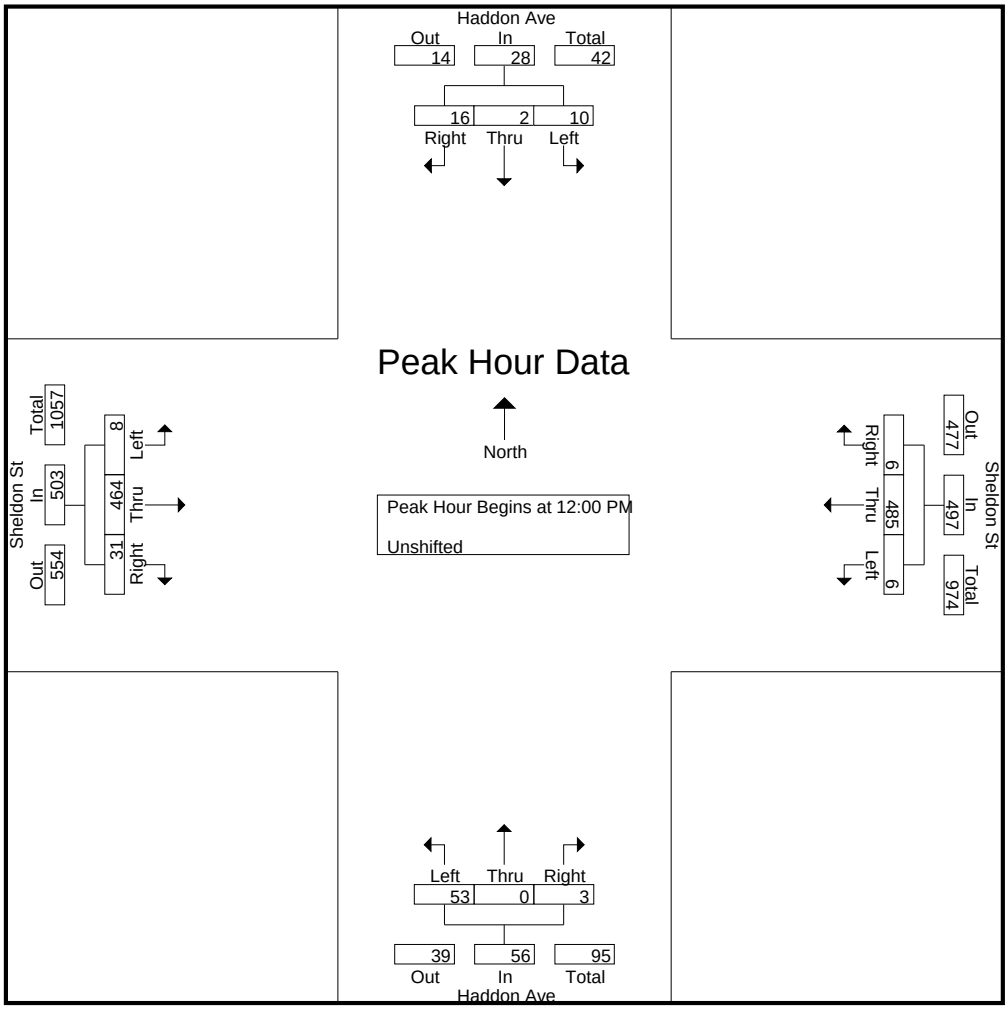

CITY TRAFFIC COUNTERS

626.991.7522

www.ctcounters.com

File Name : HaddonSheldon
Site Code : 00000000
Start Date : 1/15/2014
Page No : 4

	Haddon Ave Southbound				Sheldon St Westbound				Haddon Ave Northbound				Sheldon St Eastbound				
Start Time	Left	Thru	Right	App. Total	Left	Thru	Right	App. Total	Left	Thru	Right	App. Total	Left	Thru	Right	App. Total	Int. Total
Peak Hour Analysis From 02:00 PM to 05:45 PM - Peak 1 of 1																	
Peak Hour for Entire Intersection Begins at 03:00 PM																	
03:00 PM	2	**4**	5	**11**	1	**200**	0	**201**	**39**	**4**	**6**	**49**	3	163	24	190	451
03:15 PM	2	1	3	6	0	172	1	173	24	0	2	26	**5**	200	17	222	427
03:30 PM	**3**	2	**6**	11	0	172	1	173	17	0	1	18	2	206	**26**	234	436
03:45 PM	1	4	4	9	**3**	187	**3**	193	17	4	5	26	1	**211**	26	**238**	**466**
Total Volume	8	11	18	37	4	731	5	740	97	8	14	119	11	780	93	884	1780
% App. Total	21.6	29.7	48.6		0.5	98.8	0.7		81.5	6.7	11.8		1.2	88.2	10.5		
PHF	.667	.688	.750	.841	.333	.914	.417	.920	.622	.500	.583	.607	.550	.924	.894	.929	.955

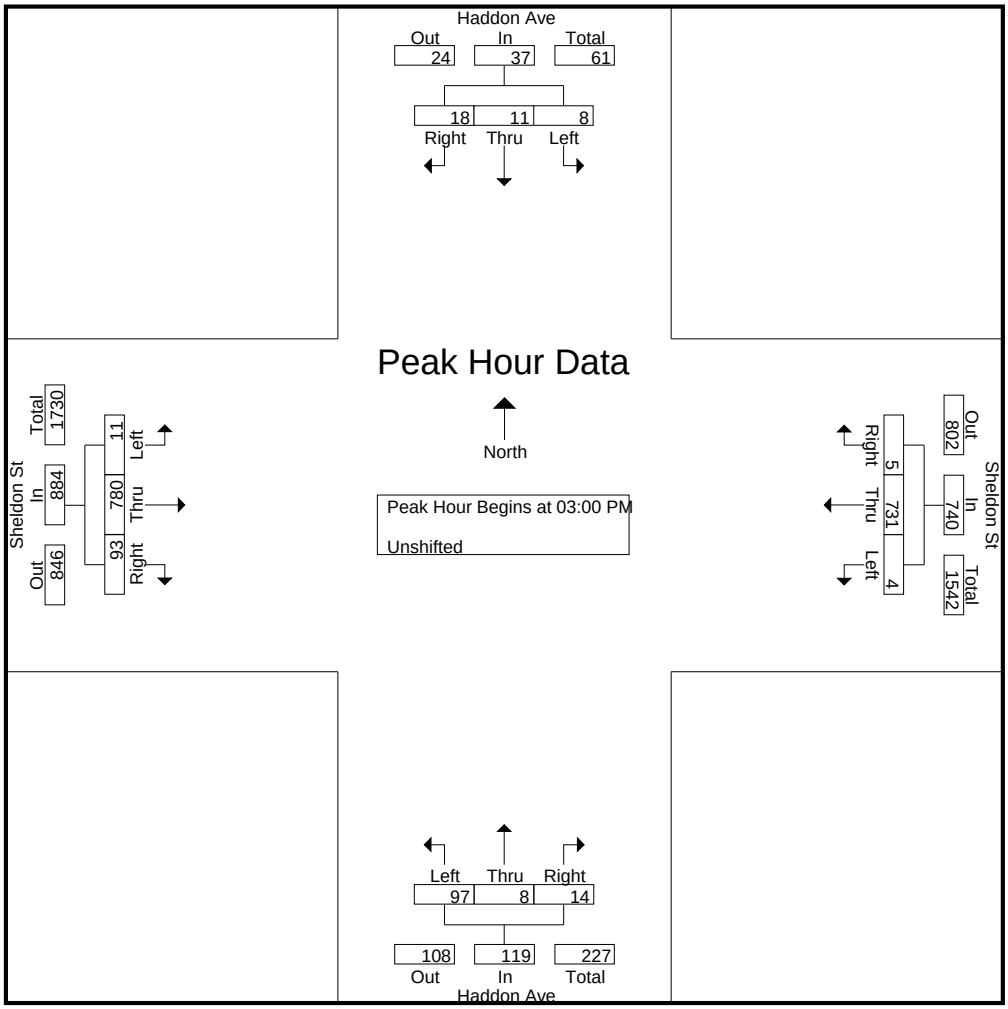

CITY TRAFFIC COUNTERS

626.991.7522

www.ctcounters.com

File Name : HaddonSheldon_MC
Site Code : 00000000
Start Date : 1/15/2014
Page No : 1

Groups Printed- Bank 2

	Haddon Ave Southbound			Sheldon St Westbound			Haddon Ave Northbound			Sheldon St Eastbound			
Start Time	Left	Thru	Right	Left	Thru	Right	Left	Thru	Right	Left	Thru	Right	Int. Total
07:00 AM	0	0	0	0	1	0	1	0	0	0	0	1	3
07:15 AM	0	0	0	0	1	0	0	0	0	0	0	0	1
07:30 AM	0	0	0	0	0	0	0	0	0	0	2	0	2
07:45 AM	0	0	0	0	0	0	0	0	0	0	1	0	1
Total	0	0	0	0	2	0	1	0	0	0	3	1	7
08:00 AM	0	0	0	0	0	0	0	0	0	0	1	0	1
08:15 AM	0	0	0	0	1	0	0	0	0	0	0	0	1
08:30 AM	0	0	0	0	2	0	0	0	0	0	1	0	3
Total	0	0	0	0	3	0	0	0	0	0	2	0	5
09:15 AM	0	0	0	0	0	0	0	0	0	0	1	0	1
09:30 AM	0	0	1	0	1	0	0	0	0	0	0	0	2
09:45 AM	0	0	0	0	3	0	0	0	0	0	0	0	3
Total	0	0	1	0	4	0	0	0	0	0	1	0	6
12:00 PM	0	0	0	0	1	0	0	0	0	0	0	0	1
Total	0	0	0	0	1	0	0	0	0	0	0	0	1
01:00 PM	0	0	0	0	0	0	0	0	0	0	0	1	1
01:45 PM	0	0	0	0	2	0	0	0	0	0	0	0	2
Total	0	0	0	0	2	0	0	0	0	0	0	1	3
04:00 PM	0	0	0	0	1	0	0	0	0	0	0	0	1
04:15 PM	0	0	0	0	1	0	0	0	0	0	2	0	3
04:30 PM	0	0	0	0	0	0	0	0	0	0	1	0	1
04:45 PM	0	0	0	0	2	0	1	0	0	0	1	0	4
Total	0	0	0	0	4	0	1	0	0	0	4	0	9
05:00 PM	0	0	0	0	1	0	0	1	0	0	1	0	3
05:15 PM	0	0	0	0	2	0	0	1	0	0	1	0	4
05:30 PM	0	0	0	0	0	0	0	0	0	0	1	0	1
05:45 PM	0	0	0	0	2	0	0	0	0	0	0	0	2
Total	0	0	0	0	5	0	0	2	0	0	3	0	10
Grand Total	0	0	1	0	21	0	2	2	0	0	13	2	41
Apprch %	0	0	100	0	100	0	50	50	0	0	86.7	13.3	
Total %	0	0	2.4	0	51.2	0	4.9	4.9	0	0	31.7	4.9	

CITY TRAFFIC COUNTERS

626.991.7522

www.ctcounters.com

File Name : HaddonSheldon_MC
Site Code : 00000000
Start Date : 1/15/2014
Page No : 2

	Haddon Ave Southbound				Sheldon St Westbound				Haddon Ave Northbound				Sheldon St Eastbound				
Start Time	Left	Thru	Right	App. Total	Left	Thru	Right	App. Total	Left	Thru	Right	App. Total	Left	Thru	Right	App. Total	Int. Total
Peak Hour Analysis From 07:00 AM to 09:45 AM - Peak 1 of 1																	
Peak Hour for Entire Intersection Begins at 07:00 AM																	
07:00 AM	0	0	0	0	0	**1**	0	**1**	**1**	0	0	**1**	0	0	**1**	1	**3**
07:15 AM	0	0	0	0	0	1	0	1	0	0	0	0	0	0	0	0	1
07:30 AM	0	0	0	0	0	0	0	0	0	0	0	0	0	**2**	0	**2**	2
07:45 AM	0	0	0	0	0	0	0	0	0	0	0	0	0	1	0	1	1
Total Volume	0	0	0	0	0	2	0	2	1	0	0	1	0	3	1	4	7
% App. Total	0	0	0		0	100	0		100	0	0		0	75	25		
PHF	.000	.000	.000	.000	.000	.500	.000	.500	.250	.000	.000	.250	.000	.375	.250	.500	.583

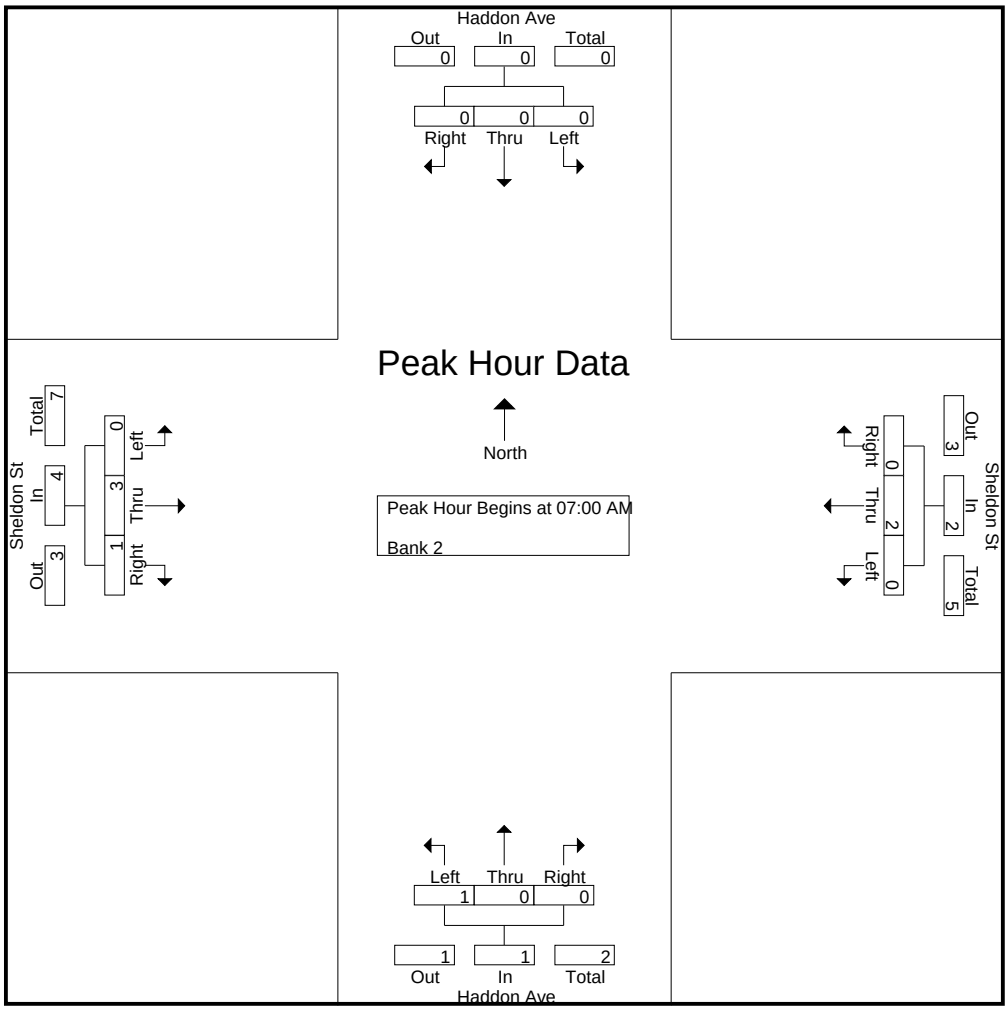

CITY TRAFFIC COUNTERS

626.991.7522

www.ctcounters.com

File Name : HaddonSheldon_MC
Site Code : 00000000
Start Date : 1/15/2014
Page No : 3

	Haddon Ave Southbound				Sheldon St Westbound				Haddon Ave Northbound				Sheldon St Eastbound				
Start Time	Left	Thru	Right	App. Total	Left	Thru	Right	App. Total	Left	Thru	Right	App. Total	Left	Thru	Right	App. Total	Int. Total
Peak Hour Analysis From 10:00 AM to 01:45 PM - Peak 1 of 1																	
Peak Hour for Entire Intersection Begins at 01:00 PM																	
01:00 PM	0	0	0	0	0	0	0	0	0	0	0	0	0	0	**1**	**1**	1
01:15 PM	0	0	0	0	0	0	0	0	0	0	0	0	0	0	0	0	0
01:30 PM	0	0	0	0	0	0	0	0	0	0	0	0	0	0	0	0	0
01:45 PM	0	0	0	0	0	**2**	0	**2**	0	0	0	0	0	0	0	0	**2**
Total Volume	0	0	0	0	0	2	0	2	0	0	0	0	0	0	1	1	3
% App. Total	0	0	0		0	100	0		0	0	0		0	0	100		
PHF	.000	.000	.000	.000	.000	.250	.000	.250	.000	.000	.000	.000	.000	.000	.250	.250	.375

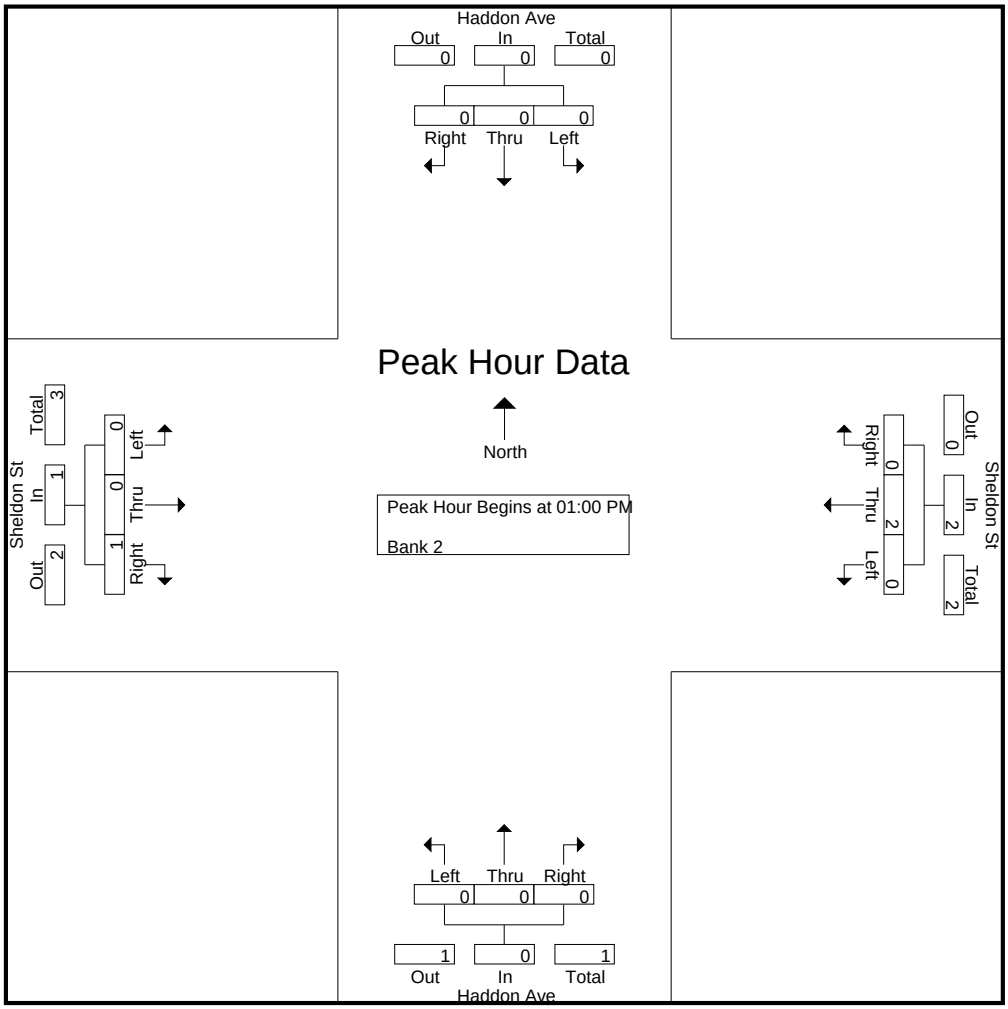

CITY TRAFFIC COUNTERS

626.991.7522

www.ctcounters.com

File Name : HaddonSheldon_MC
Site Code : 00000000
Start Date : 1/15/2014
Page No : 4

	Haddon Ave Southbound				Sheldon St Westbound				Haddon Ave Northbound				Sheldon St Eastbound				
Start Time	Left	Thru	Right	App. Total	Left	Thru	Right	App. Total	Left	Thru	Right	App. Total	Left	Thru	Right	App. Total	Int. Total
Peak Hour Analysis From 02:00 PM to 05:45 PM - Peak 1 of 1																	
Peak Hour for Entire Intersection Begins at 04:30 PM																	
04:30 PM	0	0	0	0	0	0	0	0	0	0	0	0	0	**1**	0	**1**	1
04:45 PM	0	0	0	0	0	**2**	0	**2**	**1**	0	0	**1**	0	1	0	1	**4**
05:00 PM	0	0	0	0	0	1	0	1	0	**1**	0	1	0	1	0	1	3
05:15 PM	0	0	0	0	0	2	0	2	0	1	0	1	0	1	0	1	4
Total Volume	0	0	0	0	0	5	0	5	1	2	0	3	0	4	0	4	12
% App. Total	0	0	0		0	100	0		33.3	66.7	0		0	100	0		
PHF	.000	.000	.000	.000	.000	.625	.000	.625	.250	.500	.000	.750	.000	1.00	.000	1.00	.750

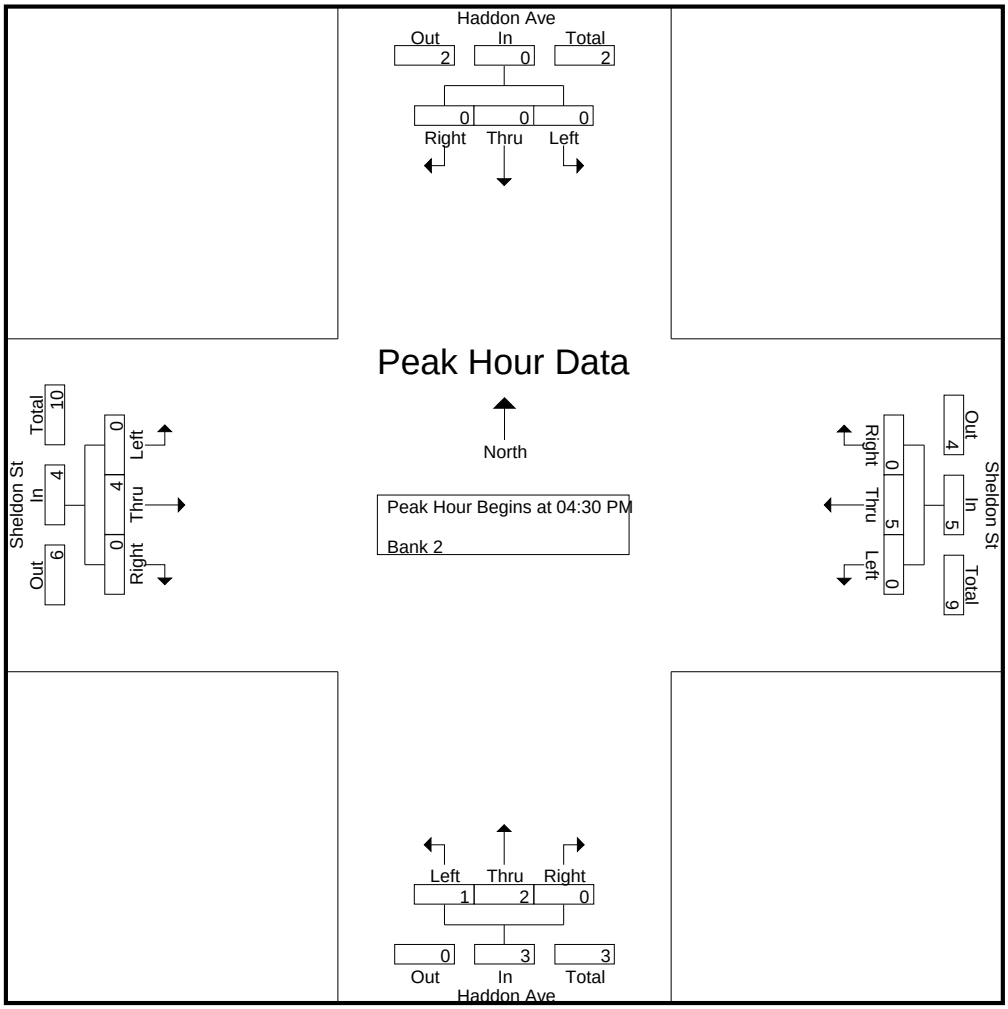

CITY TRAFFIC COUNTERS

626.991.7522

www.ctcounters.com

File Name : HaddonSheldon_Bus
Site Code : 00000000
Start Date : 1/15/2014
Page No : 1

Groups Printed- Bank 1

	Haddon Ave Southbound			Sheldon St Westbound			Haddon Ave Northbound			Sheldon St Eastbound			
Start Time	Left	Thru	Right	Left	Thru	Right	Left	Thru	Right	Left	Thru	Right	Int. Total
07:00 AM	0	0	0	0	3	0	1	0	1	0	3	0	8
07:15 AM	0	0	0	0	0	0	0	0	0	0	3	0	3
07:30 AM	0	0	0	0	0	1	0	0	2	0	0	0	3
07:45 AM	0	0	0	0	1	0	1	0	0	0	1	0	3
Total	0	0	0	0	4	1	2	0	3	0	7	0	17
08:00 AM	0	0	0	0	0	0	0	0	0	0	0	1	1
08:15 AM	0	0	0	0	0	0	0	0	0	0	1	0	1
08:30 AM	0	0	0	0	1	0	0	0	0	0	3	0	4
08:45 AM	0	0	0	0	1	0	0	0	0	0	2	0	3
Total	0	0	0	0	2	0	0	0	0	0	6	1	9
09:00 AM	0	0	0	0	1	0	0	0	0	0	2	0	3
09:15 AM	0	0	0	0	0	0	0	0	0	0	1	0	1
09:30 AM	0	0	0	0	0	0	0	0	0	0	4	0	4
Total	0	0	0	0	1	0	0	0	0	0	7	0	8
12:00 PM	0	0	0	0	2	0	0	0	0	0	1	0	3
12:15 PM	0	0	0	0	1	0	0	0	0	0	0	0	1
Total	0	0	0	0	3	0	0	0	0	0	1	0	4
01:00 PM	0	0	0	0	1	0	0	0	0	0	1	0	2
01:15 PM	0	0	0	0	1	0	0	0	0	0	3	0	4
01:30 PM	0	0	0	0	1	0	0	0	0	0	2	0	3
01:45 PM	0	0	0	0	0	0	0	0	0	0	3	0	3
Total	0	0	0	0	3	0	0	0	0	0	9	0	12
03:00 PM	0	0	0	0	0	0	3	0	0	0	1	0	4
03:15 PM	0	0	0	0	0	0	0	0	0	0	1	0	1
03:30 PM	0	0	0	0	2	0	0	0	0	0	1	0	3
03:45 PM	0	0	0	0	2	0	0	0	0	0	1	0	3
Total	0	0	0	0	4	0	3	0	0	0	4	0	11
04:00 PM	0	0	0	0	1	0	0	0	0	0	5	0	6
04:15 PM	0	0	0	0	1	0	0	0	0	0	2	0	3
04:30 PM	0	0	0	0	0	0	0	0	0	0	1	0	1
04:45 PM	0	0	0	0	0	0	0	0	0	0	2	0	2
Total	0	0	0	0	2	0	0	0	0	0	10	0	12
05:30 PM	0	0	0	0	0	0	0	0	0	0	1	0	1
05:45 PM	0	0	0	0	0	0	0	0	0	0	1	0	1
Total	0	0	0	0	0	0	0	0	0	0	2	0	2
Grand Total	0	0	0	0	19	1	5	0	3	0	46	1	75
Apprch %	0	0	0	0	95	5	62.5	0	37.5	0	97.9	2.1	
Total %	0	0	0	0	25.3	1.3	6.7	0	4	0	61.3	1.3	

CITY TRAFFIC COUNTERS

626.991.7522

www.ctcounters.com

File Name : HaddonSheldon_Bus
Site Code : 00000000
Start Date : 1/15/2014
Page No : 2

	Haddon Ave Southbound				Sheldon St Westbound				Haddon Ave Northbound				Sheldon St Eastbound				
Start Time	Left	Thru	Right	App. Total	Left	Thru	Right	App. Total	Left	Thru	Right	App. Total	Left	Thru	Right	App. Total	Int. Total
Peak Hour Analysis From 07:00 AM to 09:45 AM - Peak 1 of 1																	
Peak Hour for Entire Intersection Begins at 07:00 AM																	
07:00 AM	0	0	0	0	0	**3**	0	**3**	**1**	0	1	**2**	0	**3**	0	**3**	**8**
07:15 AM	0	0	0	0	0	0	0	0	0	0	0	0	0	3	0	3	3
07:30 AM	0	0	0	0	0	0	**1**	1	0	0	**2**	2	0	0	0	0	3
07:45 AM	0	0	0	0	0	1	0	1	1	0	0	1	0	1	0	1	3
Total Volume	0	0	0	0	0	4	1	5	2	0	3	5	0	7	0	7	17
% App. Total	0	0	0		0	80	20		40	0	60		0	100	0		
PHF	.000	.000	.000	.000	.000	.333	.250	.417	.500	.000	.375	.625	.000	.583	.000	.583	.531

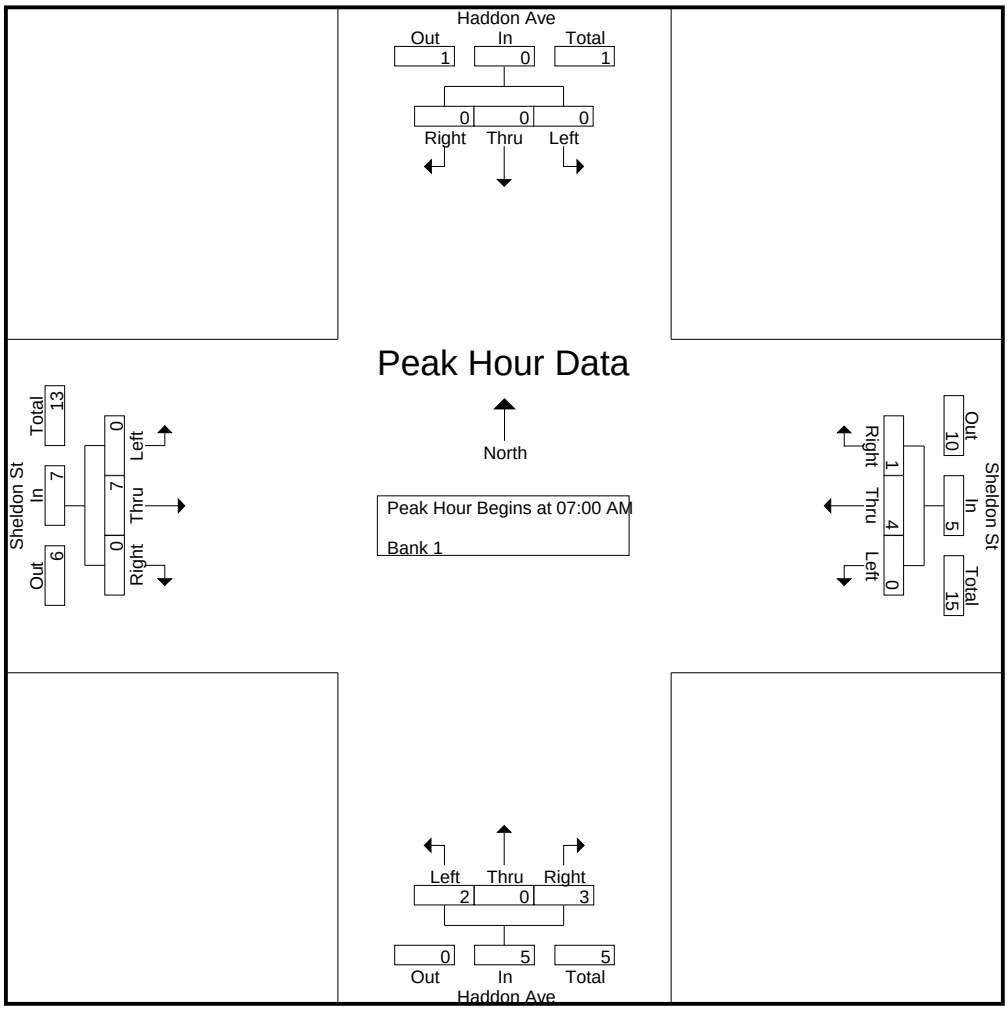

CITY TRAFFIC COUNTERS

626.991.7522

www.ctcounters.com

File Name : HaddonSheldon_Bus
Site Code : 00000000
Start Date : 1/15/2014
Page No : 3

	Haddon Ave Southbound				Sheldon St Westbound				Haddon Ave Northbound				Sheldon St Eastbound				
Start Time	Left	Thru	Right	App. Total	Left	Thru	Right	App. Total	Left	Thru	Right	App. Total	Left	Thru	Right	App. Total	Int. Total
Peak Hour Analysis From 10:00 AM to 01:45 PM - Peak 1 of 1																	
Peak Hour for Entire Intersection Begins at 01:00 PM																	
01:00 PM	0	0	0	0	0	**1**	0	**1**	0	0	0	0	0	1	0	1	2
01:15 PM	0	0	0	0	0	1	0	1	0	0	0	0	0	**3**	0	**3**	**4**
01:30 PM	0	0	0	0	0	1	0	1	0	0	0	0	0	2	0	2	3
01:45 PM	0	0	0	0	0	0	0	0	0	0	0	0	0	3	0	3	3
Total Volume	0	0	0	0	0	3	0	3	0	0	0	0	0	9	0	9	12
% App. Total	0	0	0		0	100	0		0	0	0		0	100	0		
PHF	.000	.000	.000	.000	.000	.750	.000	.750	.000	.000	.000	.000	.000	.750	.000	.750	.750

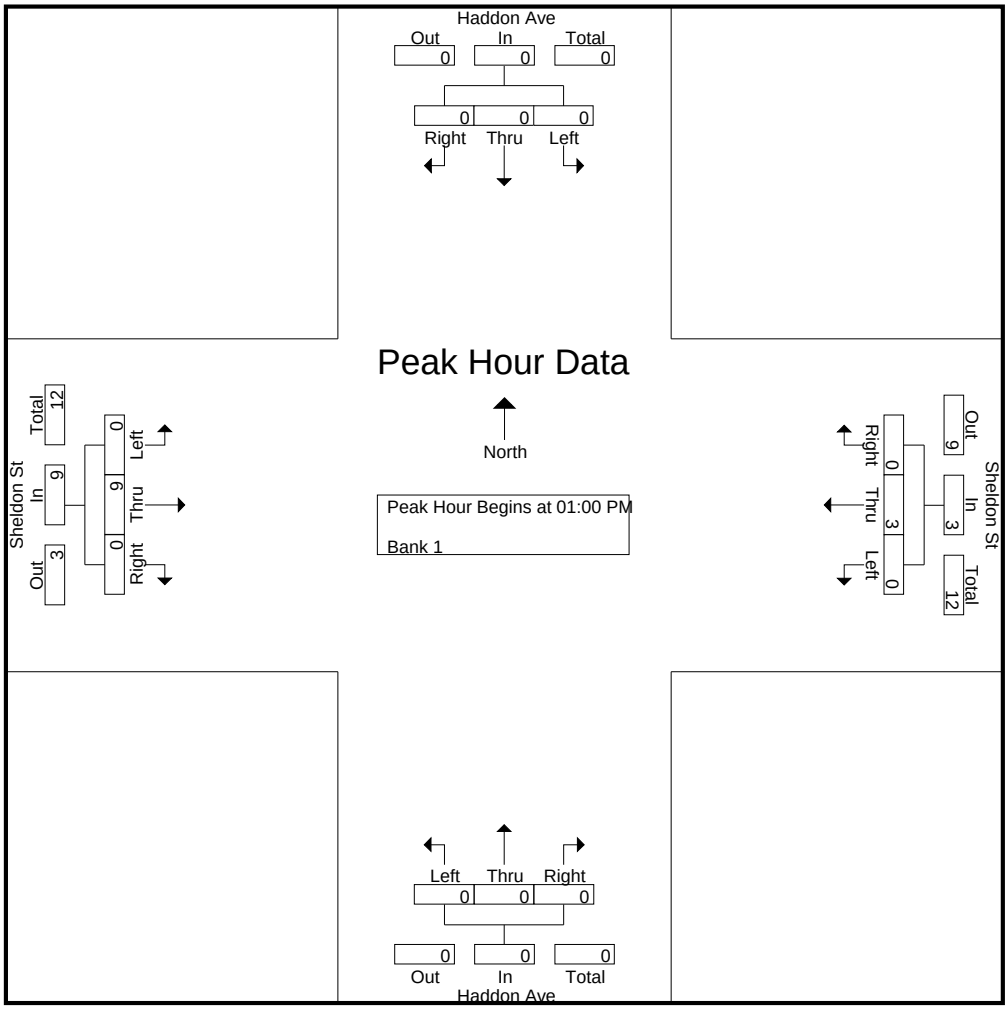

CITY TRAFFIC COUNTERS

626.991.7522

www.ctcounters.com

File Name : HaddonSheldon_Bus
Site Code : 00000000
Start Date : 1/15/2014
Page No : 4

	Haddon Ave Southbound				Sheldon St Westbound				Haddon Ave Northbound				Sheldon St Eastbound				
Start Time	Left	Thru	Right	App. Total	Left	Thru	Right	App. Total	Left	Thru	Right	App. Total	Left	Thru	Right	App. Total	Int. Total
Peak Hour Analysis From 02:00 PM to 05:45 PM - Peak 1 of 1																	
Peak Hour for Entire Intersection Begins at 03:30 PM																	
03:30 PM	0	0	0	0	0	**2**	0	**2**	0	0	0	0	0	1	0	1	3
03:45 PM	0	0	0	0	0	2	0	2	0	0	0	0	0	1	0	1	3
04:00 PM	0	0	0	0	0	1	0	1	0	0	0	0	0	**5**	0	**5**	**6**
04:15 PM	0	0	0	0	0	1	0	1	0	0	0	0	0	2	0	2	3
Total Volume	0	0	0	0	0	6	0	6	0	0	0	0	0	9	0	9	15
% App. Total	0	0	0		0	100	0		0	0	0		0	100	0		
PHF	.000	.000	.000	.000	.000	.750	.000	.750	.000	.000	.000	.000	.000	.450	.000	.450	.625

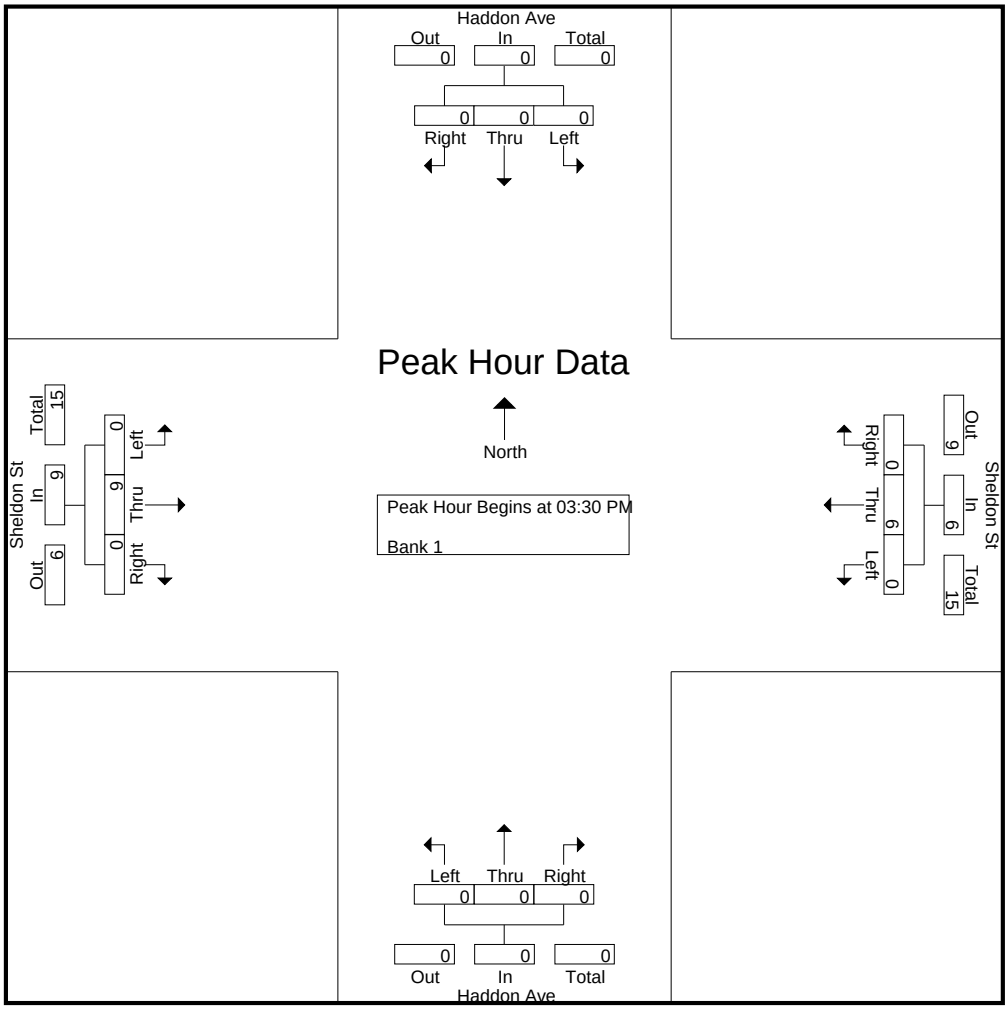

CITY TRAFFIC COUNTERS

626.991.7522

www.ctcounters.com

File Name : HaddonSheldon_2Axle
Site Code : 00000000
Start Date : 1/15/2014
Page No : 1

Groups Printed- Unshifted

	Haddon Ave Southbound			Sheldon St Westbound			Haddon Ave Northbound			Sheldon St Eastbound			
Start Time	Left	Thru	Right	Left	Thru	Right	Left	Thru	Right	Left	Thru	Right	Int. Total
07:00 AM	0	0	0	0	5	0	0	0	0	0	7	0	12
07:15 AM	1	0	0	0	6	0	0	0	0	0	4	0	11
07:30 AM	0	0	0	0	3	0	0	0	0	0	6	0	9
07:45 AM	0	0	0	0	9	0	0	0	0	0	5	0	14
Total	1	0	0	0	23	0	0	0	0	0	22	0	46
08:00 AM	0	0	0	0	4	0	0	0	0	0	6	0	10
08:15 AM	0	0	0	0	11	0	0	0	0	0	8	0	19
08:30 AM	0	0	0	0	7	0	0	0	0	0	6	0	13
08:45 AM	0	0	0	0	11	0	0	0	0	0	7	0	18
Total	0	0	0	0	33	0	0	0	0	0	27	0	60
09:00 AM	0	0	0	0	12	0	0	0	0	0	6	0	18
09:15 AM	0	0	0	0	10	0	0	0	1	0	12	0	23
09:30 AM	0	0	0	0	9	0	0	0	0	0	9	0	18
09:45 AM	0	0	0	0	3	0	0	0	0	0	6	0	9
Total	0	0	0	0	34	0	0	0	1	0	33	0	68
12:00 PM	0	0	0	0	5	0	0	0	0	0	4	0	9
12:15 PM	0	0	0	0	5	0	0	0	0	0	4	0	9
12:30 PM	0	0	0	0	5	0	0	0	0	0	2	0	7
12:45 PM	0	0	0	0	5	0	0	0	0	0	6	0	11
Total	0	0	0	0	20	0	0	0	0	0	16	0	36
01:00 PM	0	0	0	0	4	0	0	0	0	0	5	0	9
01:15 PM	0	0	0	0	7	0	1	0	1	0	3	0	12
01:30 PM	0	0	0	0	9	0	0	0	0	0	4	0	13
01:45 PM	0	0	0	0	10	0	0	0	0	0	11	0	21
Total	0	0	0	0	30	0	1	0	1	0	23	0	55
03:00 PM	0	0	0	0	8	0	0	0	0	0	8	1	17
03:15 PM	0	0	0	0	8	0	0	0	1	0	10	0	19
03:30 PM	0	0	0	0	10	0	0	0	0	0	11	0	21
03:45 PM	0	0	0	0	4	0	0	0	0	0	11	0	15
Total	0	0	0	0	30	0	0	0	1	0	40	1	72
04:00 PM	0	0	0	0	4	0	0	0	0	0	7	0	11
04:15 PM	1	0	0	0	4	0	0	0	0	0	8	0	13
04:30 PM	0	0	0	0	2	0	0	0	0	0	4	0	6
04:45 PM	0	0	0	0	2	0	0	0	0	0	7	0	9
Total	1	0	0	0	12	0	0	0	0	0	26	0	39
05:00 PM	0	0	0	0	4	0	0	0	0	0	6	0	10
05:15 PM	0	0	0	0	4	0	0	0	0	0	7	0	11
05:30 PM	0	0	0	0	1	0	0	0	0	0	7	0	8
05:45 PM	0	0	0	0	2	0	0	0	0	0	5	0	7
Total	0	0	0	0	11	0	0	0	0	0	25	0	36
Grand Total	2	0	0	0	193	0	1	0	3	0	212	1	412
Apprch %	100	0	0	0	100	0	25	0	75	0	99.5	0.5	
Total %	0.5	0	0	0	46.8	0	0.2	0	0.7	0	51.5	0.2	

CITY TRAFFIC COUNTERS

626.991.7522

www.ctcounters.com

File Name : HaddonSheldon_2Axle
Site Code : 00000000
Start Date : 1/15/2014
Page No : 2

	Haddon Ave Southbound				Sheldon St Westbound				Haddon Ave Northbound				Sheldon St Eastbound				
Start Time	Left	Thru	Right	App. Total	Left	Thru	Right	App. Total	Left	Thru	Right	App. Total	Left	Thru	Right	App. Total	Int. Total
Peak Hour Analysis From 07:00 AM to 09:45 AM - Peak 1 of 1																	
Peak Hour for Entire Intersection Begins at 08:45 AM																	
08:45 AM	0	0	0	0	0	11	0	11	0	0	0	0	0	7	0	7	18
09:00 AM	0	0	0	0	0	**12**	0	**12**	0	0	0	0	0	6	0	6	18
09:15 AM	0	0	0	0	0	10	0	10	0	0	**1**	**1**	0	**12**	0	**12**	**23**
09:30 AM	0	0	0	0	0	9	0	9	0	0	0	0	0	9	0	9	18
Total Volume	0	0	0	0	0	42	0	42	0	0	1	1	0	34	0	34	77
% App. Total	0	0	0		0	100	0		0	0	100		0	100	0		
PHF	.000	.000	.000	.000	.000	.875	.000	.875	.000	.000	.250	.250	.000	.708	.000	.708	.837

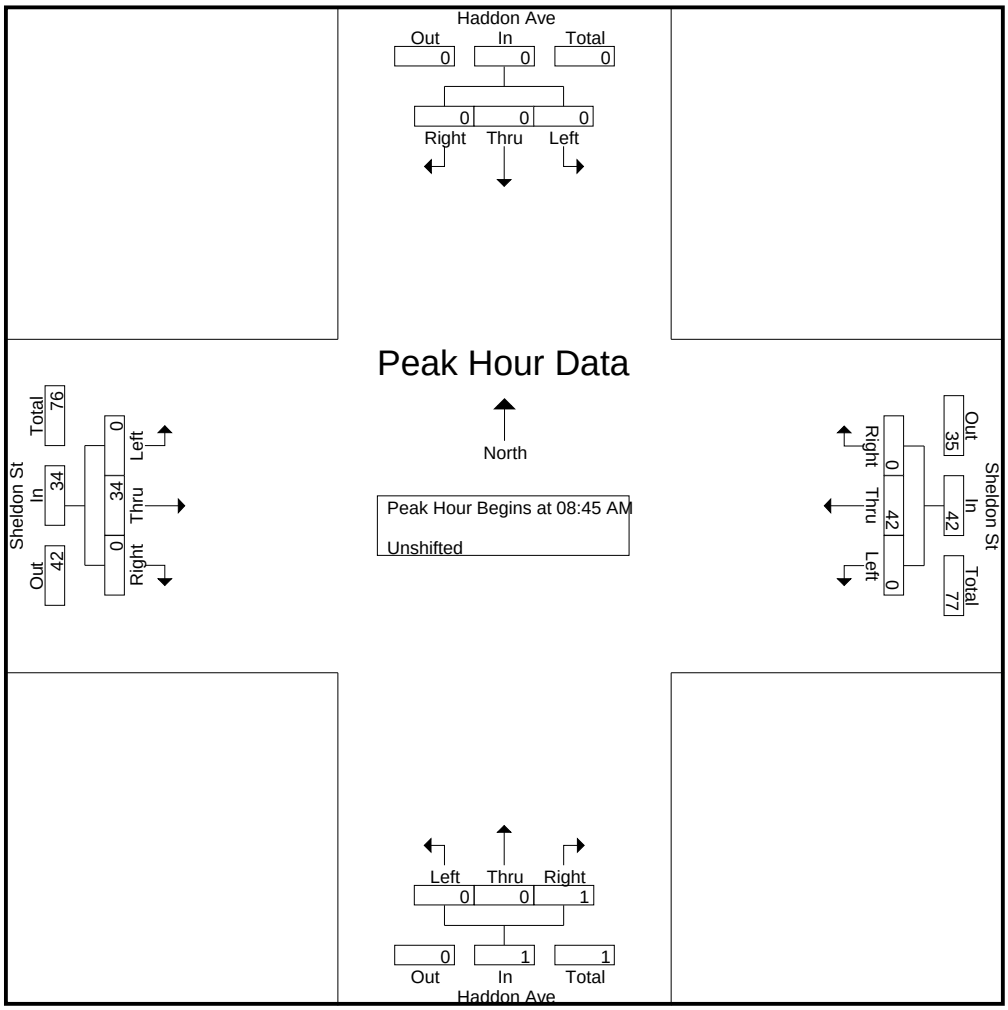

CITY TRAFFIC COUNTERS

626.991.7522

www.ctcounters.com

File Name : HaddonSheldon_2Axle
Site Code : 00000000
Start Date : 1/15/2014
Page No : 3

	Haddon Ave Southbound				Sheldon St Westbound				Haddon Ave Northbound				Sheldon St Eastbound				
Start Time	Left	Thru	Right	App. Total	Left	Thru	Right	App. Total	Left	Thru	Right	App. Total	Left	Thru	Right	App. Total	Int. Total
Peak Hour Analysis From 10:00 AM to 01:45 PM - Peak 1 of 1																	
Peak Hour for Entire Intersection Begins at 01:00 PM																	
01:00 PM	0	0	0	0	0	4	0	4	0	0	0	0	0	5	0	5	9
01:15 PM	0	0	0	0	0	7	0	7	**1**	0	**1**	**2**	0	3	0	3	12
01:30 PM	0	0	0	0	0	9	0	9	0	0	0	0	0	4	0	4	13
01:45 PM	0	0	0	0	0	**10**	0	**10**	0	0	0	0	0	**11**	0	**11**	**21**
Total Volume	0	0	0	0	0	30	0	30	1	0	1	2	0	23	0	23	55
% App. Total	0	0	0		0	100	0		50	0	50		0	100	0		
PHF	.000	.000	.000	.000	.000	.750	.000	.750	.250	.000	.250	.250	.000	.523	.000	.523	.655

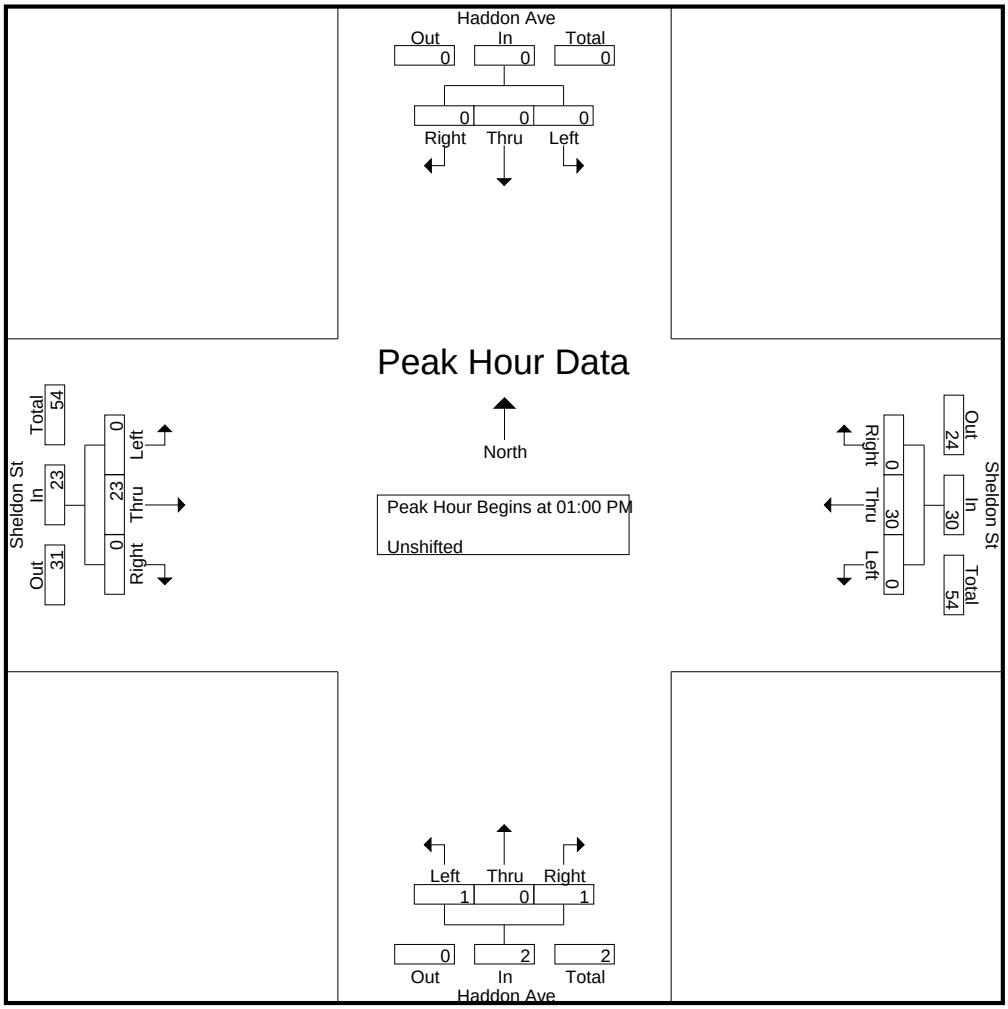

CITY TRAFFIC COUNTERS

626.991.7522

www.ctcounters.com

File Name : HaddonSheldon_2Axle
Site Code : 00000000
Start Date : 1/15/2014
Page No : 4

	Haddon Ave Southbound				Sheldon St Westbound				Haddon Ave Northbound				Sheldon St Eastbound				
Start Time	Left	Thru	Right	App. Total	Left	Thru	Right	App. Total	Left	Thru	Right	App. Total	Left	Thru	Right	App. Total	Int. Total
Peak Hour Analysis From 02:00 PM to 05:45 PM - Peak 1 of 1																	
Peak Hour for Entire Intersection Begins at 03:00 PM																	
03:00 PM	0	0	0	0	0	8	0	8	0	0	0	0	0	8	**1**	9	17
03:15 PM	0	0	0	0	0	8	0	8	0	0	**1**	**1**	0	10	0	10	19
03:30 PM	0	0	0	0	0	**10**	0	**10**	0	0	0	0	0	**11**	0	**11**	**21**
03:45 PM	0	0	0	0	0	4	0	4	0	0	0	0	0	11	0	11	15
Total Volume	0	0	0	0	0	30	0	30	0	0	1	1	0	40	1	41	72
% App. Total	0	0	0		0	100	0		0	0	100		0	97.6	2.4		
PHF	.000	.000	.000	.000	.000	.750	.000	.750	.000	.000	.250	.250	.000	.909	.250	.932	.857

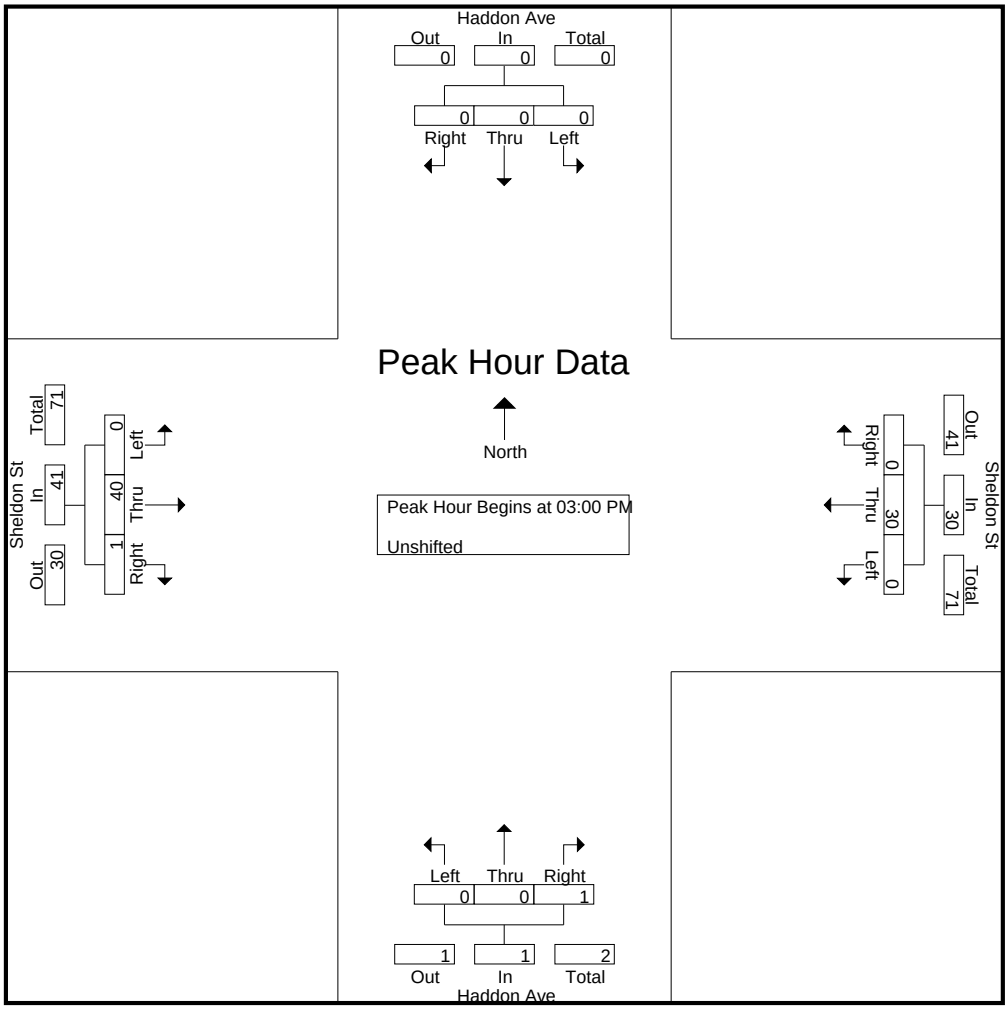

CITY TRAFFIC COUNTERS

626.991.7522

www.ctcounters.com

File Name : HaddonSheldon_3Axle
Site Code : 00000000
Start Date : 1/15/2014
Page No : 1

Groups Printed- Bank 1

	Haddon Ave Southbound			Sheldon St Westbound			Haddon Ave Northbound			Sheldon St Eastbound			
Start Time	Left	Thru	Right	Left	Thru	Right	Left	Thru	Right	Left	Thru	Right	Int. Total
07:00 AM	0	0	1	0	4	0	0	0	0	0	0	0	5
07:15 AM	0	0	0	0	3	0	0	0	0	0	1	0	4
07:30 AM	0	0	0	0	0	0	0	0	0	0	3	0	3
07:45 AM	0	0	0	0	2	0	0	0	0	0	1	0	3
Total	0	0	1	0	9	0	0	0	0	0	5	0	15
08:00 AM	0	0	0	0	4	0	0	0	0	0	4	0	8
08:15 AM	0	0	0	0	2	0	0	0	0	0	4	0	6
08:30 AM	0	0	0	0	3	0	0	0	0	0	5	0	8
08:45 AM	0	0	0	0	4	0	0	0	0	0	2	0	6
Total	0	0	0	0	13	0	0	0	0	0	15	0	28
09:00 AM	0	0	0	0	7	0	0	0	0	0	5	0	12
09:15 AM	0	0	0	0	6	0	0	0	0	0	6	0	12
09:30 AM	0	0	0	0	7	0	0	0	0	0	2	0	9
09:45 AM	0	0	0	0	6	0	0	0	0	0	4	0	10
Total	0	0	0	0	26	0	0	0	0	0	17	0	43
12:00 PM	0	0	0	0	4	0	0	0	0	0	4	0	8
12:15 PM	0	0	0	0	4	0	0	0	0	0	3	0	7
12:30 PM	0	0	0	0	3	0	0	0	0	0	2	0	5
12:45 PM	0	0	0	0	3	0	0	0	0	0	3	0	6
Total	0	0	0	0	14	0	0	0	0	0	12	0	26
01:00 PM	0	0	0	0	4	0	0	0	0	0	2	0	6
01:15 PM	0	0	0	0	5	0	0	0	0	0	3	0	8
01:30 PM	0	0	0	0	3	0	0	0	0	0	3	0	6
01:45 PM	0	0	0	0	5	0	0	0	0	0	2	0	7
Total	0	0	0	0	17	0	0	0	0	0	10	0	27
03:00 PM	0	0	0	0	2	0	0	0	0	0	5	0	7
03:15 PM	0	0	0	0	2	0	0	0	0	0	4	0	6
03:30 PM	0	0	0	0	2	0	0	0	0	0	1	0	3
03:45 PM	0	0	0	0	1	0	0	0	0	0	3	0	4
Total	0	0	0	0	7	0	0	0	0	0	13	0	20
04:00 PM	0	0	0	0	0	0	0	0	0	0	4	0	4
04:15 PM	0	0	0	0	1	0	0	0	0	0	4	0	5
04:30 PM	0	0	0	0	1	0	0	0	0	0	2	0	3
04:45 PM	0	0	0	0	1	0	0	0	0	0	3	0	4
Total	0	0	0	0	3	0	0	0	0	0	13	0	16
05:00 PM	0	0	0	0	0	0	0	0	0	0	6	0	6
05:15 PM	0	0	0	0	0	0	0	0	0	0	3	0	3
05:30 PM	0	0	0	0	0	0	0	0	0	0	2	0	2
05:45 PM	0	0	0	0	0	0	0	0	0	0	1	0	1
Total	0	0	0	0	0	0	0	0	0	0	12	0	12
Grand Total	0	0	1	0	89	0	0	0	0	0	97	0	187
Apprch %	0	0	100	0	100	0	0	0	0	0	100	0	
Total %	0	0	0.5	0	47.6	0	0	0	0	0	51.9	0	

CITY TRAFFIC COUNTERS

626.991.7522

www.ctcounters.com

File Name : HaddonSheldon_3Axle
Site Code : 00000000
Start Date : 1/15/2014
Page No : 2

	Haddon Ave Southbound				Sheldon St Westbound				Haddon Ave Northbound				Sheldon St Eastbound				
Start Time	Left	Thru	Right	App. Total	Left	Thru	Right	App. Total	Left	Thru	Right	App. Total	Left	Thru	Right	App. Total	Int. Total
Peak Hour Analysis From 07:00 AM to 09:45 AM - Peak 1 of 1																	
Peak Hour for Entire Intersection Begins at 09:00 AM																	
09:00 AM	0	0	0	0	0	**7**	0	**7**	0	0	0	0	0	5	0	5	**12**
09:15 AM	0	0	0	0	0	6	0	6	0	0	0	0	0	**6**	0	**6**	12
09:30 AM	0	0	0	0	0	7	0	7	0	0	0	0	0	2	0	2	9
09:45 AM	0	0	0	0	0	6	0	6	0	0	0	0	0	4	0	4	10
Total Volume	0	0	0	0	0	26	0	26	0	0	0	0	0	17	0	17	43
% App. Total	0	0	0		0	100	0		0	0	0		0	100	0		
PHF	.000	.000	.000	.000	.000	.929	.000	.929	.000	.000	.000	.000	.000	.708	.000	.708	.896

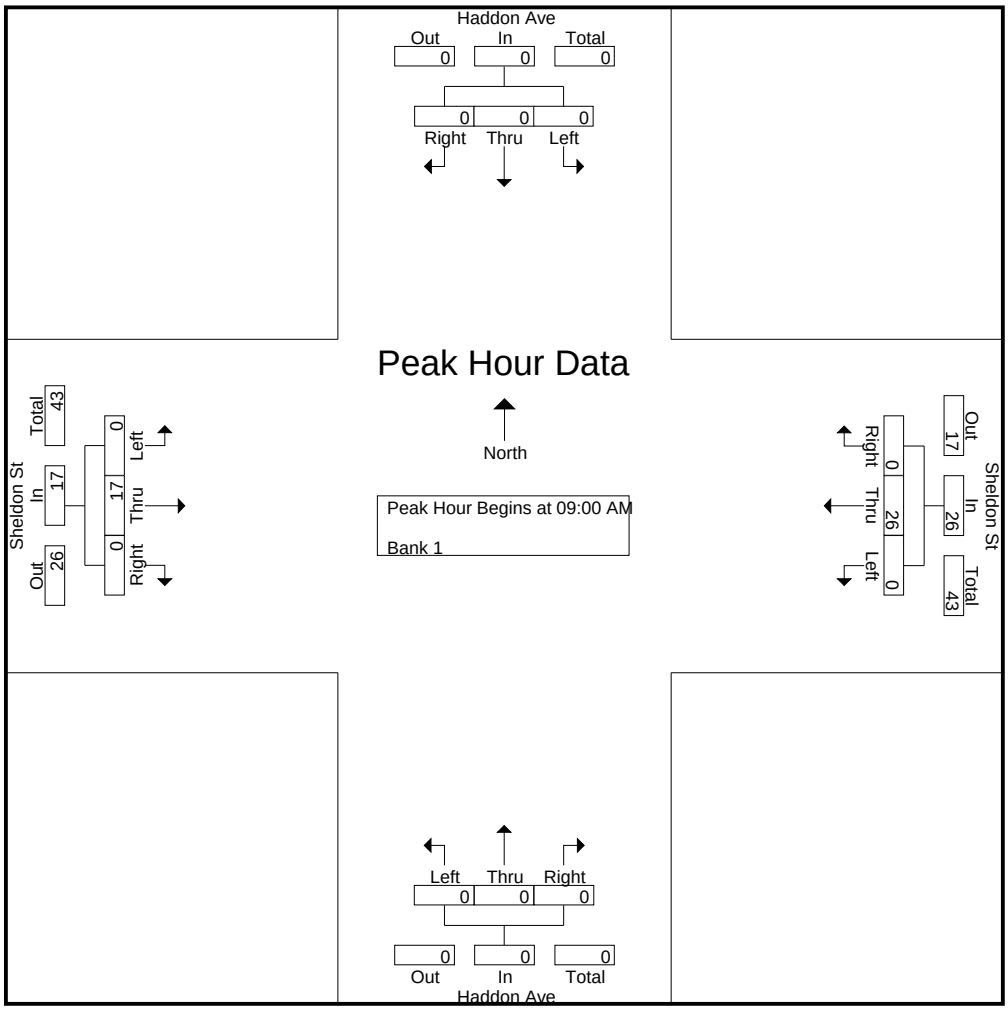

CITY TRAFFIC COUNTERS

626.991.7522

www.ctcounters.com

File Name : HaddonSheldon_3Axle
Site Code : 00000000
Start Date : 1/15/2014
Page No : 3

	Haddon Ave Southbound				Sheldon St Westbound				Haddon Ave Northbound				Sheldon St Eastbound				
Start Time	Left	Thru	Right	App. Total	Left	Thru	Right	App. Total	Left	Thru	Right	App. Total	Left	Thru	Right	App. Total	Int. Total
Peak Hour Analysis From 10:00 AM to 01:45 PM - Peak 1 of 1																	
Peak Hour for Entire Intersection Begins at 01:00 PM																	
01:00 PM	0	0	0	0	0	4	0	4	0	0	0	0	0	2	0	2	6
01:15 PM	0	0	0	0	0	**5**	0	**5**	0	0	0	0	0	**3**	0	**3**	**8**
01:30 PM	0	0	0	0	0	3	0	3	0	0	0	0	0	3	0	3	6
01:45 PM	0	0	0	0	0	5	0	5	0	0	0	0	0	2	0	2	7
Total Volume	0	0	0	0	0	17	0	17	0	0	0	0	0	10	0	10	27
% App. Total	0	0	0		0	100	0		0	0	0		0	100	0		
PHF	.000	.000	.000	.000	.000	.850	.000	.850	.000	.000	.000	.000	.000	.833	.000	.833	.844

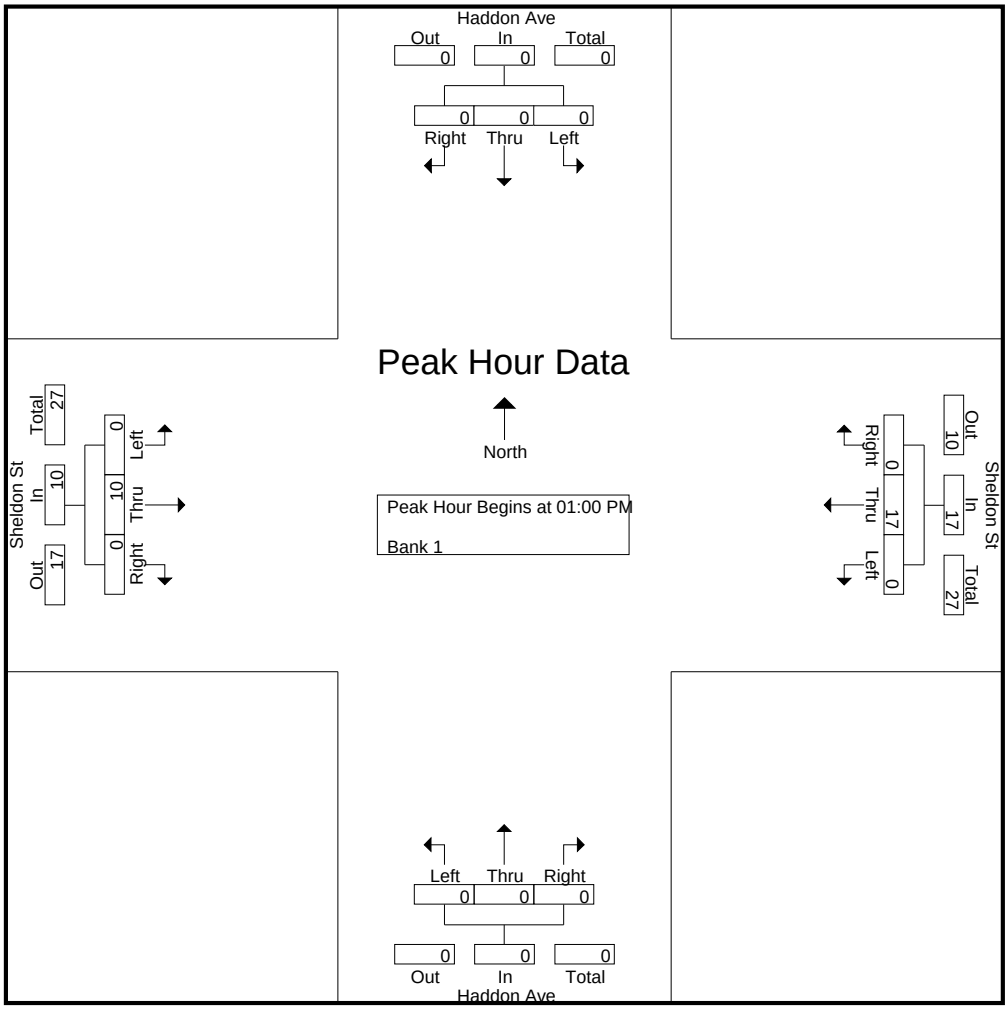

CITY TRAFFIC COUNTERS

626.991.7522

www.ctcounters.com

File Name : HaddonSheldon_3Axle
Site Code : 00000000
Start Date : 1/15/2014
Page No : 4

	Haddon Ave Southbound				Sheldon St Westbound				Haddon Ave Northbound				Sheldon St Eastbound				
Start Time	Left	Thru	Right	App. Total	Left	Thru	Right	App. Total	Left	Thru	Right	App. Total	Left	Thru	Right	App. Total	Int. Total
Peak Hour Analysis From 02:00 PM to 05:45 PM - Peak 1 of 1																	
Peak Hour for Entire Intersection Begins at 03:00 PM																	
03:00 PM	0	0	0	0	0	**2**	0	**2**	0	0	0	0	0	**5**	0	**5**	**7**
03:15 PM	0	0	0	0	0	2	0	2	0	0	0	0	0	4	0	4	6
03:30 PM	0	0	0	0	0	2	0	2	0	0	0	0	0	1	0	1	3
03:45 PM	0	0	0	0	0	1	0	1	0	0	0	0	0	3	0	3	4
Total Volume	0	0	0	0	0	7	0	7	0	0	0	0	0	13	0	13	20
% App. Total	0	0	0		0	100	0		0	0	0		0	100	0		
PHF	.000	.000	.000	.000	.000	.875	.000	.875	.000	.000	.000	.000	.000	.650	.000	.650	.714

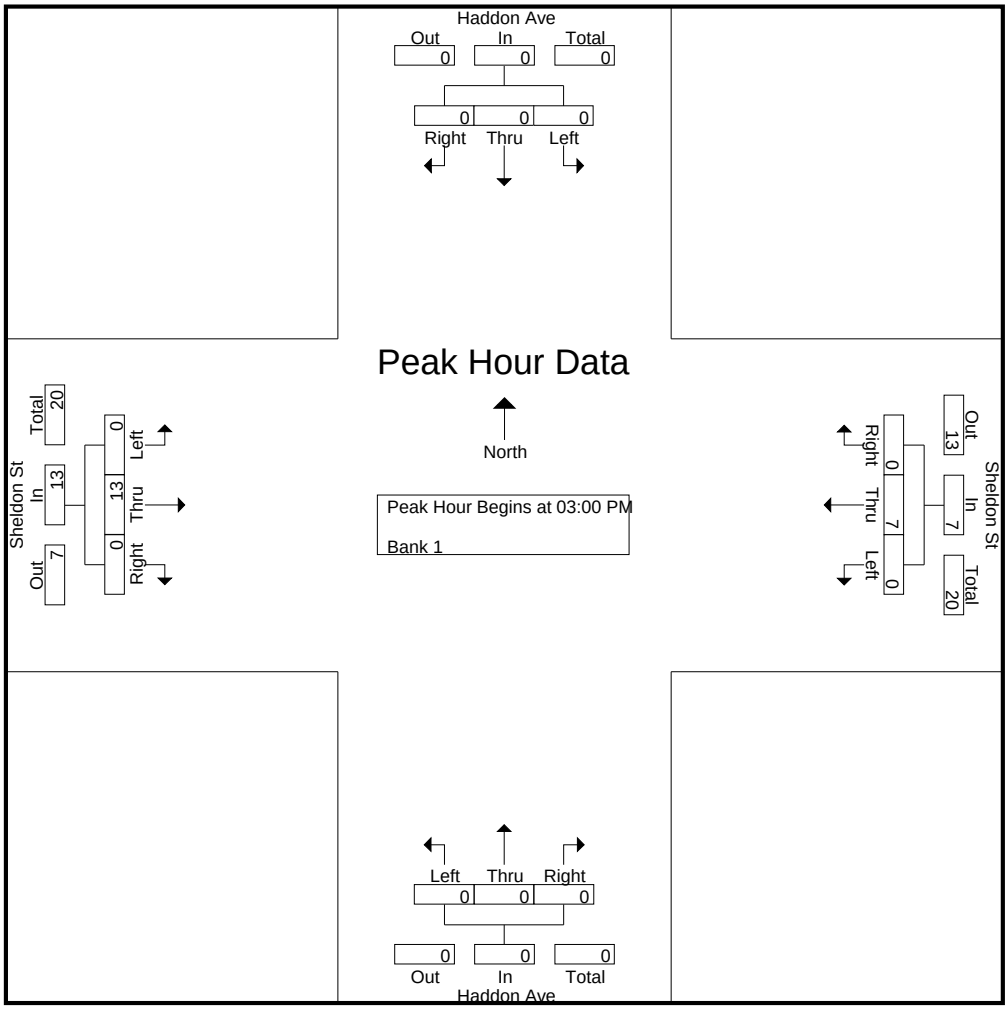

CITY TRAFFIC COUNTERS

626.991.7522

www.ctcounters.com

File Name : HaddonSheldon_4Axle
Site Code : 00000000
Start Date : 1/15/2014
Page No : 1

Groups Printed- Bank 2

	Haddon Ave Southbound			Sheldon St Westbound			Haddon Ave Northbound			Sheldon St Eastbound			
Start Time	Left	Thru	Right	Left	Thru	Right	Left	Thru	Right	Left	Thru	Right	Int. Total
07:30 AM	0	0	0	0	1	0	0	0	0	0	0	0	1
Total	0	0	0	0	1	0	0	0	0	0	0	0	1
08:00 AM	0	0	0	0	0	0	0	0	0	0	2	0	2
08:45 AM	0	0	0	0	1	0	0	0	0	0	1	0	2
Total	0	0	0	0	1	0	0	0	0	0	3	0	4
09:00 AM	0	0	0	0	0	0	0	0	0	0	1	0	1
09:15 AM	0	0	0	0	1	0	0	0	0	0	0	0	1
09:30 AM	0	0	0	0	1	0	0	0	0	0	0	0	1
09:45 AM	0	0	0	0	1	0	0	0	0	0	0	0	1
Total	0	0	0	0	3	0	0	0	0	0	1	0	4
12:15 PM	0	0	0	0	1	0	0	0	0	0	0	0	1
12:30 PM	0	0	0	0	1	0	0	0	0	0	1	0	2
12:45 PM	0	0	0	0	0	0	0	0	0	0	2	0	2
Total	0	0	0	0	2	0	0	0	0	0	3	0	5
01:00 PM	0	0	0	0	1	0	0	0	0	0	0	0	1
01:30 PM	0	0	0	0	0	0	0	0	0	0	1	0	1
Total	0	0	0	0	1	0	0	0	0	0	1	0	2
03:00 PM	0	0	0	0	0	0	0	0	0	0	1	0	1
03:45 PM	0	0	0	0	0	0	0	0	0	0	1	0	1
Total	0	0	0	0	0	0	0	0	0	0	2	0	2
04:30 PM	0	0	0	0	0	0	0	0	0	0	1	0	1
Total	0	0	0	0	0	0	0	0	0	0	1	0	1
05:15 PM	0	0	0	0	0	0	0	0	0	0	1	0	1
05:45 PM	0	0	0	0	0	0	0	0	0	0	1	0	1
Total	0	0	0	0	0	0	0	0	0	0	2	0	2
Grand Total	0	0	0	0	8	0	0	0	0	0	13	0	21
Apprch %	0	0	0	0	100	0	0	0	0	0	100	0	
Total %	0	0	0	0	38.1	0	0	0	0	0	61.9	0	

CITY TRAFFIC COUNTERS

626.991.7522

www.ctcounters.com

File Name : HaddonSheldon_4Axle
Site Code : 00000000
Start Date : 1/15/2014
Page No : 2

	Haddon Ave Southbound				Sheldon St Westbound				Haddon Ave Northbound				Sheldon St Eastbound				
Start Time	Left	Thru	Right	App. Total	Left	Thru	Right	App. Total	Left	Thru	Right	App. Total	Left	Thru	Right	App. Total	Int. Total
Peak Hour Analysis From 07:00 AM to 09:45 AM - Peak 1 of 1																	
Peak Hour for Entire Intersection Begins at 08:45 AM																	
08:45 AM	0	0	0	0	0	**1**	0	**1**	0	0	0	0	0	**1**	0	**1**	**2**
09:00 AM	0	0	0	0	0	0	0	0	0	0	0	0	0	1	0	1	1
09:15 AM	0	0	0	0	0	1	0	1	0	0	0	0	0	0	0	0	1
09:30 AM	0	0	0	0	0	1	0	1	0	0	0	0	0	0	0	0	1
Total Volume	0	0	0	0	0	3	0	3	0	0	0	0	0	2	0	2	5
% App. Total	0	0	0		0	100	0		0	0	0		0	100	0		
PHF	.000	.000	.000	.000	.000	.750	.000	.750	.000	.000	.000	.000	.000	.500	.000	.500	.625

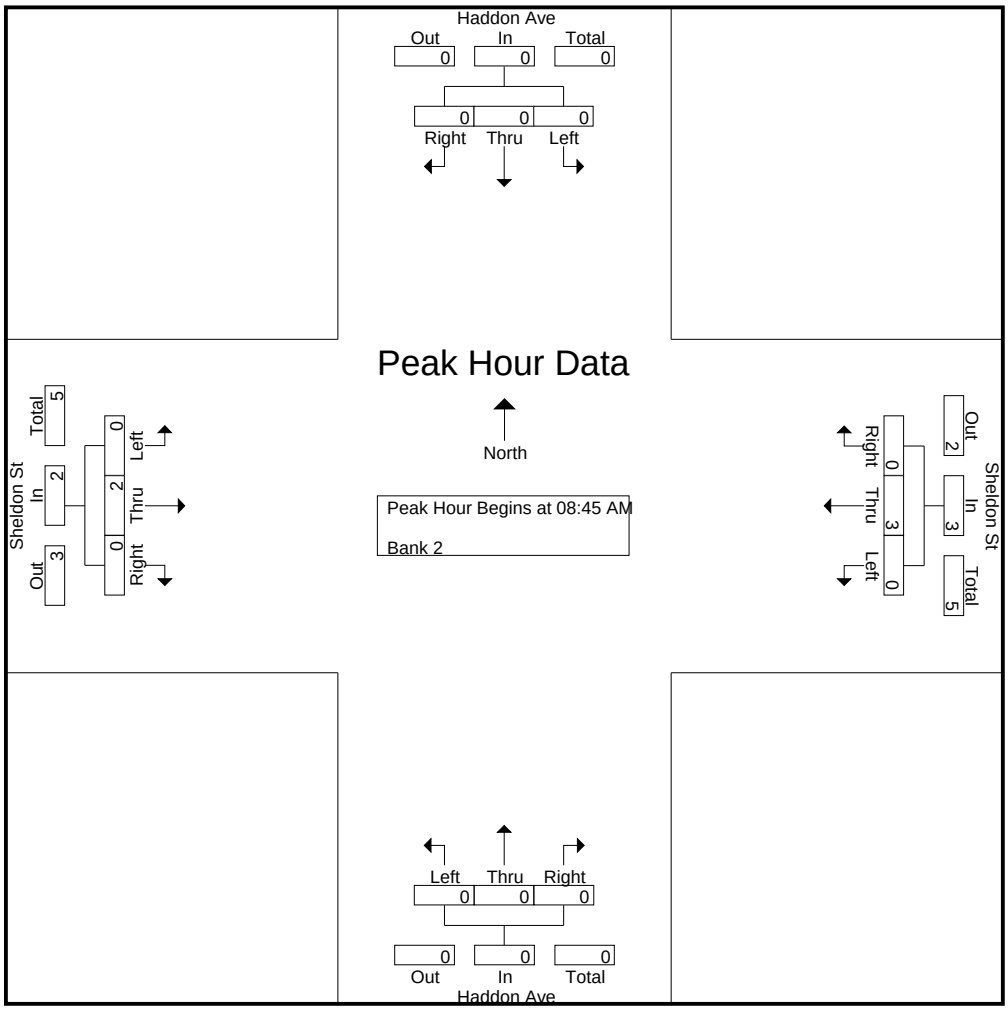

CITY TRAFFIC COUNTERS

626.991.7522

www.ctcounters.com

File Name : HaddonSheldon_4Axle
Site Code : 00000000
Start Date : 1/15/2014
Page No : 3

	Haddon Ave Southbound				Sheldon St Westbound				Haddon Ave Northbound				Sheldon St Eastbound				
Start Time	Left	Thru	Right	App. Total	Left	Thru	Right	App. Total	Left	Thru	Right	App. Total	Left	Thru	Right	App. Total	Int. Total
Peak Hour Analysis From 10:00 AM to 01:45 PM - Peak 1 of 1																	
Peak Hour for Entire Intersection Begins at 12:15 PM																	
12:15 PM	0	0	0	0	0	**1**	0	**1**	0	0	0	0	0	0	0	0	1
12:30 PM	0	0	0	0	0	1	0	1	0	0	0	0	0	1	0	1	**2**
12:45 PM	0	0	0	0	0	0	0	0	0	0	0	0	0	**2**	0	**2**	2
01:00 PM	0	0	0	0	0	1	0	1	0	0	0	0	0	0	0	0	1
Total Volume	0	0	0	0	0	3	0	3	0	0	0	0	0	3	0	3	6
% App. Total	0	0	0		0	100	0		0	0	0		0	100	0		
PHF	.000	.000	.000	.000	.000	.750	.000	.750	.000	.000	.000	.000	.000	.375	.000	.375	.750

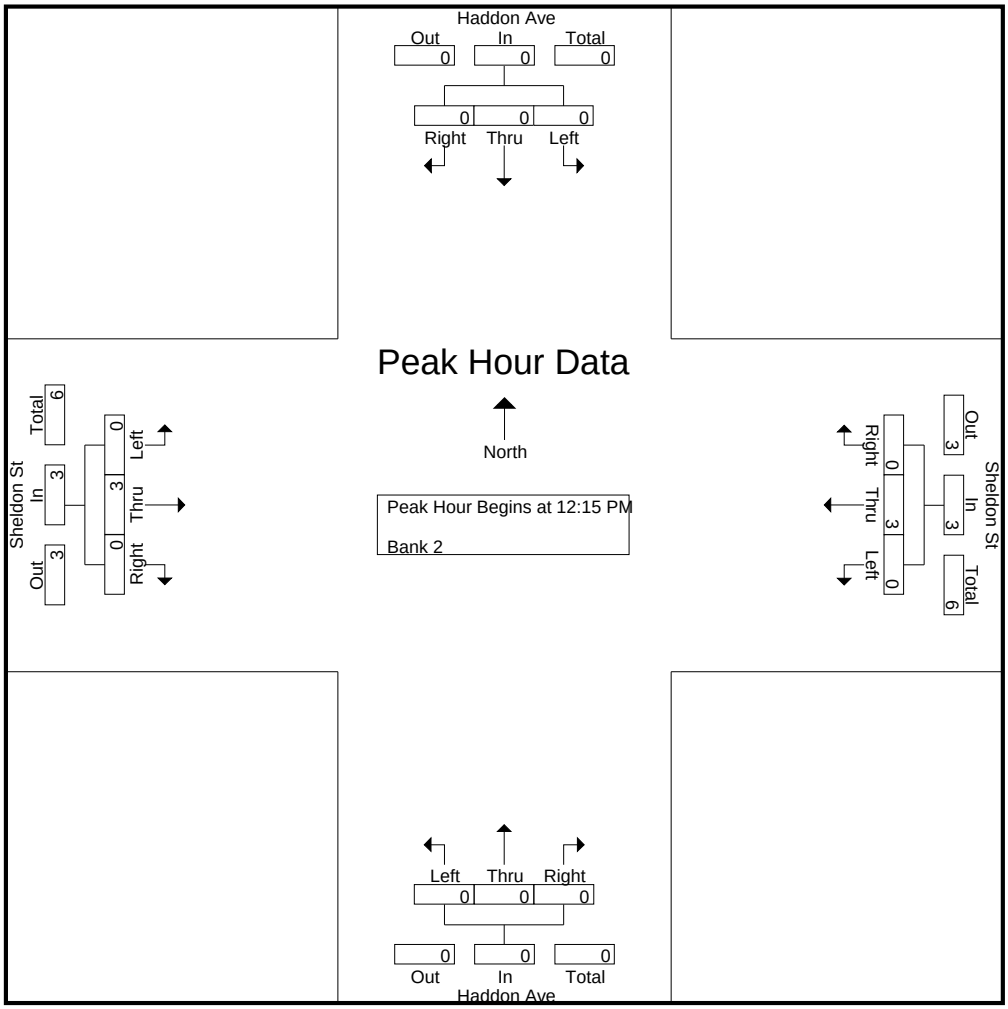

CITY TRAFFIC COUNTERS

626.991.7522

www.ctcounters.com

File Name : HaddonSheldon_4Axle
Site Code : 00000000
Start Date : 1/15/2014
Page No : 4

	Haddon Ave Southbound				Sheldon St Westbound				Haddon Ave Northbound				Sheldon St Eastbound				
Start Time	Left	Thru	Right	App. Total	Left	Thru	Right	App. Total	Left	Thru	Right	App. Total	Left	Thru	Right	App. Total	Int. Total
Peak Hour Analysis From 02:00 PM to 05:45 PM - Peak 1 of 1																	
Peak Hour for Entire Intersection Begins at 03:00 PM																	
03:00 PM	0	0	0	0	0	0	0	0	0	0	0	0	0	**1**	0	**1**	**1**
03:15 PM	0	0	0	0	0	0	0	0	0	0	0	0	0	0	0	0	0
03:30 PM	0	0	0	0	0	0	0	0	0	0	0	0	0	0	0	0	0
03:45 PM	0	0	0	0	0	0	0	0	0	0	0	0	0	1	0	1	1
Total Volume	0	0	0	0	0	0	0	0	0	0	0	0	0	2	0	2	2
% App. Total	0	0	0		0	0	0		0	0	0		0	100	0		
PHF	.000	.000	.000	.000	.000	.000	.000	.000	.000	.000	.000	.000	.000	.500	.000	.500	.500

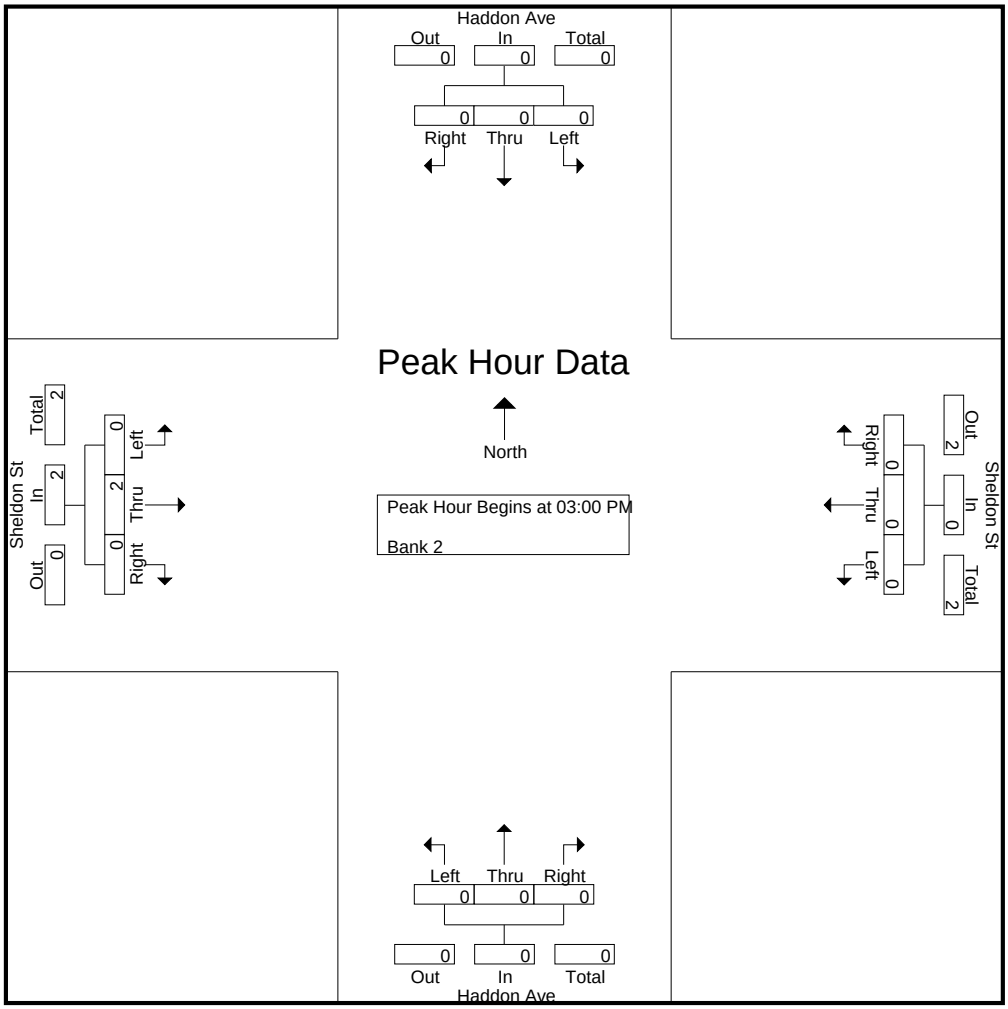

CITY TRAFFIC COUNTERS

626.991.7522

www.ctcounters.com

File Name : HaddonSheldon_5Axle
Site Code : 00000000
Start Date : 1/15/2014
Page No : 1

Groups Printed- Bank 2

	Haddon Ave Southbound			Sheldon St Westbound			Haddon Ave Northbound			Sheldon St Eastbound			
Start Time	Left	Thru	Right	Left	Thru	Right	Left	Thru	Right	Left	Thru	Right	Int. Total
07:00 AM	0	0	0	0	2	0	0	0	0	0	4	0	6
07:15 AM	0	0	0	0	0	0	0	0	0	0	1	0	1
07:30 AM	0	0	0	0	2	0	0	0	0	0	1	0	3
07:45 AM	0	0	0	0	1	0	0	0	0	0	1	0	2
Total	0	0	0	0	5	0	0	0	0	0	7	0	12
08:00 AM	0	0	0	0	2	0	0	0	0	0	5	0	7
08:15 AM	0	0	0	0	1	0	0	0	0	0	1	0	2
08:30 AM	0	0	0	0	2	0	0	0	0	0	2	0	4
08:45 AM	0	0	0	0	3	0	0	0	0	0	2	0	5
Total	0	0	0	0	8	0	0	0	0	0	10	0	18
09:00 AM	0	0	0	0	3	0	0	0	0	0	2	0	5
09:15 AM	0	0	0	0	3	0	0	0	0	0	1	0	4
09:30 AM	0	0	0	0	4	0	0	0	0	0	4	0	8
09:45 AM	0	0	0	0	3	0	0	0	0	0	2	0	5
Total	0	0	0	0	13	0	0	0	0	0	9	0	22
12:00 PM	0	0	0	0	5	0	0	0	0	0	2	0	7
12:15 PM	0	0	0	0	0	0	0	0	0	0	4	0	4
12:30 PM	0	0	0	0	3	0	0	0	0	0	4	0	7
12:45 PM	0	0	0	0	2	0	0	0	0	0	2	0	4
Total	0	0	0	0	10	0	0	0	0	0	12	0	22
01:00 PM	0	0	0	0	0	0	0	0	0	0	2	0	2
01:15 PM	0	0	0	0	1	0	0	0	0	0	2	0	3
01:30 PM	0	0	0	0	0	0	0	0	0	0	1	0	1
01:45 PM	0	0	0	0	3	0	0	0	0	0	3	0	6
Total	0	0	0	0	4	0	0	0	0	0	8	0	12
03:00 PM	0	0	0	0	1	0	0	0	0	0	2	0	3
03:15 PM	0	0	0	0	1	0	0	0	0	0	2	0	3
03:30 PM	0	0	0	0	1	0	0	0	0	0	1	0	2
03:45 PM	0	0	0	0	0	0	0	0	0	0	1	0	1
Total	0	0	0	0	3	0	0	0	0	0	6	0	9
04:30 PM	0	0	0	0	2	0	0	0	0	0	0	0	2
Total	0	0	0	0	2	0	0	0	0	0	0	0	2
05:45 PM	0	0	0	0	0	0	0	0	0	0	1	0	1
Total	0	0	0	0	0	0	0	0	0	0	1	0	1
Grand Total	0	0	0	0	45	0	0	0	0	0	53	0	98
Apprch %	0	0	0	0	100	0	0	0	0	0	100	0	
Total %	0	0	0	0	45.9	0	0	0	0	0	54.1	0	

CITY TRAFFIC COUNTERS

626.991.7522

www.ctcounters.com

File Name : HaddonSheldon_5Axle
Site Code : 00000000
Start Date : 1/15/2014
Page No : 2

	Haddon Ave Southbound				Sheldon St Westbound				Haddon Ave Northbound				Sheldon St Eastbound				
Start Time	Left	Thru	Right	App. Total	Left	Thru	Right	App. Total	Left	Thru	Right	App. Total	Left	Thru	Right	App. Total	Int. Total
Peak Hour Analysis From 07:00 AM to 09:45 AM - Peak 1 of 1																	
Peak Hour for Entire Intersection Begins at 08:45 AM																	
08:45 AM	0	0	0	0	0	3	0	3	0	0	0	0	0	2	0	2	5
09:00 AM	0	0	0	0	0	3	0	3	0	0	0	0	0	2	0	2	5
09:15 AM	0	0	0	0	0	3	0	3	0	0	0	0	0	1	0	1	4
09:30 AM	0	0	0	0	0	**4**	0	**4**	0	0	0	0	0	**4**	0	**4**	**8**
Total Volume	0	0	0	0	0	13	0	13	0	0	0	0	0	9	0	9	22
% App. Total	0	0	0		0	100	0		0	0	0		0	100	0		
PHF	.000	.000	.000	.000	.000	.813	.000	.813	.000	.000	.000	.000	.000	.563	.000	.563	.688

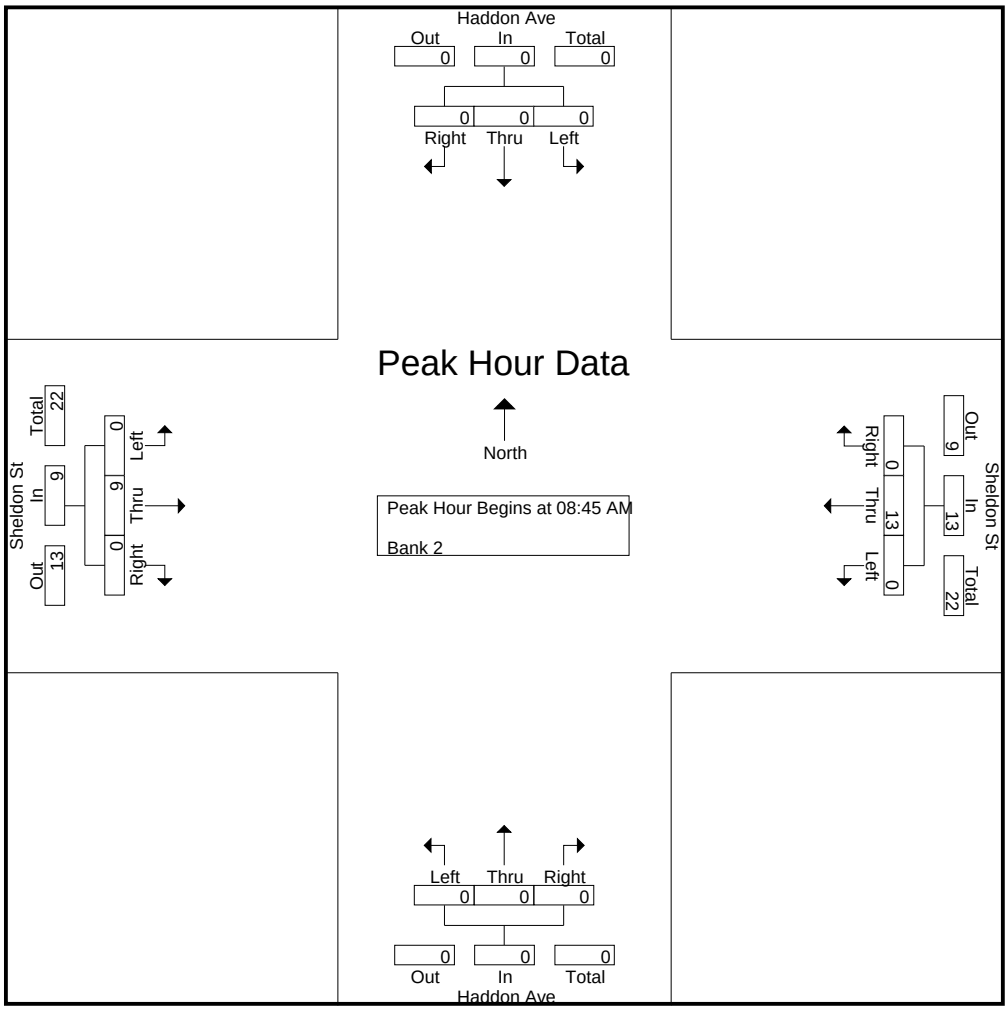

CITY TRAFFIC COUNTERS

626.991.7522

www.ctcounters.com

File Name : HaddonSheldon_5Axle
Site Code : 00000000
Start Date : 1/15/2014
Page No : 3

	Haddon Ave Southbound				Sheldon St Westbound				Haddon Ave Northbound				Sheldon St Eastbound				
Start Time	Left	Thru	Right	App. Total	Left	Thru	Right	App. Total	Left	Thru	Right	App. Total	Left	Thru	Right	App. Total	Int. Total
Peak Hour Analysis From 10:00 AM to 01:45 PM - Peak 1 of 1																	
Peak Hour for Entire Intersection Begins at 12:00 PM																	
12:00 PM	0	0	0	0	0	**5**	0	**5**	0	0	0	0	0	2	0	2	**7**
12:15 PM	0	0	0	0	0	0	0	0	0	0	0	0	0	**4**	0	**4**	4
12:30 PM	0	0	0	0	0	3	0	3	0	0	0	0	0	4	0	4	7
12:45 PM	0	0	0	0	0	2	0	2	0	0	0	0	0	2	0	2	4
Total Volume	0	0	0	0	0	10	0	10	0	0	0	0	0	12	0	12	22
% App. Total	0	0	0		0	100	0		0	0	0		0	100	0		
PHF	.000	.000	.000	.000	.000	.500	.000	.500	.000	.000	.000	.000	.000	.750	.000	.750	.786

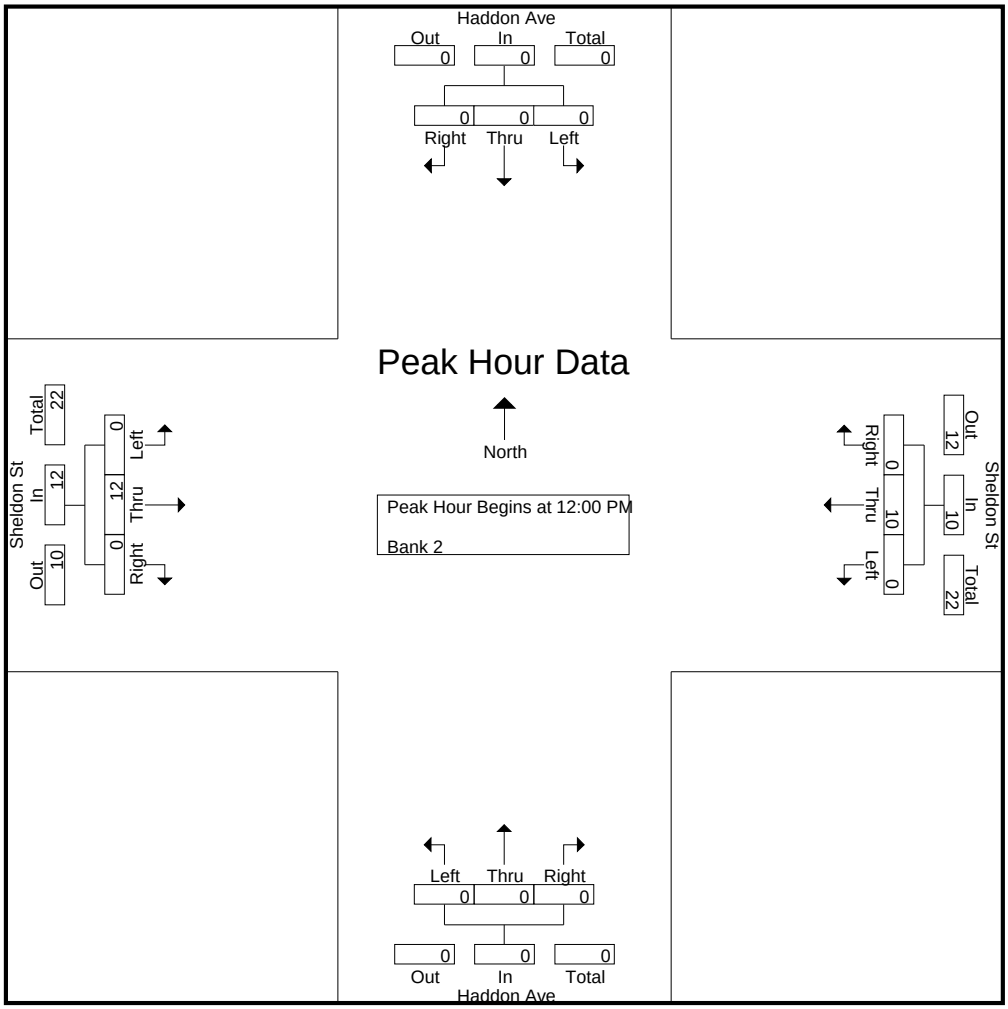

CITY TRAFFIC COUNTERS

626.991.7522

www.ctcounters.com

File Name : HaddonSheldon_5Axle
Site Code : 00000000
Start Date : 1/15/2014
Page No : 4

	Haddon Ave Southbound				Sheldon St Westbound				Haddon Ave Northbound				Sheldon St Eastbound				
Start Time	Left	Thru	Right	App. Total	Left	Thru	Right	App. Total	Left	Thru	Right	App. Total	Left	Thru	Right	App. Total	Int. Total
Peak Hour Analysis From 02:00 PM to 05:45 PM - Peak 1 of 1																	
Peak Hour for Entire Intersection Begins at 03:00 PM																	
03:00 PM	0	0	0	0	0	**1**	0	**1**	0	0	0	0	0	**2**	0	**2**	**3**
03:15 PM	0	0	0	0	0	1	0	1	0	0	0	0	0	2	0	2	3
03:30 PM	0	0	0	0	0	1	0	1	0	0	0	0	0	1	0	1	2
03:45 PM	0	0	0	0	0	0	0	0	0	0	0	0	0	1	0	1	1
Total Volume	0	0	0	0	0	3	0	3	0	0	0	0	0	6	0	6	9
% App. Total	0	0	0		0	100	0		0	0	0		0	100	0		
PHF	.000	.000	.000	.000	.000	.750	.000	.750	.000	.000	.000	.000	.000	.750	.000	.750	.750

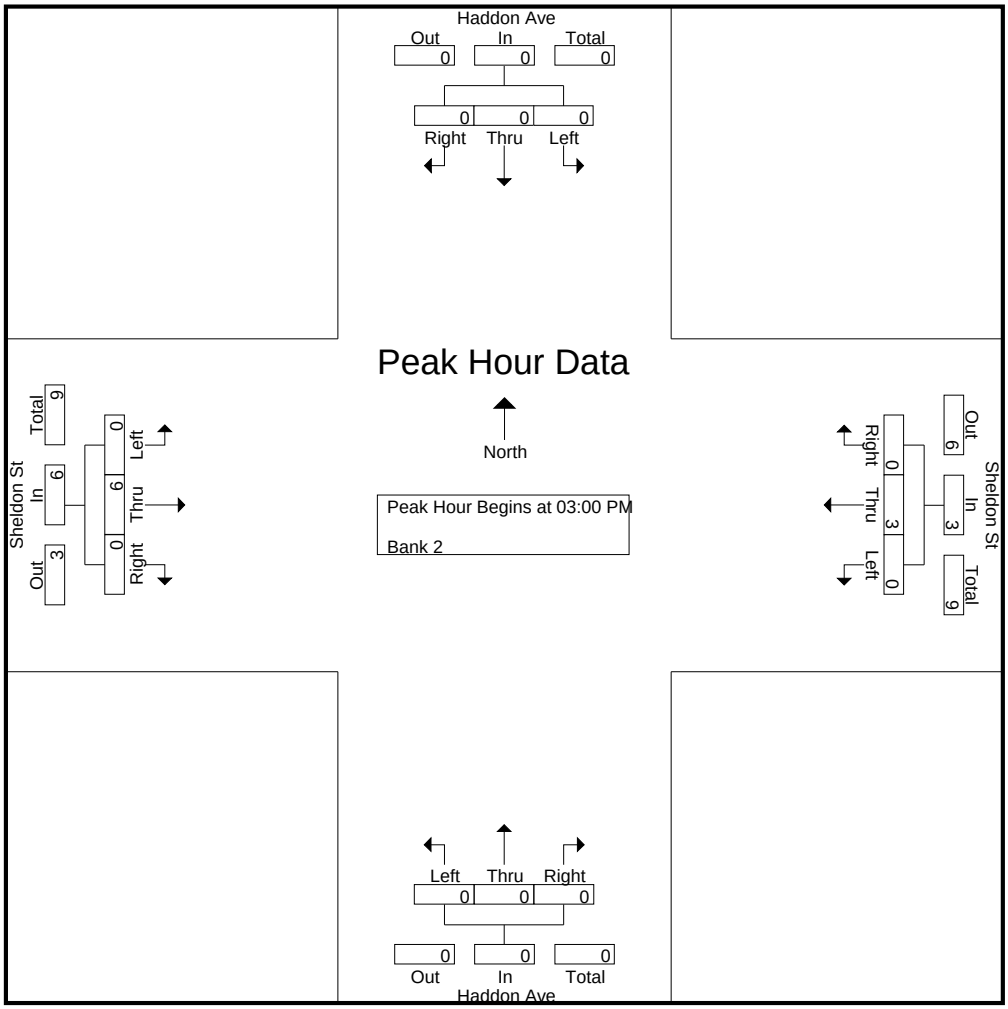

CITY TRAFFIC COUNTERS

626.991.7522

www.ctcounters.com

File Name : TelfairSheldon
Site Code : 00000000
Start Date : 1/15/2014
Page No : 1

Groups Printed- Unshifted

	Telfair Ave Southbound			Sheldon St Westbound			Telfair Ave Northbound			Sheldon St Eastbound			
Start Time	Left	Thru	Right	Left	Thru	Right	Left	Thru	Right	Left	Thru	Right	Int. Total
07:00 AM	0	2	11	9	128	0	25	2	8	1	78	10	274
07:15 AM	1	2	9	20	168	4	34	4	11	2	100	26	381
07:30 AM	4	17	11	35	173	4	45	5	11	0	97	30	432
07:45 AM	5	22	6	41	139	15	18	5	15	0	128	52	446
Total	10	43	37	105	608	23	122	16	45	3	403	118	1533
08:00 AM	1	4	4	33	161	6	27	4	19	3	108	33	403
08:15 AM	0	3	1	35	144	0	28	0	7	0	96	18	332
08:30 AM	0	1	1	3	110	0	18	2	4	1	82	7	229
08:45 AM	0	0	1	2	85	1	6	0	1	3	106	6	211
Total	1	8	7	73	500	7	79	6	31	7	392	64	1175
09:00 AM	0	0	2	4	82	0	12	0	3	0	77	8	188
09:15 AM	0	0	3	5	94	1	6	0	1	0	92	15	217
09:30 AM	0	0	6	2	88	1	14	0	2	0	88	4	205
09:45 AM	3	0	7	3	85	2	16	0	3	0	92	5	216
Total	3	0	18	14	349	4	48	0	9	0	349	32	826
12:00 PM	0	0	3	4	86	5	9	0	2	3	79	10	201
12:15 PM	0	1	1	6	85	1	5	1	7	1	98	8	214
12:30 PM	0	0	2	3	106	3	11	1	2	1	107	8	244
12:45 PM	0	2	4	3	84	14	6	2	3	1	91	9	219
Total	0	3	10	16	361	23	31	4	14	6	375	35	878
01:00 PM	0	0	5	11	75	5	11	0	5	2	106	4	224
01:15 PM	0	0	2	4	97	4	6	1	6	2	113	9	244
01:30 PM	0	0	0	3	96	0	6	1	1	0	115	6	228
01:45 PM	0	1	2	6	103	2	10	0	5	2	96	6	233
Total	0	1	9	24	371	11	33	2	17	6	430	25	929
03:00 PM	0	1	9	6	138	0	33	3	10	0	124	31	355
03:15 PM	0	0	3	10	130	4	15	2	10	4	157	12	347
03:30 PM	0	2	3	17	137	2	16	2	6	3	177	15	380
03:45 PM	1	1	4	22	121	1	26	0	20	10	155	21	382
Total	1	4	19	55	526	7	90	7	46	17	613	79	1464
04:00 PM	0	0	2	20	114	2	27	1	20	2	158	23	369
04:15 PM	0	1	2	5	104	0	21	0	13	2	138	26	312
04:30 PM	0	1	7	9	127	3	15	2	15	1	154	20	354
04:45 PM	0	2	5	17	148	3	23	2	15	2	157	22	396
Total	0	4	16	51	493	8	86	5	63	7	607	91	1431
05:00 PM	2	2	12	12	150	2	33	0	10	5	148	33	409
05:15 PM	2	1	3	11	117	1	16	1	7	2	130	29	320
05:30 PM	1	7	5	12	119	1	18	1	7	9	119	24	323
05:45 PM	1	4	3	9	93	1	14	3	7	3	128	20	286
Total	6	14	23	44	479	5	81	5	31	19	525	106	1338
Grand Total	21	77	139	382	3687	88	570	45	256	65	3694	550	9574
Apprch %	8.9	32.5	58.6	9.2	88.7	2.1	65.4	5.2	29.4	1.5	85.7	12.8	
Total %	0.2	0.8	1.5	4	38.5	0.9	6	0.5	2.7	0.7	38.6	5.7	

CITY TRAFFIC COUNTERS

626.991.7522

www.ctcounters.com

File Name : TelfairSheldon
Site Code : 00000000
Start Date : 1/15/2014
Page No : 2

	Telfair Ave Southbound				Sheldon St Westbound				Telfair Ave Northbound				Sheldon St Eastbound				
Start Time	Left	Thru	Right	App. Total	Left	Thru	Right	App. Total	Left	Thru	Right	App. Total	Left	Thru	Right	App. Total	Int. Total
Peak Hour Analysis From 07:00 AM to 09:45 AM - Peak 1 of 1																	
Peak Hour for Entire Intersection Begins at 07:15 AM																	
07:15 AM	1	2	9	12	20	168	4	192	34	4	11	49	2	100	26	128	381
07:30 AM	4	17	**11**	32	35	**173**	4	**212**	**45**	**5**	11	**61**	0	97	30	127	432
07:45 AM	**5**	**22**	6	**33**	**41**	139	**15**	195	18	5	15	38	0	**128**	**52**	**180**	**446**
08:00 AM	1	4	4	9	33	161	6	200	27	4	**19**	50	**3**	108	33	144	403
Total Volume	11	45	30	86	129	641	29	799	124	18	56	198	5	433	141	579	1662
% App. Total	12.8	52.3	34.9		16.1	80.2	3.6		62.6	9.1	28.3		0.9	74.8	24.4		
PHF	.550	.511	.682	.652	.787	.926	.483	.942	.689	.900	.737	.811	.417	.846	.678	.804	.932

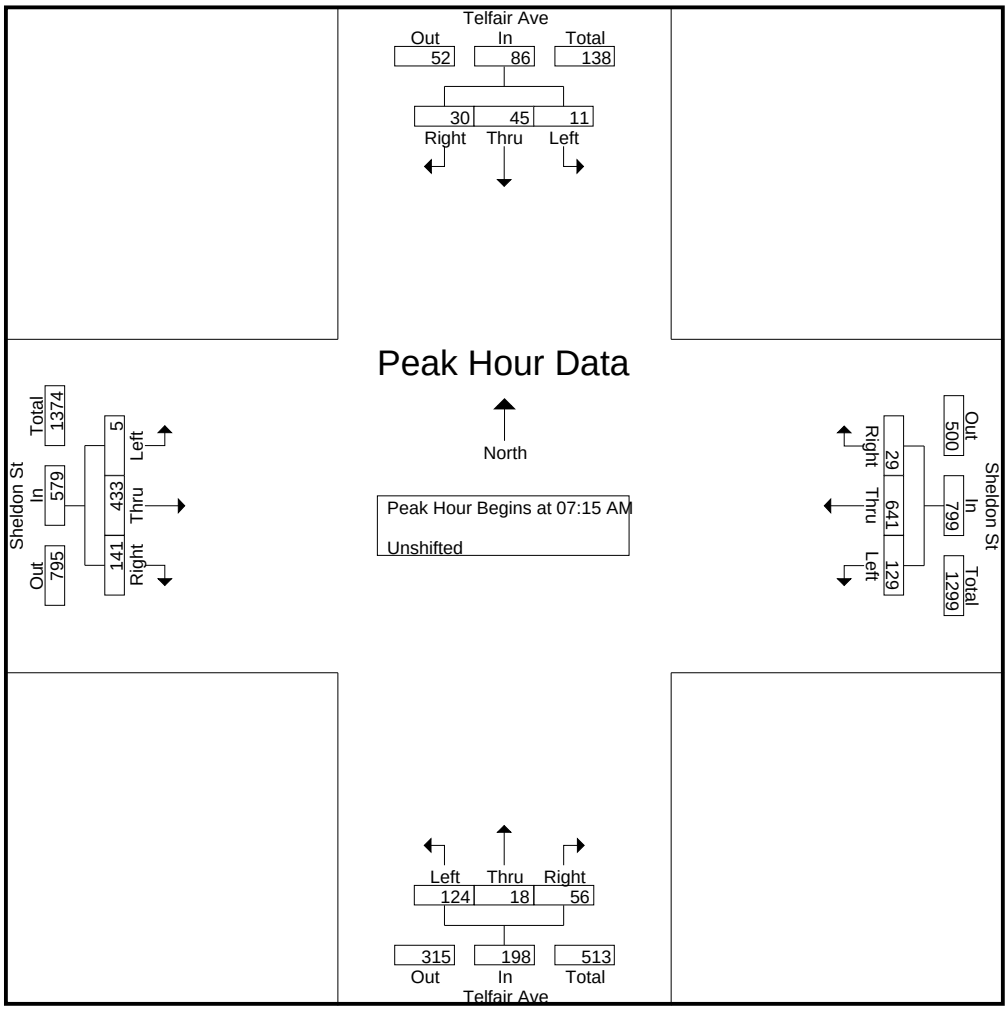

CITY TRAFFIC COUNTERS

626.991.7522

www.ctcounters.com

File Name : TelfairSheldon
Site Code : 00000000
Start Date : 1/15/2014
Page No : 3

	Telfair Ave Southbound				Sheldon St Westbound				Telfair Ave Northbound				Sheldon St Eastbound				
Start Time	Left	Thru	Right	App. Total	Left	Thru	Right	App. Total	Left	Thru	Right	App. Total	Left	Thru	Right	App. Total	Int. Total
Peak Hour Analysis From 10:00 AM to 01:45 PM - Peak 1 of 1																	
Peak Hour for Entire Intersection Begins at 12:30 PM																	
12:30 PM	0	0	2	2	3	**106**	3	**112**	**11**	1	2	14	1	107	8	116	**244**
12:45 PM	0	**2**	4	**6**	3	84	**14**	101	6	**2**	3	11	1	91	**9**	101	219
01:00 PM	0	0	**5**	5	**11**	75	5	91	11	0	5	**16**	**2**	106	4	112	224
01:15 PM	0	0	2	2	4	97	4	105	6	1	**6**	13	2	**113**	9	**124**	244
Total Volume	0	2	13	15	21	362	26	409	34	4	16	54	6	417	30	453	931
% App. Total	0	13.3	86.7		5.1	88.5	6.4		63	7.4	29.6		1.3	92.1	6.6		
PHF	.000	.250	.650	.625	.477	.854	.464	.913	.773	.500	.667	.844	.750	.923	.833	.913	.954

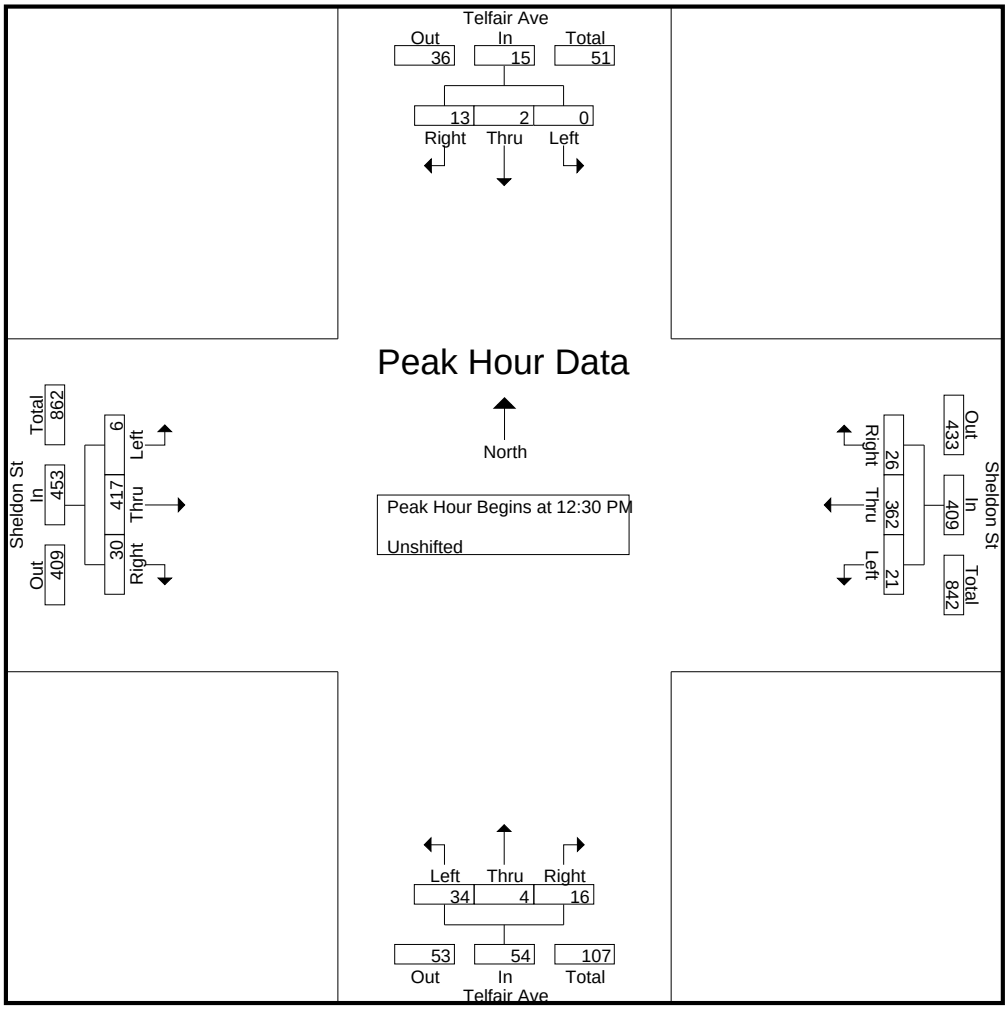

CITY TRAFFIC COUNTERS

626.991.7522

www.ctcounters.com

File Name : TelfairSheldon
Site Code : 00000000
Start Date : 1/15/2014
Page No : 4

	Telfair Ave Southbound				Sheldon St Westbound				Telfair Ave Northbound				Sheldon St Eastbound				
Start Time	Left	Thru	Right	App. Total	Left	Thru	Right	App. Total	Left	Thru	Right	App. Total	Left	Thru	Right	App. Total	Int. Total
Peak Hour Analysis From 02:00 PM to 05:45 PM - Peak 1 of 1																	
Peak Hour for Entire Intersection Begins at 04:30 PM																	
04:30 PM	0	1	7	8	9	127	**3**	139	15	**2**	**15**	32	1	154	20	175	354
04:45 PM	0	**2**	5	7	**17**	148	3	**168**	23	2	15	40	2	**157**	22	181	396
05:00 PM	**2**	2	**12**	**16**	12	**150**	2	164	**33**	0	10	**43**	**5**	148	**33**	**186**	**409**
05:15 PM	2	1	3	6	11	117	1	129	16	1	7	24	2	130	29	161	320
Total Volume	4	6	27	37	49	542	9	600	87	5	47	139	10	589	104	703	1479
% App. Total	10.8	16.2	73		8.2	90.3	1.5		62.6	3.6	33.8		1.4	83.8	14.8		
PHF	.500	.750	.563	.578	.721	.903	.750	.893	.659	.625	.783	.808	.500	.938	.788	.945	.904

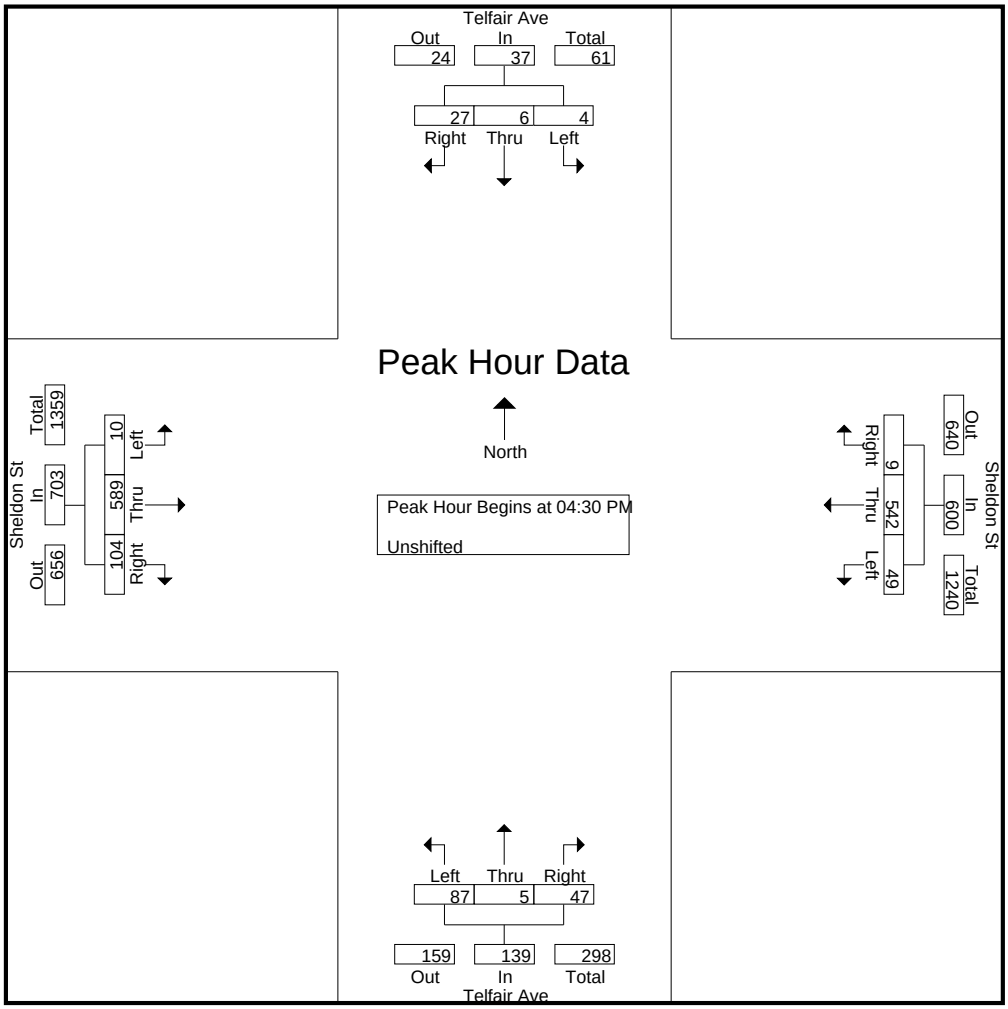

CITY TRAFFIC COUNTERS

626.991.7522

www.ctcounters.com

File Name : TelfairSheldon_MC
Site Code : 00000000
Start Date : 1/15/2014
Page No : 1

Groups Printed- Bank 2

	Telfair Ave Southbound			Sheldon St Westbound			Telfair Ave Northbound			Sheldon St Eastbound			
Start Time	Left	Thru	Right	Left	Thru	Right	Left	Thru	Right	Left	Thru	Right	Int. Total
07:15 AM	0	0	0	0	2	0	0	0	0	0	0	0	2
07:30 AM	0	0	0	0	0	0	0	0	0	0	1	0	1
07:45 AM	0	0	0	0	0	0	0	0	0	0	1	0	1
Total	0	0	0	0	2	0	0	0	0	0	2	0	4
08:00 AM	0	0	0	0	0	0	0	0	0	0	1	0	1
08:15 AM	0	0	0	0	2	0	0	0	0	0	1	0	3
Total	0	0	0	0	2	0	0	0	0	0	2	0	4
09:15 AM	0	0	0	0	0	0	0	0	0	0	1	0	1
09:45 AM	0	0	0	0	2	0	0	0	0	0	0	0	2
Total	0	0	0	0	2	0	0	0	0	0	1	0	3
01:30 PM	0	0	0	0	2	0	0	0	0	0	0	0	2
Total	0	0	0	0	2	0	0	0	0	0	0	0	2
03:15 PM	0	0	0	0	1	0	0	0	0	0	0	0	1
03:30 PM	0	0	0	0	1	0	0	0	0	0	0	0	1
Total	0	0	0	0	2	0	0	0	0	0	0	0	2
04:15 PM	0	0	0	0	2	0	0	0	0	0	1	0	3
04:30 PM	0	0	0	0	0	0	0	0	0	0	1	0	1
04:45 PM	0	0	0	0	2	0	0	0	0	0	0	0	2
Total	0	0	0	0	4	0	0	0	0	0	2	0	6
05:00 PM	0	0	0	0	0	0	0	0	0	0	1	0	1
05:15 PM	0	0	0	0	3	0	0	0	0	0	1	0	4
05:45 PM	0	0	0	0	2	0	0	0	0	0	1	0	3
Total	0	0	0	0	5	0	0	0	0	0	3	0	8
Grand Total	0	0	0	0	19	0	0	0	0	0	10	0	29
Apprch %	0	0	0	0	100	0	0	0	0	0	100	0	
Total %	0	0	0	0	65.5	0	0	0	0	0	34.5	0	

CITY TRAFFIC COUNTERS

626.991.7522

www.ctcounters.com

File Name : TelfairSheldon_MC
Site Code : 00000000
Start Date : 1/15/2014
Page No : 2

	Telfair Ave Southbound				Sheldon St Westbound				Telfair Ave Northbound				Sheldon St Eastbound				
Start Time	Left	Thru	Right	App. Total	Left	Thru	Right	App. Total	Left	Thru	Right	App. Total	Left	Thru	Right	App. Total	Int. Total
Peak Hour Analysis From 07:00 AM to 09:45 AM - Peak 1 of 1																	
Peak Hour for Entire Intersection Begins at 07:30 AM																	
07:30 AM	0	0	0	0	0	0	0	0	0	0	0	0	0	**1**	0	**1**	1
07:45 AM	0	0	0	0	0	0	0	0	0	0	0	0	0	1	0	1	1
08:00 AM	0	0	0	0	0	0	0	0	0	0	0	0	0	1	0	1	1
08:15 AM	0	0	0	0	0	**2**	0	**2**	0	0	0	0	0	1	0	1	**3**
Total Volume	0	0	0	0	0	2	0	2	0	0	0	0	0	4	0	4	6
% App. Total	0	0	0		0	100	0		0	0	0		0	100	0		
PHF	.000	.000	.000	.000	.000	.250	.000	.250	.000	.000	.000	.000	.000	1.00	.000	1.00	.500

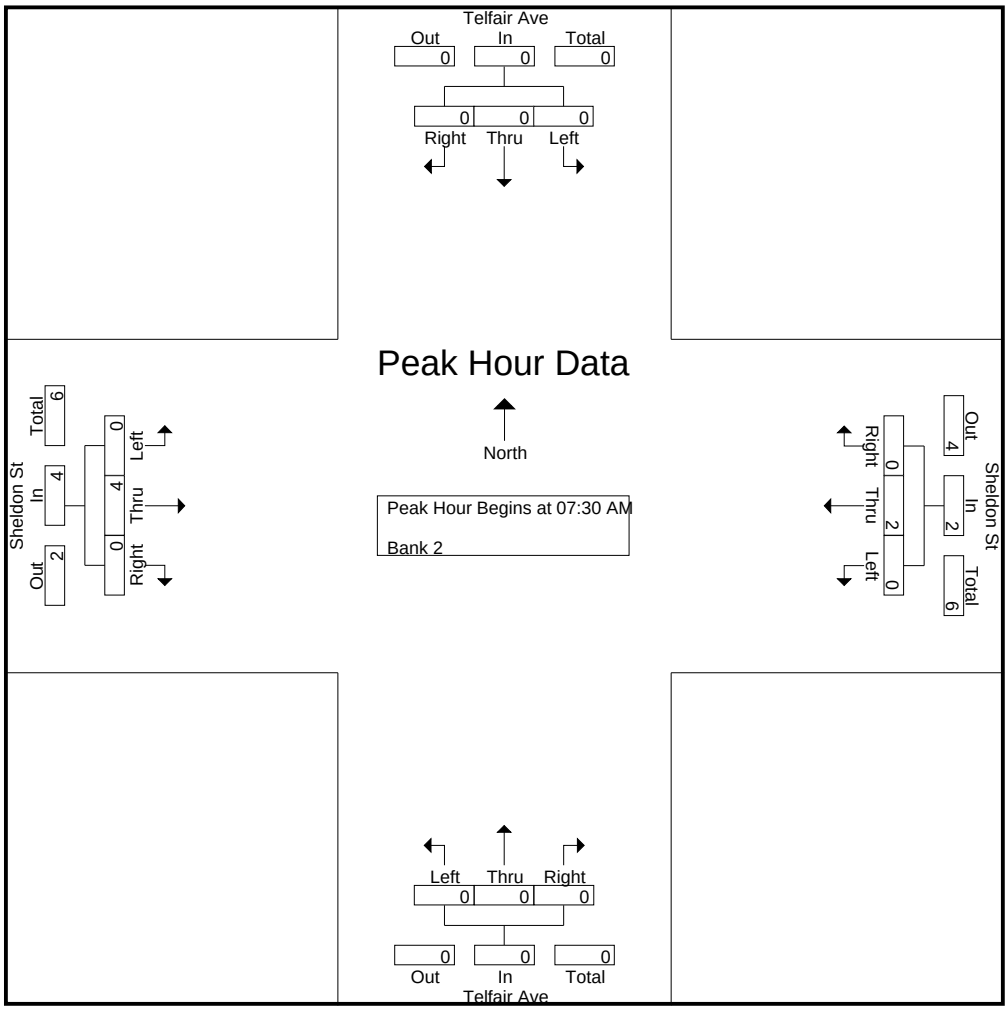

CITY TRAFFIC COUNTERS

626.991.7522

www.ctcounters.com

File Name : TelfairSheldon_MC
Site Code : 00000000
Start Date : 1/15/2014
Page No : 3

	Telfair Ave Southbound				Sheldon St Westbound				Telfair Ave Northbound				Sheldon St Eastbound				
Start Time	Left	Thru	Right	App. Total	Left	Thru	Right	App. Total	Left	Thru	Right	App. Total	Left	Thru	Right	App. Total	Int. Total
Peak Hour Analysis From 10:00 AM to 01:45 PM - Peak 1 of 1																	
Peak Hour for Entire Intersection Begins at 12:45 PM																	
12:45 PM	0	0	0	0	0	0	0	0	0	0	0	0	0	0	0	0	0
01:00 PM	0	0	0	0	0	0	0	0	0	0	0	0	0	0	0	0	0
01:15 PM	0	0	0	0	0	0	0	0	0	0	0	0	0	0	0	0	0
01:30 PM	0	0	0	0	0	**2**	0	**2**	0	0	0	0	0	0	0	0	**2**
Total Volume	0	0	0	0	0	2	0	2	0	0	0	0	0	0	0	0	2
% App. Total	0	0	0		0	100	0		0	0	0		0	0	0		
PHF	.000	.000	.000	.000	.000	.250	.000	.250	.000	.000	.000	.000	.000	.000	.000	.000	.250

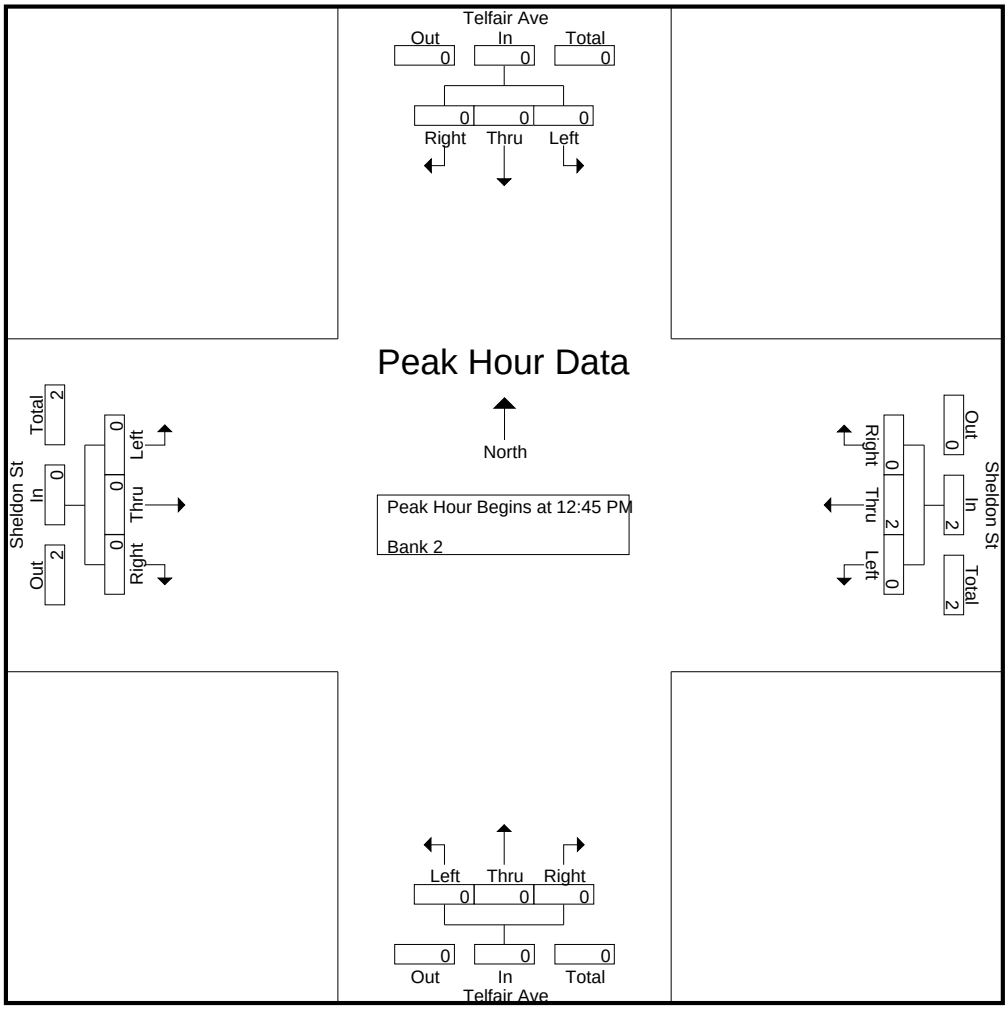

CITY TRAFFIC COUNTERS

626.991.7522

www.ctcounters.com

File Name : TelfairSheldon_MC
Site Code : 00000000
Start Date : 1/15/2014
Page No : 4

	Telfair Ave Southbound				Sheldon St Westbound				Telfair Ave Northbound				Sheldon St Eastbound				
Start Time	Left	Thru	Right	App. Total	Left	Thru	Right	App. Total	Left	Thru	Right	App. Total	Left	Thru	Right	App. Total	Int. Total
Peak Hour Analysis From 02:00 PM to 05:45 PM - Peak 1 of 1																	
Peak Hour for Entire Intersection Begins at 04:30 PM																	
04:30 PM	0	0	0	0	0	0	0	0	0	0	0	0	0	**1**	0	**1**	1
04:45 PM	0	0	0	0	0	2	0	2	0	0	0	0	0	0	0	0	2
05:00 PM	0	0	0	0	0	0	0	0	0	0	0	0	0	1	0	1	1
05:15 PM	0	0	0	0	0	**3**	0	**3**	0	0	0	0	0	1	0	1	**4**
Total Volume	0	0	0	0	0	5	0	5	0	0	0	0	0	3	0	3	8
% App. Total	0	0	0		0	100	0		0	0	0		0	100	0		
PHF	.000	.000	.000	.000	.000	.417	.000	.417	.000	.000	.000	.000	.000	.750	.000	.750	.500

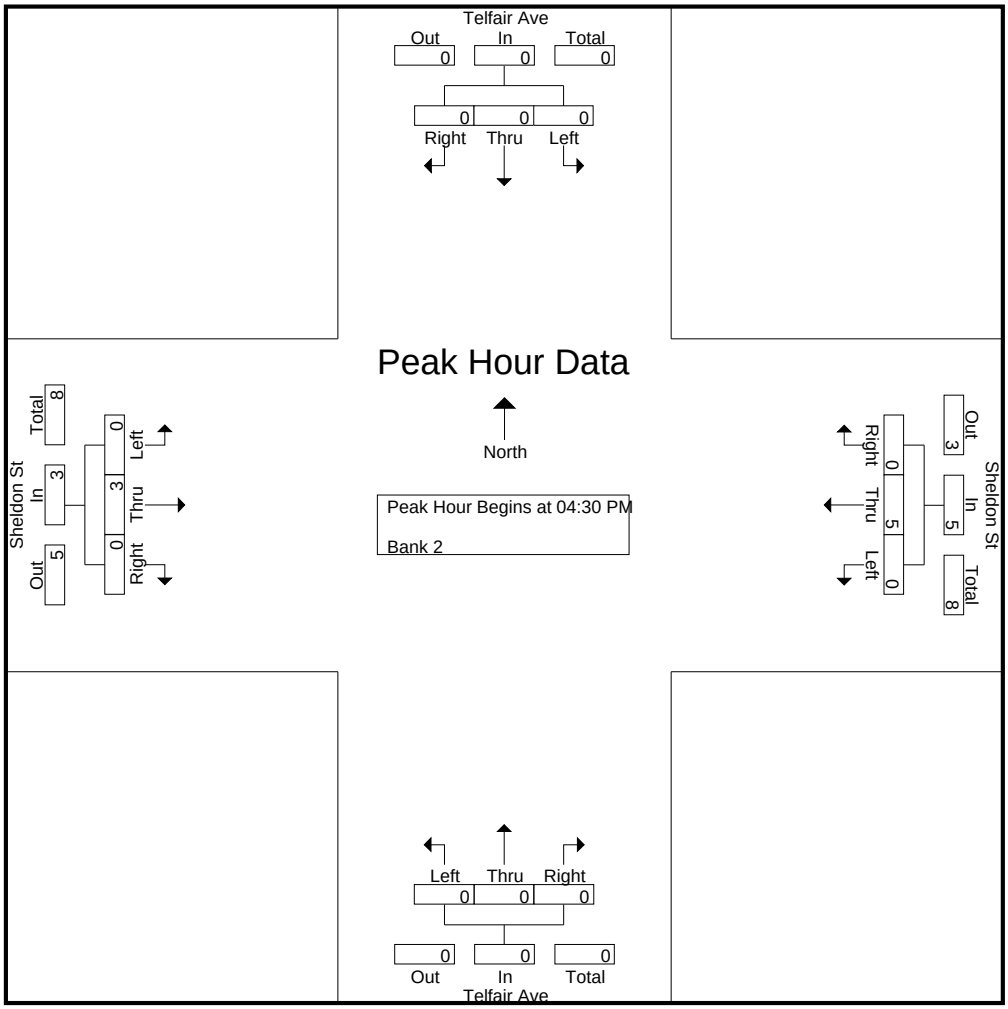

CITY TRAFFIC COUNTERS

626.991.7522

www.ctcounters.com

File Name : TelfairSheldon_Bus
Site Code : 00000000
Start Date : 1/15/2014
Page No : 1

Groups Printed- Bank 1

	Telfair Ave Southbound			Sheldon St Westbound			Telfair Ave Northbound			Sheldon St Eastbound			
Start Time	Left	Thru	Right	Left	Thru	Right	Left	Thru	Right	Left	Thru	Right	Int. Total
07:00 AM	0	0	0	1	2	0	1	0	0	0	2	1	7
07:15 AM	0	0	0	0	0	0	0	0	0	0	2	1	3
07:30 AM	0	0	0	0	1	0	0	0	1	0	1	0	3
07:45 AM	0	0	0	1	1	0	0	0	0	0	1	0	3
Total	0	0	0	2	4	0	1	0	1	0	6	2	16
08:15 AM	0	0	0	0	0	0	0	0	0	0	1	0	1
08:30 AM	0	0	0	0	1	0	0	0	0	0	4	0	5
08:45 AM	0	0	0	0	1	0	0	0	0	0	2	0	3
Total	0	0	0	0	2	0	0	0	0	0	7	0	9
09:00 AM	0	0	0	0	1	0	0	0	0	0	2	0	3
09:15 AM	0	0	0	0	0	0	0	0	0	0	1	0	1
09:30 AM	0	0	0	1	0	0	0	0	0	0	4	0	5
Total	0	0	0	1	1	0	0	0	0	0	7	0	9
12:00 PM	0	0	0	0	2	0	0	0	0	0	0	0	2
Total	0	0	0	0	2	0	0	0	0	0	0	0	2
01:00 PM	0	0	0	0	1	0	0	0	0	0	1	0	2
01:15 PM	0	0	0	1	1	0	0	0	0	0	6	0	8
01:30 PM	0	0	0	0	1	0	0	0	0	0	3	0	4
01:45 PM	0	0	0	0	0	0	0	0	0	0	3	0	3
Total	0	0	0	1	3	0	0	0	0	0	13	0	17
03:15 PM	0	0	0	1	0	0	0	0	1	0	1	0	3
03:30 PM	0	0	0	1	1	0	1	0	1	0	1	0	5
03:45 PM	0	0	0	0	2	0	0	0	0	0	0	1	3
Total	0	0	0	2	3	0	1	0	2	0	2	1	11
04:00 PM	0	0	0	0	1	0	0	0	0	0	4	1	6
04:15 PM	0	0	0	0	1	0	0	0	0	0	1	1	3
04:30 PM	0	0	0	0	0	0	0	1	0	0	1	0	2
04:45 PM	0	0	0	0	0	0	0	0	0	0	2	0	2
Total	0	0	0	0	2	0	0	1	0	0	8	2	13
05:00 PM	0	0	0	0	0	0	0	1	0	0	0	0	1
05:30 PM	0	0	0	0	0	0	0	0	0	0	1	0	1
05:45 PM	0	0	0	0	0	0	0	0	0	0	1	0	1
Total	0	0	0	0	0	0	0	1	0	0	2	0	3
Grand Total	0	0	0	6	17	0	2	2	3	0	45	5	80
Apprch %	0	0	0	26.1	73.9	0	28.6	28.6	42.9	0	90	10	
Total %	0	0	0	7.5	21.2	0	2.5	2.5	3.8	0	56.2	6.2	

CITY TRAFFIC COUNTERS

626.991.7522

www.ctcounters.com

File Name : TelfairSheldon_Bus
Site Code : 00000000
Start Date : 1/15/2014
Page No : 2

	Telfair Ave Southbound				Sheldon St Westbound				Telfair Ave Northbound				Sheldon St Eastbound				
Start Time	Left	Thru	Right	App. Total	Left	Thru	Right	App. Total	Left	Thru	Right	App. Total	Left	Thru	Right	App. Total	Int. Total
Peak Hour Analysis From 07:00 AM to 09:45 AM - Peak 1 of 1																	
Peak Hour for Entire Intersection Begins at 07:00 AM																	
07:00 AM	0	0	0	0	**1**	**2**	0	**3**	**1**	0	0	**1**	0	**2**	**1**	**3**	**7**
07:15 AM	0	0	0	0	0	0	0	0	0	0	0	0	0	2	1	3	3
07:30 AM	0	0	0	0	0	1	0	1	0	0	**1**	1	0	1	0	1	3
07:45 AM	0	0	0	0	1	1	0	2	0	0	0	0	0	1	0	1	3
Total Volume	0	0	0	0	2	4	0	6	1	0	1	2	0	6	2	8	16
% App. Total	0	0	0		33.3	66.7	0		50	0	50		0	75	25		
PHF	.000	.000	.000	.000	.500	.500	.000	.500	.250	.000	.250	.500	.000	.750	.500	.667	.571

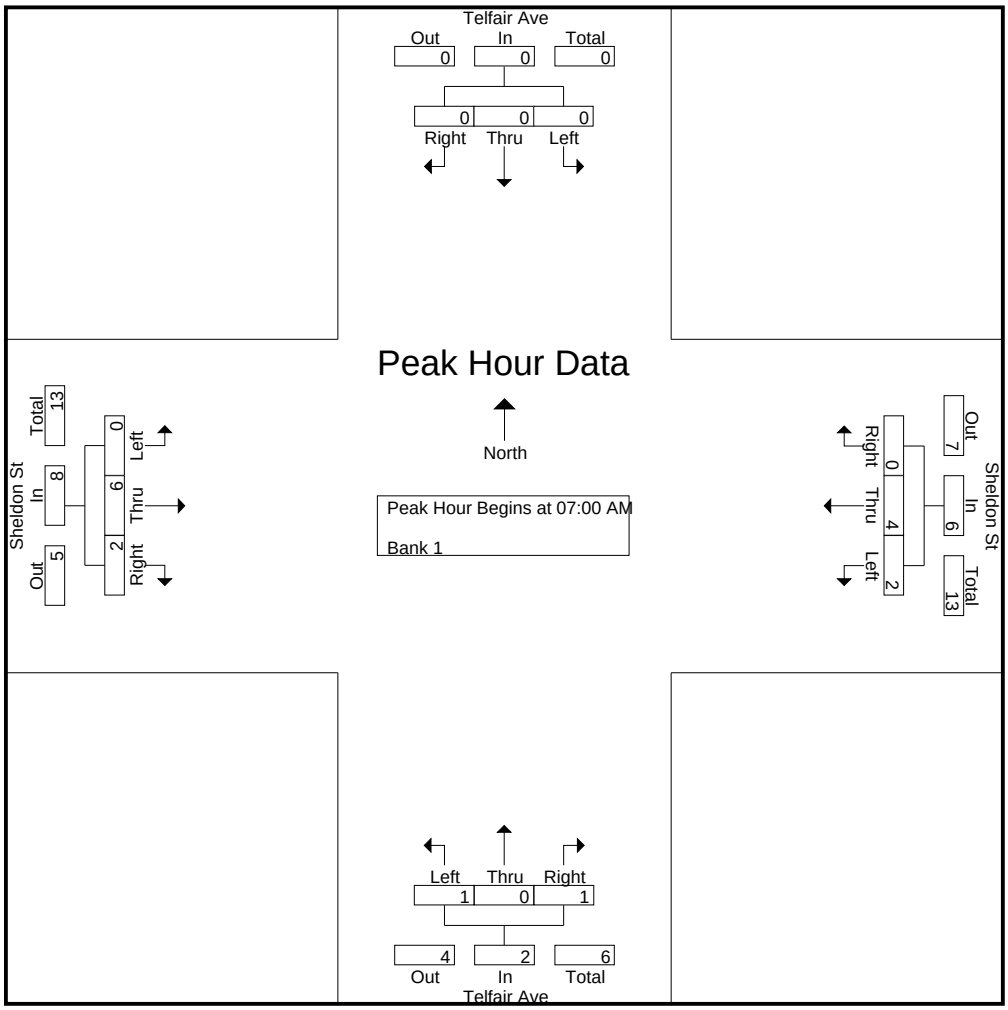

CITY TRAFFIC COUNTERS

626.991.7522

www.ctcounters.com

File Name : TelfairSheldon_Bus
Site Code : 00000000
Start Date : 1/15/2014
Page No : 3

	Telfair Ave Southbound				Sheldon St Westbound				Telfair Ave Northbound				Sheldon St Eastbound				
Start Time	Left	Thru	Right	App. Total	Left	Thru	Right	App. Total	Left	Thru	Right	App. Total	Left	Thru	Right	App. Total	Int. Total
Peak Hour Analysis From 10:00 AM to 01:45 PM - Peak 1 of 1																	
Peak Hour for Entire Intersection Begins at 01:00 PM																	
01:00 PM	0	0	0	0	0	**1**	0	1	0	0	0	0	0	1	0	1	2
01:15 PM	0	0	0	0	**1**	1	0	**2**	0	0	0	0	0	**6**	0	**6**	**8**
01:30 PM	0	0	0	0	0	1	0	1	0	0	0	0	0	3	0	3	4
01:45 PM	0	0	0	0	0	0	0	0	0	0	0	0	0	3	0	3	3
Total Volume	0	0	0	0	1	3	0	4	0	0	0	0	0	13	0	13	17
% App. Total	0	0	0		25	75	0		0	0	0		0	100	0		
PHF	.000	.000	.000	.000	.250	.750	.000	.500	.000	.000	.000	.000	.000	.542	.000	.542	.531

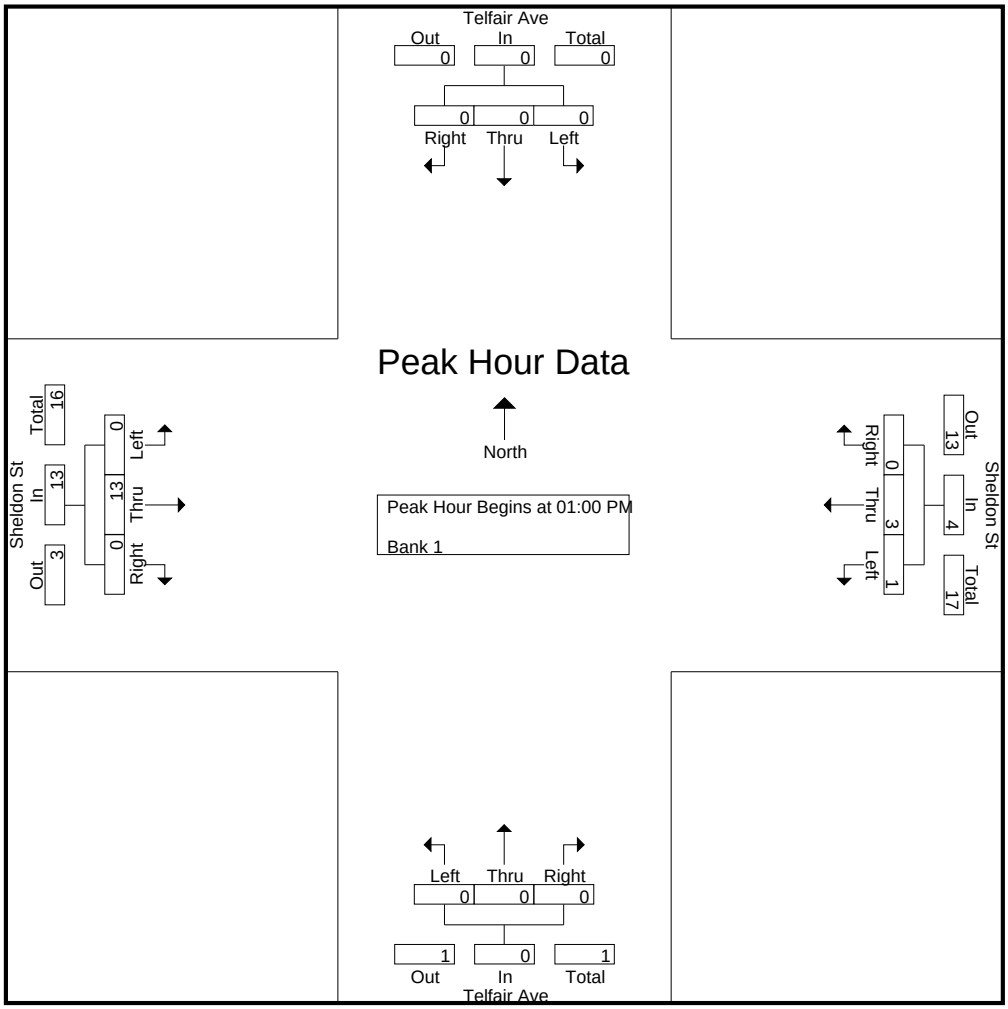

CITY TRAFFIC COUNTERS

626.991.7522

www.ctcounters.com

File Name : TelfairSheldon_Bus
Site Code : 00000000
Start Date : 1/15/2014
Page No : 4

	Telfair Ave Southbound				Sheldon St Westbound				Telfair Ave Northbound				Sheldon St Eastbound				
Start Time	Left	Thru	Right	App. Total	Left	Thru	Right	App. Total	Left	Thru	Right	App. Total	Left	Thru	Right	App. Total	Int. Total
Peak Hour Analysis From 02:00 PM to 05:45 PM - Peak 1 of 1																	
Peak Hour for Entire Intersection Begins at 03:15 PM																	
03:15 PM	0	0	0	0	**1**	0	0	1	0	0	**1**	1	0	1	0	1	3
03:30 PM	0	0	0	0	1	1	0	**2**	**1**	0	1	**2**	0	1	0	1	5
03:45 PM	0	0	0	0	0	**2**	0	2	0	0	0	0	0	0	**1**	1	3
04:00 PM	0	0	0	0	0	1	0	1	0	0	0	0	0	**4**	1	**5**	**6**
Total Volume	0	0	0	0	2	4	0	6	1	0	2	3	0	6	2	8	17
% App. Total	0	0	0		33.3	66.7	0		33.3	0	66.7		0	75	25		
PHF	.000	.000	.000	.000	.500	.500	.000	.750	.250	.000	.500	.375	.000	.375	.500	.400	.708

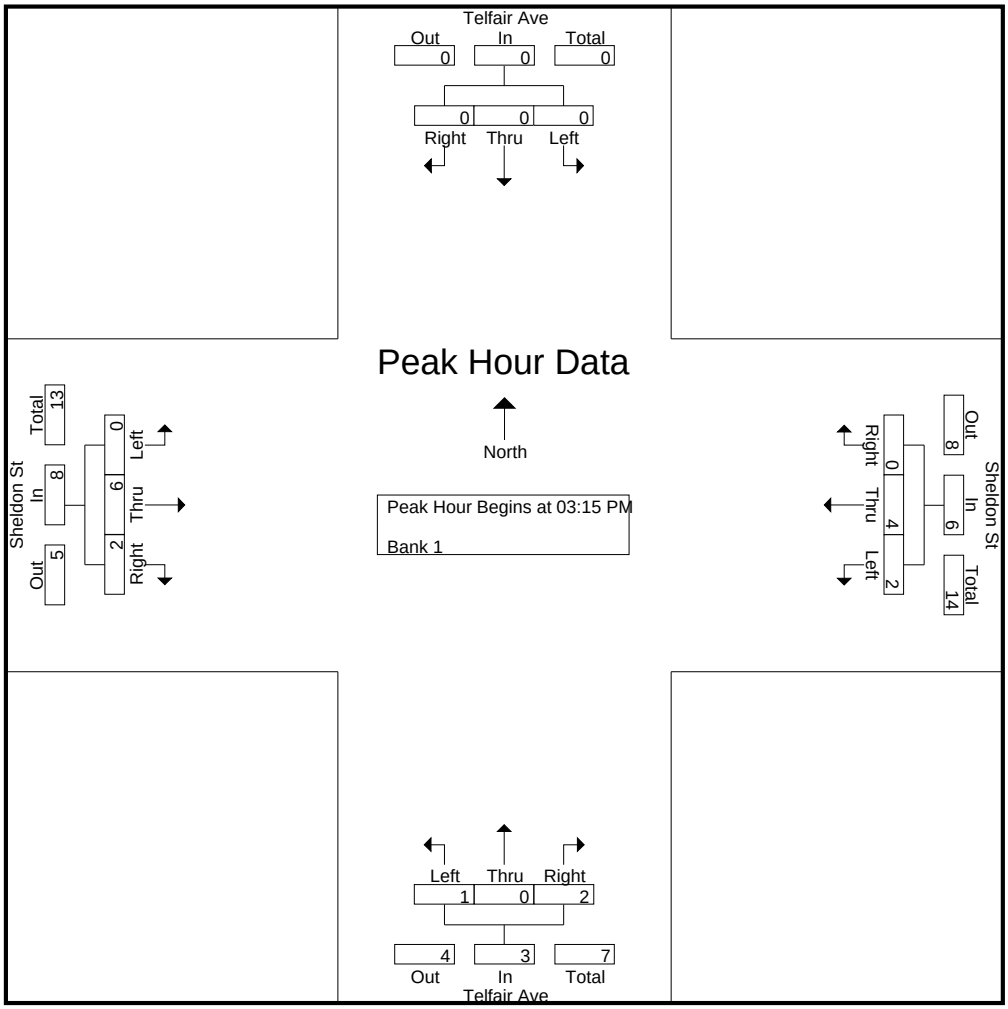

CITY TRAFFIC COUNTERS

626.991.7522

www.ctcounters.com

File Name : TelfairSheldon_2Axle
Site Code : 00000000
Start Date : 1/15/2014
Page No : 1

Groups Printed- Unshifted

	Telfair Ave Southbound			Sheldon St Westbound			Telfair Ave Northbound			Sheldon St Eastbound			
Start Time	Left	Thru	Right	Left	Thru	Right	Left	Thru	Right	Left	Thru	Right	Int. Total
07:00 AM	0	0	0	1	4	0	1	0	0	0	6	0	12
07:15 AM	0	0	0	0	4	0	2	0	0	0	5	0	11
07:30 AM	0	0	0	0	3	0	0	0	0	0	6	0	9
07:45 AM	0	0	0	0	7	0	2	0	0	0	5	0	14
Total	0	0	0	1	18	0	5	0	0	0	22	0	46
08:00 AM	0	0	0	0	4	0	0	0	0	0	4	2	10
08:15 AM	0	0	0	0	10	1	1	0	1	1	6	1	21
08:30 AM	0	0	0	0	6	0	1	0	0	0	6	0	13
08:45 AM	0	1	0	1	9	1	2	2	0	0	7	0	23
Total	0	1	0	1	29	2	4	2	1	1	23	3	67
09:00 AM	0	0	0	0	12	0	0	0	0	0	7	0	19
09:15 AM	0	0	0	0	10	0	0	0	0	0	12	0	22
09:30 AM	0	0	0	1	8	0	1	0	1	0	8	1	20
09:45 AM	0	0	0	0	3	0	0	0	0	0	6	0	9
Total	0	0	0	1	33	0	1	0	1	0	33	1	70
12:00 PM	0	0	0	0	5	0	0	0	0	0	4	0	9
12:15 PM	0	0	0	1	4	0	1	0	0	0	4	0	10
12:30 PM	0	0	0	1	4	1	1	0	0	2	2	0	11
12:45 PM	0	0	0	0	4	1	1	2	0	0	4	2	14
Total	0	0	0	2	17	2	3	2	0	2	14	2	44
01:00 PM	0	0	0	1	4	0	0	0	0	0	5	0	10
01:15 PM	0	0	1	0	5	0	1	0	1	0	3	1	12
01:30 PM	0	0	0	2	9	0	0	0	0	0	4	0	15
01:45 PM	0	0	0	0	10	1	0	0	0	0	11	0	22
Total	0	0	1	3	28	1	1	0	1	0	23	1	59
03:00 PM	0	0	0	0	8	1	0	1	0	0	8	0	18
03:15 PM	0	0	0	0	8	0	0	0	0	0	10	1	19
03:30 PM	0	0	0	0	11	0	0	0	0	0	11	0	22
03:45 PM	0	0	0	0	4	0	0	0	0	0	11	0	15
Total	0	0	0	0	31	1	0	1	0	0	40	1	74
04:00 PM	0	0	0	0	4	0	0	0	0	0	6	1	11
04:15 PM	0	0	0	0	4	0	0	0	0	0	3	1	8
04:30 PM	0	0	0	0	4	0	0	0	0	0	4	0	8
04:45 PM	0	0	0	0	1	0	1	0	0	0	6	0	8
Total	0	0	0	0	13	0	1	0	0	0	19	2	35
05:00 PM	0	0	0	0	2	0	1	0	0	0	7	0	10
05:15 PM	0	0	0	0	3	0	0	0	0	0	7	0	10
05:30 PM	0	0	0	0	1	0	0	0	0	0	7	0	8
05:45 PM	0	0	0	0	2	0	0	0	0	1	5	0	8
Total	0	0	0	0	8	0	1	0	0	1	26	0	36
Grand Total	0	1	1	8	177	6	16	5	3	4	200	10	431
Apprch %	0	50	50	4.2	92.7	3.1	66.7	20.8	12.5	1.9	93.5	4.7	
Total %	0	0.2	0.2	1.9	41.1	1.4	3.7	1.2	0.7	0.9	46.4	2.3	

CITY TRAFFIC COUNTERS

626.991.7522

www.ctcounters.com

File Name : TelfairSheldon_2Axle
Site Code : 00000000
Start Date : 1/15/2014
Page No : 2

	Telfair Ave Southbound				Sheldon St Westbound				Telfair Ave Northbound				Sheldon St Eastbound				
Start Time	Left	Thru	Right	App. Total	Left	Thru	Right	App. Total	Left	Thru	Right	App. Total	Left	Thru	Right	App. Total	Int. Total
Peak Hour Analysis From 07:00 AM to 09:45 AM - Peak 1 of 1																	
Peak Hour for Entire Intersection Begins at 08:45 AM																	
08:45 AM	0	**1**	0	**1**	**1**	9	**1**	11	**2**	**2**	0	**4**	0	7	0	7	**23**
09:00 AM	0	0	0	0	0	**12**	0	**12**	0	0	0	0	0	7	0	7	19
09:15 AM	0	0	0	0	0	10	0	10	0	0	0	0	0	**12**	0	**12**	22
09:30 AM	0	0	0	0	1	8	0	9	1	0	**1**	2	0	8	**1**	9	20
Total Volume	0	1	0	1	2	39	1	42	3	2	1	6	0	34	1	35	84
% App. Total	0	100	0		4.8	92.9	2.4		50	33.3	16.7		0	97.1	2.9		
PHF	.000	.250	.000	.250	.500	.813	.250	.875	.375	.250	.250	.375	.000	.708	.250	.729	.913

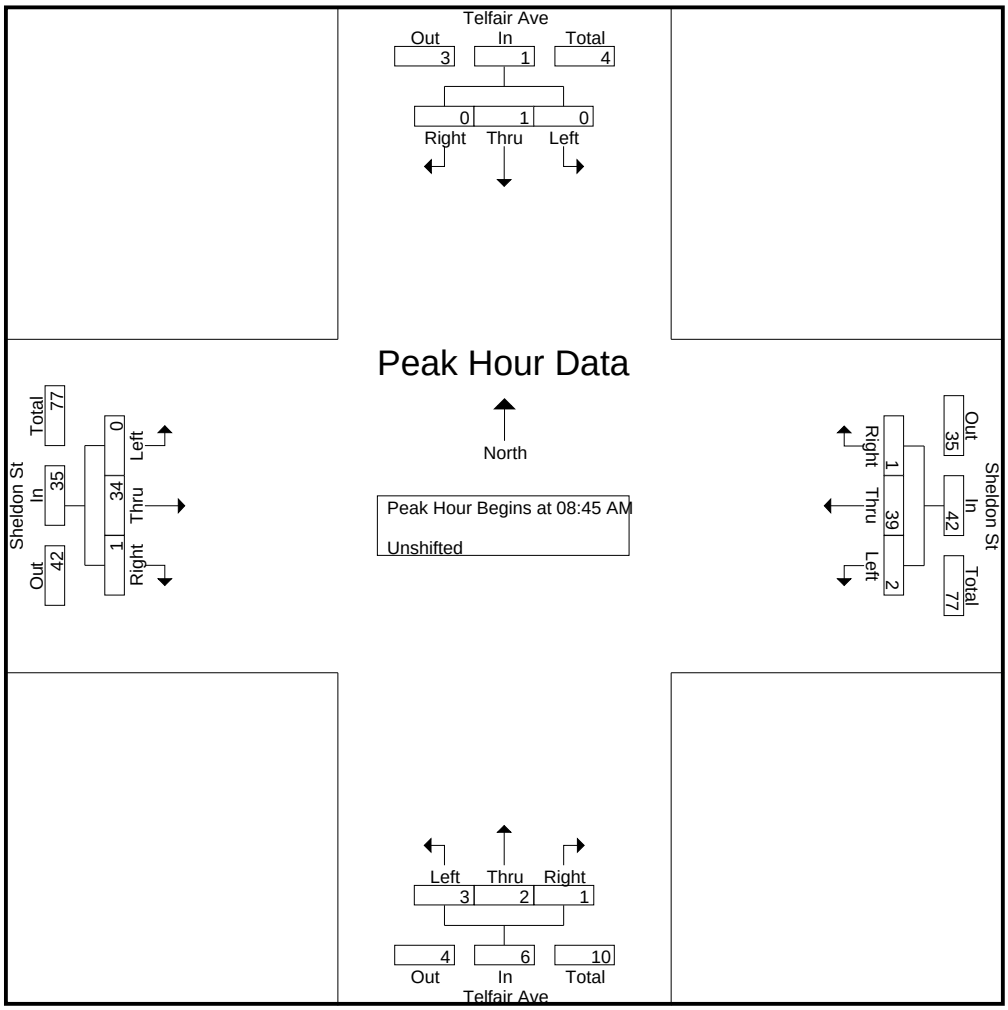

CITY TRAFFIC COUNTERS

626.991.7522

www.ctcounters.com

File Name : TelfairSheldon_2Axle
Site Code : 00000000
Start Date : 1/15/2014
Page No : 3

	Telfair Ave Southbound				Sheldon St Westbound				Telfair Ave Northbound				Sheldon St Eastbound				
Start Time	Left	Thru	Right	App. Total	Left	Thru	Right	App. Total	Left	Thru	Right	App. Total	Left	Thru	Right	App. Total	Int. Total
Peak Hour Analysis From 10:00 AM to 01:45 PM - Peak 1 of 1																	
Peak Hour for Entire Intersection Begins at 01:00 PM																	
01:00 PM	0	0	0	0	1	4	0	5	0	0	0	0	0	5	0	5	10
01:15 PM	0	0	**1**	**1**	0	5	0	5	**1**	0	**1**	**2**	0	3	**1**	4	12
01:30 PM	0	0	0	0	**2**	9	0	**11**	0	0	0	0	0	4	0	4	15
01:45 PM	0	0	0	0	0	**10**	**1**	11	0	0	0	0	0	**11**	0	**11**	**22**
Total Volume	0	0	1	1	3	28	1	32	1	0	1	2	0	23	1	24	59
% App. Total	0	0	100		9.4	87.5	3.1		50	0	50		0	95.8	4.2		
PHF	.000	.000	.250	.250	.375	.700	.250	.727	.250	.000	.250	.250	.000	.523	.250	.545	.670

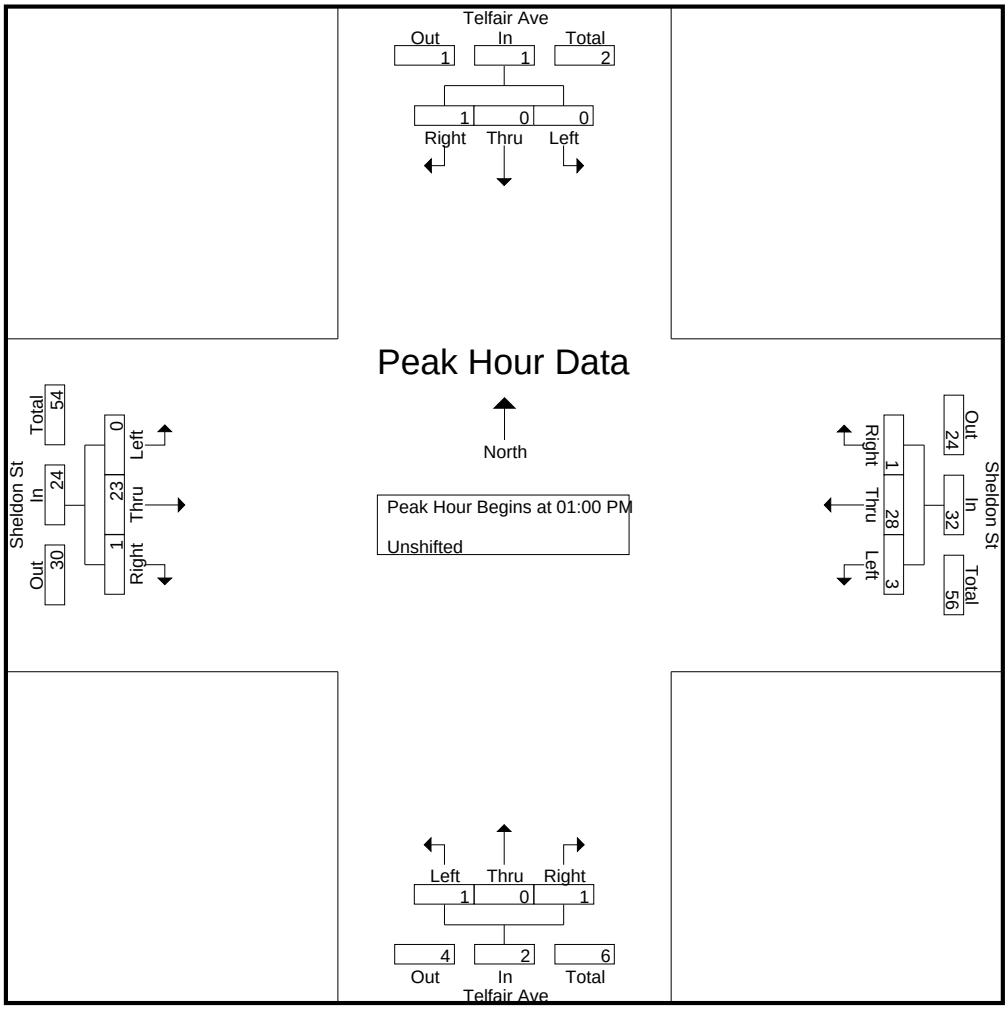

CITY TRAFFIC COUNTERS

626.991.7522

www.ctcounters.com

File Name : TelfairSheldon_2Axle
Site Code : 00000000
Start Date : 1/15/2014
Page No : 4

	Telfair Ave Southbound				Sheldon St Westbound				Telfair Ave Northbound				Sheldon St Eastbound				
Start Time	Left	Thru	Right	App. Total	Left	Thru	Right	App. Total	Left	Thru	Right	App. Total	Left	Thru	Right	App. Total	Int. Total
Peak Hour Analysis From 02:00 PM to 05:45 PM - Peak 1 of 1																	
Peak Hour for Entire Intersection Begins at 03:00 PM																	
03:00 PM	0	0	0	0	0	8	**1**	9	0	**1**	0	**1**	0	8	0	8	18
03:15 PM	0	0	0	0	0	8	0	8	0	0	0	0	0	10	**1**	**11**	19
03:30 PM	0	0	0	0	0	**11**	0	**11**	0	0	0	0	0	**11**	0	11	**22**
03:45 PM	0	0	0	0	0	4	0	4	0	0	0	0	0	11	0	11	15
Total Volume	0	0	0	0	0	31	1	32	0	1	0	1	0	40	1	41	74
% App. Total	0	0	0		0	96.9	3.1		0	100	0		0	97.6	2.4		
PHF	.000	.000	.000	.000	.000	.705	.250	.727	.000	.250	.000	.250	.000	.909	.250	.932	.841

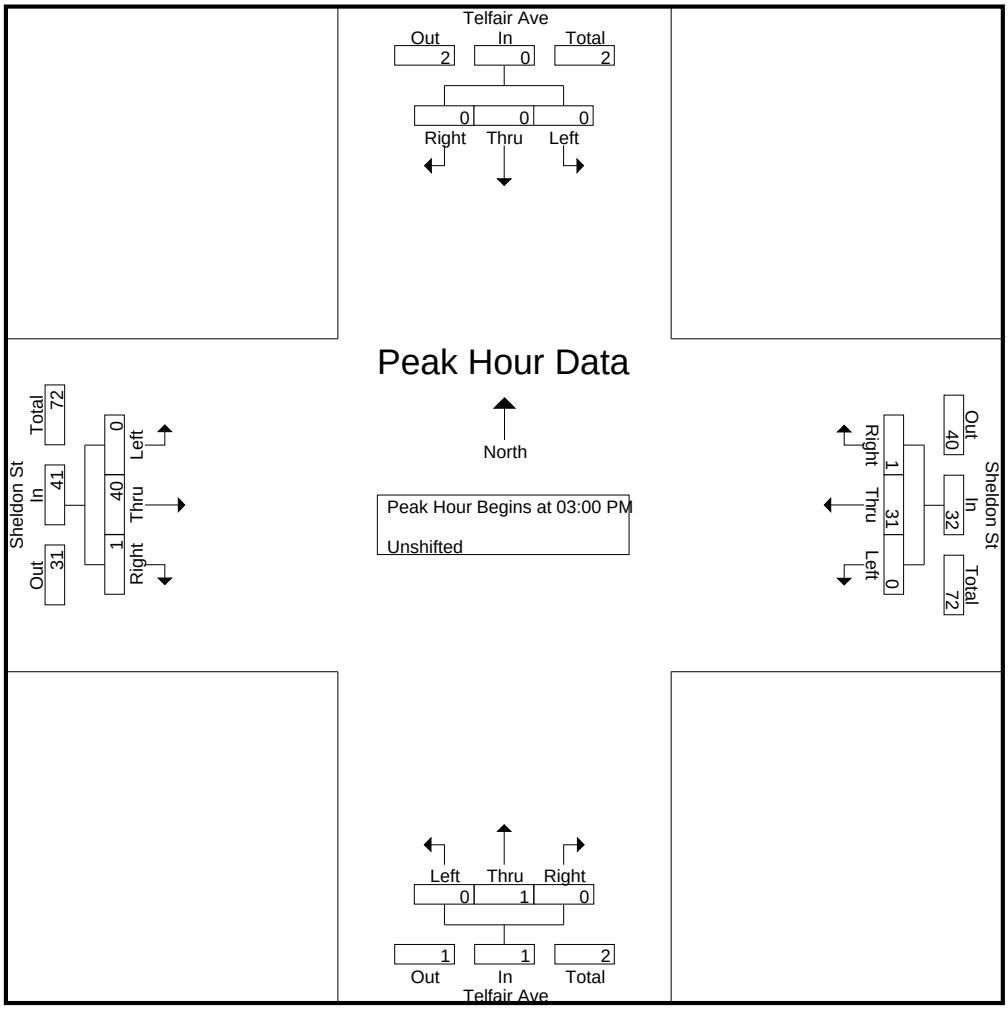

CITY TRAFFIC COUNTERS

626.991.7522

www.ctcounters.com

File Name : TelfairSheldon_3Axle
Site Code : 00000000
Start Date : 1/15/2014
Page No : 1

Groups Printed- Bank 1

	Telfair Ave Southbound			Sheldon St Westbound			Telfair Ave Northbound			Sheldon St Eastbound			
Start Time	Left	Thru	Right	Left	Thru	Right	Left	Thru	Right	Left	Thru	Right	Int. Total
07:00 AM	0	0	0	0	4	0	0	0	0	0	2	0	6
07:15 AM	0	0	0	0	3	0	0	0	0	0	1	0	4
07:30 AM	0	0	0	0	0	0	0	0	0	0	2	0	2
07:45 AM	0	0	0	0	2	0	0	0	0	0	1	0	3
Total	0	0	0	0	9	0	0	0	0	0	6	0	15
08:00 AM	0	0	0	0	6	0	0	0	1	0	4	0	11
08:15 AM	0	0	0	1	2	0	0	0	0	1	3	0	7
08:30 AM	0	0	1	0	2	0	0	0	0	0	5	0	8
08:45 AM	0	0	0	0	4	0	0	0	0	0	2	0	6
Total	0	0	1	1	14	0	0	0	1	1	14	0	32
09:00 AM	0	0	0	0	7	0	0	0	0	0	4	1	12
09:15 AM	0	0	0	0	6	0	0	0	0	0	6	0	12
09:30 AM	0	0	0	0	8	0	0	0	0	0	2	0	10
09:45 AM	0	0	0	0	6	0	0	0	0	0	4	0	10
Total	0	0	0	0	27	0	0	0	0	0	16	1	44
12:00 PM	0	0	0	0	5	0	0	0	0	0	4	0	9
12:15 PM	0	0	0	0	4	0	0	0	0	0	3	0	7
12:30 PM	0	0	0	0	3	0	0	0	0	0	2	0	5
12:45 PM	0	0	0	0	3	0	0	0	0	0	3	0	6
Total	0	0	0	0	15	0	0	0	0	0	12	0	27
01:00 PM	0	0	0	0	5	0	0	0	0	0	3	0	8
01:15 PM	0	0	0	0	5	0	0	0	0	0	3	0	8
01:30 PM	0	0	0	0	3	0	0	0	0	0	4	0	7
01:45 PM	0	0	0	0	4	0	0	0	0	0	3	0	7
Total	0	0	0	0	17	0	0	0	0	0	13	0	30
03:00 PM	0	0	0	0	2	0	0	0	0	0	5	0	7
03:15 PM	0	0	0	0	2	0	0	0	0	0	4	0	6
03:30 PM	0	0	0	0	2	0	0	0	0	0	1	0	3
03:45 PM	0	0	0	0	1	0	0	0	0	0	3	0	4
Total	0	0	0	0	7	0	0	0	0	0	13	0	20
04:00 PM	0	0	0	0	0	0	0	0	0	0	4	0	4
04:15 PM	0	0	0	0	1	0	0	0	0	0	5	0	6
04:30 PM	0	0	0	0	1	0	0	1	0	0	2	0	4
04:45 PM	0	0	0	0	1	0	0	0	0	0	3	0	4
Total	0	0	0	0	3	0	0	1	0	0	14	0	18
05:00 PM	0	0	0	0	0	0	0	0	0	0	6	0	6
05:15 PM	0	0	0	0	0	0	0	0	0	0	3	0	3
05:30 PM	0	0	0	0	0	0	0	0	0	0	2	0	2
05:45 PM	0	0	0	0	0	0	0	0	0	0	1	0	1
Total	0	0	0	0	0	0	0	0	0	0	12	0	12
Grand Total	0	0	1	1	92	0	0	1	1	1	100	1	198
Apprch %	0	0	100	1.1	98.9	0	0	50	50	1	98	1	
Total %	0	0	0.5	0.5	46.5	0	0	0.5	0.5	0.5	50.5	0.5	

CITY TRAFFIC COUNTERS

626.991.7522

www.ctcounters.com

File Name : TelfairSheldon_3Axle
Site Code : 00000000
Start Date : 1/15/2014
Page No : 2

	Telfair Ave Southbound				Sheldon St Westbound				Telfair Ave Northbound				Sheldon St Eastbound				
Start Time	Left	Thru	Right	App. Total	Left	Thru	Right	App. Total	Left	Thru	Right	App. Total	Left	Thru	Right	App. Total	Int. Total
Peak Hour Analysis From 07:00 AM to 09:45 AM - Peak 1 of 1																	
Peak Hour for Entire Intersection Begins at 09:00 AM																	
09:00 AM	0	0	0	0	0	7	0	7	0	0	0	0	0	4	**1**	5	**12**
09:15 AM	0	0	0	0	0	6	0	6	0	0	0	0	0	**6**	0	**6**	12
09:30 AM	0	0	0	0	0	**8**	0	**8**	0	0	0	0	0	2	0	2	10
09:45 AM	0	0	0	0	0	6	0	6	0	0	0	0	0	4	0	4	10
Total Volume	0	0	0	0	0	27	0	27	0	0	0	0	0	16	1	17	44
% App. Total	0	0	0		0	100	0		0	0	0		0	94.1	5.9		
PHF	.000	.000	.000	.000	.000	.844	.000	.844	.000	.000	.000	.000	.000	.667	.250	.708	.917

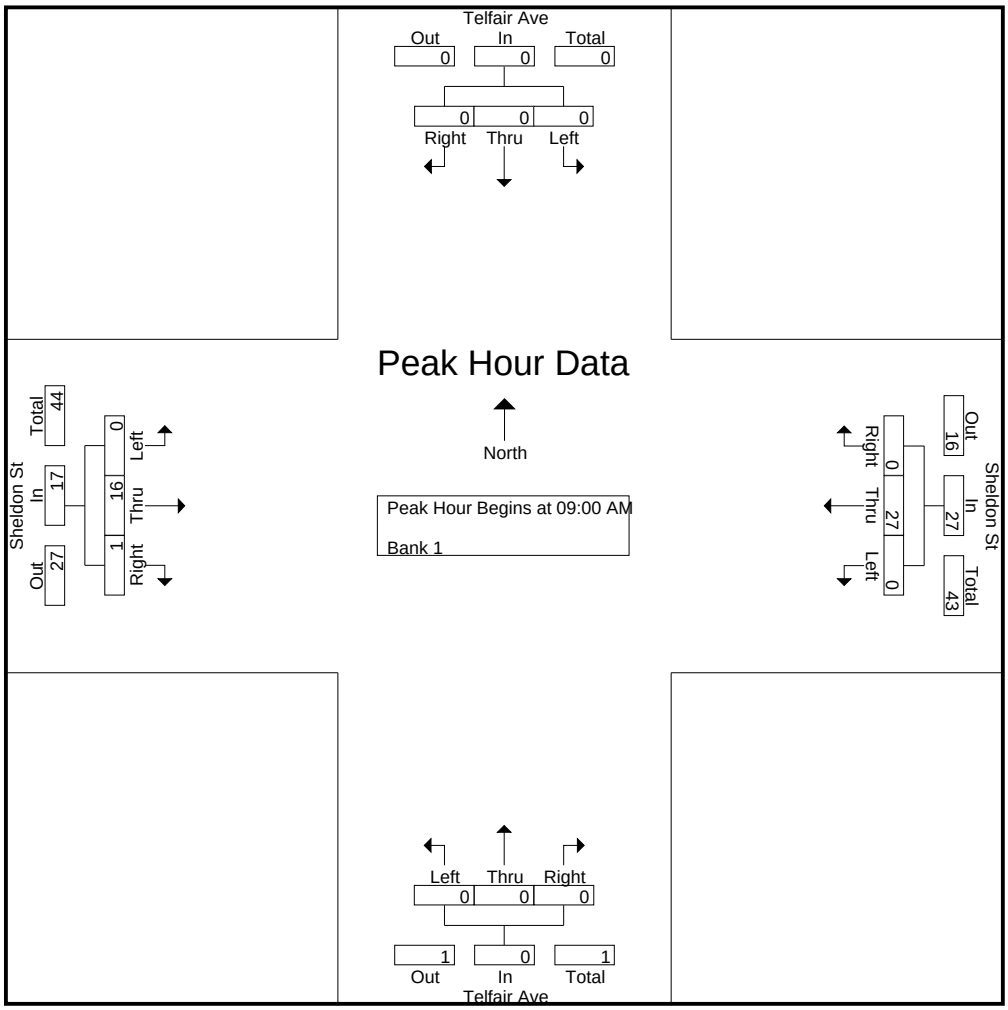

CITY TRAFFIC COUNTERS

626.991.7522

www.ctcounters.com

File Name : TelfairSheldon_3Axle
Site Code : 00000000
Start Date : 1/15/2014
Page No : 3

	Telfair Ave Southbound				Sheldon St Westbound				Telfair Ave Northbound				Sheldon St Eastbound				
Start Time	Left	Thru	Right	App. Total	Left	Thru	Right	App. Total	Left	Thru	Right	App. Total	Left	Thru	Right	App. Total	Int. Total
Peak Hour Analysis From 10:00 AM to 01:45 PM - Peak 1 of 1																	
Peak Hour for Entire Intersection Begins at 01:00 PM																	
01:00 PM	0	0	0	0	0	**5**	0	**5**	0	0	0	0	0	3	0	3	**8**
01:15 PM	0	0	0	0	0	5	0	5	0	0	0	0	0	3	0	3	8
01:30 PM	0	0	0	0	0	3	0	3	0	0	0	0	0	**4**	0	**4**	7
01:45 PM	0	0	0	0	0	4	0	4	0	0	0	0	0	3	0	3	7
Total Volume	0	0	0	0	0	17	0	17	0	0	0	0	0	13	0	13	30
% App. Total	0	0	0		0	100	0		0	0	0		0	100	0		
PHF	.000	.000	.000	.000	.000	.850	.000	.850	.000	.000	.000	.000	.000	.813	.000	.813	.938

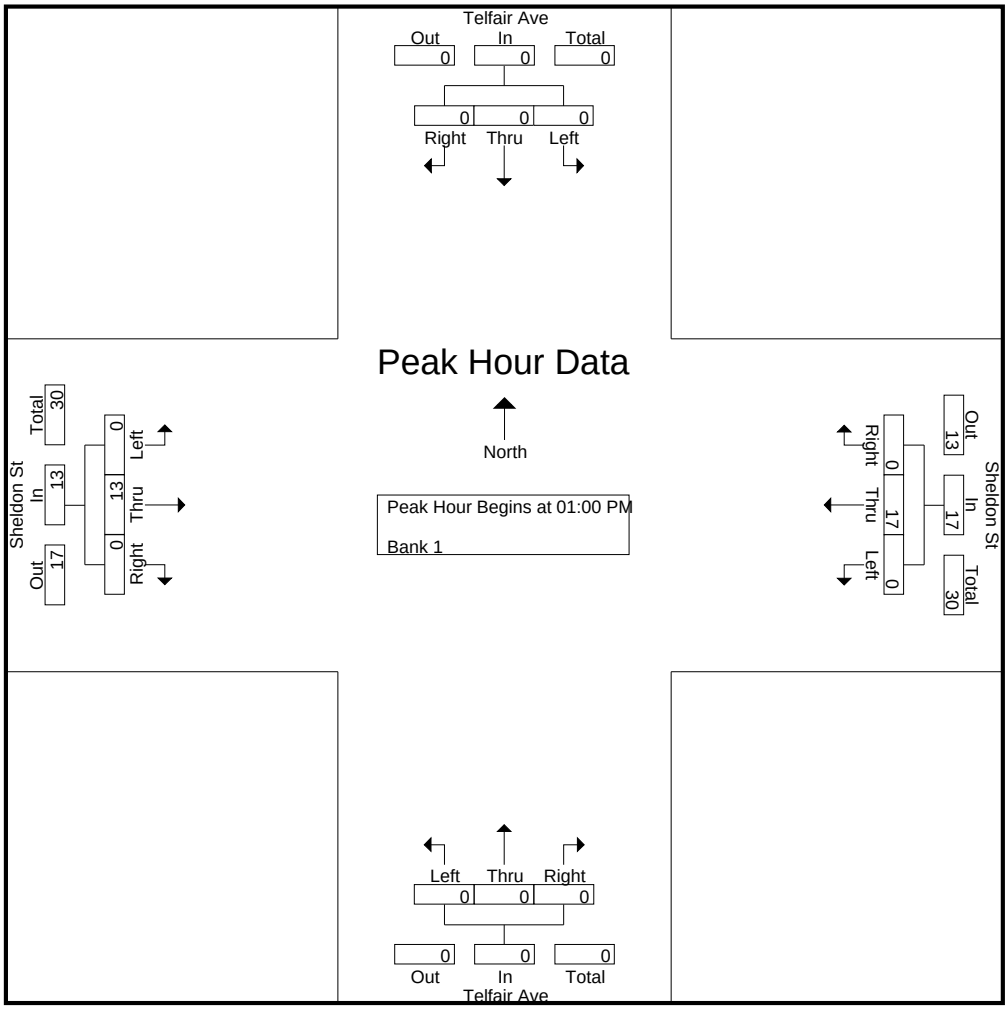

CITY TRAFFIC COUNTERS

626.991.7522

www.ctcounters.com

File Name : TelfairSheldon_3Axle
Site Code : 00000000
Start Date : 1/15/2014
Page No : 4

	Telfair Ave Southbound				Sheldon St Westbound				Telfair Ave Northbound				Sheldon St Eastbound				
Start Time	Left	Thru	Right	App. Total	Left	Thru	Right	App. Total	Left	Thru	Right	App. Total	Left	Thru	Right	App. Total	Int. Total
Peak Hour Analysis From 02:00 PM to 05:45 PM - Peak 1 of 1																	
Peak Hour for Entire Intersection Begins at 03:00 PM																	
03:00 PM	0	0	0	0	0	**2**	0	**2**	0	0	0	0	0	**5**	0	**5**	**7**
03:15 PM	0	0	0	0	0	2	0	2	0	0	0	0	0	4	0	4	6
03:30 PM	0	0	0	0	0	2	0	2	0	0	0	0	0	1	0	1	3
03:45 PM	0	0	0	0	0	1	0	1	0	0	0	0	0	3	0	3	4
Total Volume	0	0	0	0	0	7	0	7	0	0	0	0	0	13	0	13	20
% App. Total	0	0	0		0	100	0		0	0	0		0	100	0		
PHF	.000	.000	.000	.000	.000	.875	.000	.875	.000	.000	.000	.000	.000	.650	.000	.650	.714

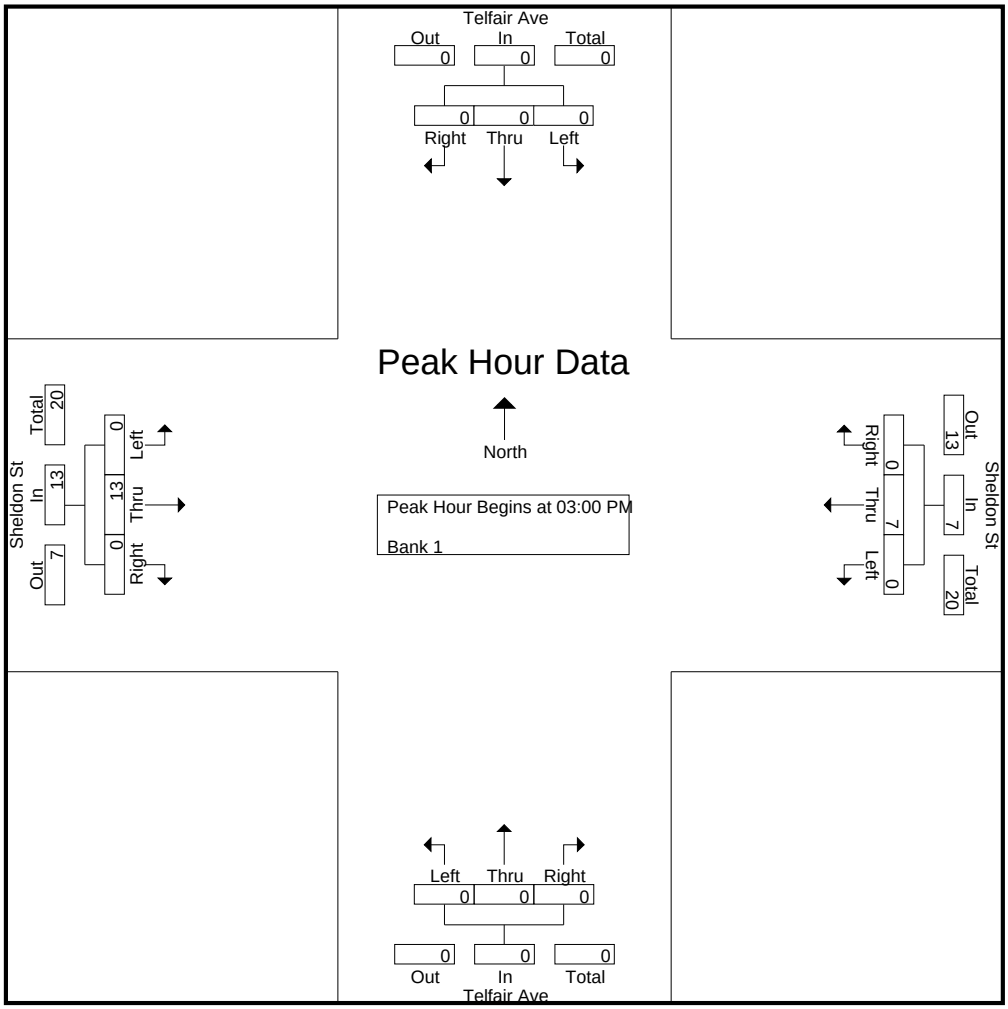

CITY TRAFFIC COUNTERS

626.991.7522

www.ctcounters.com

File Name : TelfairSheldon_4Axle
Site Code : 00000000
Start Date : 1/15/2014
Page No : 1

Groups Printed- Bank 2

	Telfair Ave Southbound			Sheldon St Westbound			Telfair Ave Northbound			Sheldon St Eastbound			
Start Time	Left	Thru	Right	Left	Thru	Right	Left	Thru	Right	Left	Thru	Right	Int. Total
07:00 AM	0	0	0	0	1	0	0	0	0	0	0	0	1
07:30 AM	0	0	0	0	1	0	0	0	0	0	0	0	1
Total	0	0	0	0	2	0	0	0	0	0	0	0	2
08:00 AM	0	0	0	0	0	0	0	0	0	0	2	0	2
08:45 AM	0	0	0	0	1	0	0	0	0	0	1	0	2
Total	0	0	0	0	1	0	0	0	0	0	3	0	4
09:00 AM	0	0	0	0	0	0	0	0	0	0	1	0	1
09:15 AM	0	0	0	0	1	0	0	0	0	0	0	0	1
09:30 AM	0	0	0	0	2	0	0	0	0	0	0	0	2
Total	0	0	0	0	3	0	0	0	0	0	1	0	4
12:15 PM	0	0	0	0	1	0	0	0	0	0	0	0	1
12:30 PM	0	0	0	0	1	0	0	0	0	0	1	0	2
12:45 PM	0	0	0	0	0	0	0	0	0	0	2	0	2
Total	0	0	0	0	2	0	0	0	0	0	3	0	5
01:30 PM	0	0	0	0	0	0	0	0	0	0	1	0	1
Total	0	0	0	0	0	0	0	0	0	0	1	0	1
03:00 PM	0	0	0	0	0	0	0	0	0	0	1	0	1
03:45 PM	0	0	0	0	0	0	0	0	0	0	1	0	1
Total	0	0	0	0	0	0	0	0	0	0	2	0	2
04:30 PM	0	0	0	0	0	0	0	0	0	0	1	0	1
Total	0	0	0	0	0	0	0	0	0	0	1	0	1
05:15 PM	0	0	0	0	0	0	0	0	0	0	1	0	1
05:45 PM	0	0	0	0	1	0	0	0	0	0	1	0	2
Total	0	0	0	0	1	0	0	0	0	0	2	0	3
Grand Total	0	0	0	0	9	0	0	0	0	0	13	0	22
Apprch %	0	0	0	0	100	0	0	0	0	0	100	0	
Total %	0	0	0	0	40.9	0	0	0	0	0	59.1	0	

CITY TRAFFIC COUNTERS

626.991.7522

www.ctcounters.com

File Name : TelfairSheldon_4Axle
Site Code : 00000000
Start Date : 1/15/2014
Page No : 2

	Telfair Ave Southbound				Sheldon St Westbound				Telfair Ave Northbound				Sheldon St Eastbound				
Start Time	Left	Thru	Right	App. Total	Left	Thru	Right	App. Total	Left	Thru	Right	App. Total	Left	Thru	Right	App. Total	Int. Total
Peak Hour Analysis From 07:00 AM to 09:45 AM - Peak 1 of 1																	
Peak Hour for Entire Intersection Begins at 08:45 AM																	
08:45 AM	0	0	0	0	0	1	0	1	0	0	0	0	0	**1**	0	**1**	**2**
09:00 AM	0	0	0	0	0	0	0	0	0	0	0	0	0	1	0	1	1
09:15 AM	0	0	0	0	0	1	0	1	0	0	0	0	0	0	0	0	1
09:30 AM	0	0	0	0	0	**2**	0	**2**	0	0	0	0	0	0	0	0	2
Total Volume	0	0	0	0	0	4	0	4	0	0	0	0	0	2	0	2	6
% App. Total	0	0	0		0	100	0		0	0	0		0	100	0		
PHF	.000	.000	.000	.000	.000	.500	.000	.500	.000	.000	.000	.000	.000	.500	.000	.500	.750

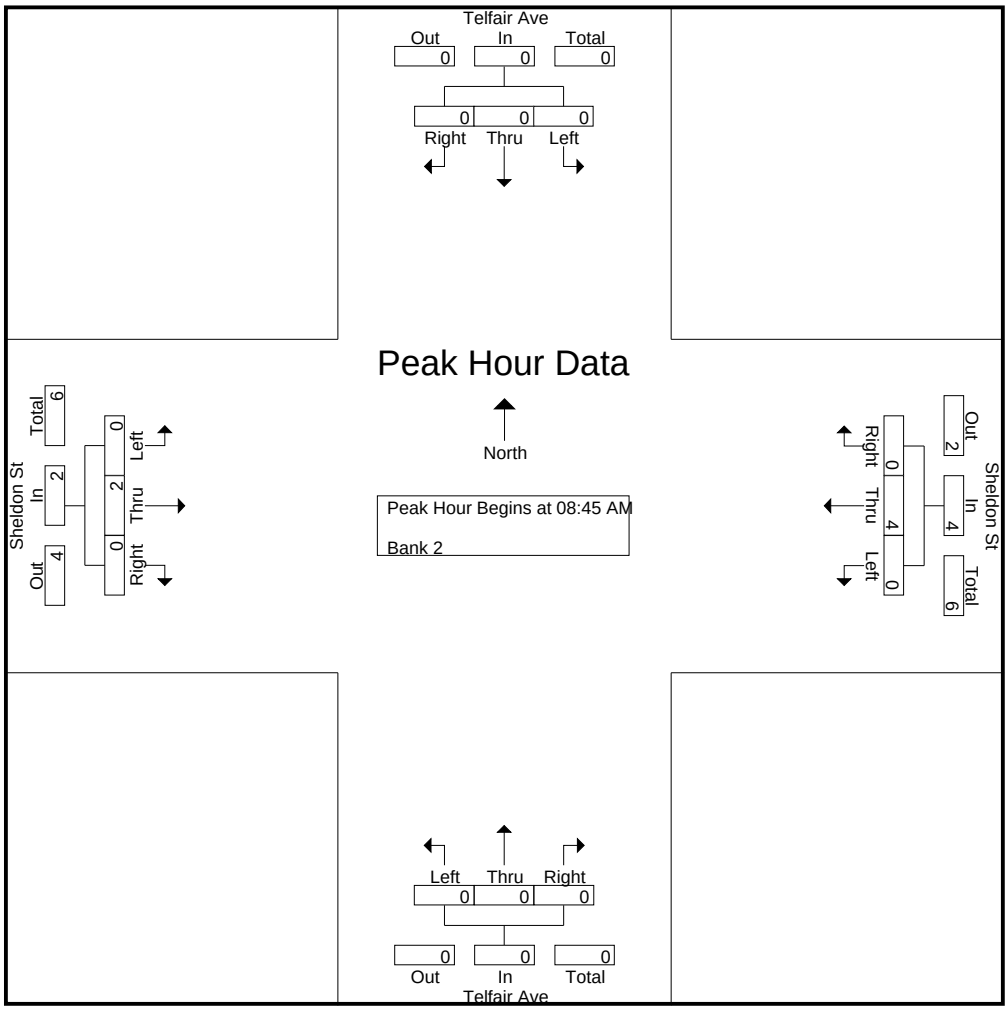

CITY TRAFFIC COUNTERS

626.991.7522

www.ctcounters.com

File Name : TelfairSheldon_5Axle
Site Code : 00000000
Start Date : 1/15/2014
Page No : 1

Groups Printed- Bank 2

	Telfair Ave Southbound			Sheldon St Westbound			Telfair Ave Northbound			Sheldon St Eastbound			
Start Time	Left	Thru	Right	Left	Thru	Right	Left	Thru	Right	Left	Thru	Right	Int. Total
07:00 AM	0	0	0	0	2	0	0	0	0	0	4	0	6
07:15 AM	0	0	0	0	0	0	0	0	0	0	1	0	1
07:30 AM	0	0	0	0	2	0	0	0	0	0	1	0	3
07:45 AM	0	0	0	0	1	0	0	0	0	0	1	0	2
Total	0	0	0	0	5	0	0	0	0	0	7	0	12
08:00 AM	0	0	0	0	2	0	0	0	0	0	5	0	7
08:15 AM	0	0	0	0	1	0	0	0	0	0	1	0	2
08:30 AM	0	0	0	0	2	0	0	0	0	0	2	0	4
08:45 AM	0	0	0	0	0	0	0	0	0	0	2	0	2
Total	0	0	0	0	5	0	0	0	0	0	10	0	15
09:00 AM	0	0	0	0	3	0	0	0	0	0	2	0	5
09:15 AM	0	0	0	0	3	0	0	0	0	0	1	0	4
09:30 AM	0	0	0	0	4	0	0	0	0	0	4	0	8
09:45 AM	0	0	0	0	3	0	0	0	0	0	2	0	5
Total	0	0	0	0	13	0	0	0	0	0	9	0	22
12:00 PM	0	0	0	0	5	0	0	0	0	0	2	0	7
12:15 PM	0	0	0	1	0	0	0	0	0	0	4	0	5
12:30 PM	0	0	0	0	3	0	0	0	0	0	4	0	7
12:45 PM	0	0	0	0	2	0	0	0	0	0	2	0	4
Total	0	0	0	1	10	0	0	0	0	0	12	0	23
01:00 PM	0	0	0	0	0	0	1	0	0	0	2	0	3
01:15 PM	0	0	0	0	1	0	0	0	0	0	2	0	3
01:30 PM	0	0	0	0	0	0	0	0	0	0	1	0	1
01:45 PM	0	0	0	0	3	0	0	0	0	0	4	0	7
Total	0	0	0	0	4	0	1	0	0	0	9	0	14
03:00 PM	0	0	0	0	0	0	0	0	0	0	2	0	2
03:15 PM	0	0	0	0	1	0	0	0	0	0	2	0	3
03:30 PM	0	0	0	0	1	0	0	0	0	0	1	0	2
03:45 PM	0	0	0	0	0	0	0	0	0	0	1	0	1
Total	0	0	0	0	2	0	0	0	0	0	6	0	8
04:30 PM	0	0	0	0	2	0	0	0	0	0	0	0	2
Total	0	0	0	0	2	0	0	0	0	0	0	0	2
05:45 PM	0	0	0	0	0	0	0	0	0	0	1	0	1
Total	0	0	0	0	0	0	0	0	0	0	1	0	1
Grand Total	0	0	0	1	41	0	1	0	0	0	54	0	97
Apprch %	0	0	0	2.4	97.6	0	100	0	0	0	100	0	
Total %	0	0	0	1	42.3	0	1	0	0	0	55.7	0	

CITY TRAFFIC COUNTERS

626.991.7522

www.ctcounters.com

File Name : TelfairSheldon_5Axle
Site Code : 00000000
Start Date : 1/15/2014
Page No : 2

	Telfair Ave Southbound				Sheldon St Westbound				Telfair Ave Northbound				Sheldon St Eastbound				
Start Time	Left	Thru	Right	App. Total	Left	Thru	Right	App. Total	Left	Thru	Right	App. Total	Left	Thru	Right	App. Total	Int. Total
Peak Hour Analysis From 07:00 AM to 09:45 AM - Peak 1 of 1																	
Peak Hour for Entire Intersection Begins at 09:00 AM																	
09:00 AM	0	0	0	0	0	3	0	3	0	0	0	0	0	2	0	2	5
09:15 AM	0	0	0	0	0	3	0	3	0	0	0	0	0	1	0	1	4
09:30 AM	0	0	0	0	0	**4**	0	**4**	0	0	0	0	0	**4**	0	**4**	**8**
09:45 AM	0	0	0	0	0	3	0	3	0	0	0	0	0	2	0	2	5
Total Volume	0	0	0	0	0	13	0	13	0	0	0	0	0	9	0	9	22
% App. Total	0	0	0		0	100	0		0	0	0		0	100	0		
PHF	.000	.000	.000	.000	.000	.813	.000	.813	.000	.000	.000	.000	.000	.563	.000	.563	.688

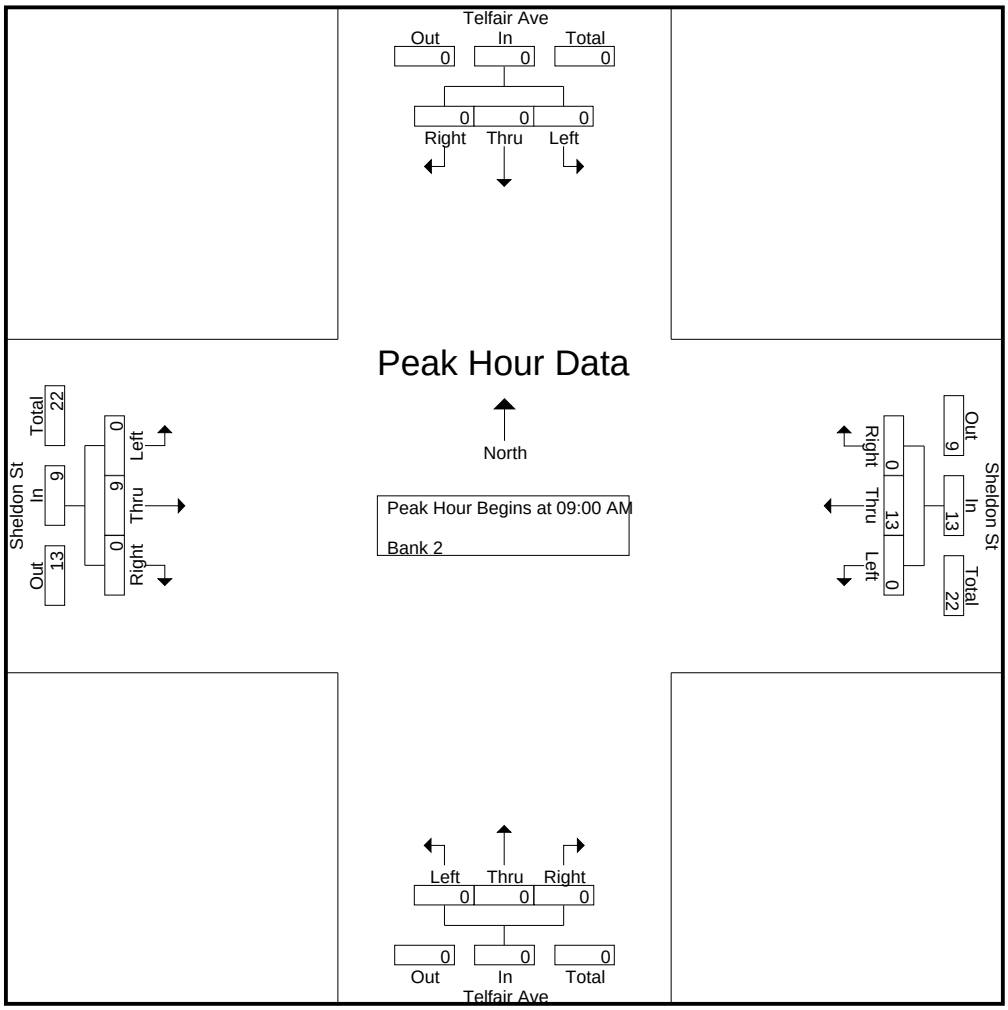

CITY TRAFFIC COUNTERS

626.991.7522

www.ctcounters.com

File Name : TelfairSheldon_5Axle
Site Code : 00000000
Start Date : 1/15/2014
Page No : 3

	Telfair Ave Southbound				Sheldon St Westbound				Telfair Ave Northbound				Sheldon St Eastbound				
Start Time	Left	Thru	Right	App. Total	Left	Thru	Right	App. Total	Left	Thru	Right	App. Total	Left	Thru	Right	App. Total	Int. Total
Peak Hour Analysis From 10:00 AM to 01:45 PM - Peak 1 of 1																	
Peak Hour for Entire Intersection Begins at 12:00 PM																	
12:00 PM	0	0	0	0	0	**5**	0	**5**	0	0	0	0	0	2	0	2	**7**
12:15 PM	0	0	0	0	**1**	0	0	1	0	0	0	0	0	**4**	0	**4**	5
12:30 PM	0	0	0	0	0	3	0	3	0	0	0	0	0	4	0	4	7
12:45 PM	0	0	0	0	0	2	0	2	0	0	0	0	0	2	0	2	4
Total Volume	0	0	0	0	1	10	0	11	0	0	0	0	0	12	0	12	23
% App. Total	0	0	0		9.1	90.9	0		0	0	0		0	100	0		
PHF	.000	.000	.000	.000	.250	.500	.000	.550	.000	.000	.000	.000	.000	.750	.000	.750	.821

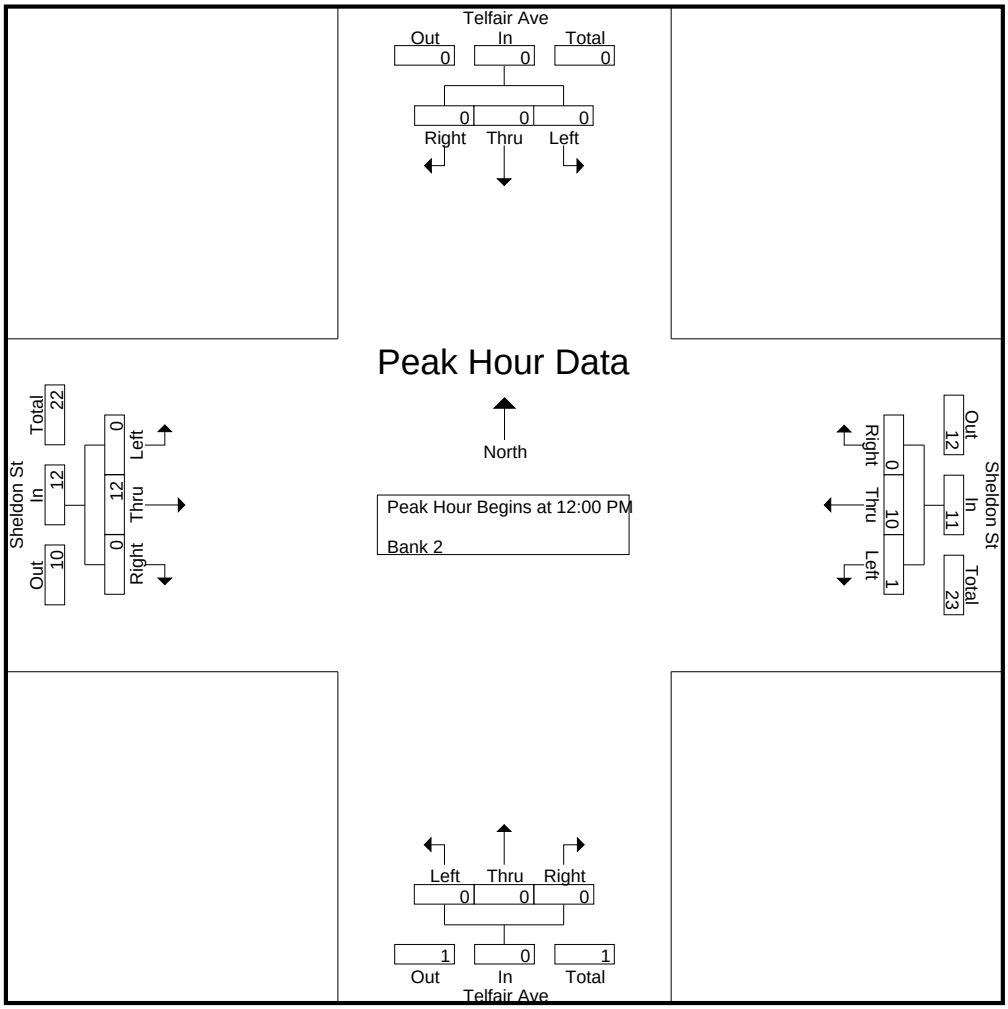

CITY TRAFFIC COUNTERS

626.991.7522

www.ctcounters.com

File Name : TelfairSheldon_5Axle
Site Code : 00000000
Start Date : 1/15/2014
Page No : 4

	Telfair Ave Southbound				Sheldon St Westbound				Telfair Ave Northbound				Sheldon St Eastbound				
Start Time	Left	Thru	Right	App. Total	Left	Thru	Right	App. Total	Left	Thru	Right	App. Total	Left	Thru	Right	App. Total	Int. Total
Peak Hour Analysis From 02:00 PM to 05:45 PM - Peak 1 of 1																	
Peak Hour for Entire Intersection Begins at 03:00 PM																	
03:00 PM	0	0	0	0	0	0	0	0	0	0	0	0	0	**2**	0	**2**	2
03:15 PM	0	0	0	0	0	**1**	0	**1**	0	0	0	0	0	2	0	2	**3**
03:30 PM	0	0	0	0	0	1	0	1	0	0	0	0	0	1	0	1	2
03:45 PM	0	0	0	0	0	0	0	0	0	0	0	0	0	1	0	1	1
Total Volume	0	0	0	0	0	2	0	2	0	0	0	0	0	6	0	6	8
% App. Total	0	0	0		0	100	0		0	0	0		0	100	0		
PHF	.000	.000	.000	.000	.000	.500	.000	.500	.000	.000	.000	.000	.000	.750	.000	.750	.667

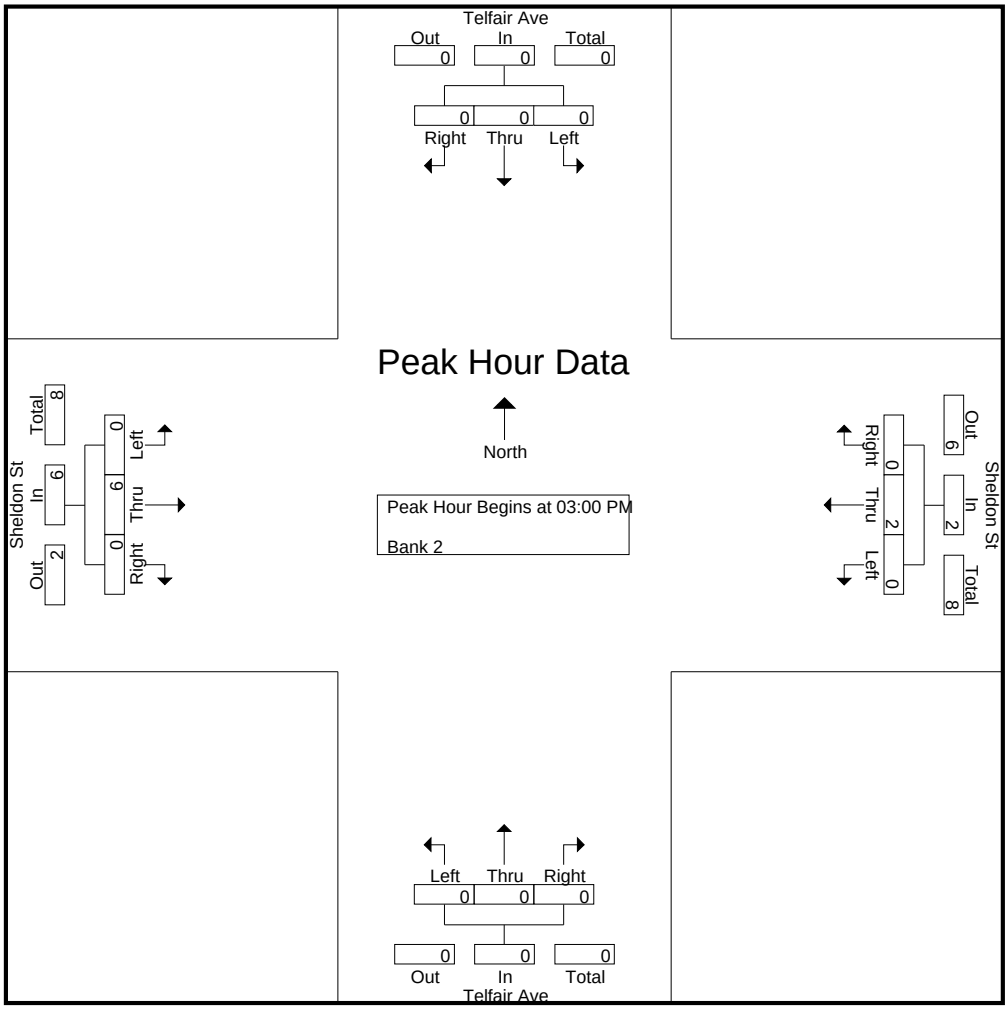

CITY TRAFFIC COUNTERS

626.991.7522

www.ctcounters.com

File Name : SanFSheldon
Site Code : 00000000
Start Date : 1/15/2014
Page No : 1

Groups Printed- Unshifted

	San Fernando Rd Southbound			Sheldon St Westbound			San Fernando Rd Northbound			Sheldon St Eastbound			
Start Time	Left	Thru	Right	Left	Thru	Right	Left	Thru	Right	Left	Thru	Right	Int. Total
07:00 AM	11	61	9	16	157	11	25	111	11	5	78	38	533
07:15 AM	11	91	23	22	174	14	42	140	5	4	74	19	619
07:30 AM	13	88	25	23	219	26	32	135	9	12	77	35	694
07:45 AM	32	137	39	24	230	37	45	189	14	12	82	34	875
Total	67	377	96	85	780	88	144	575	39	33	311	126	2721
08:00 AM	20	91	22	10	215	27	45	170	17	14	64	33	728
08:15 AM	28	79	13	20	188	22	26	115	14	8	61	30	604
08:30 AM	10	54	11	12	179	7	28	100	6	11	60	14	492
08:45 AM	5	82	26	17	153	7	28	83	7	12	53	15	488
Total	63	306	72	59	735	63	127	468	44	45	238	92	2312
09:00 AM	9	53	12	10	111	6	15	75	5	6	57	22	381
09:15 AM	13	66	7	14	100	13	25	75	8	7	46	26	400
09:30 AM	16	65	12	7	79	10	19	86	10	10	61	17	392
09:45 AM	12	59	13	16	77	19	21	62	13	9	61	17	379
Total	50	243	44	47	367	48	80	298	36	32	225	82	1552
12:00 PM	20	70	10	9	78	13	25	79	14	6	86	28	438
12:15 PM	15	62	7	20	83	5	21	67	16	14	64	27	401
12:30 PM	16	79	16	13	79	13	24	61	15	15	77	34	442
12:45 PM	13	58	12	12	83	7	19	64	7	10	90	32	407
Total	64	269	45	54	323	38	89	271	52	45	317	121	1688
01:00 PM	15	72	16	12	88	9	23	63	11	12	75	28	424
01:15 PM	19	83	11	11	77	17	20	74	14	16	79	19	440
01:30 PM	14	69	15	16	86	13	27	78	7	18	82	18	443
01:45 PM	12	75	11	8	76	16	27	76	11	13	98	25	448
Total	60	299	53	47	327	55	97	291	43	59	334	90	1755
03:00 PM	22	119	18	19	80	11	31	102	17	19	99	26	563
03:15 PM	22	92	16	9	83	21	37	90	21	16	98	20	525
03:30 PM	22	122	14	8	89	23	44	124	31	17	135	38	667
03:45 PM	24	119	14	12	113	16	25	109	16	25	138	26	637
Total	90	452	62	48	365	71	137	425	85	77	470	110	2392
04:00 PM	24	120	18	14	117	23	37	110	11	9	127	31	641
04:15 PM	23	104	15	12	113	12	37	77	23	17	134	22	589
04:30 PM	14	130	17	20	103	17	41	115	22	19	147	51	696
04:45 PM	23	126	8	17	140	28	36	96	12	25	140	26	677
Total	84	480	58	63	473	80	151	398	68	70	548	130	2603
05:00 PM	27	118	15	19	117	16	41	134	14	15	148	24	688
05:15 PM	21	111	10	14	94	13	32	94	21	12	171	27	620
05:30 PM	18	110	11	12	88	16	29	102	14	17	140	33	590
05:45 PM	20	116	4	6	88	14	30	92	10	15	134	23	552
Total	86	455	40	51	387	59	132	422	59	59	593	107	2450
Grand Total	564	2881	470	454	3757	502	957	3148	426	420	3036	858	17473
Apprch %	14.4	73.6	12	9.6	79.7	10.7	21.1	69.5	9.4	9.7	70.4	19.9	
Total %	3.2	16.5	2.7	2.6	21.5	2.9	5.5	18	2.4	2.4	17.4	4.9	

CITY TRAFFIC COUNTERS

626.991.7522

www.ctcounters.com

File Name : SanFSheldon
Site Code : 00000000
Start Date : 1/15/2014
Page No : 2

	San Fernando Rd Southbound				Sheldon St Westbound				San Fernando Rd Northbound				Sheldon St Eastbound				
Start Time	Left	Thru	Right	App. Total	Left	Thru	Right	App. Total	Left	Thru	Right	App. Total	Left	Thru	Right	App. Total	Int. Total
Peak Hour Analysis From 07:00 AM to 09:45 AM - Peak 1 of 1																	
Peak Hour for Entire Intersection Begins at 07:15 AM																	
07:15 AM	11	91	23	125	22	174	14	210	42	140	5	187	4	74	19	97	619
07:30 AM	13	88	25	126	23	219	26	268	32	135	9	176	12	77	**35**	124	694
07:45 AM	**32**	**137**	**39**	**208**	**24**	**230**	**37**	**291**	**45**	**189**	14	**248**	12	**82**	34	**128**	**875**
08:00 AM	20	91	22	133	10	215	27	252	45	170	**17**	232	**14**	64	33	111	728
Total Volume	76	407	109	592	79	838	104	1021	164	634	45	843	42	297	121	460	2916
% App. Total	12.8	68.8	18.4		7.7	82.1	10.2		19.5	75.2	5.3		9.1	64.6	26.3		
PHF	.594	.743	.699	.712	.823	.911	.703	.877	.911	.839	.662	.850	.750	.905	.864	.898	.833

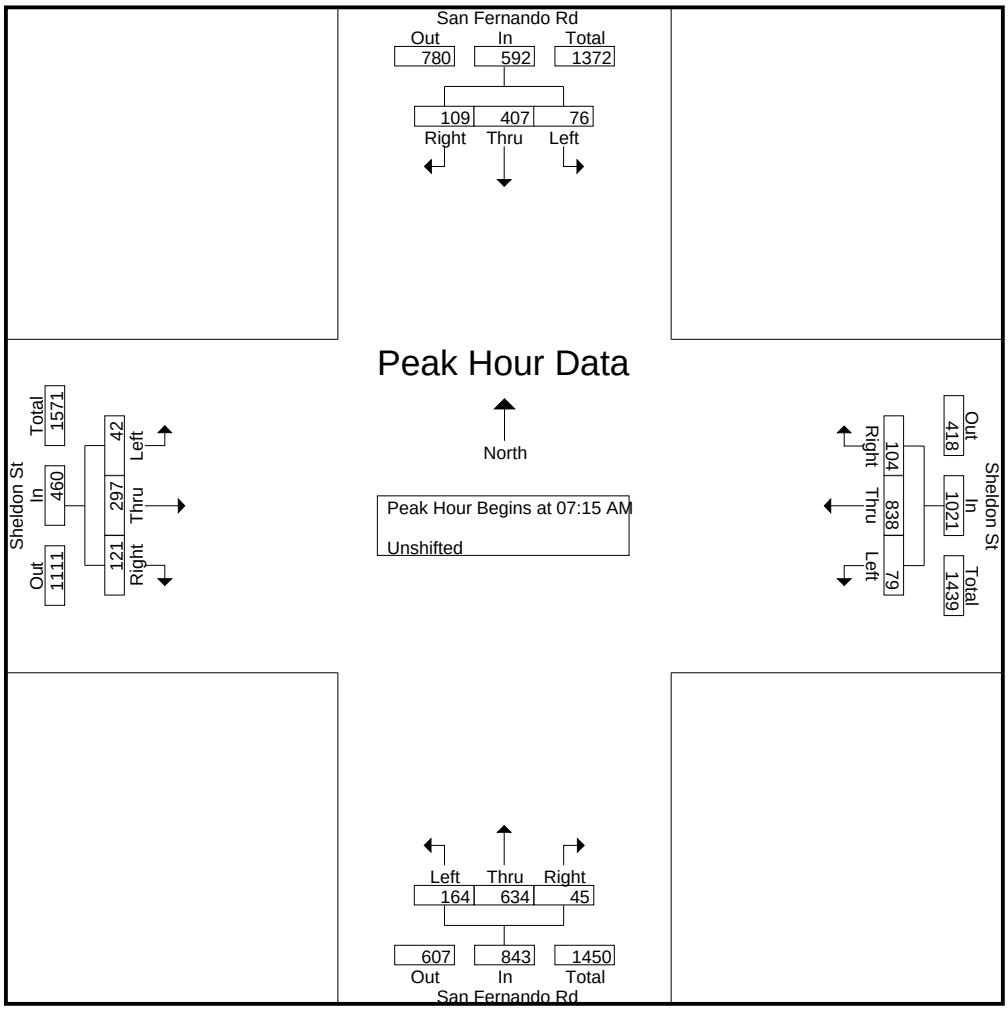

CITY TRAFFIC COUNTERS

626.991.7522

www.ctcounters.com

File Name : SanFSheldon
Site Code : 00000000
Start Date : 1/15/2014
Page No : 3

	San Fernando Rd Southbound				Sheldon St Westbound				San Fernando Rd Northbound				Sheldon St Eastbound				
Start Time	Left	Thru	Right	App. Total	Left	Thru	Right	App. Total	Left	Thru	Right	App. Total	Left	Thru	Right	App. Total	Int. Total
Peak Hour Analysis From 10:00 AM to 01:45 PM - Peak 1 of 1																	
Peak Hour for Entire Intersection Begins at 01:00 PM																	
01:00 PM	15	72	**16**	103	12	**88**	9	109	23	63	11	97	12	75	**28**	115	424
01:15 PM	**19**	**83**	11	**113**	11	77	**17**	105	20	74	**14**	108	16	79	19	114	440
01:30 PM	14	69	15	98	**16**	86	13	**115**	**27**	**78**	7	112	**18**	82	18	118	443
01:45 PM	12	75	11	98	8	76	16	100	27	76	11	**114**	13	**98**	25	**136**	**448**
Total Volume	60	299	53	412	47	327	55	429	97	291	43	431	59	334	90	483	1755
% App. Total	14.6	72.6	12.9		11	76.2	12.8		22.5	67.5	10		12.2	69.2	18.6		
PHF	.789	.901	.828	.912	.734	.929	.809	.933	.898	.933	.768	.945	.819	.852	.804	.888	.979

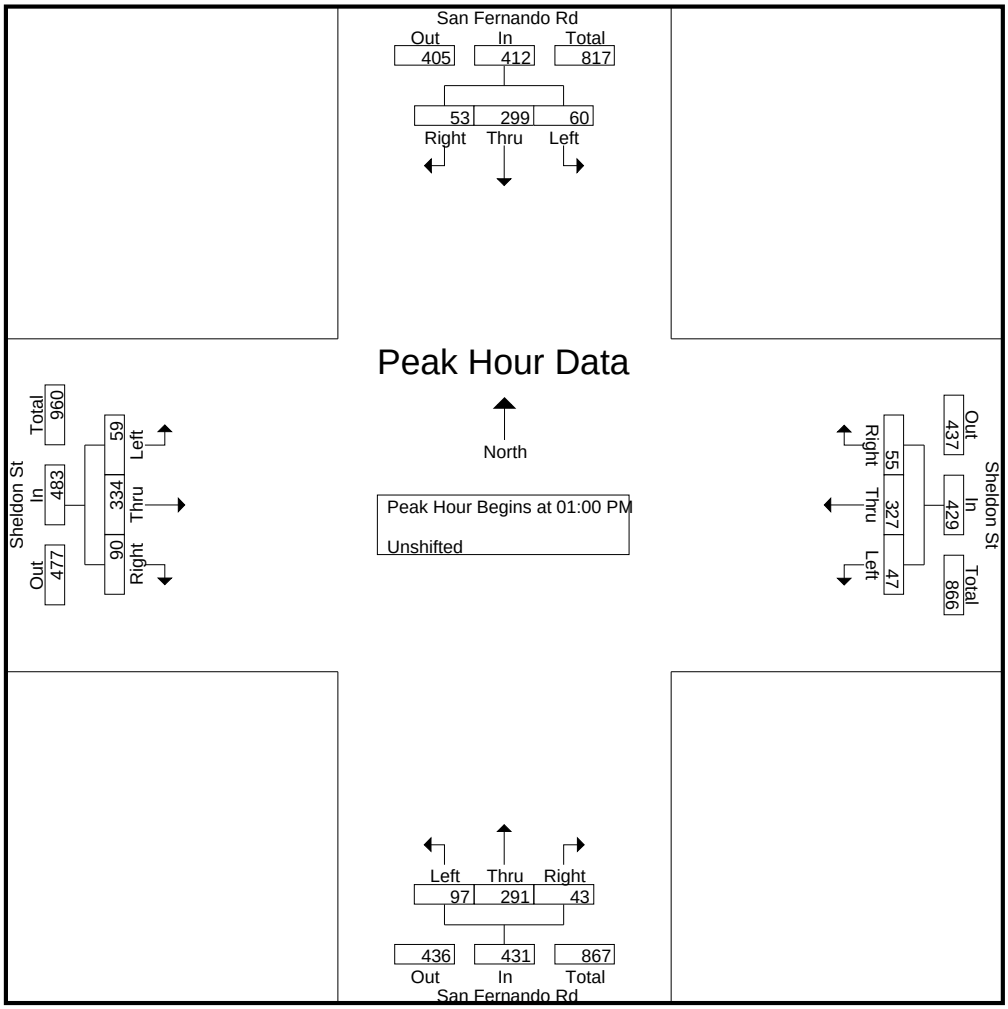

CITY TRAFFIC COUNTERS

626.991.7522

www.ctcounters.com

File Name : SanFSheldon
Site Code : 00000000
Start Date : 1/15/2014
Page No : 4

	San Fernando Rd Southbound				Sheldon St Westbound				San Fernando Rd Northbound				Sheldon St Eastbound				
Start Time	Left	Thru	Right	App. Total	Left	Thru	Right	App. Total	Left	Thru	Right	App. Total	Left	Thru	Right	App. Total	Int. Total
Peak Hour Analysis From 02:00 PM to 05:45 PM - Peak 1 of 1																	
Peak Hour for Entire Intersection Begins at 04:30 PM																	
04:30 PM	14	**130**	**17**	**161**	**20**	103	17	140	**41**	115	**22**	178	19	147	**51**	**217**	**696**
04:45 PM	23	126	8	157	17	**140**	**28**	**185**	36	96	12	144	**25**	140	26	191	677
05:00 PM	**27**	118	15	160	19	117	16	152	41	**134**	14	**189**	15	148	24	187	688
05:15 PM	21	111	10	142	14	94	13	121	32	94	21	147	12	**171**	27	210	620
Total Volume	85	485	50	620	70	454	74	598	150	439	69	658	71	606	128	805	2681
% App. Total	13.7	78.2	8.1		11.7	75.9	12.4		22.8	66.7	10.5		8.8	75.3	15.9		
PHF	.787	.933	.735	.963	.875	.811	.661	.808	.915	.819	.784	.870	.710	.886	.627	.927	.963

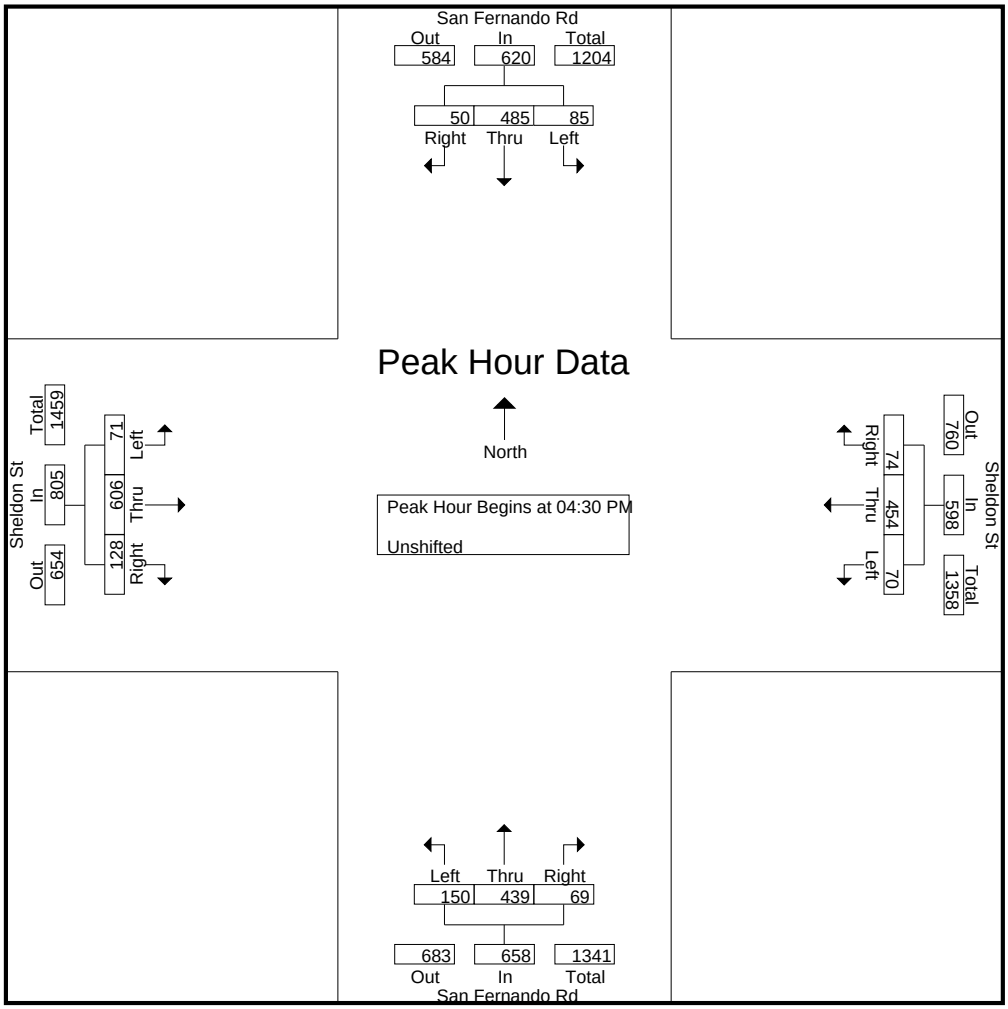

CITY TRAFFIC COUNTERS

626.991.7522

www.ctcounters.com

File Name : SanFSheldon_MC
Site Code : 00000000
Start Date : 1/15/2014
Page No : 1

Groups Printed- Bank 2

	San Fernando Rd Southbound			Sheldon St Westbound			San Fernando Rd Northbound			Sheldon St Eastbound			
Start Time	Left	Thru	Right	Left	Thru	Right	Left	Thru	Right	Left	Thru	Right	Int. Total
07:00 AM	0	0	0	0	2	0	0	1	0	0	2	0	5
07:15 AM	0	1	0	0	1	1	0	1	0	0	1	0	5
07:30 AM	1	0	0	0	0	0	1	1	0	0	1	1	5
07:45 AM	0	0	0	0	0	0	0	1	0	0	1	0	2
Total	1	1	0	0	3	1	1	4	0	0	5	1	17
08:00 AM	1	0	0	0	1	0	0	1	0	0	0	0	3
08:15 AM	0	1	0	0	1	1	0	0	0	0	0	0	3
08:30 AM	0	0	0	0	2	0	0	0	0	0	3	0	5
08:45 AM	0	0	0	0	5	0	0	0	0	0	0	0	5
Total	1	1	0	0	9	1	0	1	0	0	3	0	16
09:15 AM	0	1	0	0	0	0	0	0	0	0	0	0	1
09:45 AM	0	1	0	1	0	0	0	0	0	0	0	0	2
Total	0	2	0	1	0	0	0	0	0	0	0	0	3
12:00 PM	0	1	0	0	0	0	0	0	0	0	1	0	2
12:30 PM	1	0	0	0	1	0	0	0	0	0	1	0	3
Total	1	1	0	0	1	0	0	0	0	0	2	0	5
01:00 PM	0	0	0	0	1	1	0	0	0	0	0	0	2
01:30 PM	0	0	0	0	0	0	0	0	0	0	1	0	1
01:45 PM	0	1	0	0	0	0	0	0	0	0	0	0	1
Total	0	1	0	0	1	1	0	0	0	0	1	0	4
03:00 PM	0	1	0	0	0	2	0	0	0	0	0	0	3
03:15 PM	0	1	0	0	1	0	0	1	0	0	0	0	3
03:30 PM	0	0	0	0	0	0	0	0	0	0	1	0	1
03:45 PM	0	0	0	0	1	0	0	0	0	0	0	0	1
Total	0	2	0	0	2	2	0	1	0	0	1	0	8
04:00 PM	0	2	0	0	0	0	1	0	0	0	2	0	5
04:15 PM	0	0	0	0	0	0	0	1	0	0	0	0	1
04:45 PM	0	0	0	0	0	0	0	2	0	0	0	0	2
Total	0	2	0	0	0	0	1	3	0	0	2	0	8
05:00 PM	0	1	0	1	0	1	0	1	0	1	0	0	5
05:15 PM	0	0	0	0	1	0	0	3	0	0	0	0	4
05:30 PM	0	0	1	0	0	0	0	0	0	0	1	0	2
05:45 PM	0	4	0	0	0	0	0	0	0	0	0	1	5
Total	0	5	1	1	1	1	0	4	0	1	1	1	16
Grand Total	3	15	1	2	17	6	2	13	0	1	15	2	77
Apprch %	15.8	78.9	5.3	8	68	24	13.3	86.7	0	5.6	83.3	11.1	
Total %	3.9	19.5	1.3	2.6	22.1	7.8	2.6	16.9	0	1.3	19.5	2.6	

CITY TRAFFIC COUNTERS

626.991.7522

www.ctcounters.com

File Name : SanFSheldon_MC
Site Code : 00000000
Start Date : 1/15/2014
Page No : 2

	San Fernando Rd Southbound				Sheldon St Westbound				San Fernando Rd Northbound				Sheldon St Eastbound				
Start Time	Left	Thru	Right	App. Total	Left	Thru	Right	App. Total	Left	Thru	Right	App. Total	Left	Thru	Right	App. Total	Int. Total
Peak Hour Analysis From 07:00 AM to 09:45 AM - Peak 1 of 1																	
Peak Hour for Entire Intersection Begins at 07:00 AM																	
07:00 AM	0	0	0	0	0	**2**	0	**2**	0	**1**	0	1	0	**2**	0	**2**	**5**
07:15 AM	0	**1**	0	**1**	0	1	**1**	2	0	1	0	1	0	1	0	1	5
07:30 AM	**1**	0	0	1	0	0	0	0	**1**	1	0	**2**	0	1	**1**	2	5
07:45 AM	0	0	0	0	0	0	0	0	0	1	0	1	0	1	0	1	2
Total Volume	1	1	0	2	0	3	1	4	1	4	0	5	0	5	1	6	17
% App. Total	50	50	0		0	75	25		20	80	0		0	83.3	16.7		
PHF	.250	.250	.000	.500	.000	.375	.250	.500	.250	1.00	.000	.625	.000	.625	.250	.750	.850

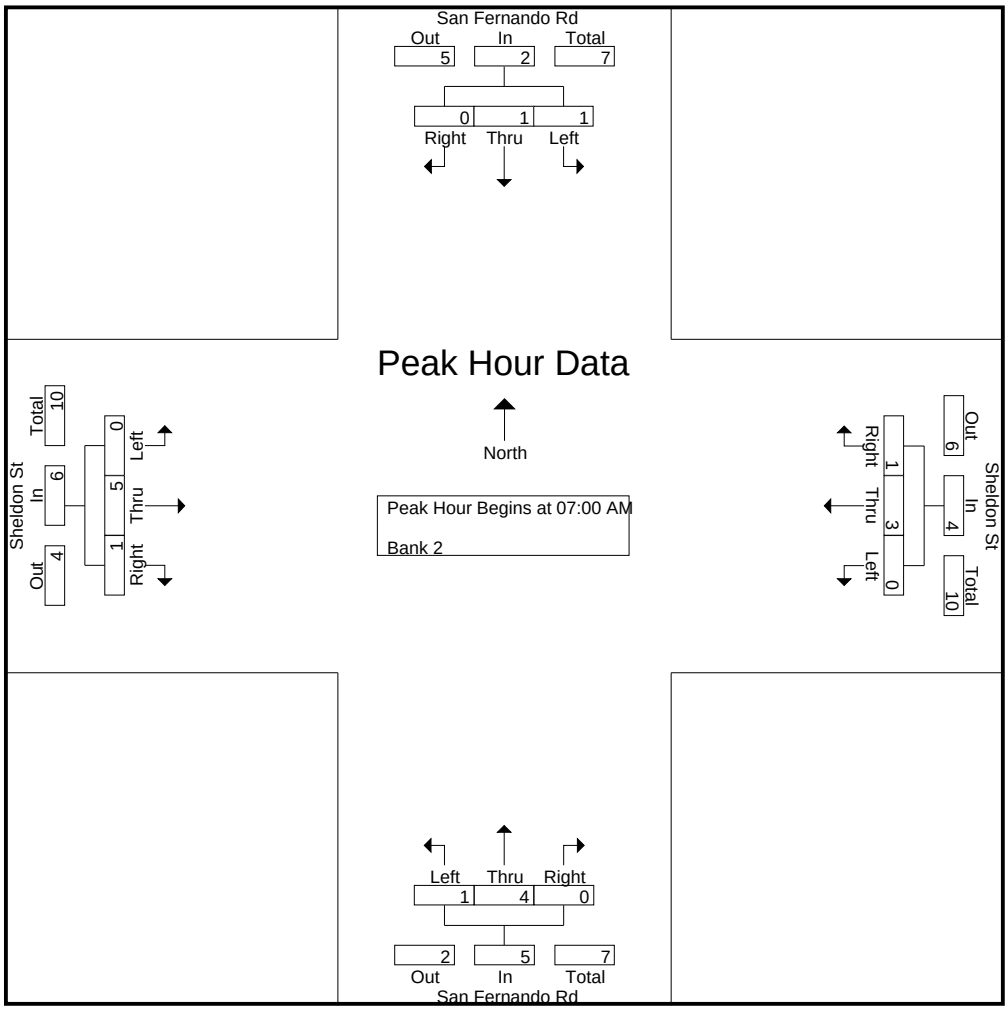

CITY TRAFFIC COUNTERS

626.991.7522

www.ctcounters.com

File Name : SanFSheldon_MC
Site Code : 00000000
Start Date : 1/15/2014
Page No : 3

	San Fernando Rd Southbound				Sheldon St Westbound				San Fernando Rd Northbound				Sheldon St Eastbound				
Start Time	Left	Thru	Right	App. Total	Left	Thru	Right	App. Total	Left	Thru	Right	App. Total	Left	Thru	Right	App. Total	Int. Total
Peak Hour Analysis From 10:00 AM to 01:45 PM - Peak 1 of 1																	
Peak Hour for Entire Intersection Begins at 11:45 AM																	
11:45 AM	0	0	0	0	0	0	0	0	0	0	0	0	0	0	0	0	0
12:00 PM	0	**1**	0	**1**	0	0	0	0	0	0	0	0	0	**1**	0	**1**	2
12:15 PM	0	0	0	0	0	0	0	0	0	0	0	0	0	0	0	0	0
12:30 PM	**1**	0	0	1	0	**1**	0	**1**	0	0	0	0	0	1	0	1	**3**
Total Volume	1	1	0	2	0	1	0	1	0	0	0	0	0	2	0	2	5
% App. Total	50	50	0		0	100	0		0	0	0		0	100	0		
PHF	.250	.250	.000	.500	.000	.250	.000	.250	.000	.000	.000	.000	.000	.500	.000	.500	.417

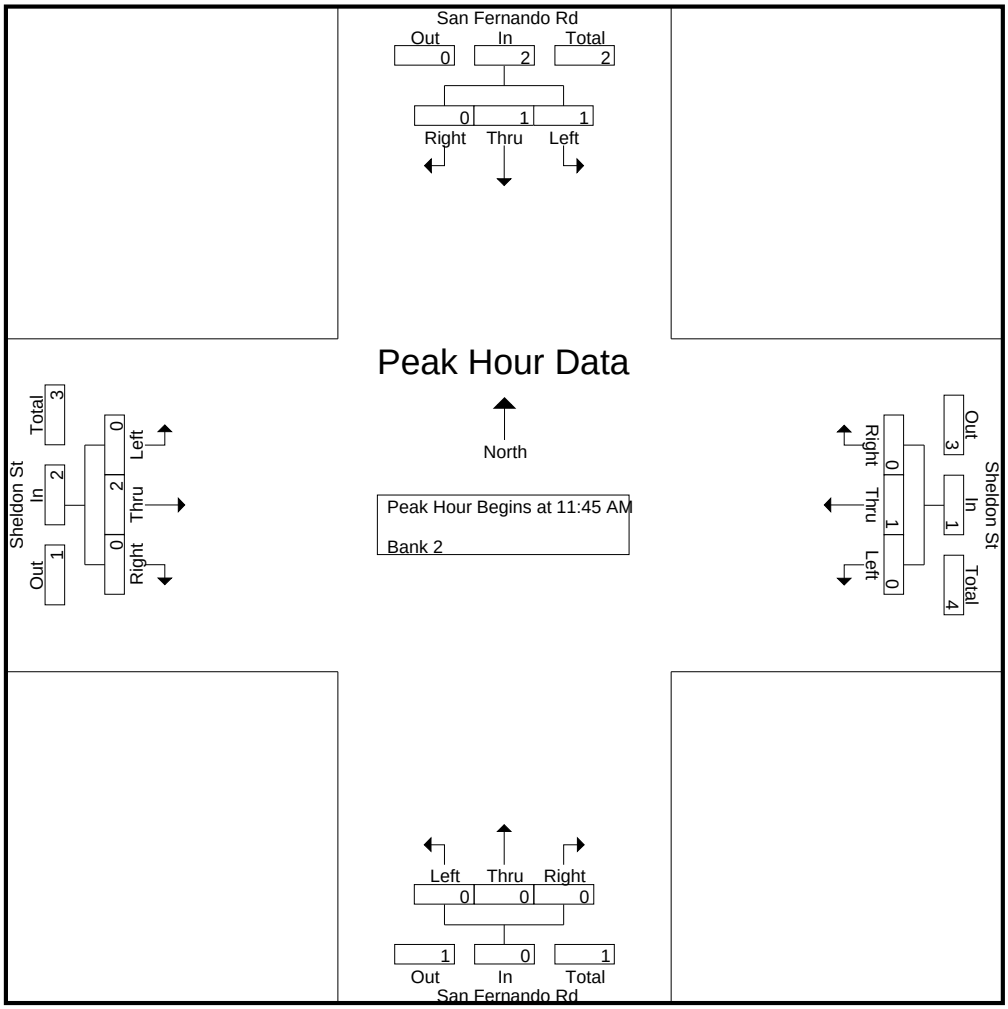

CITY TRAFFIC COUNTERS

626.991.7522

www.ctcounters.com

File Name : SanFSheldon_MC
Site Code : 00000000
Start Date : 1/15/2014
Page No : 4

	San Fernando Rd Southbound				Sheldon St Westbound				San Fernando Rd Northbound				Sheldon St Eastbound				
Start Time	Left	Thru	Right	App. Total	Left	Thru	Right	App. Total	Left	Thru	Right	App. Total	Left	Thru	Right	App. Total	Int. Total
Peak Hour Analysis From 02:00 PM to 05:45 PM - Peak 1 of 1																	
Peak Hour for Entire Intersection Begins at 05:00 PM																	
05:00 PM	0	1	0	1	**1**	0	**1**	**2**	0	1	0	1	**1**	0	0	**1**	**5**
05:15 PM	0	0	0	0	0	**1**	0	1	0	**3**	0	**3**	0	0	0	0	4
05:30 PM	0	0	**1**	1	0	0	0	0	0	0	0	0	0	**1**	0	1	2
05:45 PM	0	**4**	0	**4**	0	0	0	0	0	0	0	0	0	0	**1**	1	5
Total Volume	0	5	1	6	1	1	1	3	0	4	0	4	1	1	1	3	16
% App. Total	0	83.3	16.7		33.3	33.3	33.3		0	100	0		33.3	33.3	33.3		
PHF	.000	.313	.250	.375	.250	.250	.250	.375	.000	.333	.000	.333	.250	.250	.250	.750	.800

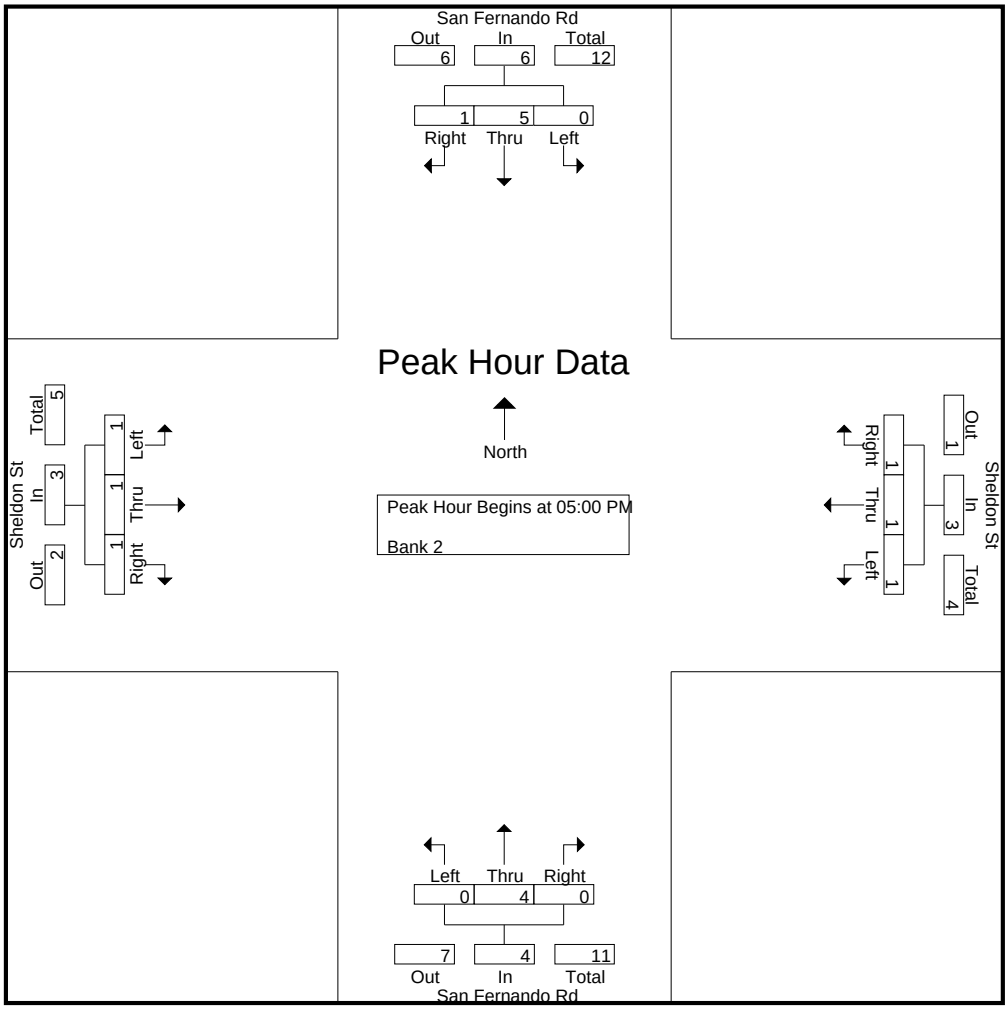

CITY TRAFFIC COUNTERS

626.991.7522

www.ctcounters.com

File Name : SanFSheldon_Bus
Site Code : 00000000
Start Date : 1/15/2014
Page No : 1

Groups Printed- Bank 1

	San Fernando Rd Southbound			Sheldon St Westbound			San Fernando Rd Northbound			Sheldon St Eastbound			
Start Time	Left	Thru	Right	Left	Thru	Right	Left	Thru	Right	Left	Thru	Right	Int. Total
07:00 AM	1	6	0	0	2	0	0	2	0	0	1	1	13
07:15 AM	0	4	0	1	0	0	0	2	0	0	1	1	9
07:30 AM	0	4	0	0	1	0	0	3	0	0	1	1	10
07:45 AM	0	2	0	0	2	0	0	2	0	0	1	0	7
Total	1	16	0	1	5	0	0	9	0	0	4	3	39
08:00 AM	0	2	0	0	0	0	0	2	0	0	0	0	4
08:15 AM	0	3	0	0	0	1	0	1	0	0	2	0	7
08:30 AM	1	3	0	0	1	0	0	3	0	0	4	0	12
08:45 AM	1	2	0	0	1	0	0	1	0	0	2	0	7
Total	2	10	0	0	2	1	0	7	0	0	8	0	30
09:00 AM	0	2	0	0	1	0	0	2	0	1	1	0	7
09:15 AM	0	0	0	0	0	0	0	1	0	0	1	0	2
09:30 AM	1	2	0	0	1	0	0	1	0	0	3	0	8
09:45 AM	0	0	0	0	0	0	0	2	0	0	1	0	3
Total	1	4	0	0	2	0	0	6	0	1	6	0	20
12:00 PM	1	1	0	0	2	0	0	1	0	0	0	0	5
12:15 PM	0	1	0	0	0	0	0	2	0	0	0	0	3
12:45 PM	0	2	0	0	0	0	0	1	0	0	0	0	3
Total	1	4	0	0	2	0	0	4	0	0	0	0	11
01:00 PM	0	1	1	0	0	0	0	1	0	0	1	0	4
01:15 PM	0	0	1	0	1	0	0	1	0	0	2	0	5
01:30 PM	0	1	0	0	1	0	0	0	0	0	3	0	5
01:45 PM	0	3	0	0	1	0	0	2	0	0	3	0	9
Total	0	5	2	0	3	0	0	4	0	0	9	0	23
03:00 PM	0	2	0	0	1	0	0	1	0	0	0	0	4
03:15 PM	0	2	0	1	0	0	1	2	0	0	2	0	8
03:30 PM	0	3	0	0	2	0	0	1	0	1	0	1	8
03:45 PM	0	1	1	0	1	0	0	2	0	0	0	0	5
Total	0	8	1	1	4	0	1	6	0	1	2	1	25
04:00 PM	0	1	0	0	1	0	0	3	0	0	4	0	9
04:15 PM	0	1	0	0	1	0	0	3	0	0	1	0	6
04:30 PM	0	1	0	0	0	0	0	4	0	0	1	0	6
04:45 PM	0	1	0	0	0	0	0	3	1	0	1	1	7
Total	0	4	0	0	2	0	0	13	1	0	7	1	28
05:15 PM	0	3	0	0	0	0	0	2	0	0	0	0	5
05:30 PM	0	1	0	0	0	0	0	1	1	0	0	1	4
05:45 PM	0	1	0	0	0	0	0	1	0	0	1	0	3
Total	0	5	0	0	0	0	0	4	1	0	1	1	12
Grand Total	5	56	3	2	20	1	1	53	2	2	37	6	188
Apprch %	7.8	87.5	4.7	8.7	87	4.3	1.8	94.6	3.6	4.4	82.2	13.3	
Total %	2.7	29.8	1.6	1.1	10.6	0.5	0.5	28.2	1.1	1.1	19.7	3.2	

CITY TRAFFIC COUNTERS

626.991.7522

www.ctcounters.com

File Name : SanFSheldon_Bus
Site Code : 00000000
Start Date : 1/15/2014
Page No : 2

	San Fernando Rd Southbound				Sheldon St Westbound				San Fernando Rd Northbound				Sheldon St Eastbound				
Start Time	Left	Thru	Right	App. Total	Left	Thru	Right	App. Total	Left	Thru	Right	App. Total	Left	Thru	Right	App. Total	Int. Total
Peak Hour Analysis From 07:00 AM to 09:45 AM - Peak 1 of 1																	
Peak Hour for Entire Intersection Begins at 07:00 AM																	
07:00 AM	**1**	**6**	0	**7**	0	**2**	0	**2**	0	2	0	2	0	**1**	**1**	**2**	**13**
07:15 AM	0	4	0	4	**1**	0	0	1	0	2	0	2	0	1	1	2	9
07:30 AM	0	4	0	4	0	1	0	1	0	**3**	0	**3**	0	1	1	2	10
07:45 AM	0	2	0	2	0	2	0	2	0	2	0	2	0	1	0	1	7
Total Volume	1	16	0	17	1	5	0	6	0	9	0	9	0	4	3	7	39
% App. Total	5.9	94.1	0		16.7	83.3	0		0	100	0		0	57.1	42.9		
PHF	.250	.667	.000	.607	.250	.625	.000	.750	.000	.750	.000	.750	.000	1.00	.750	.875	.750

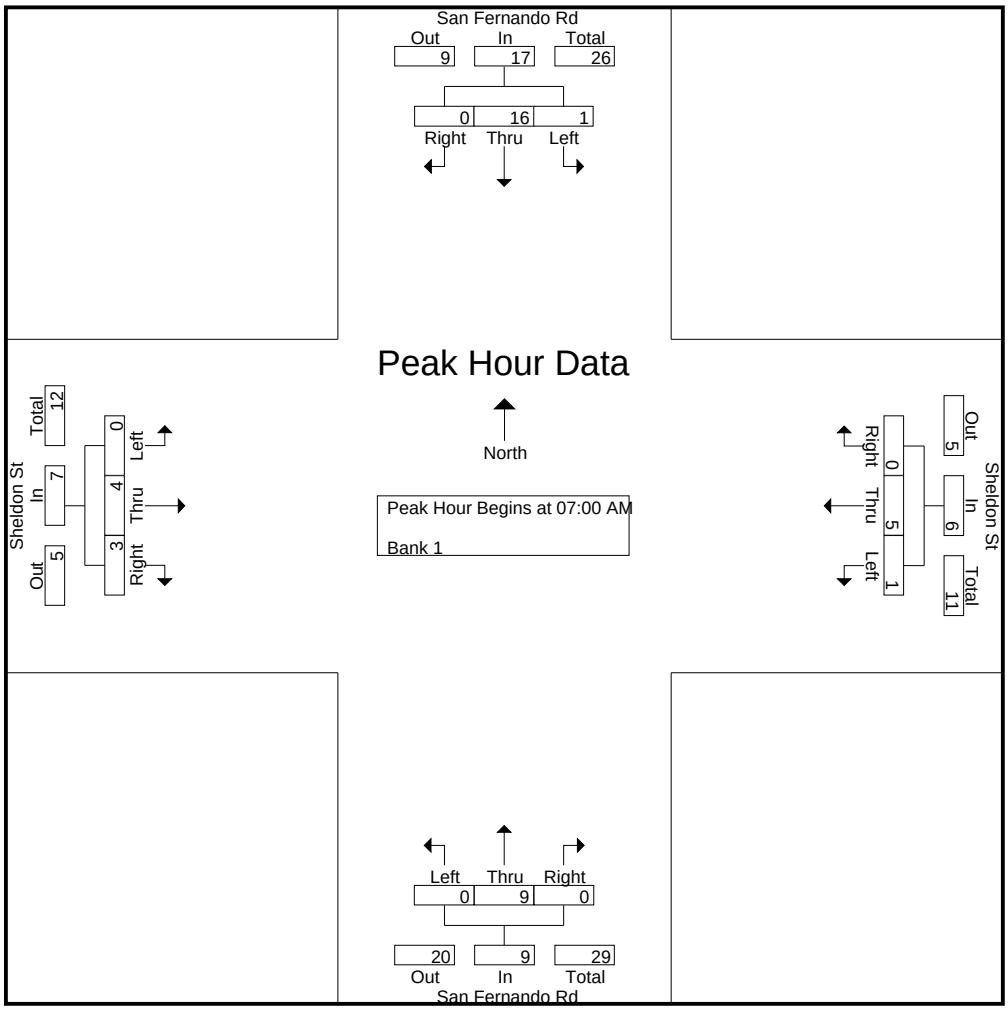

CITY TRAFFIC COUNTERS

626.991.7522

www.ctcounters.com

File Name : SanFSheldon_Bus
Site Code : 00000000
Start Date : 1/15/2014
Page No : 3

	San Fernando Rd Southbound				Sheldon St Westbound				San Fernando Rd Northbound				Sheldon St Eastbound				
Start Time	Left	Thru	Right	App. Total	Left	Thru	Right	App. Total	Left	Thru	Right	App. Total	Left	Thru	Right	App. Total	Int. Total
Peak Hour Analysis From 10:00 AM to 01:45 PM - Peak 1 of 1																	
Peak Hour for Entire Intersection Begins at 01:00 PM																	
01:00 PM	0	1	**1**	2	0	0	0	0	0	1	0	1	0	1	0	1	4
01:15 PM	0	0	1	1	0	**1**	0	**1**	0	1	0	1	0	2	0	2	5
01:30 PM	0	1	0	1	0	1	0	1	0	0	0	0	0	**3**	0	**3**	5
01:45 PM	0	**3**	0	**3**	0	1	0	1	0	**2**	0	**2**	0	3	0	3	**9**
Total Volume	0	5	2	7	0	3	0	3	0	4	0	4	0	9	0	9	23
% App. Total	0	71.4	28.6		0	100	0		0	100	0		0	100	0		
PHF	.000	.417	.500	.583	.000	.750	.000	.750	.000	.500	.000	.500	.000	.750	.000	.750	.639

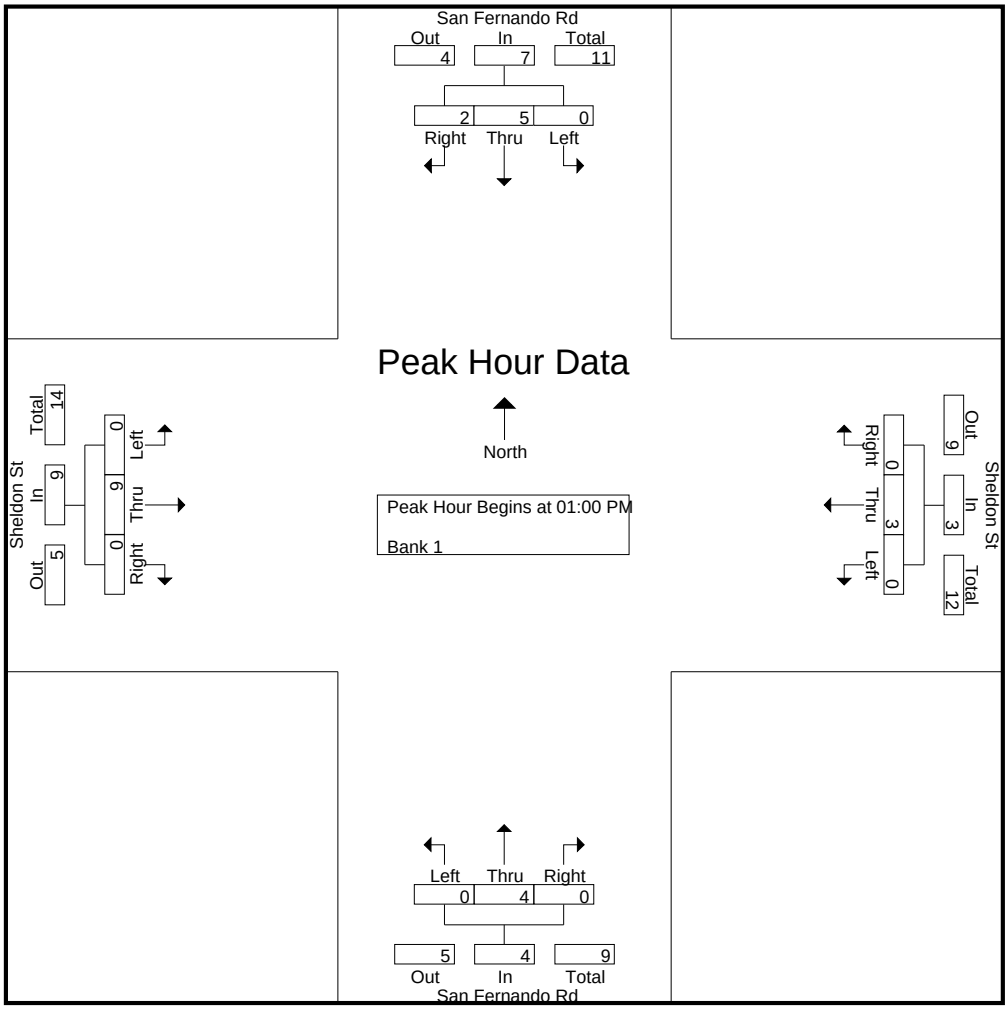

CITY TRAFFIC COUNTERS

626.991.7522

www.ctcounters.com

File Name : SanFSheldon_Bus
Site Code : 00000000
Start Date : 1/15/2014
Page No : 4

	San Fernando Rd Southbound				Sheldon St Westbound				San Fernando Rd Northbound				Sheldon St Eastbound				
Start Time	Left	Thru	Right	App. Total	Left	Thru	Right	App. Total	Left	Thru	Right	App. Total	Left	Thru	Right	App. Total	Int. Total
Peak Hour Analysis From 02:00 PM to 05:45 PM - Peak 1 of 1																	
Peak Hour for Entire Intersection Begins at 03:15 PM																	
03:15 PM	0	2	0	2	**1**	0	0	1	**1**	2	0	**3**	0	2	0	2	8
03:30 PM	0	**3**	0	**3**	0	**2**	0	**2**	0	1	0	1	**1**	0	**1**	2	8
03:45 PM	0	1	**1**	2	0	1	0	1	0	2	0	2	0	0	0	0	5
04:00 PM	0	1	0	1	0	1	0	1	0	**3**	0	3	0	**4**	0	**4**	**9**
Total Volume	0	7	1	8	1	4	0	5	1	8	0	9	1	6	1	8	30
% App. Total	0	87.5	12.5		20	80	0		11.1	88.9	0		12.5	75	12.5		
PHF	.000	.583	.250	.667	.250	.500	.000	.625	.250	.667	.000	.750	.250	.375	.250	.500	.833

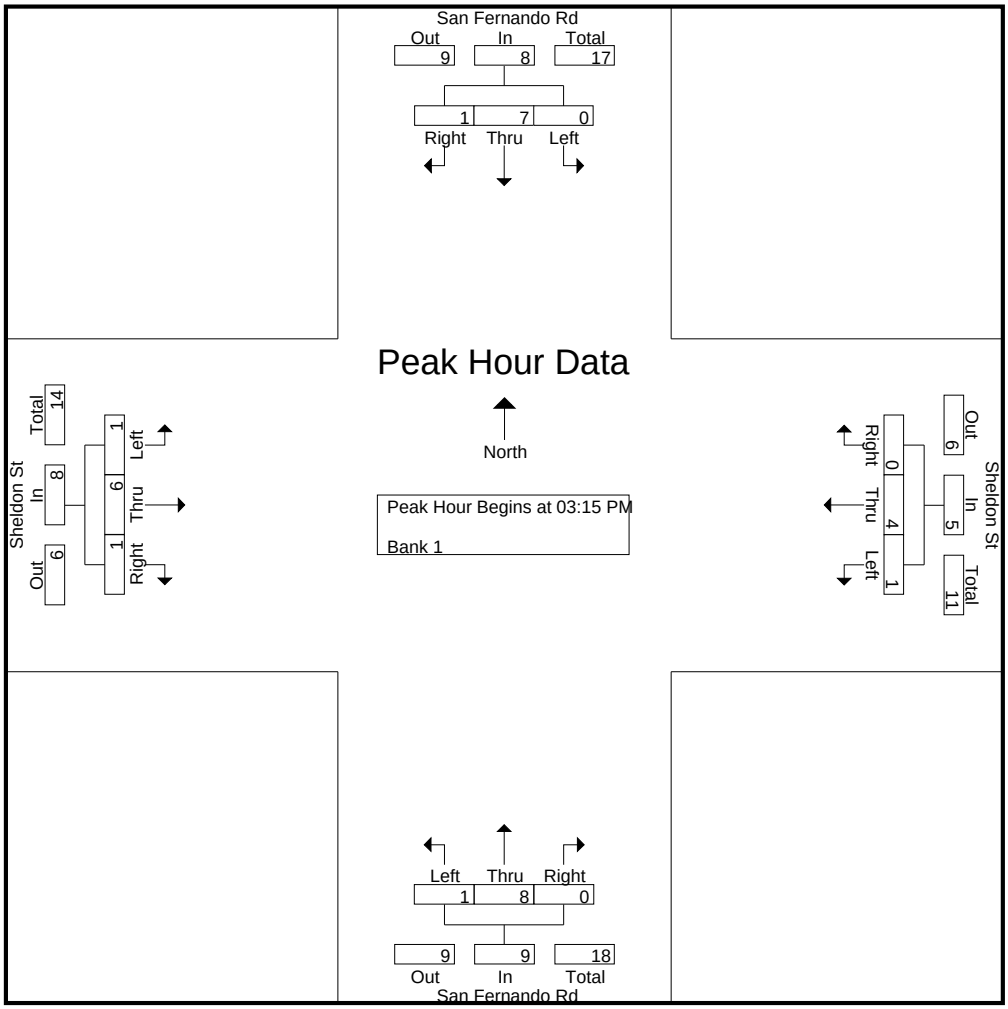

CITY TRAFFIC COUNTERS

626.991.7522

www.ctcounters.com

File Name : SanFSheldon_2Axle
Site Code : 00000000
Start Date : 1/15/2014
Page No : 1

Groups Printed- Unshifted

	San Fernando Rd Southbound			Sheldon St Westbound			San Fernando Rd Northbound			Sheldon St Eastbound			
Start Time	Left	Thru	Right	Left	Thru	Right	Left	Thru	Right	Left	Thru	Right	Int. Total
07:00 AM	0	3	0	0	6	0	0	1	0	0	4	0	14
07:15 AM	0	2	0	1	2	0	0	0	0	0	3	0	8
07:30 AM	1	6	0	1	2	0	1	2	0	1	4	0	18
07:45 AM	1	9	0	1	3	2	0	0	0	0	4	0	20
Total	2	20	0	3	13	2	1	3	0	1	15	0	60
08:00 AM	2	11	0	1	5	0	0	4	0	1	3	0	27
08:15 AM	2	14	0	4	9	2	1	2	1	0	5	0	40
08:30 AM	2	4	0	2	7	0	0	4	2	1	4	1	27
08:45 AM	0	6	2	5	12	2	0	5	1	1	3	1	38
Total	6	35	2	12	33	4	1	15	4	3	15	2	132
09:00 AM	0	5	0	5	10	2	2	6	1	0	8	0	39
09:15 AM	0	7	0	6	10	0	1	6	2	2	7	2	43
09:30 AM	3	9	1	2	7	2	1	6	2	1	5	3	42
09:45 AM	0	2	3	1	4	2	0	3	4	0	6	1	26
Total	3	23	4	14	31	6	4	21	9	3	26	6	150
12:00 PM	0	3	0	1	4	2	0	6	1	0	4	0	21
12:15 PM	2	6	1	1	4	0	0	5	3	1	4	0	27
12:30 PM	3	1	0	1	2	1	6	3	1	0	5	0	23
12:45 PM	1	4	0	0	2	1	4	5	3	1	2	0	23
Total	6	14	1	3	12	4	10	19	8	2	15	0	94
01:00 PM	2	4	0	1	2	2	6	6	3	1	5	2	34
01:15 PM	1	3	0	3	4	1	1	6	1	0	3	2	25
01:30 PM	0	5	0	5	4	0	2	8	3	0	4	2	33
01:45 PM	0	0	2	1	7	2	1	8	4	0	9	1	35
Total	3	12	2	10	17	5	10	28	11	1	21	7	127
03:00 PM	0	12	0	2	9	0	1	9	2	0	8	0	43
03:15 PM	0	7	0	3	6	0	0	4	1	0	7	0	28
03:30 PM	1	1	1	1	8	2	5	5	7	1	9	0	41
03:45 PM	3	0	0	1	4	1	1	5	2	1	9	1	28
Total	4	20	1	7	27	3	7	23	12	2	33	1	140
04:00 PM	1	1	0	2	3	1	3	1	4	1	8	0	25
04:15 PM	0	3	1	0	1	0	2	2	3	1	6	0	19
04:30 PM	1	2	0	0	4	2	0	6	2	0	4	0	21
04:45 PM	1	3	1	1	1	3	0	2	4	1	7	0	24
Total	3	9	2	3	9	6	5	11	13	3	25	0	89
05:00 PM	0	1	0	0	1	2	0	6	1	1	4	0	16
05:15 PM	1	0	1	0	1	4	0	1	1	0	6	0	15
05:30 PM	0	0	0	2	0	1	0	6	2	1	10	0	22
05:45 PM	1	1	0	0	1	0	1	2	2	0	6	1	15
Total	2	2	1	2	3	7	1	15	6	2	26	1	68
Grand Total	29	135	13	54	145	37	39	135	63	17	176	17	860
Apprch %	16.4	76.3	7.3	22.9	61.4	15.7	16.5	57	26.6	8.1	83.8	8.1	
Total %	3.4	15.7	1.5	6.3	16.9	4.3	4.5	15.7	7.3	2	20.5	2	

CITY TRAFFIC COUNTERS

626.991.7522

www.ctcounters.com

File Name : SanFSheldon_2Axle
Site Code : 00000000
Start Date : 1/15/2014
Page No : 2

	San Fernando Rd Southbound				Sheldon St Westbound				San Fernando Rd Northbound				Sheldon St Eastbound				
Start Time	Left	Thru	Right	App. Total	Left	Thru	Right	App. Total	Left	Thru	Right	App. Total	Left	Thru	Right	App. Total	Int. Total
Peak Hour Analysis From 07:00 AM to 09:45 AM - Peak 1 of 1																	
Peak Hour for Entire Intersection Begins at 08:45 AM																	
08:45 AM	0	6	**2**	8	5	**12**	**2**	**19**	0	5	1	6	1	3	1	5	38
09:00 AM	0	5	0	5	5	10	2	17	**2**	**6**	1	**9**	0	**8**	0	8	39
09:15 AM	0	7	0	7	**6**	10	0	16	1	6	**2**	9	**2**	7	2	**11**	**43**
09:30 AM	**3**	**9**	1	**13**	2	7	2	11	1	6	2	9	1	5	**3**	9	42
Total Volume	3	27	3	33	18	39	6	63	4	23	6	33	4	23	6	33	162
% App. Total	9.1	81.8	9.1		28.6	61.9	9.5		12.1	69.7	18.2		12.1	69.7	18.2		
PHF	.250	.750	.375	.635	.750	.813	.750	.829	.500	.958	.750	.917	.500	.719	.500	.750	.942

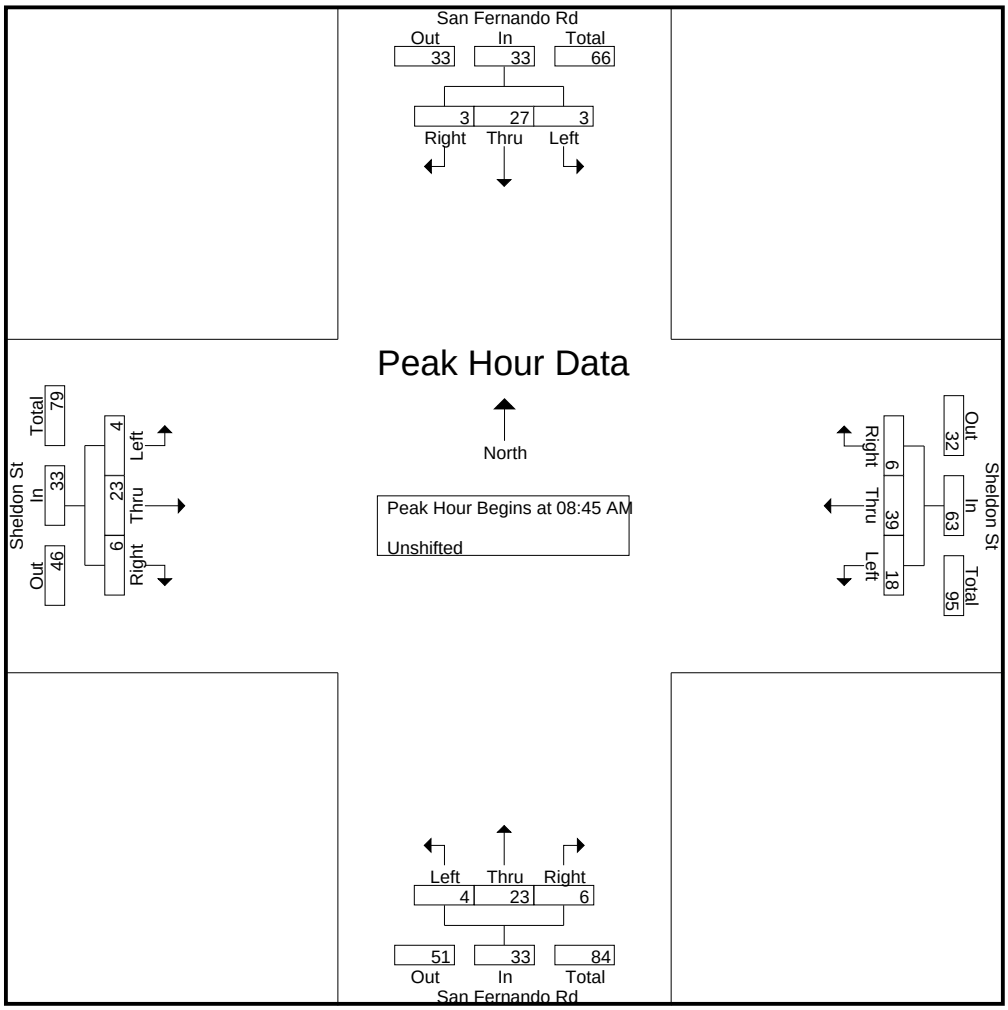

CITY TRAFFIC COUNTERS

626.991.7522

www.ctcounters.com

File Name : SanFSheldon_2Axle
Site Code : 00000000
Start Date : 1/15/2014
Page No : 3

	San Fernando Rd Southbound				Sheldon St Westbound				San Fernando Rd Northbound				Sheldon St Eastbound				
Start Time	Left	Thru	Right	App. Total	Left	Thru	Right	App. Total	Left	Thru	Right	App. Total	Left	Thru	Right	App. Total	Int. Total
Peak Hour Analysis From 10:00 AM to 01:45 PM - Peak 1 of 1																	
Peak Hour for Entire Intersection Begins at 01:00 PM																	
01:00 PM	**2**	4	0	**6**	1	2	**2**	5	**6**	6	3	**15**	**1**	5	**2**	8	34
01:15 PM	1	3	0	4	3	4	1	8	1	6	1	8	0	3	2	5	25
01:30 PM	0	**5**	0	5	**5**	4	0	9	2	**8**	3	13	0	4	2	6	33
01:45 PM	0	0	**2**	2	1	**7**	2	**10**	1	8	**4**	13	0	**9**	1	**10**	**35**
Total Volume	3	12	2	17	10	17	5	32	10	28	11	49	1	21	7	29	127
% App. Total	17.6	70.6	11.8		31.2	53.1	15.6		20.4	57.1	22.4		3.4	72.4	24.1		
PHF	.375	.600	.250	.708	.500	.607	.625	.800	.417	.875	.688	.817	.250	.583	.875	.725	.907

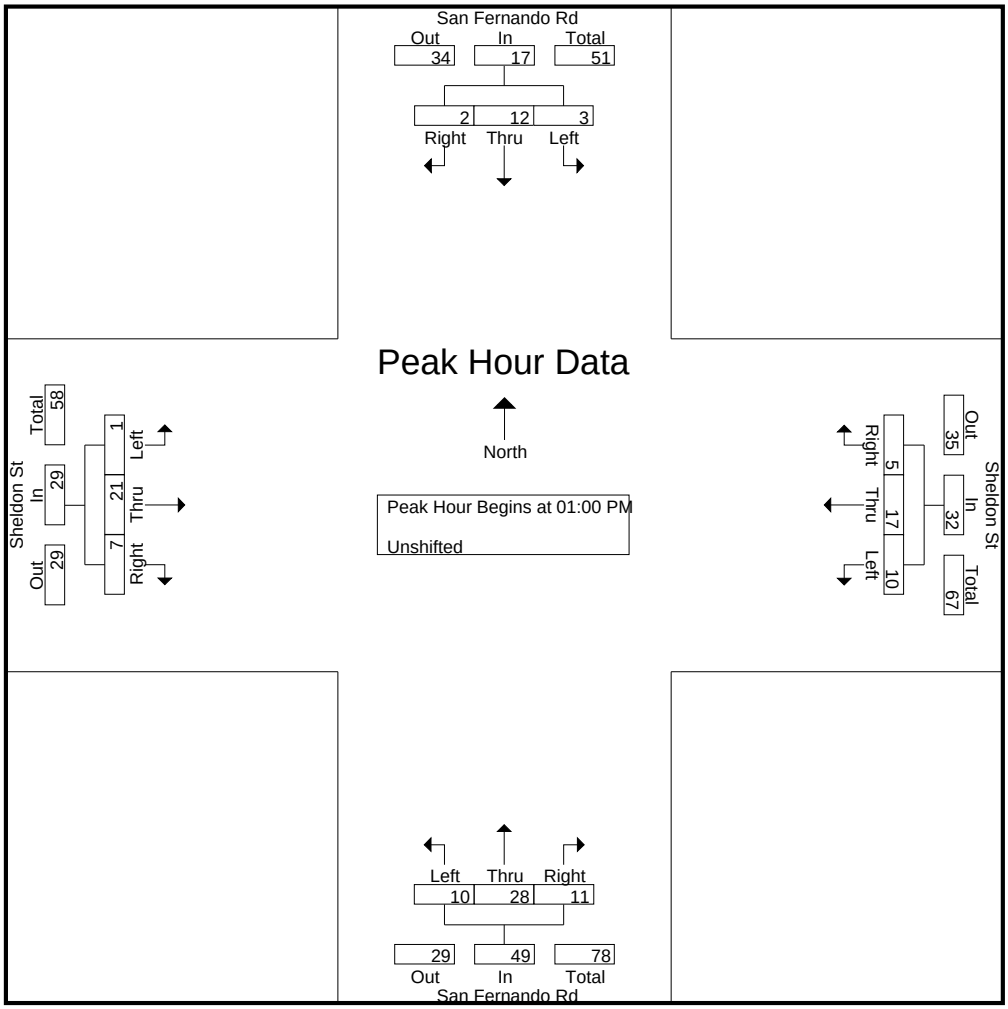

CITY TRAFFIC COUNTERS

626.991.7522

www.ctcounters.com

File Name : SanFSheldon_2Axle
Site Code : 00000000
Start Date : 1/15/2014
Page No : 4

	San Fernando Rd Southbound				Sheldon St Westbound				San Fernando Rd Northbound				Sheldon St Eastbound				
Start Time	Left	Thru	Right	App. Total	Left	Thru	Right	App. Total	Left	Thru	Right	App. Total	Left	Thru	Right	App. Total	Int. Total
Peak Hour Analysis From 02:00 PM to 05:45 PM - Peak 1 of 1																	
Peak Hour for Entire Intersection Begins at 03:00 PM																	
03:00 PM	0	**12**	0	**12**	2	**9**	0	**11**	1	**9**	2	12	0	8	0	8	**43**
03:15 PM	0	7	0	7	**3**	6	0	9	0	4	1	5	0	7	0	7	28
03:30 PM	1	1	**1**	3	1	8	**2**	11	**5**	5	**7**	**17**	**1**	**9**	0	10	41
03:45 PM	**3**	0	0	3	1	4	1	6	1	5	2	8	1	9	**1**	**11**	28
Total Volume	4	20	1	25	7	27	3	37	7	23	12	42	2	33	1	36	140
% App. Total	16	80	4		18.9	73	8.1		16.7	54.8	28.6		5.6	91.7	2.8		
PHF	.333	.417	.250	.521	.583	.750	.375	.841	.350	.639	.429	.618	.500	.917	.250	.818	.814

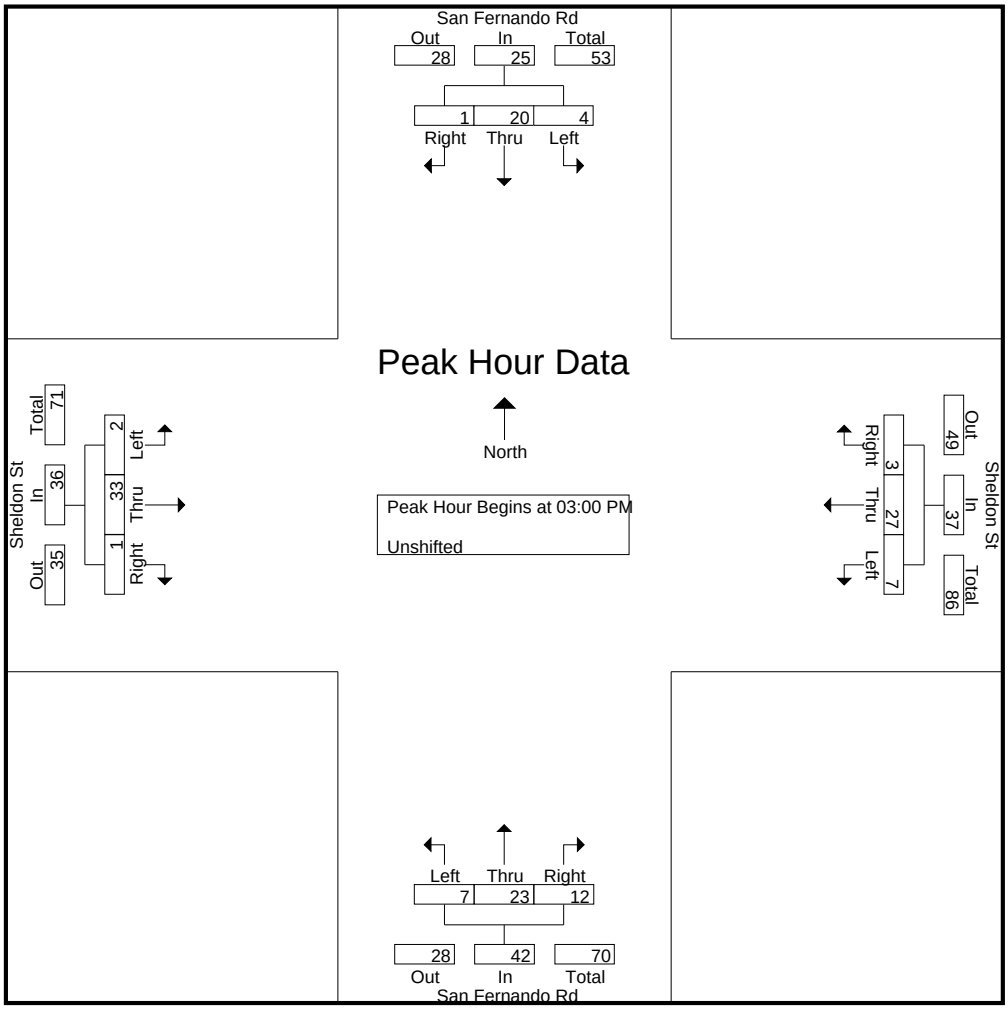

CITY TRAFFIC COUNTERS

626.991.7522

www.ctcounters.com

File Name : SanFSheldon_3Axle
Site Code : 00000000
Start Date : 1/15/2014
Page No : 1

Groups Printed- Bank 2

	San Fernando Rd Southbound			Sheldon St Westbound			San Fernando Rd Northbound			Sheldon St Eastbound			
Start Time	Left	Thru	Right	Left	Thru	Right	Left	Thru	Right	Left	Thru	Right	Int. Total
07:00 AM	1	2	0	1	4	0	0	0	0	0	2	0	10
07:15 AM	0	0	0	0	3	3	0	0	0	0	1	1	8
07:30 AM	1	1	0	0	0	1	0	1	1	0	2	0	7
07:45 AM	0	1	0	0	0	1	0	2	1	0	1	0	6
Total	2	4	0	1	7	5	0	3	2	0	6	1	31
08:00 AM	0	2	0	1	6	2	0	0	0	0	2	0	13
08:15 AM	1	1	0	0	0	3	0	1	1	1	4	0	12
08:30 AM	0	1	0	1	3	2	0	0	0	0	3	0	10
08:45 AM	2	1	0	0	3	2	0	0	2	1	2	0	13
Total	3	5	0	2	12	9	0	1	3	2	11	0	48
09:00 AM	0	5	0	1	6	3	1	0	0	0	5	1	22
09:15 AM	1	3	0	0	5	2	0	0	1	0	3	2	17
09:30 AM	0	3	0	0	8	2	0	0	0	0	3	0	16
09:45 AM	0	0	0	1	6	0	0	1	1	0	4	0	13
Total	1	11	0	2	25	7	1	1	2	0	15	3	68
12:00 PM	0	0	0	1	6	0	0	1	0	0	4	0	12
12:15 PM	0	0	0	1	2	1	0	0	0	0	3	0	7
12:30 PM	0	0	0	0	4	0	0	2	0	0	1	0	7
12:45 PM	0	0	0	2	3	1	0	3	0	0	4	0	13
Total	0	0	0	4	15	2	0	6	0	0	12	0	39
01:00 PM	0	0	0	0	6	0	0	0	0	0	3	0	9
01:15 PM	0	0	0	0	7	1	1	1	0	0	1	0	11
01:30 PM	0	0	0	0	1	3	0	3	0	0	6	0	13
01:45 PM	0	0	0	0	3	0	0	1	0	0	5	0	9
Total	0	0	0	0	17	4	1	5	0	0	15	0	42
03:00 PM	0	0	0	0	4	1	0	1	0	0	3	0	9
03:15 PM	0	1	0	0	5	0	0	2	0	0	3	1	12
03:30 PM	0	0	0	0	0	0	0	3	2	0	3	0	8
03:45 PM	0	3	0	0	1	0	0	2	0	0	1	0	7
Total	0	4	0	0	10	1	0	8	2	0	10	1	36
04:00 PM	0	1	0	1	2	2	0	0	0	0	1	0	7
04:15 PM	0	1	0	0	0	0	0	0	1	0	7	0	9
04:30 PM	0	1	0	2	2	0	0	2	0	0	0	0	7
04:45 PM	0	2	0	0	0	0	0	4	1	0	3	0	10
Total	0	5	0	3	4	2	0	6	2	0	11	0	33
05:00 PM	0	2	0	1	0	0	0	0	1	0	6	0	10
05:15 PM	0	0	0	0	0	0	8	1	0	0	2	0	11
05:30 PM	0	0	0	0	0	0	0	0	2	0	3	0	5
05:45 PM	1	0	0	0	0	0	0	0	0	0	1	0	2
Total	1	2	0	1	0	0	8	1	3	0	12	0	28
Grand Total	7	31	0	13	90	30	10	31	14	2	92	5	325
Apprch %	18.4	81.6	0	9.8	67.7	22.6	18.2	56.4	25.5	2	92.9	5.1	
Total %	2.2	9.5	0	4	27.7	9.2	3.1	9.5	4.3	0.6	28.3	1.5	

CITY TRAFFIC COUNTERS

626.991.7522

www.ctcounters.com

File Name : SanFSheldon_3Axle
Site Code : 00000000
Start Date : 1/15/2014
Page No : 2

	San Fernando Rd Southbound				Sheldon St Westbound				San Fernando Rd Northbound				Sheldon St Eastbound				
Start Time	Left	Thru	Right	App. Total	Left	Thru	Right	App. Total	Left	Thru	Right	App. Total	Left	Thru	Right	App. Total	Int. Total
Peak Hour Analysis From 07:00 AM to 09:45 AM - Peak 1 of 1																	
Peak Hour for Entire Intersection Begins at 08:45 AM																	
08:45 AM	**2**	1	0	3	0	3	2	5	0	0	**2**	**2**	**1**	2	0	3	13
09:00 AM	0	**5**	0	**5**	**1**	6	**3**	**10**	**1**	0	0	1	0	**5**	1	**6**	**22**
09:15 AM	1	3	0	4	0	5	2	7	0	0	1	1	0	3	**2**	5	17
09:30 AM	0	3	0	3	0	**8**	2	10	0	0	0	0	0	3	0	3	16
Total Volume	3	12	0	15	1	22	9	32	1	0	3	4	1	13	3	17	68
% App. Total	20	80	0		3.1	68.8	28.1		25	0	75		5.9	76.5	17.6		
PHF	.375	.600	.000	.750	.250	.688	.750	.800	.250	.000	.375	.500	.250	.650	.375	.708	.773

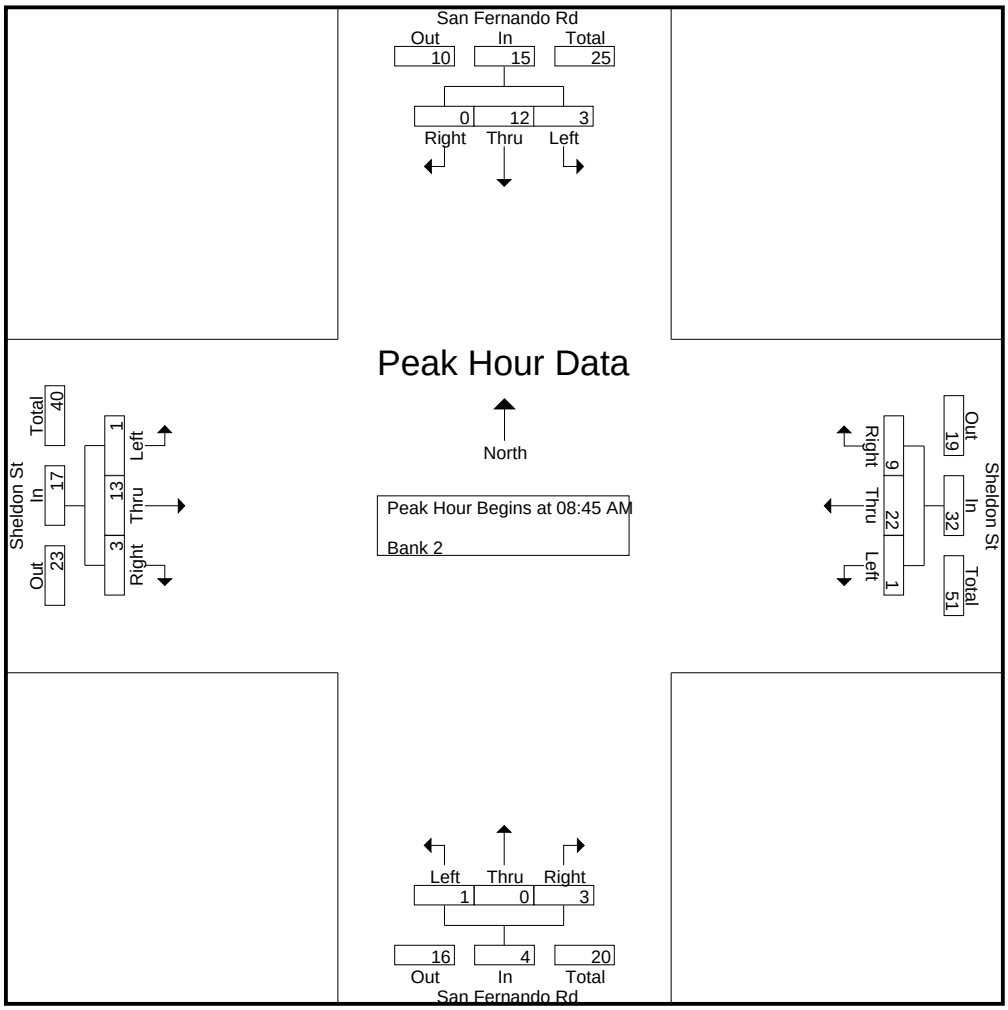

CITY TRAFFIC COUNTERS

626.991.7522

www.ctcounters.com

File Name : SanFSheldon_3Axle
Site Code : 00000000
Start Date : 1/15/2014
Page No : 3

	San Fernando Rd Southbound				Sheldon St Westbound				San Fernando Rd Northbound				Sheldon St Eastbound				
Start Time	Left	Thru	Right	App. Total	Left	Thru	Right	App. Total	Left	Thru	Right	App. Total	Left	Thru	Right	App. Total	Int. Total
Peak Hour Analysis From 10:00 AM to 01:45 PM - Peak 1 of 1																	
Peak Hour for Entire Intersection Begins at 12:45 PM																	
12:45 PM	0	0	0	0	**2**	3	1	6	0	**3**	0	**3**	0	4	0	4	**13**
01:00 PM	0	0	0	0	0	6	0	6	0	0	0	0	0	3	0	3	9
01:15 PM	0	0	0	0	0	**7**	1	**8**	**1**	1	0	2	0	1	0	1	11
01:30 PM	0	0	0	0	0	1	**3**	4	0	3	0	3	0	**6**	0	**6**	13
Total Volume	0	0	0	0	2	17	5	24	1	7	0	8	0	14	0	14	46
% App. Total	0	0	0		8.3	70.8	20.8		12.5	87.5	0		0	100	0		
PHF	.000	.000	.000	.000	.250	.607	.417	.750	.250	.583	.000	.667	.000	.583	.000	.583	.885

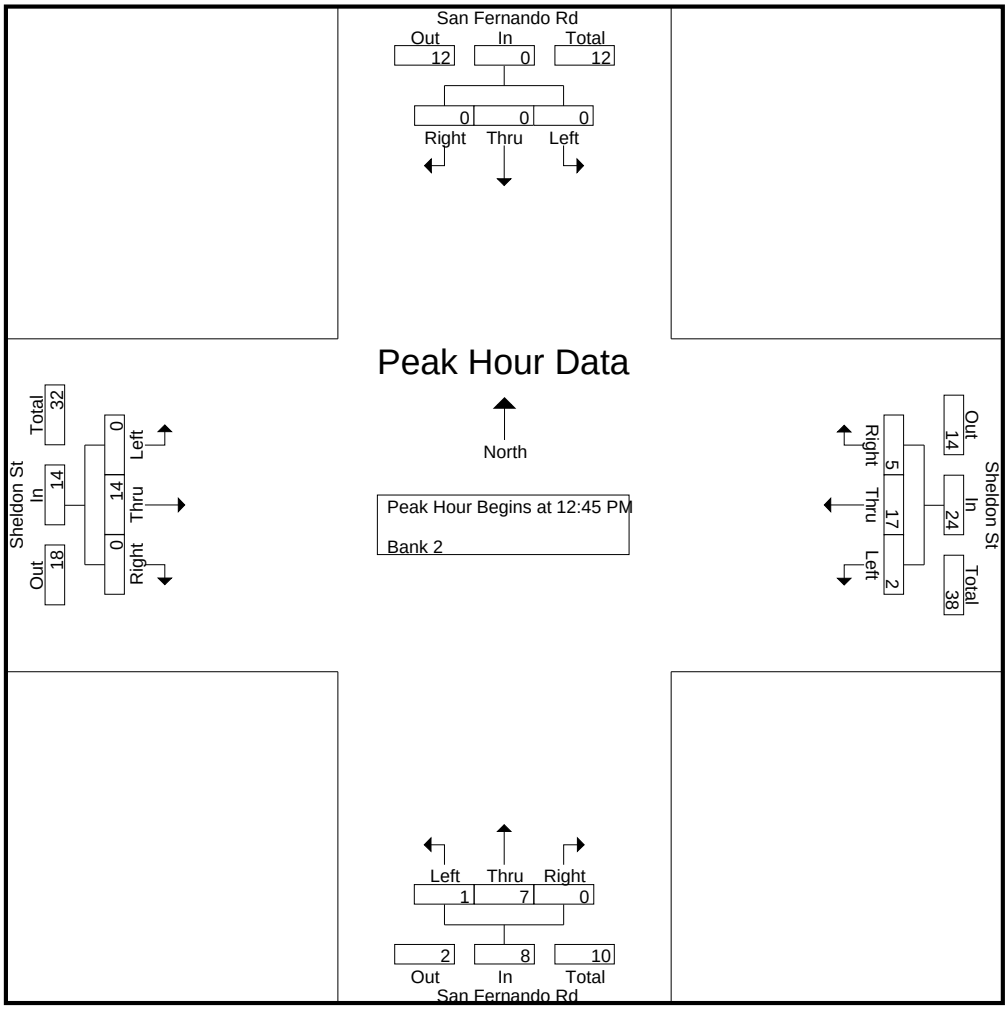

CITY TRAFFIC COUNTERS

626.991.7522

www.ctcounters.com

File Name : SanFSheldon_3Axle
Site Code : 00000000
Start Date : 1/15/2014
Page No : 4

	San Fernando Rd Southbound				Sheldon St Westbound				San Fernando Rd Northbound				Sheldon St Eastbound				
Start Time	Left	Thru	Right	App. Total	Left	Thru	Right	App. Total	Left	Thru	Right	App. Total	Left	Thru	Right	App. Total	Int. Total
Peak Hour Analysis From 02:00 PM to 05:45 PM - Peak 1 of 1																	
Peak Hour for Entire Intersection Begins at 04:30 PM																	
04:30 PM	0	1	0	1	**2**	**2**	0	**4**	0	2	0	2	0	0	0	0	7
04:45 PM	0	**2**	0	**2**	0	0	0	0	0	**4**	**1**	5	0	3	0	3	10
05:00 PM	0	2	0	2	1	0	0	1	0	0	1	1	0	**6**	0	**6**	10
05:15 PM	0	0	0	0	0	0	0	0	**8**	1	0	**9**	0	2	0	2	**11**
Total Volume	0	5	0	5	3	2	0	5	8	7	2	17	0	11	0	11	38
% App. Total	0	100	0		60	40	0		47.1	41.2	11.8		0	100	0		
PHF	.000	.625	.000	.625	.375	.250	.000	.313	.250	.438	.500	.472	.000	.458	.000	.458	.864

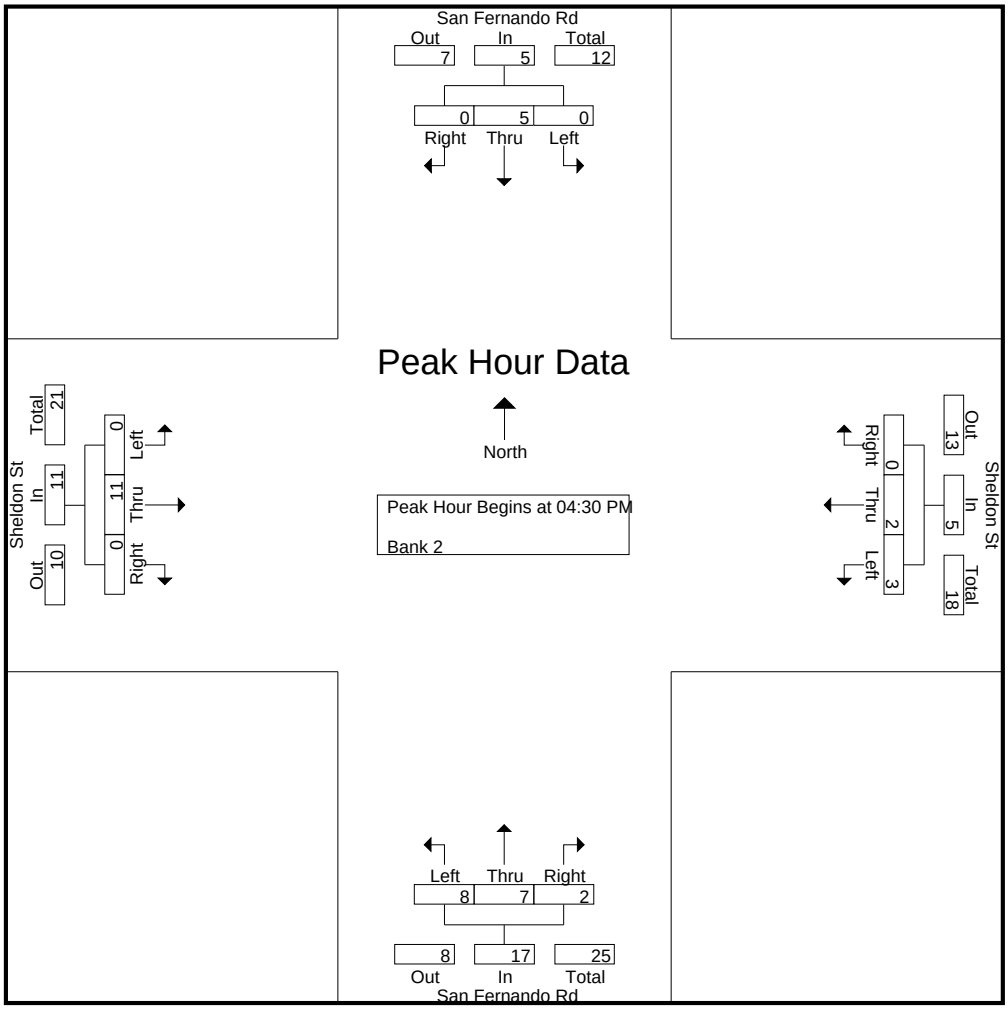

CITY TRAFFIC COUNTERS

626.991.7522

www.ctcounters.com

File Name : SanFSheldon_4Axle
Site Code : 00000000
Start Date : 1/15/2014
Page No : 1

Groups Printed- Bank 2

	San Fernando Rd Southbound			Sheldon St Westbound			San Fernando Rd Northbound			Sheldon St Eastbound			
Start Time	Left	Thru	Right	Left	Thru	Right	Left	Thru	Right	Left	Thru	Right	Int. Total
07:00 AM	0	1	0	0	0	0	0	0	0	0	0	0	1
07:15 AM	0	1	0	0	0	0	0	0	0	0	0	0	1
Total	0	2	0	0	0	0	0	0	0	0	0	0	2
08:00 AM	0	1	0	0	0	0	0	0	1	0	2	0	4
08:15 AM	1	0	1	0	0	0	0	0	0	0	1	0	3
08:30 AM	0	0	0	1	1	0	0	0	1	0	0	0	3
08:45 AM	0	0	0	0	1	1	0	0	0	0	0	1	3
Total	1	1	1	1	2	1	0	0	2	0	3	1	13
09:00 AM	0	1	0	0	0	0	0	0	0	0	1	0	2
09:15 AM	0	1	0	0	0	0	0	0	0	0	1	0	2
09:30 AM	0	1	0	0	0	0	0	0	0	0	1	0	2
09:45 AM	0	0	0	0	1	1	0	0	2	0	1	0	5
Total	0	3	0	0	1	1	0	0	2	0	4	0	11
12:00 PM	0	0	0	0	0	0	0	1	0	0	0	0	1
12:30 PM	0	0	0	0	0	0	0	0	0	0	1	0	1
12:45 PM	0	0	0	0	0	0	0	0	1	0	2	0	3
Total	0	0	0	0	0	0	0	1	1	0	3	0	5
01:00 PM	1	0	0	0	1	1	0	0	3	0	1	0	7
01:15 PM	0	1	0	0	0	0	0	1	0	0	0	0	2
01:30 PM	0	0	0	0	0	0	0	0	1	0	2	1	4
01:45 PM	0	0	0	0	0	1	0	1	0	0	0	0	2
Total	1	1	0	0	1	2	0	2	4	0	3	1	15
03:00 PM	0	0	0	0	0	0	0	0	1	2	0	0	3
03:15 PM	0	0	0	0	0	0	0	0	0	0	0	1	1
03:45 PM	1	0	0	0	1	1	0	0	0	0	0	0	3
Total	1	0	0	0	1	1	0	0	1	2	0	1	7
05:00 PM	0	0	0	0	0	1	0	0	0	0	0	0	1
05:15 PM	0	0	0	0	0	0	0	1	0	0	1	0	2
05:30 PM	0	1	0	0	0	0	0	0	1	2	0	0	4
05:45 PM	0	0	0	0	0	0	0	0	0	0	1	0	1
Total	0	1	0	0	0	1	0	1	1	2	2	0	8
Grand Total	3	8	1	1	5	6	0	4	11	4	15	3	61
Apprch %	25	66.7	8.3	8.3	41.7	50	0	26.7	73.3	18.2	68.2	13.6	
Total %	4.9	13.1	1.6	1.6	8.2	9.8	0	6.6	18	6.6	24.6	4.9	

CITY TRAFFIC COUNTERS

626.991.7522

www.ctcounters.com

File Name : SanFSheldon_4Axle
Site Code : 00000000
Start Date : 1/15/2014
Page No : 2

	San Fernando Rd Southbound				Sheldon St Westbound				San Fernando Rd Northbound				Sheldon St Eastbound				
Start Time	Left	Thru	Right	App. Total	Left	Thru	Right	App. Total	Left	Thru	Right	App. Total	Left	Thru	Right	App. Total	Int. Total
Peak Hour Analysis From 07:00 AM to 09:45 AM - Peak 1 of 1																	
Peak Hour for Entire Intersection Begins at 08:00 AM																	
08:00 AM	0	**1**	0	1	0	0	0	0	0	0	**1**	**1**	0	**2**	0	**2**	**4**
08:15 AM	**1**	0	**1**	**2**	0	0	0	0	0	0	0	0	0	1	0	1	3
08:30 AM	0	0	0	0	**1**	**1**	0	**2**	0	0	1	1	0	0	0	0	3
08:45 AM	0	0	0	0	0	1	**1**	2	0	0	0	0	0	0	**1**	1	3
Total Volume	1	1	1	3	1	2	1	4	0	0	2	2	0	3	1	4	13
% App. Total	33.3	33.3	33.3		25	50	25		0	0	100		0	75	25		
PHF	.250	.250	.250	.375	.250	.500	.250	.500	.000	.000	.500	.500	.000	.375	.250	.500	.813

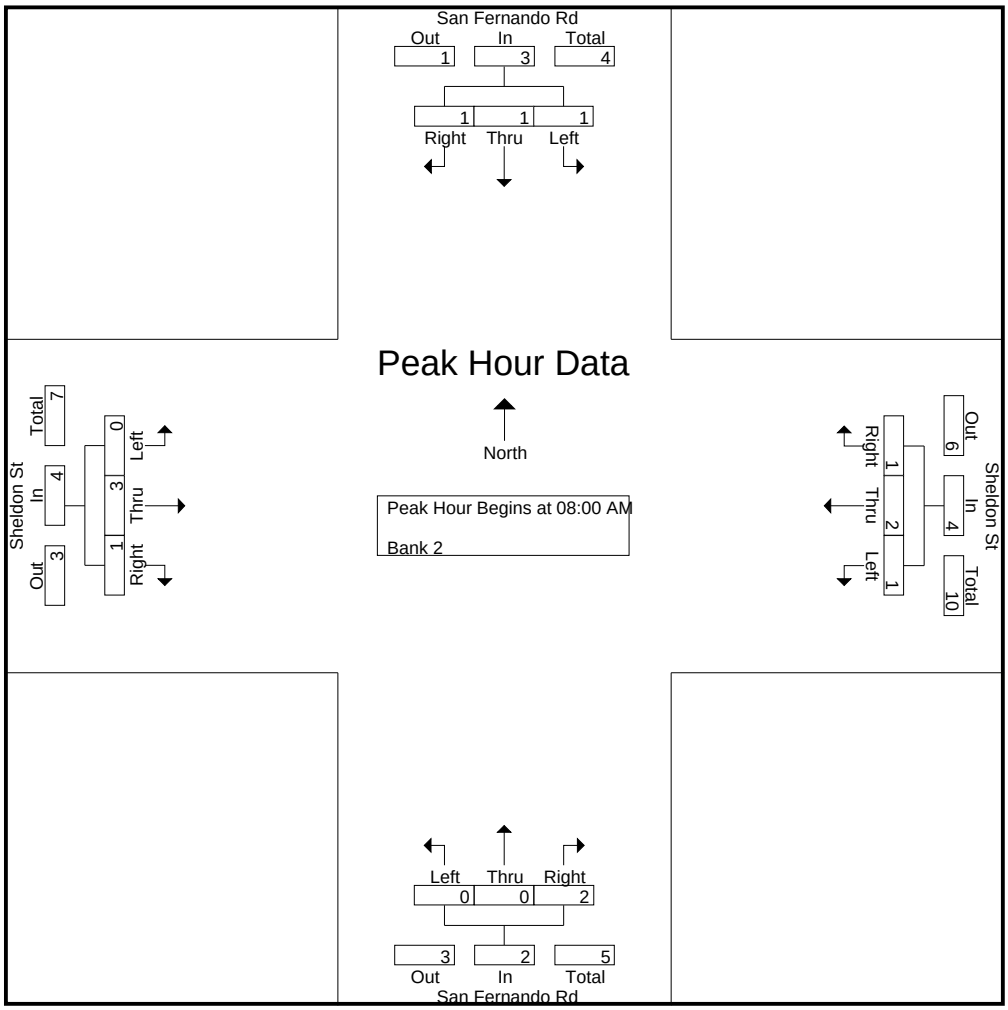

CITY TRAFFIC COUNTERS

626.991.7522

www.ctcounters.com

File Name : SanFSheldon_4Axle
Site Code : 00000000
Start Date : 1/15/2014
Page No : 3

	San Fernando Rd Southbound				Sheldon St Westbound				San Fernando Rd Northbound				Sheldon St Eastbound				
Start Time	Left	Thru	Right	App. Total	Left	Thru	Right	App. Total	Left	Thru	Right	App. Total	Left	Thru	Right	App. Total	Int. Total
Peak Hour Analysis From 10:00 AM to 01:45 PM - Peak 1 of 1																	
Peak Hour for Entire Intersection Begins at 12:45 PM																	
12:45 PM	0	0	0	0	0	0	0	0	0	0	1	1	0	**2**	0	2	3
01:00 PM	**1**	0	0	**1**	0	**1**	**1**	**2**	0	0	**3**	**3**	0	1	0	1	**7**
01:15 PM	0	**1**	0	1	0	0	0	0	0	**1**	0	1	0	0	0	0	2
01:30 PM	0	0	0	0	0	0	0	0	0	0	1	1	0	2	**1**	**3**	4
Total Volume	1	1	0	2	0	1	1	2	0	1	5	6	0	5	1	6	16
% App. Total	50	50	0		0	50	50		0	16.7	83.3		0	83.3	16.7		
PHF	.250	.250	.000	.500	.000	.250	.250	.250	.000	.250	.417	.500	.000	.625	.250	.500	.571

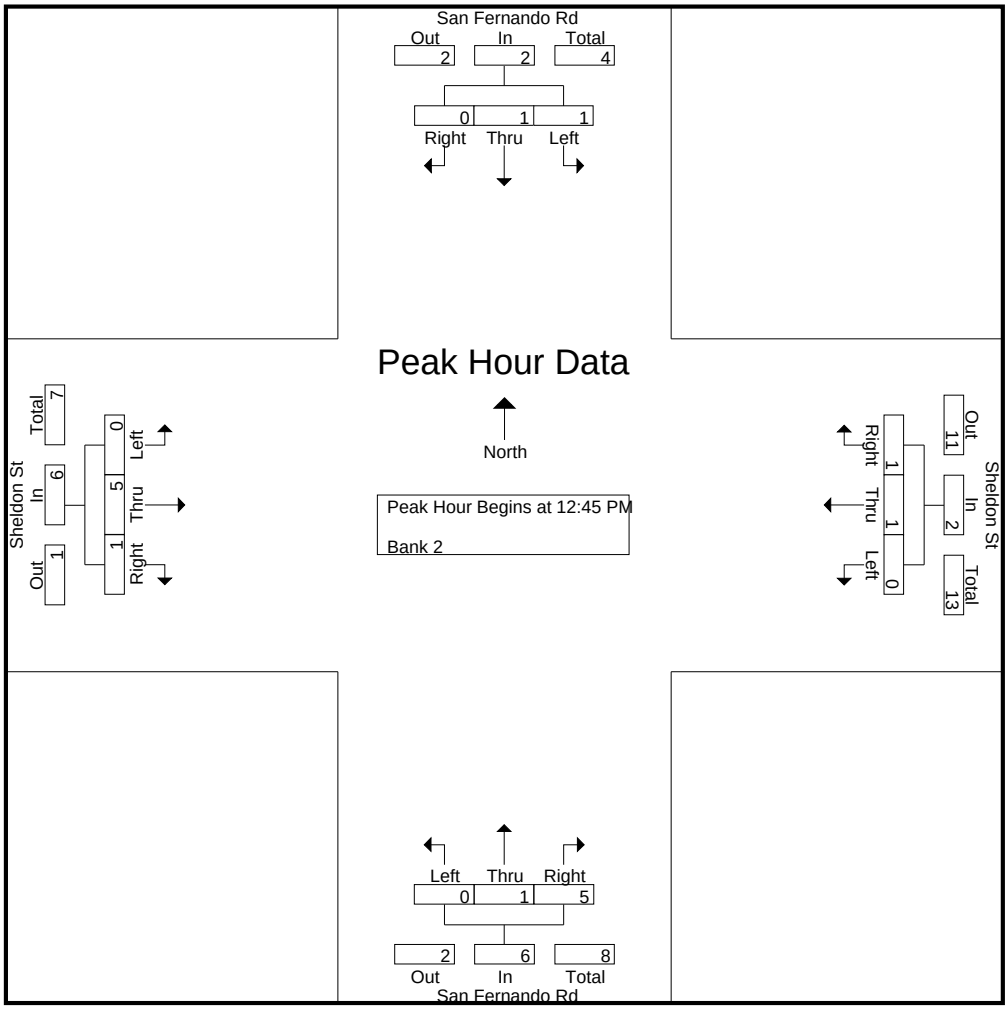

CITY TRAFFIC COUNTERS

626.991.7522

www.ctcounters.com

File Name : SanFSheldon_4Axle
Site Code : 00000000
Start Date : 1/15/2014
Page No : 4

	San Fernando Rd Southbound				Sheldon St Westbound				San Fernando Rd Northbound				Sheldon St Eastbound				
Start Time	Left	Thru	Right	App. Total	Left	Thru	Right	App. Total	Left	Thru	Right	App. Total	Left	Thru	Right	App. Total	Int. Total
Peak Hour Analysis From 02:00 PM to 05:45 PM - Peak 1 of 1																	
Peak Hour for Entire Intersection Begins at 05:00 PM																	
05:00 PM	0	0	0	0	0	0	**1**	**1**	0	0	0	0	0	0	0	0	1
05:15 PM	0	0	0	0	0	0	0	0	0	**1**	0	**1**	0	**1**	0	1	2
05:30 PM	0	**1**	0	**1**	0	0	0	0	0	0	**1**	1	**2**	0	0	**2**	**4**
05:45 PM	0	0	0	0	0	0	0	0	0	0	0	0	0	1	0	1	1
Total Volume	0	1	0	1	0	0	1	1	0	1	1	2	2	2	0	4	8
% App. Total	0	100	0		0	0	100		0	50	50		50	50	0		
PHF	.000	.250	.000	.250	.000	.000	.250	.250	.000	.250	.250	.500	.250	.500	.000	.500	.500

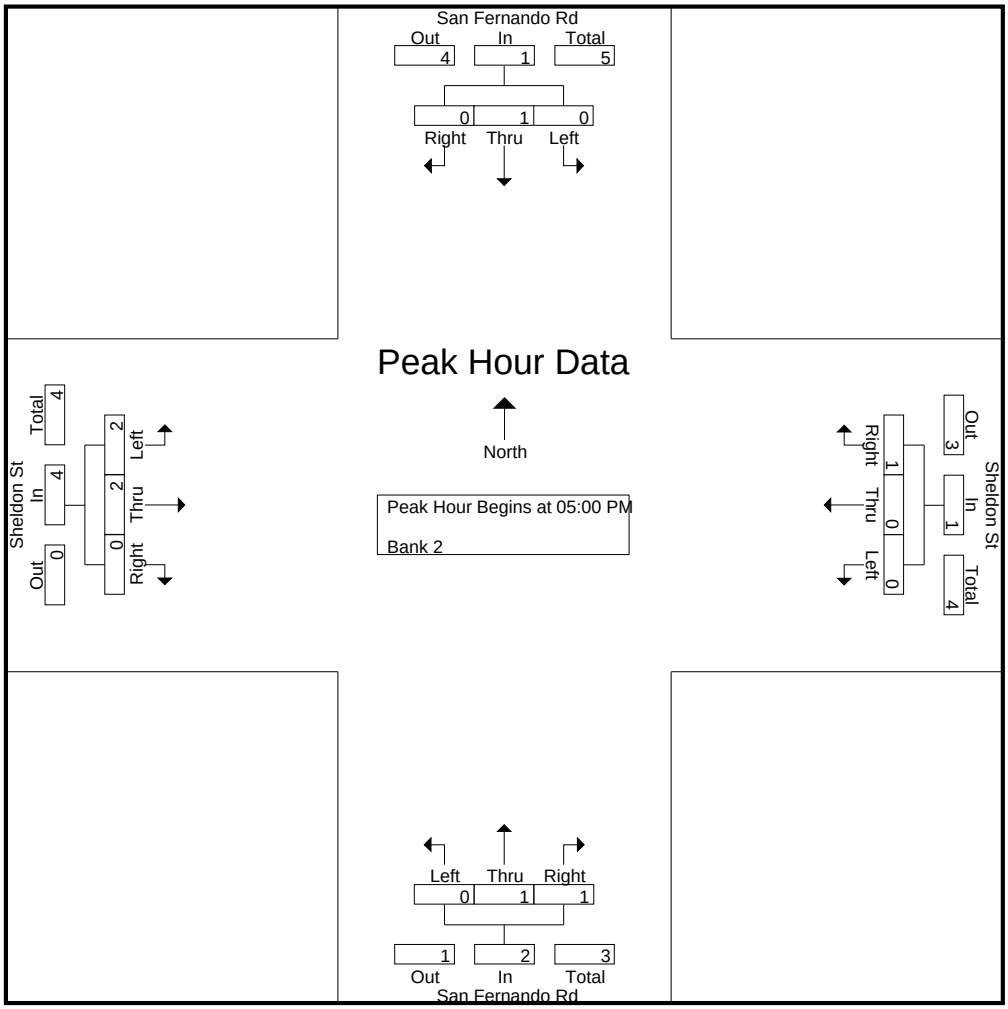

CITY TRAFFIC COUNTERS

626.991.7522

www.ctcounters.com

File Name : SanFSheldon_5Axle
Site Code : 00000000
Start Date : 1/15/2014
Page No : 1

Groups Printed- Bank 1

	San Fernando Rd Southbound			Sheldon St Westbound			San Fernando Rd Northbound			Sheldon St Eastbound			
Start Time	Left	Thru	Right	Left	Thru	Right	Left	Thru	Right	Left	Thru	Right	Int. Total
07:00 AM	0	3	1	0	2	0	0	0	0	0	2	0	8
07:15 AM	1	4	0	1	2	0	2	0	0	0	2	0	12
07:30 AM	1	1	0	2	1	0	0	1	2	0	0	0	8
07:45 AM	0	6	0	0	2	0	0	2	1	0	0	1	12
Total	2	14	1	3	7	0	2	3	3	0	4	1	40
08:00 AM	0	1	0	0	2	0	0	0	3	0	5	0	11
08:15 AM	1	1	0	0	1	0	0	1	1	0	1	0	6
08:30 AM	1	4	0	0	2	0	0	0	0	0	0	0	7
08:45 AM	0	3	0	1	1	0	0	1	1	0	5	0	12
Total	2	9	0	1	6	0	0	2	5	0	11	0	36
09:00 AM	1	5	0	4	3	0	0	1	0	0	3	0	17
09:15 AM	0	2	0	2	3	0	0	3	0	0	2	0	12
09:30 AM	0	0	0	0	3	0	0	0	2	0	3	0	8
09:45 AM	0	0	0	2	3	0	0	0	1	0	1	0	7
Total	1	7	0	8	12	0	0	4	3	0	9	0	44
12:00 PM	0	2	0	0	5	0	0	2	0	0	1	1	11
12:15 PM	0	3	0	1	2	0	0	2	1	1	2	0	12
12:30 PM	0	0	0	3	1	0	0	0	1	0	4	0	9
12:45 PM	0	0	0	0	2	0	0	0	0	0	1	0	3
Total	0	5	0	4	10	0	0	4	2	1	8	1	35
01:00 PM	0	1	0	0	0	1	0	0	2	1	1	0	6
01:15 PM	0	1	0	1	1	0	0	1	0	0	1	1	6
01:30 PM	0	0	0	2	0	0	0	0	0	0	1	0	3
01:45 PM	0	0	1	0	2	0	0	2	0	0	2	0	7
Total	0	2	1	3	3	1	0	3	2	1	5	1	22
03:00 PM	0	1	0	0	1	0	2	7	2	0	1	0	14
03:15 PM	0	0	0	0	1	0	0	0	1	0	3	0	5
03:30 PM	0	1	0	1	2	0	0	0	0	1	0	1	6
03:45 PM	0	1	0	0	0	0	0	1	0	0	0	0	2
Total	0	3	0	1	4	0	2	8	3	1	4	1	27
04:00 PM	0	0	0	1	0	0	0	1	0	0	2	0	4
04:15 PM	0	1	0	1	0	0	0	1	0	0	0	0	3
04:30 PM	0	1	0	0	1	0	4	1	1	0	0	0	8
Total	0	2	0	2	1	0	4	3	1	0	2	0	15
05:15 PM	0	0	0	0	0	0	0	1	0	0	0	0	1
05:30 PM	0	0	0	0	0	0	0	0	0	1	1	0	2
Total	0	0	0	0	0	0	0	1	0	1	1	0	3
Grand Total	5	42	2	22	43	1	8	28	19	4	44	4	222
Apprch %	10.2	85.7	4.1	33.3	65.2	1.5	14.5	50.9	34.5	7.7	84.6	7.7	
Total %	2.3	18.9	0.9	9.9	19.4	0.5	3.6	12.6	8.6	1.8	19.8	1.8	

CITY TRAFFIC COUNTERS

626.991.7522

www.ctcounters.com

File Name : SanFSheldon_5Axle
Site Code : 00000000
Start Date : 1/15/2014
Page No : 2

	San Fernando Rd Southbound				Sheldon St Westbound				San Fernando Rd Northbound				Sheldon St Eastbound				
Start Time	Left	Thru	Right	App. Total	Left	Thru	Right	App. Total	Left	Thru	Right	App. Total	Left	Thru	Right	App. Total	Int. Total
Peak Hour Analysis From 07:00 AM to 09:45 AM - Peak 1 of 1																	
Peak Hour for Entire Intersection Begins at 08:45 AM																	
08:45 AM	0	3	0	3	1	1	0	2	0	1	1	2	0	**5**	0	**5**	12
09:00 AM	**1**	**5**	0	**6**	**4**	**3**	0	**7**	0	1	0	1	0	3	0	3	**17**
09:15 AM	0	2	0	2	2	3	0	5	0	**3**	0	**3**	0	2	0	2	12
09:30 AM	0	0	0	0	0	3	0	3	0	0	**2**	2	0	3	0	3	8
Total Volume	1	10	0	11	7	10	0	17	0	5	3	8	0	13	0	13	49
% App. Total	9.1	90.9	0		41.2	58.8	0		0	62.5	37.5		0	100	0		
PHF	.250	.500	.000	.458	.438	.833	.000	.607	.000	.417	.375	.667	.000	.650	.000	.650	.721

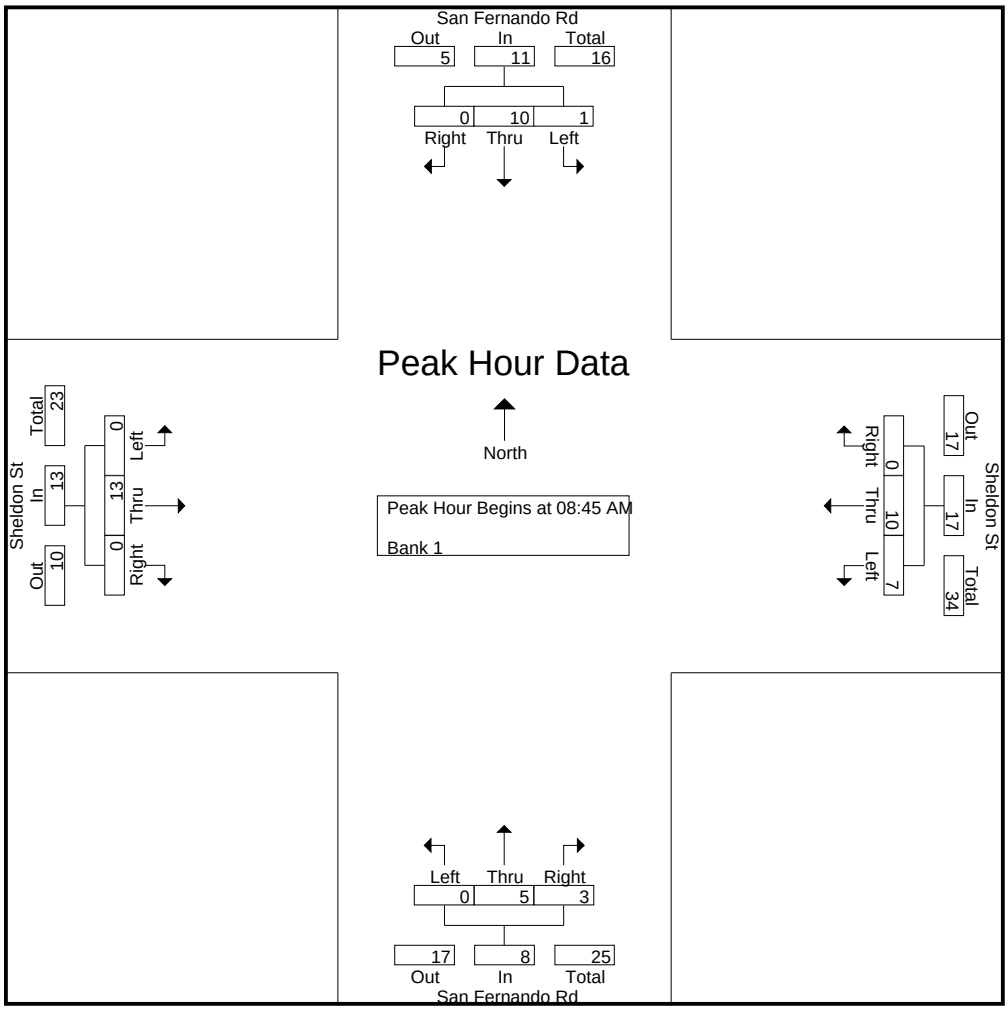

CITY TRAFFIC COUNTERS

626.991.7522

www.ctcounters.com

File Name : SanFSheldon_5Axle
Site Code : 00000000
Start Date : 1/15/2014
Page No : 3

	San Fernando Rd Southbound				Sheldon St Westbound				San Fernando Rd Northbound				Sheldon St Eastbound				
Start Time	Left	Thru	Right	App. Total	Left	Thru	Right	App. Total	Left	Thru	Right	App. Total	Left	Thru	Right	App. Total	Int. Total
Peak Hour Analysis From 10:00 AM to 01:45 PM - Peak 1 of 1																	
Peak Hour for Entire Intersection Begins at 12:00 PM																	
12:00 PM	0	2	0	2	0	**5**	0	**5**	0	**2**	0	2	0	1	**1**	2	11
12:15 PM	0	**3**	0	**3**	1	2	0	3	0	2	**1**	**3**	**1**	2	0	3	**12**
12:30 PM	0	0	0	0	**3**	1	0	4	0	0	1	1	0	**4**	0	**4**	9
12:45 PM	0	0	0	0	0	2	0	2	0	0	0	0	0	1	0	1	3
Total Volume	0	5	0	5	4	10	0	14	0	4	2	6	1	8	1	10	35
% App. Total	0	100	0		28.6	71.4	0		0	66.7	33.3		10	80	10		
PHF	.000	.417	.000	.417	.333	.500	.000	.700	.000	.500	.500	.500	.250	.500	.250	.625	.729

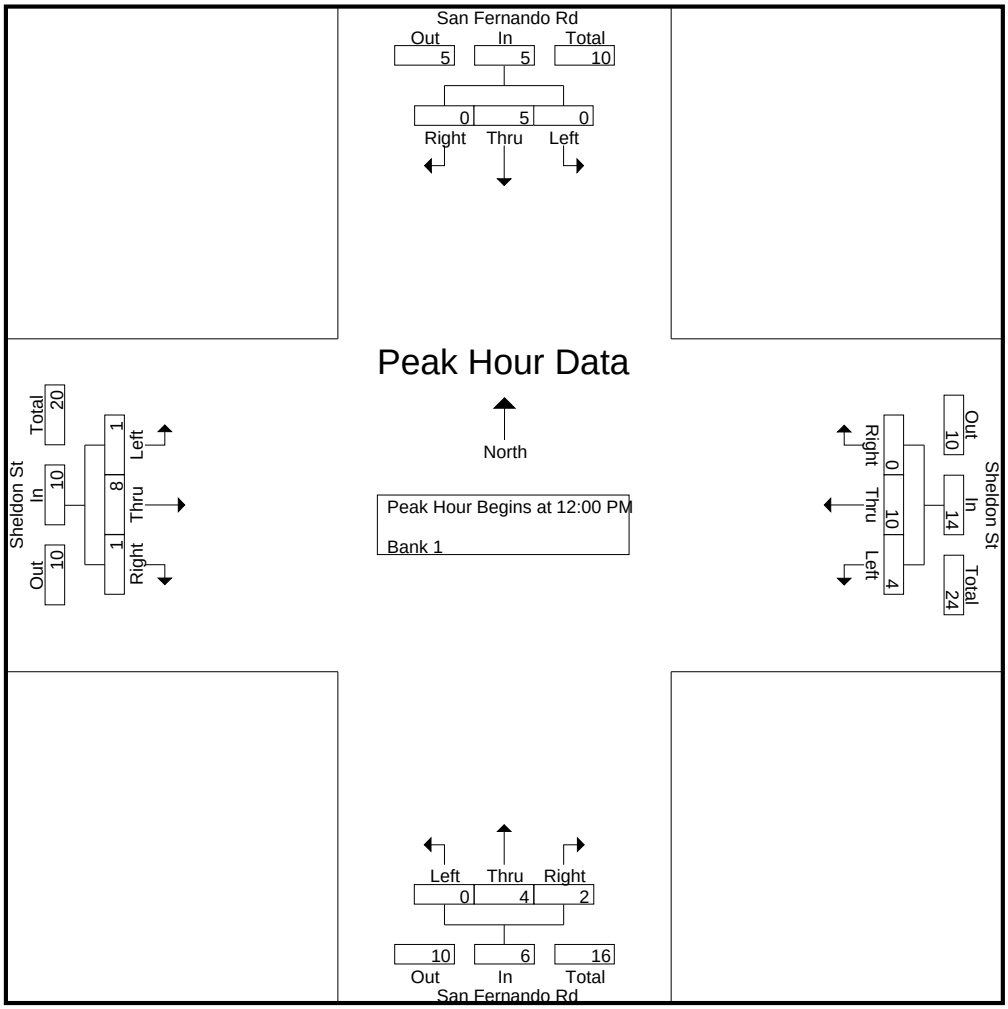

CITY TRAFFIC COUNTERS

626.991.7522

www.ctcounters.com

File Name : SanFSheldon_5Axle
Site Code : 00000000
Start Date : 1/15/2014
Page No : 4

	San Fernando Rd Southbound				Sheldon St Westbound				San Fernando Rd Northbound				Sheldon St Eastbound				
Start Time	Left	Thru	Right	App. Total	Left	Thru	Right	App. Total	Left	Thru	Right	App. Total	Left	Thru	Right	App. Total	Int. Total
Peak Hour Analysis From 02:00 PM to 05:45 PM - Peak 1 of 1																	
Peak Hour for Entire Intersection Begins at 03:00 PM																	
03:00 PM	0	**1**	0	**1**	0	1	0	1	**2**	**7**	**2**	**11**	0	1	0	1	**14**
03:15 PM	0	0	0	0	0	1	0	1	0	0	1	1	0	**3**	0	**3**	5
03:30 PM	0	1	0	1	**1**	**2**	0	**3**	0	0	0	0	**1**	0	**1**	2	6
03:45 PM	0	1	0	1	0	0	0	0	0	1	0	1	0	0	0	0	2
Total Volume	0	3	0	3	1	4	0	5	2	8	3	13	1	4	1	6	27
% App. Total	0	100	0		20	80	0		15.4	61.5	23.1		16.7	66.7	16.7		
PHF	.000	.750	.000	.750	.250	.500	.000	.417	.250	.286	.375	.295	.250	.333	.250	.500	.482

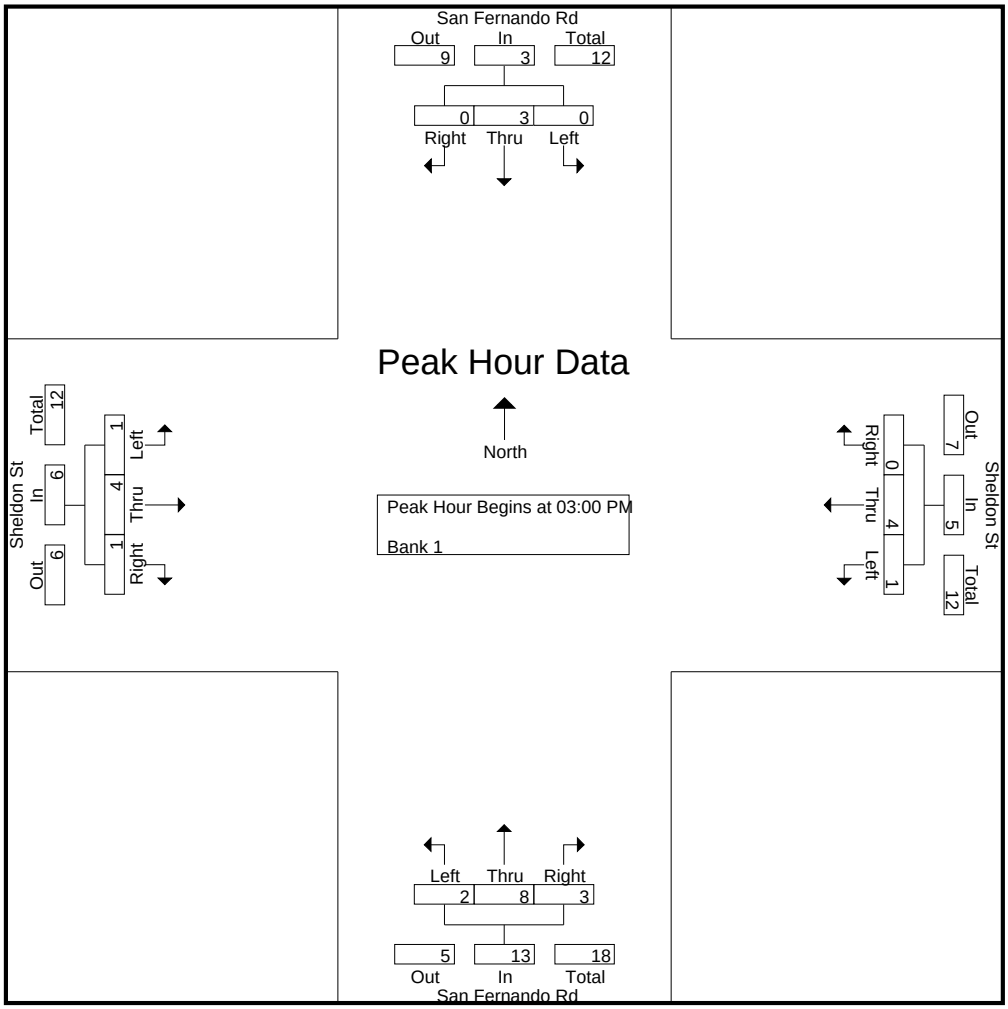

CITY TRAFFIC COUNTERS

626.991.7522

www.ctcounters.com

File Name : GlenOaksSheldon
Site Code : 00000000
Start Date : 1/15/2014
Page No : 1

Groups Printed- Unshifted

	Glenoaks Blvd Southbound			Sheldon St Westbound			Glenoaks Blvd Northbound			Sheldon St Eastbound			
Start Time	Left	Thru	Right	Left	Thru	Right	Left	Thru	Right	Left	Thru	Right	Int. Total
07:00 AM	10	187	50	12	90	8	6	52	2	22	34	10	483
07:15 AM	13	212	65	19	92	9	7	71	5	25	34	14	566
07:30 AM	11	242	84	32	106	10	16	82	4	36	63	16	702
07:45 AM	19	262	71	24	105	14	13	83	7	35	69	24	726
Total	53	903	270	87	393	41	42	288	18	118	200	64	2477
08:00 AM	17	197	60	10	109	24	18	78	10	42	32	18	615
08:15 AM	17	252	40	9	92	7	13	74	8	29	28	24	593
08:30 AM	11	191	32	16	61	8	9	53	6	20	19	24	450
08:45 AM	14	137	20	11	61	6	4	49	6	22	34	30	394
Total	59	777	152	46	323	45	44	254	30	113	113	96	2052
09:00 AM	5	123	22	5	44	4	7	47	2	18	19	21	317
09:15 AM	9	105	42	4	46	6	12	59	4	31	29	18	365
09:30 AM	9	88	15	14	48	11	9	41	5	24	28	22	314
09:45 AM	6	95	34	7	34	10	11	68	9	15	31	15	335
Total	29	411	113	30	172	31	39	215	20	88	107	76	1331
12:00 PM	9	90	40	11	47	13	18	92	6	27	32	31	416
12:15 PM	19	106	27	8	34	6	9	84	6	30	34	18	381
12:30 PM	10	86	34	7	28	13	8	74	11	39	48	27	385
12:45 PM	22	98	31	7	36	15	16	88	6	33	36	13	401
Total	60	380	132	33	145	47	51	338	29	129	150	89	1583
01:00 PM	12	76	20	12	31	16	17	77	7	34	41	26	369
01:15 PM	13	85	38	6	41	13	19	57	12	29	43	19	375
01:30 PM	12	82	40	9	28	5	16	88	12	19	41	22	374
01:45 PM	18	76	23	10	24	4	16	81	10	25	45	26	358
Total	55	319	121	37	124	38	68	303	41	107	170	93	1476
03:00 PM	15	107	31	6	41	8	14	110	8	55	72	20	487
03:15 PM	12	107	38	7	37	9	15	131	11	45	56	23	491
03:30 PM	24	145	53	6	37	9	22	175	12	60	81	31	655
03:45 PM	14	115	43	7	36	6	12	144	10	65	73	11	536
Total	65	474	165	26	151	32	63	560	41	225	282	85	2169
04:00 PM	17	127	22	7	31	12	22	125	13	65	81	24	546
04:15 PM	28	115	32	13	40	14	14	128	13	49	62	20	528
04:30 PM	26	148	34	11	33	18	31	141	13	66	92	23	636
04:45 PM	13	131	45	7	51	9	23	188	6	66	102	18	659
Total	84	521	133	38	155	53	90	582	45	246	337	85	2369
05:00 PM	24	175	39	12	51	14	32	194	5	51	84	27	708
05:15 PM	28	113	29	5	46	19	19	164	16	54	92	25	610
05:30 PM	22	107	26	8	47	11	22	138	12	65	83	16	557
05:45 PM	20	90	24	13	38	10	18	190	21	50	83	13	570
Total	94	485	118	38	182	54	91	686	54	220	342	81	2445
Grand Total	499	4270	1204	335	1645	341	488	3226	278	1246	1701	669	15902
Apprch %	8.4	71.5	20.2	14.4	70.9	14.7	12.2	80.8	7	34.5	47	18.5	
Total %	3.1	26.9	7.6	2.1	10.3	2.1	3.1	20.3	1.7	7.8	10.7	4.2	

CITY TRAFFIC COUNTERS

626.991.7522

www.ctcounters.com

File Name : GlenOaksSheldon
Site Code : 00000000
Start Date : 1/15/2014
Page No : 2

	Glenoaks Blvd Southbound				Sheldon St Westbound				Glenoaks Blvd Northbound				Sheldon St Eastbound				
Start Time	Left	Thru	Right	App. Total	Left	Thru	Right	App. Total	Left	Thru	Right	App. Total	Left	Thru	Right	App. Total	Int. Total
Peak Hour Analysis From 07:00 AM to 09:45 AM - Peak 1 of 1																	
Peak Hour for Entire Intersection Begins at 07:30 AM																	
07:30 AM	11	242	**84**	337	**32**	106	10	**148**	16	82	4	102	36	63	16	115	702
07:45 AM	**19**	**262**	71	**352**	24	105	14	143	13	**83**	7	103	35	**69**	**24**	**128**	**726**
08:00 AM	17	197	60	274	10	**109**	**24**	143	**18**	78	**10**	**106**	**42**	32	18	92	615
08:15 AM	17	252	40	309	9	92	7	108	13	74	8	95	29	28	24	81	593
Total Volume	64	953	255	1272	75	412	55	542	60	317	29	406	142	192	82	416	2636
% App. Total	5	74.9	20		13.8	76	10.1		14.8	78.1	7.1		34.1	46.2	19.7		
PHF	.842	.909	.759	.903	.586	.945	.573	.916	.833	.955	.725	.958	.845	.696	.854	.813	.908

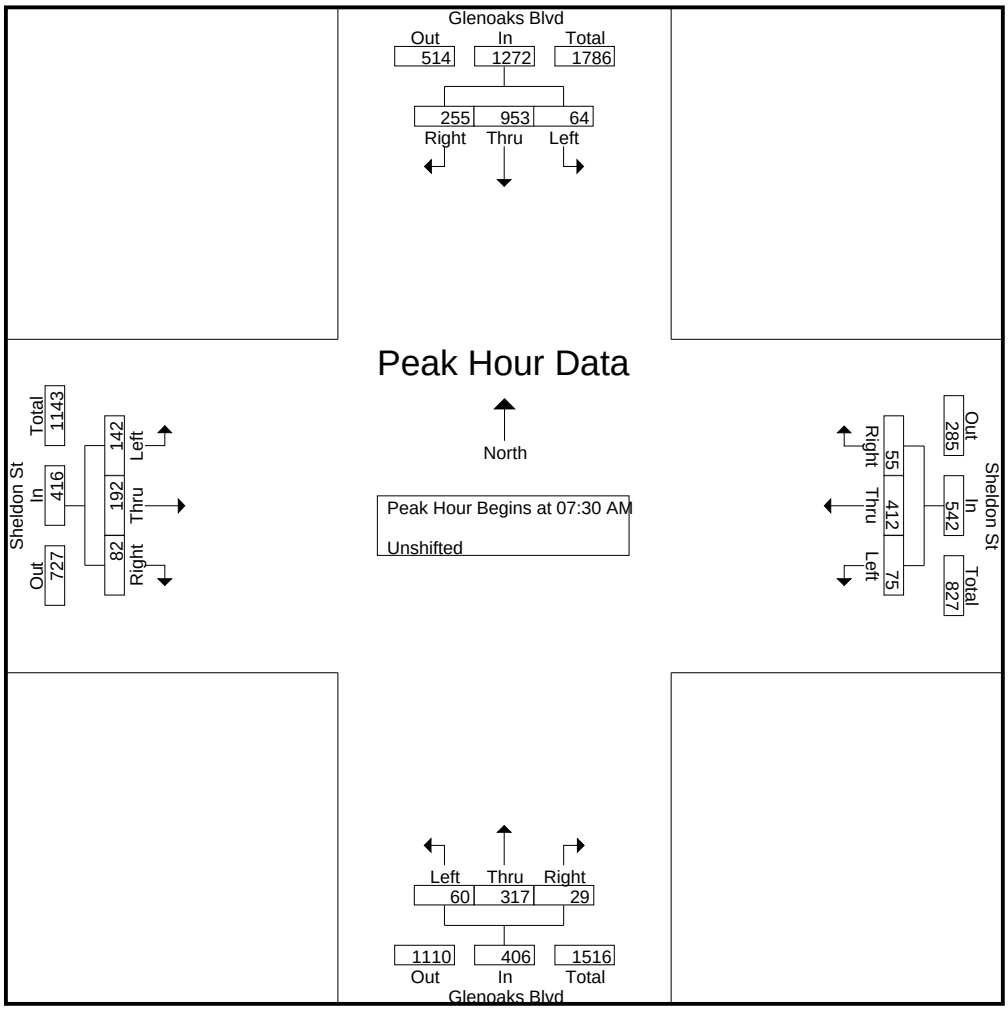

CITY TRAFFIC COUNTERS

626.991.7522

www.ctcounters.com

File Name : GlenOaksSheldon
Site Code : 00000000
Start Date : 1/15/2014
Page No : 3

	Glenoaks Blvd Southbound				Sheldon St Westbound				Glenoaks Blvd Northbound				Sheldon St Eastbound				
Start Time	Left	Thru	Right	App. Total	Left	Thru	Right	App. Total	Left	Thru	Right	App. Total	Left	Thru	Right	App. Total	Int. Total
Peak Hour Analysis From 10:00 AM to 01:45 PM - Peak 1 of 1																	
Peak Hour for Entire Intersection Begins at 12:00 PM																	
12:00 PM	9	90	**40**	139	**11**	**47**	13	**71**	**18**	**92**	6	**116**	27	32	**31**	90	**416**
12:15 PM	19	**106**	27	**152**	8	34	6	48	9	84	6	99	30	34	18	82	381
12:30 PM	10	86	34	130	7	28	13	48	8	74	**11**	93	**39**	**48**	27	**114**	385
12:45 PM	**22**	98	31	151	7	36	**15**	58	16	88	6	110	33	36	13	82	401
Total Volume	60	380	132	572	33	145	47	225	51	338	29	418	129	150	89	368	1583
% App. Total	10.5	66.4	23.1		14.7	64.4	20.9		12.2	80.9	6.9		35.1	40.8	24.2		
PHF	.682	.896	.825	.941	.750	.771	.783	.792	.708	.918	.659	.901	.827	.781	.718	.807	.951

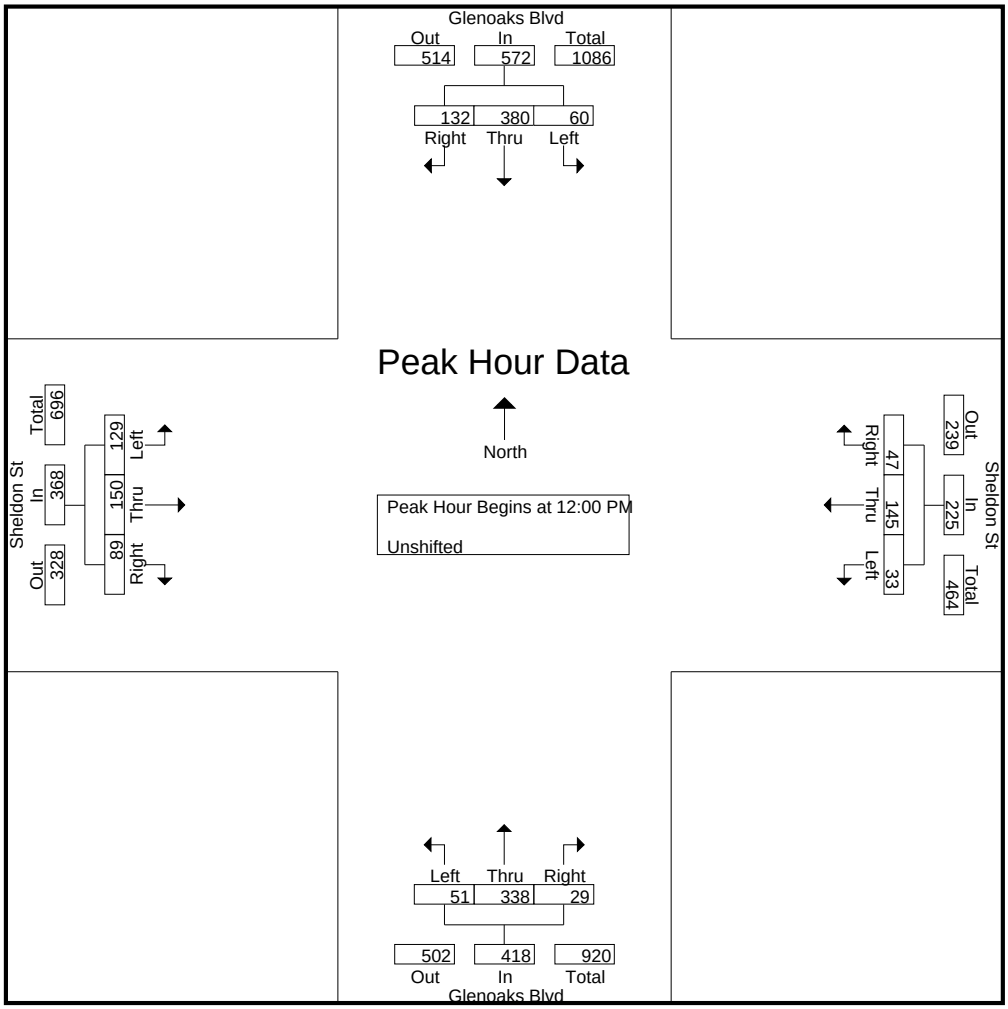

CITY TRAFFIC COUNTERS

626.991.7522

www.ctcounters.com

File Name : GlenOaksSheldon
Site Code : 00000000
Start Date : 1/15/2014
Page No : 4

	Glenoaks Blvd Southbound				Sheldon St Westbound				Glenoaks Blvd Northbound				Sheldon St Eastbound				
Start Time	Left	Thru	Right	App. Total	Left	Thru	Right	App. Total	Left	Thru	Right	App. Total	Left	Thru	Right	App. Total	Int. Total
Peak Hour Analysis From 02:00 PM to 05:45 PM - Peak 1 of 1																	
Peak Hour for Entire Intersection Begins at 04:30 PM																	
04:30 PM	26	148	34	208	11	33	18	62	31	141	13	185	**66**	92	23	181	636
04:45 PM	13	131	**45**	189	7	**51**	9	67	23	188	6	217	66	**102**	18	**186**	659
05:00 PM	24	**175**	39	**238**	**12**	51	14	**77**	**32**	**194**	5	**231**	51	84	**27**	162	**708**
05:15 PM	**28**	113	29	170	5	46	**19**	70	19	164	**16**	199	54	92	25	171	610
Total Volume	91	567	147	805	35	181	60	276	105	687	40	832	237	370	93	700	2613
% App. Total	11.3	70.4	18.3		12.7	65.6	21.7		12.6	82.6	4.8		33.9	52.9	13.3		
PHF	.813	.810	.817	.846	.729	.887	.789	.896	.820	.885	.625	.900	.898	.907	.861	.941	.923

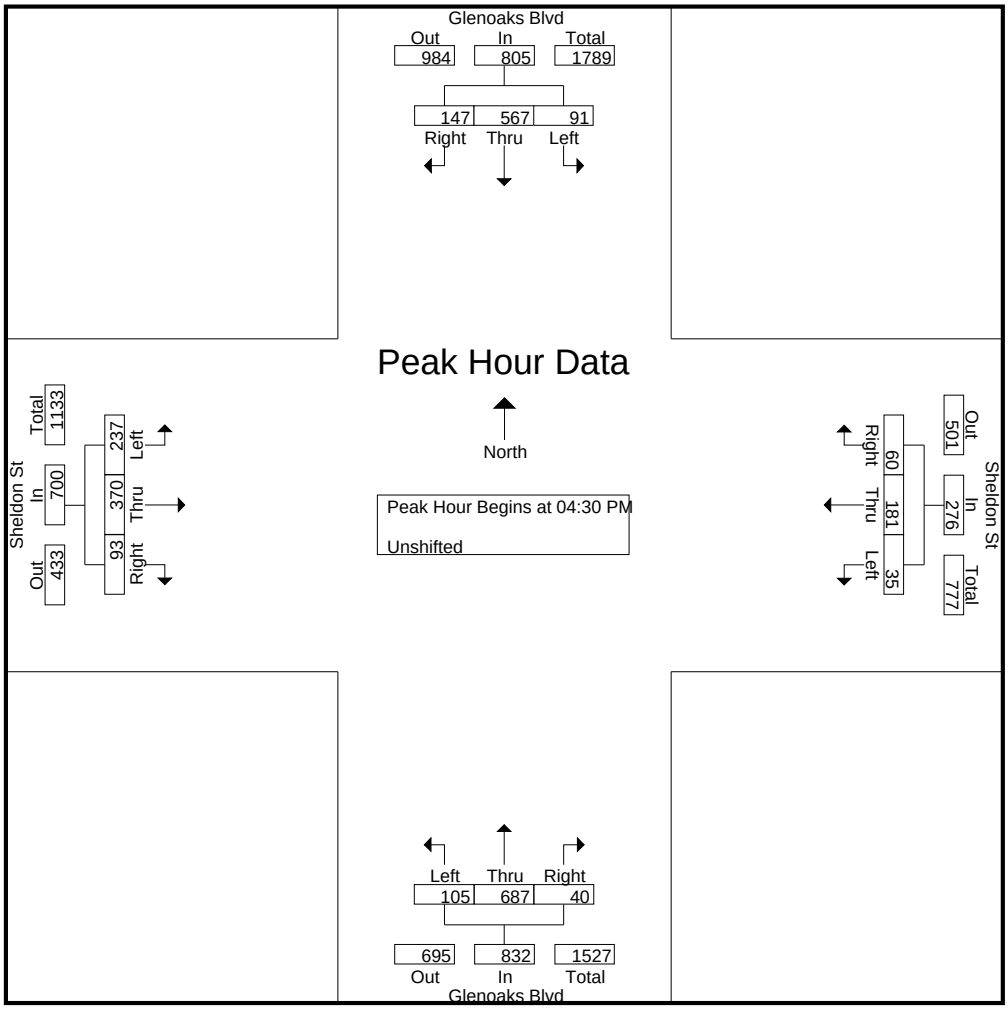

CITY TRAFFIC COUNTERS

626.991.7522

www.ctcounters.com

File Name : GlenOaksSheldon_MC
Site Code : 00000000
Start Date : 1/15/2014
Page No : 1

Groups Printed- Bank 2

	Glenoaks Blvd Southbound			Sheldon St Westbound			Glenoaks Blvd Northbound			Sheldon St Eastbound			
Start Time	Left	Thru	Right	Left	Thru	Right	Left	Thru	Right	Left	Thru	Right	Int. Total
07:15 AM	0	0	0	0	0	0	0	0	1	0	0	0	1
Total	0	0	0	0	0	0	0	0	1	0	0	0	1
08:15 AM	1	0	0	0	0	0	0	0	0	0	0	1	2
Total	1	0	0	0	0	0	0	0	0	0	0	1	2
12:30 PM	0	0	0	1	0	0	0	0	0	0	0	0	1
12:45 PM	0	1	0	0	0	0	0	0	1	0	0	0	2
Total	0	1	0	1	0	0	0	0	1	0	0	0	3
01:45 PM	0	1	0	0	0	0	1	0	0	0	0	0	2
Total	0	1	0	0	0	0	1	0	0	0	0	0	2
03:00 PM	1	1	0	0	0	0	0	0	0	0	0	0	2
03:15 PM	0	0	0	0	0	0	0	0	0	2	3	0	5
03:30 PM	0	1	0	0	0	0	0	0	0	0	0	0	1
03:45 PM	0	3	0	0	0	0	0	0	0	0	0	0	3
Total	1	5	0	0	0	0	0	0	0	2	3	0	11
04:00 PM	0	0	1	0	0	0	0	0	0	0	0	0	1
04:15 PM	0	0	0	0	0	0	1	2	0	1	0	0	4
04:45 PM	0	0	0	0	0	0	0	1	0	0	1	1	3
Total	0	0	1	0	0	0	1	3	0	1	1	1	8
05:00 PM	0	0	0	0	0	0	0	0	0	0	1	1	2
05:30 PM	0	0	0	0	0	0	0	1	0	0	0	0	1
Total	0	0	0	0	0	0	0	1	0	0	1	1	3
Grand Total	2	7	1	1	0	0	2	4	2	3	5	3	30
Apprch %	20	70	10	100	0	0	25	50	25	27.3	45.5	27.3	
Total %	6.7	23.3	3.3	3.3	0	0	6.7	13.3	6.7	10	16.7	10	

CITY TRAFFIC COUNTERS

626.991.7522

www.ctcounters.com

File Name : GlenOaksSheldon_MC
Site Code : 00000000
Start Date : 1/15/2014
Page No : 2

	Glenoaks Blvd Southbound				Sheldon St Westbound				Glenoaks Blvd Northbound				Sheldon St Eastbound				
Start Time	Left	Thru	Right	App. Total	Left	Thru	Right	App. Total	Left	Thru	Right	App. Total	Left	Thru	Right	App. Total	Int. Total
Peak Hour Analysis From 07:00 AM to 09:45 AM - Peak 1 of 1																	
Peak Hour for Entire Intersection Begins at 07:30 AM																	
07:30 AM	0	0	0	0	0	0	0	0	0	0	0	0	0	0	0	0	0
07:45 AM	0	0	0	0	0	0	0	0	0	0	0	0	0	0	0	0	0
08:00 AM	0	0	0	0	0	0	0	0	0	0	0	0	0	0	0	0	0
08:15 AM	**1**	0	0	**1**	0	0	0	0	0	0	0	0	0	0	**1**	**1**	**2**
Total Volume	1	0	0	1	0	0	0	0	0	0	0	0	0	0	1	1	2
% App. Total	100	0	0		0	0	0		0	0	0		0	0	100		
PHF	.250	.000	.000	.250	.000	.000	.000	.000	.000	.000	.000	.000	.000	.000	.250	.250	.250

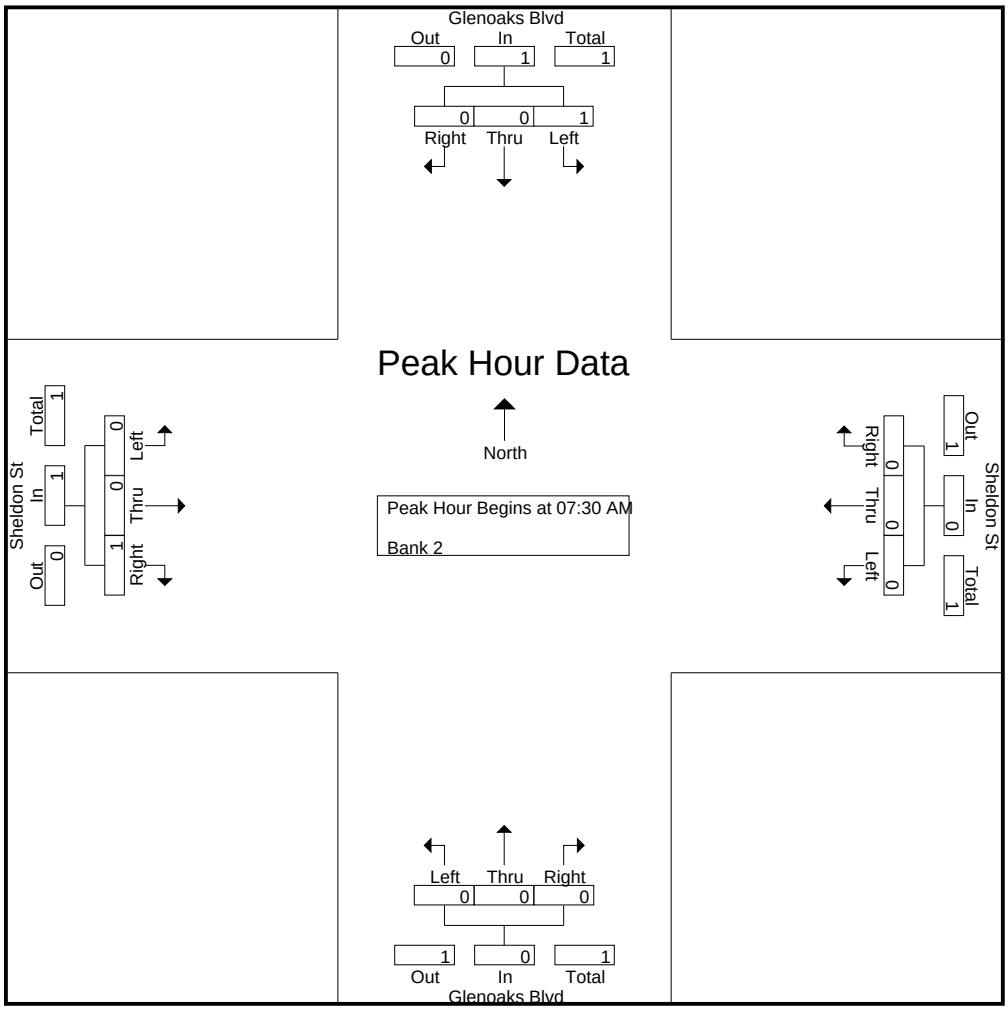

CITY TRAFFIC COUNTERS

626.991.7522

www.ctcounters.com

File Name : GlenOaksSheldon_MC
Site Code : 00000000
Start Date : 1/15/2014
Page No : 3

	Glenoaks Blvd Southbound				Sheldon St Westbound				Glenoaks Blvd Northbound				Sheldon St Eastbound				
Start Time	Left	Thru	Right	App. Total	Left	Thru	Right	App. Total	Left	Thru	Right	App. Total	Left	Thru	Right	App. Total	Int. Total
Peak Hour Analysis From 10:00 AM to 01:45 PM - Peak 1 of 1																	
Peak Hour for Entire Intersection Begins at 12:00 PM																	
12:00 PM	0	0	0	0	0	0	0	0	0	0	0	0	0	0	0	0	0
12:15 PM	0	0	0	0	0	0	0	0	0	0	0	0	0	0	0	0	0
12:30 PM	0	0	0	0	**1**	0	0	**1**	0	0	0	0	0	0	0	0	1
12:45 PM	0	**1**	0	**1**	0	0	0	0	0	0	**1**	**1**	0	0	0	0	**2**
Total Volume	0	1	0	1	1	0	0	1	0	0	1	1	0	0	0	0	3
% App. Total	0	100	0		100	0	0		0	0	100		0	0	0		
PHF	.000	.250	.000	.250	.250	.000	.000	.250	.000	.000	.250	.250	.000	.000	.000	.000	.375

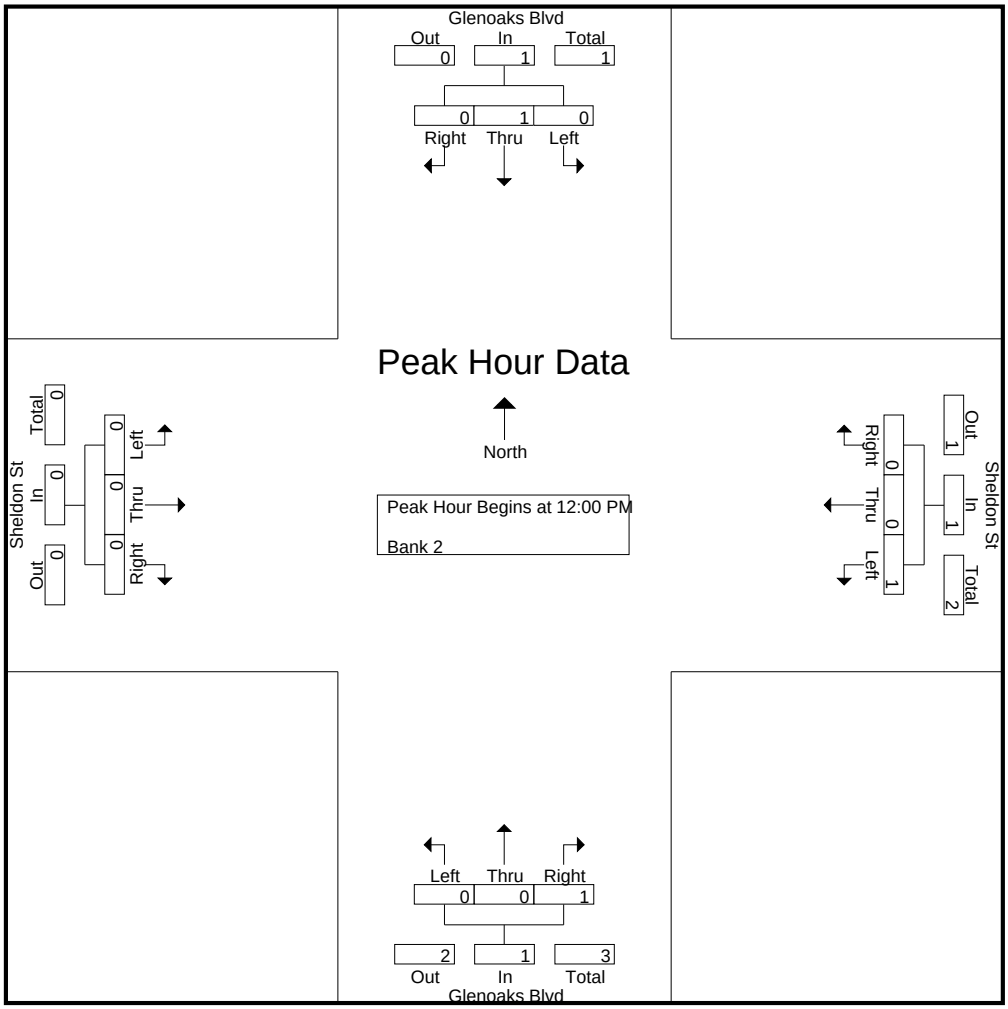

CITY TRAFFIC COUNTERS

626.991.7522

www.ctcounters.com

File Name : GlenOaksSheldon_MC
Site Code : 00000000
Start Date : 1/15/2014
Page No : 4

	Glenoaks Blvd Southbound				Sheldon St Westbound				Glenoaks Blvd Northbound				Sheldon St Eastbound				
Start Time	Left	Thru	Right	App. Total	Left	Thru	Right	App. Total	Left	Thru	Right	App. Total	Left	Thru	Right	App. Total	Int. Total
Peak Hour Analysis From 02:00 PM to 05:45 PM - Peak 1 of 1																	
Peak Hour for Entire Intersection Begins at 03:00 PM																	
03:00 PM	**1**	1	0	2	0	0	0	0	0	0	0	0	0	0	0	0	2
03:15 PM	0	0	0	0	0	0	0	0	0	0	0	0	**2**	**3**	0	**5**	**5**
03:30 PM	0	1	0	1	0	0	0	0	0	0	0	0	0	0	0	0	1
03:45 PM	0	**3**	0	**3**	0	0	0	0	0	0	0	0	0	0	0	0	3
Total Volume	1	5	0	6	0	0	0	0	0	0	0	0	2	3	0	5	11
% App. Total	16.7	83.3	0		0	0	0		0	0	0		40	60	0		
PHF	.250	.417	.000	.500	.000	.000	.000	.000	.000	.000	.000	.000	.250	.250	.000	.250	.550

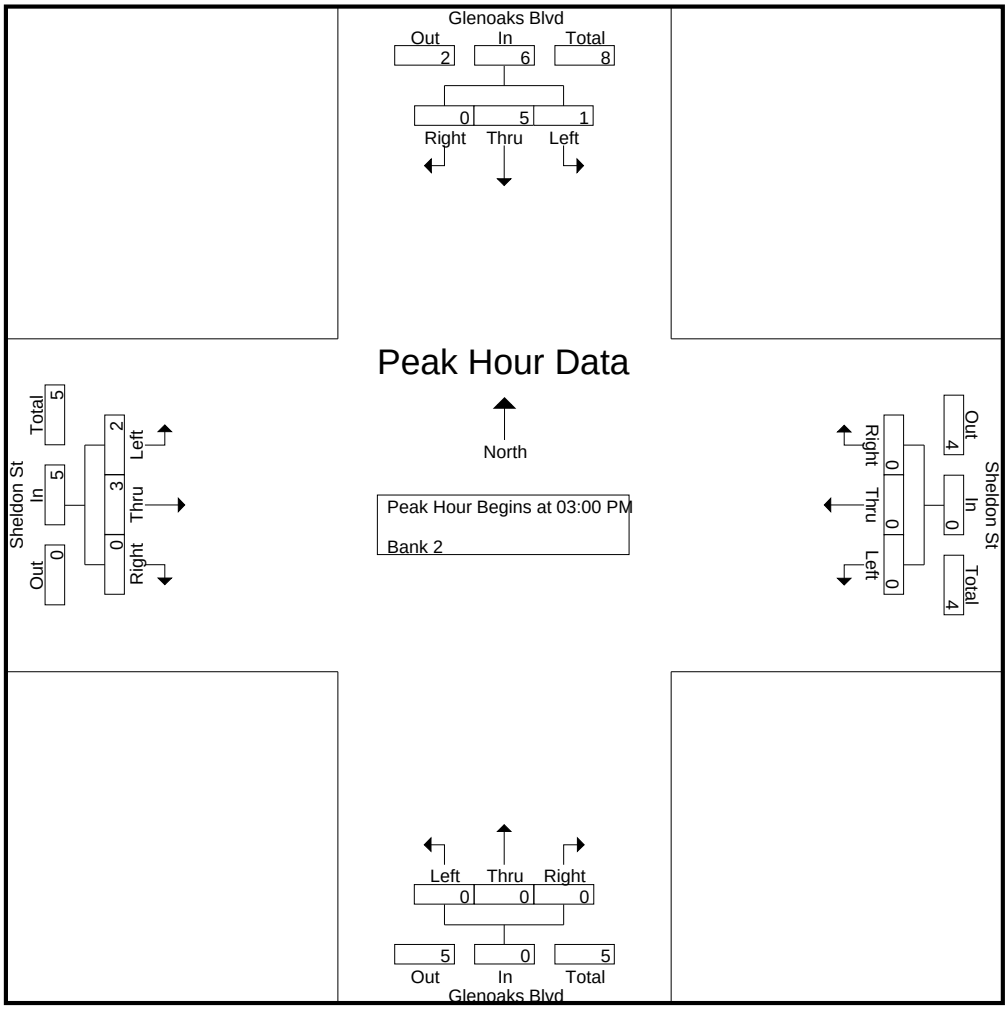

CITY TRAFFIC COUNTERS

626.991.7522

www.ctcounters.com

File Name : GlenOaksSheldon_Bus
Site Code : 00000000
Start Date : 1/15/2014
Page No : 1

Groups Printed- Bank 1

	Glenoaks Blvd Southbound			Sheldon St Westbound			Glenoaks Blvd Northbound			Sheldon St Eastbound			
Start Time	Left	Thru	Right	Left	Thru	Right	Left	Thru	Right	Left	Thru	Right	Int. Total
07:00 AM	0	1	1	0	0	0	0	0	0	0	2	0	4
07:15 AM	0	1	1	0	0	0	0	0	0	0	1	0	3
07:30 AM	0	0	0	0	1	0	0	0	1	0	1	0	3
07:45 AM	0	1	0	0	0	0	0	1	0	0	1	0	3
Total	0	3	2	0	1	0	0	1	1	0	5	0	13
08:00 AM	0	1	0	0	0	0	0	0	0	0	0	0	1
08:15 AM	0	0	0	0	0	0	0	1	0	1	0	0	2
08:30 AM	0	0	0	0	0	1	0	0	0	1	1	0	3
08:45 AM	0	0	0	0	0	1	0	2	0	0	0	1	4
Total	0	1	0	0	0	2	0	3	0	2	1	1	10
09:00 AM	0	0	0	0	0	0	0	0	0	3	0	0	3
09:15 AM	0	1	0	0	0	0	0	3	0	0	0	0	4
09:30 AM	0	1	0	0	0	1	0	0	0	1	0	1	4
Total	0	2	0	0	0	1	0	3	0	4	0	1	11
12:00 PM	0	1	0	0	2	0	0	0	0	0	1	0	4
12:30 PM	0	2	0	0	0	0	0	1	0	0	0	0	3
Total	0	3	0	0	2	0	0	1	0	0	1	0	7
01:00 PM	0	1	0	0	0	0	0	0	0	0	0	0	1
01:15 PM	0	0	1	0	1	0	0	0	0	0	0	0	2
01:30 PM	0	1	0	0	0	0	0	0	0	0	0	0	1
01:45 PM	0	1	0	0	0	0	1	0	0	0	1	0	3
Total	0	3	1	0	1	0	1	0	0	0	1	0	7
03:00 PM	3	3	2	0	0	1	0	1	0	0	0	0	10
03:15 PM	0	1	1	0	0	0	0	0	0	0	0	0	2
03:30 PM	0	4	0	0	1	1	0	0	0	0	0	0	6
03:45 PM	0	1	0	0	0	1	0	2	0	0	0	0	4
Total	3	9	3	0	1	3	0	3	0	0	0	0	22
04:00 PM	0	2	1	0	0	0	0	1	0	3	1	1	9
04:15 PM	0	3	0	0	0	0	0	1	0	1	1	0	6
04:30 PM	0	0	0	0	0	0	0	2	0	0	0	0	2
04:45 PM	0	3	0	0	0	0	0	0	0	1	0	0	4
Total	0	8	1	0	0	0	0	4	0	5	2	1	21
05:00 PM	0	1	0	0	0	0	0	3	0	0	0	0	4
05:30 PM	0	2	0	0	0	1	1	4	0	0	0	0	8
05:45 PM	0	1	0	0	0	0	0	4	0	0	1	0	6
Total	0	4	0	0	0	1	1	11	0	0	1	0	18
Grand Total	3	33	7	0	5	7	2	26	1	11	11	3	109
Apprch %	7	76.7	16.3	0	41.7	58.3	6.9	89.7	3.4	44	44	12	
Total %	2.8	30.3	6.4	0	4.6	6.4	1.8	23.9	0.9	10.1	10.1	2.8	

CITY TRAFFIC COUNTERS

626.991.7522

www.ctcounters.com

File Name : GlenOaksSheldon_Bus
Site Code : 00000000
Start Date : 1/15/2014
Page No : 2

	Glenoaks Blvd Southbound				Sheldon St Westbound				Glenoaks Blvd Northbound				Sheldon St Eastbound				
Start Time	Left	Thru	Right	App. Total	Left	Thru	Right	App. Total	Left	Thru	Right	App. Total	Left	Thru	Right	App. Total	Int. Total
Peak Hour Analysis From 07:00 AM to 09:45 AM - Peak 1 of 1																	
Peak Hour for Entire Intersection Begins at 08:45 AM																	
08:45 AM	0	0	0	0	0	0	**1**	**1**	0	2	0	2	0	0	**1**	1	**4**
09:00 AM	0	0	0	0	0	0	0	0	0	0	0	0	**3**	0	0	**3**	3
09:15 AM	0	**1**	0	**1**	0	0	0	0	0	**3**	0	**3**	0	0	0	0	4
09:30 AM	0	1	0	1	0	0	1	1	0	0	0	0	1	0	1	2	4
Total Volume	0	2	0	2	0	0	2	2	0	5	0	5	4	0	2	6	15
% App. Total	0	100	0		0	0	100		0	100	0		66.7	0	33.3		
PHF	.000	.500	.000	.500	.000	.000	.500	.500	.000	.417	.000	.417	.333	.000	.500	.500	.938

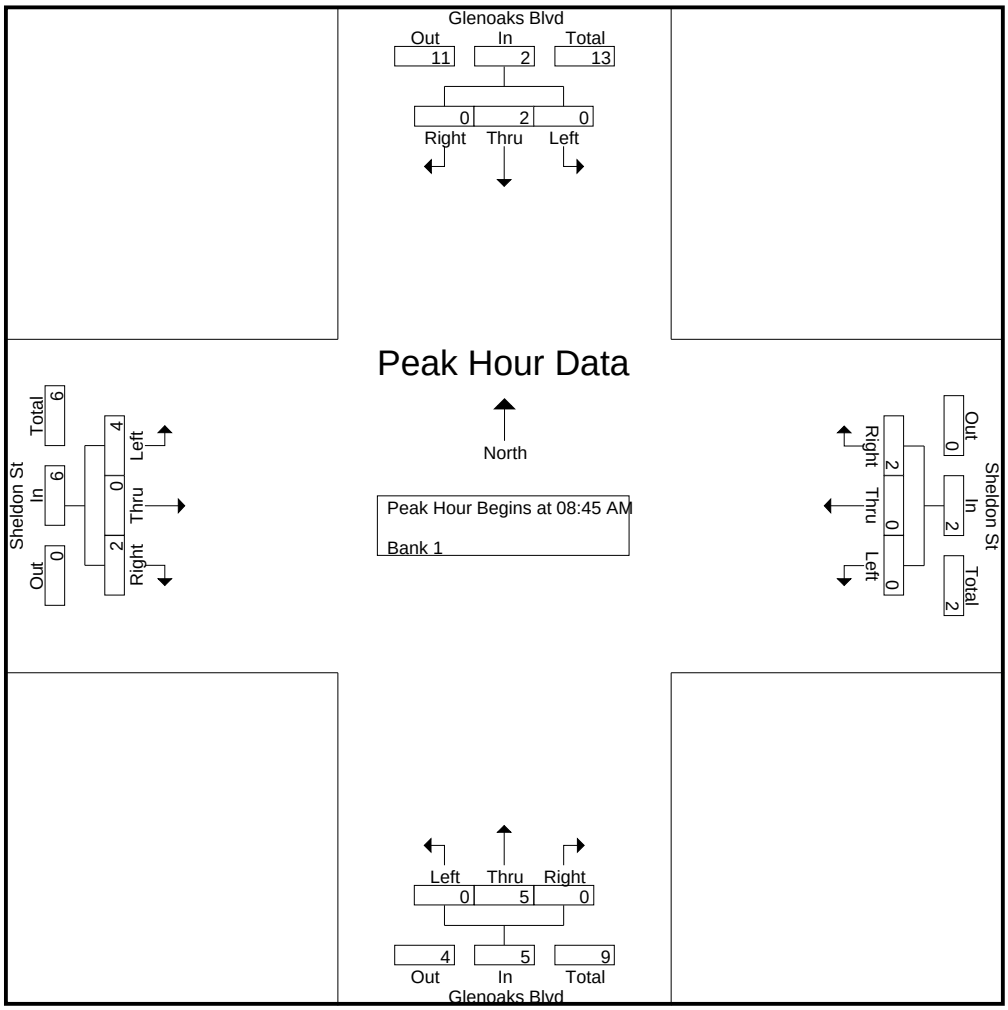

CITY TRAFFIC COUNTERS

626.991.7522

www.ctcounters.com

File Name : GlenOaksSheldon_Bus
Site Code : 00000000
Start Date : 1/15/2014
Page No : 3

	Glenoaks Blvd Southbound				Sheldon St Westbound				Glenoaks Blvd Northbound				Sheldon St Eastbound				
Start Time	Left	Thru	Right	App. Total	Left	Thru	Right	App. Total	Left	Thru	Right	App. Total	Left	Thru	Right	App. Total	Int. Total
Peak Hour Analysis From 10:00 AM to 01:45 PM - Peak 1 of 1																	
Peak Hour for Entire Intersection Begins at 11:45 AM																	
11:45 AM	0	0	0	0	0	0	0	0	0	0	0	0	0	0	0	0	0
12:00 PM	0	1	0	1	0	**2**	0	**2**	0	0	0	0	0	**1**	0	**1**	**4**
12:15 PM	0	0	0	0	0	0	0	0	0	0	0	0	0	0	0	0	0
12:30 PM	0	**2**	0	**2**	0	0	0	0	0	**1**	0	**1**	0	0	0	0	3
Total Volume	0	3	0	3	0	2	0	2	0	1	0	1	0	1	0	1	7
% App. Total	0	100	0		0	100	0		0	100	0		0	100	0		
PHF	.000	.375	.000	.375	.000	.250	.000	.250	.000	.250	.000	.250	.000	.250	.000	.250	.438

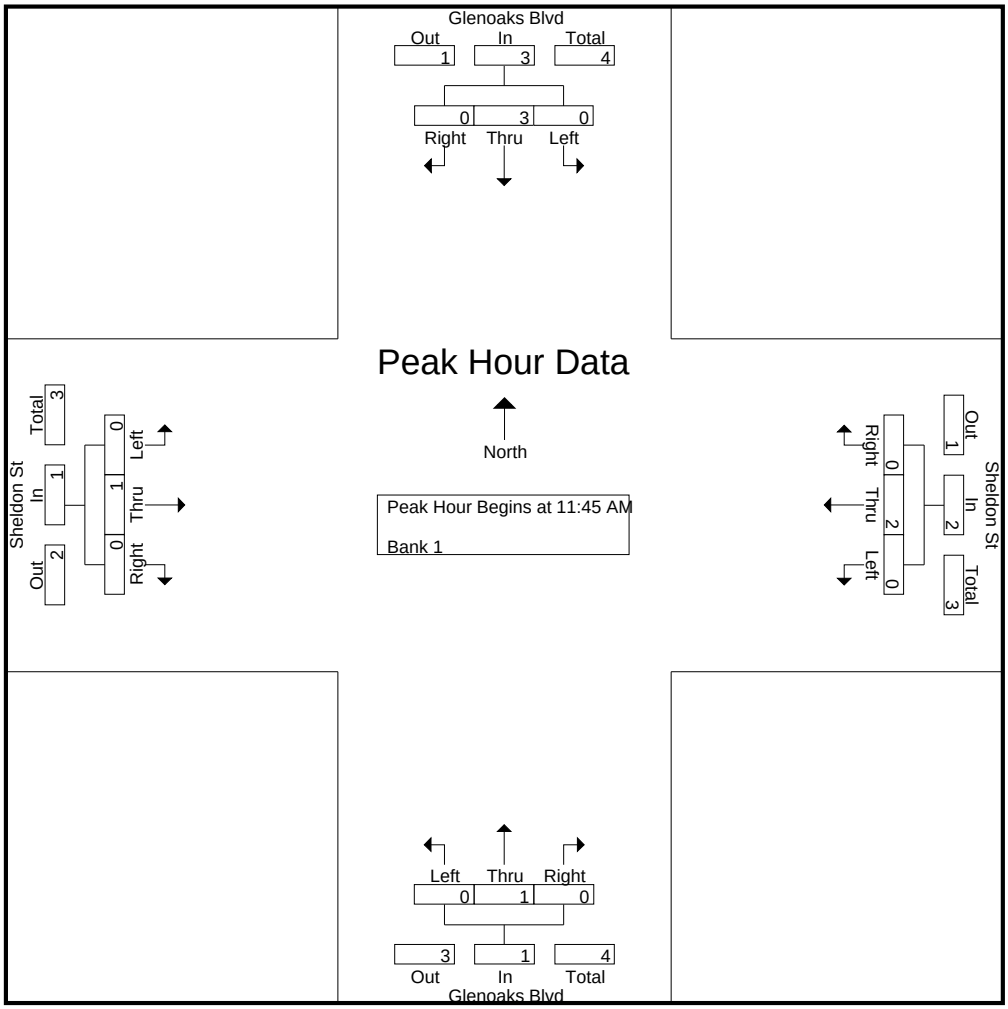

CITY TRAFFIC COUNTERS

626.991.7522

www.ctcounters.com

File Name : GlenOaksSheldon_Bus
Site Code : 00000000
Start Date : 1/15/2014
Page No : 4

	Glenoaks Blvd Southbound				Sheldon St Westbound				Glenoaks Blvd Northbound				Sheldon St Eastbound				
Start Time	Left	Thru	Right	App. Total	Left	Thru	Right	App. Total	Left	Thru	Right	App. Total	Left	Thru	Right	App. Total	Int. Total
Peak Hour Analysis From 02:00 PM to 05:45 PM - Peak 1 of 1																	
Peak Hour for Entire Intersection Begins at 03:30 PM																	
03:30 PM	0	**4**	0	**4**	0	**1**	**1**	**2**	0	0	0	0	0	0	0	0	6
03:45 PM	0	1	0	1	0	0	1	1	0	**2**	0	**2**	0	0	0	0	4
04:00 PM	0	2	**1**	3	0	0	0	0	0	1	0	1	**3**	**1**	**1**	**5**	**9**
04:15 PM	0	3	0	3	0	0	0	0	0	1	0	1	1	1	0	2	6
Total Volume	0	10	1	11	0	1	2	3	0	4	0	4	4	2	1	7	25
% App. Total	0	90.9	9.1		0	33.3	66.7		0	100	0		57.1	28.6	14.3		
PHF	.000	.625	.250	.688	.000	.250	.500	.375	.000	.500	.000	.500	.333	.500	.250	.350	.694

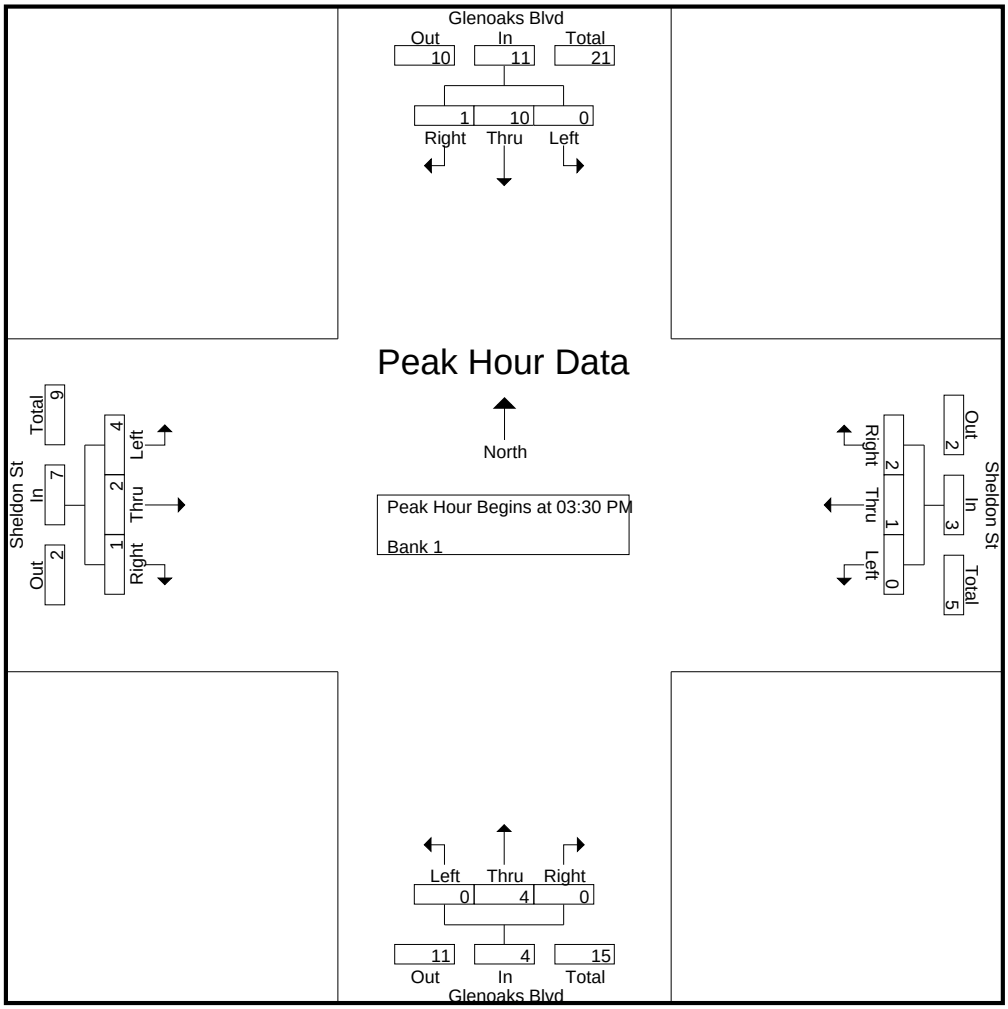

CITY TRAFFIC COUNTERS

626.991.7522

www.ctcounters.com

File Name : GlenOaksSheldon_2Axle
Site Code : 00000000
Start Date : 1/15/2014
Page No : 1

Groups Printed- Bank 2

	Glenoaks Blvd Southbound			Sheldon St Westbound			Glenoaks Blvd Northbound			Sheldon St Eastbound			
Start Time	Left	Thru	Right	Left	Thru	Right	Left	Thru	Right	Left	Thru	Right	Int. Total
07:00 AM	0	3	1	0	2	2	0	4	0	3	0	1	16
07:15 AM	0	4	1	0	1	1	1	1	0	2	1	3	15
07:30 AM	0	6	4	0	0	0	0	3	1	0	0	1	15
07:45 AM	0	1	2	0	1	1	0	5	1	0	3	0	14
Total	0	14	8	0	4	4	1	13	2	5	4	5	60
08:00 AM	1	4	0	0	0	0	0	2	0	0	1	1	9
08:15 AM	1	7	1	0	1	0	0	2	1	3	1	2	19
08:30 AM	0	5	4	0	3	1	1	2	0	1	2	4	23
08:45 AM	2	7	1	1	0	1	3	1	0	5	2	4	27
Total	4	23	6	1	4	2	4	7	1	9	6	11	78
09:00 AM	1	6	2	0	1	1	0	4	2	1	2	3	23
09:15 AM	2	8	4	0	2	0	0	2	1	1	1	0	21
09:30 AM	0	4	3	0	1	1	5	5	1	2	3	2	27
09:45 AM	3	5	2	0	1	1	1	5	1	3	4	3	29
Total	6	23	11	0	5	3	6	16	5	7	10	8	100
12:00 PM	0	5	3	4	1	1	1	5	0	2	1	1	24
12:15 PM	0	6	4	0	3	1	0	2	1	1	2	0	20
12:30 PM	0	5	2	1	0	1	0	4	1	2	2	3	21
12:45 PM	3	4	0	0	1	1	4	4	0	0	2	1	20
Total	3	20	9	5	5	4	5	15	2	5	7	5	85
01:00 PM	1	7	0	0	3	0	0	5	0	5	1	2	24
01:15 PM	1	5	1	1	3	0	0	2	0	3	8	2	26
01:30 PM	0	5	0	0	1	0	1	4	0	0	4	0	15
01:45 PM	1	7	1	0	1	1	0	2	0	1	3	1	18
Total	3	24	2	1	8	1	1	13	0	9	16	5	83
03:00 PM	0	13	3	1	4	0	3	8	0	2	1	1	36
03:15 PM	1	1	1	0	2	0	1	4	0	1	3	2	16
03:30 PM	0	10	1	1	5	1	4	5	0	1	2	1	31
03:45 PM	2	4	1	0	0	0	1	3	2	0	1	5	19
Total	3	28	6	2	11	1	9	20	2	4	7	9	102
04:00 PM	0	6	1	1	0	0	2	9	0	0	3	4	26
04:15 PM	1	0	0	0	2	0	0	7	1	2	2	1	16
04:30 PM	3	8	1	2	2	4	2	5	1	0	0	0	28
04:45 PM	0	2	0	0	1	2	0	2	0	4	0	0	11
Total	4	16	2	3	5	6	4	23	2	6	5	5	81
05:00 PM	1	4	0	0	2	0	0	6	1	2	0	0	16
05:15 PM	0	2	0	4	0	0	0	4	0	0	2	0	12
05:30 PM	0	2	0	0	2	1	3	5	0	1	0	0	14
05:45 PM	0	3	0	0	0	0	0	4	0	1	2	0	10
Total	1	11	0	4	4	1	3	19	1	4	4	0	52
Grand Total	24	159	44	16	46	22	33	126	15	49	59	48	641
Apprch %	10.6	70	19.4	19	54.8	26.2	19	72.4	8.6	31.4	37.8	30.8	
Total %	3.7	24.8	6.9	2.5	7.2	3.4	5.1	19.7	2.3	7.6	9.2	7.5	

CITY TRAFFIC COUNTERS

626.991.7522

www.ctcounters.com

File Name : GlenOaksSheldon_2Axle
Site Code : 00000000
Start Date : 1/15/2014
Page No : 2

	Glenoaks Blvd Southbound				Sheldon St Westbound				Glenoaks Blvd Northbound				Sheldon St Eastbound				
Start Time	Left	Thru	Right	App. Total	Left	Thru	Right	App. Total	Left	Thru	Right	App. Total	Left	Thru	Right	App. Total	Int. Total
Peak Hour Analysis From 07:00 AM to 09:45 AM - Peak 1 of 1																	
Peak Hour for Entire Intersection Begins at 09:00 AM																	
09:00 AM	1	6	2	9	0	1	**1**	**2**	0	4	**2**	6	1	2	**3**	6	23
09:15 AM	2	**8**	**4**	**14**	0	**2**	0	2	0	2	1	3	1	1	0	2	21
09:30 AM	0	4	3	7	0	1	1	2	**5**	**5**	1	**11**	2	3	2	7	27
09:45 AM	**3**	5	2	10	0	1	1	2	1	5	1	7	**3**	**4**	3	**10**	**29**
Total Volume	6	23	11	40	0	5	3	8	6	16	5	27	7	10	8	25	100
% App. Total	15	57.5	27.5		0	62.5	37.5		22.2	59.3	18.5		28	40	32		
PHF	.500	.719	.688	.714	.000	.625	.750	1.00	.300	.800	.625	.614	.583	.625	.667	.625	.862

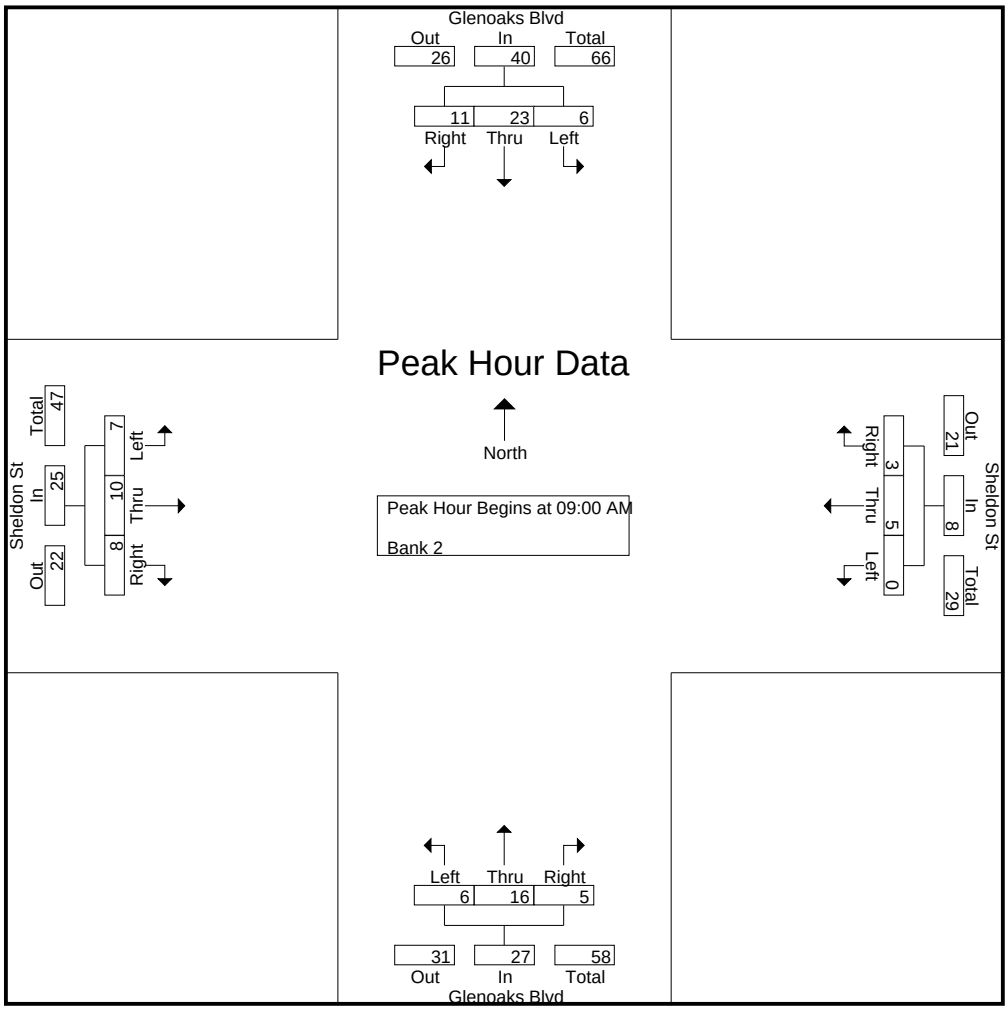

CITY TRAFFIC COUNTERS

626.991.7522

www.ctcounters.com

File Name : GlenOaksSheldon_2Axle
Site Code : 00000000
Start Date : 1/15/2014
Page No : 3

	Glenoaks Blvd Southbound				Sheldon St Westbound				Glenoaks Blvd Northbound				Sheldon St Eastbound				
Start Time	Left	Thru	Right	App. Total	Left	Thru	Right	App. Total	Left	Thru	Right	App. Total	Left	Thru	Right	App. Total	Int. Total
Peak Hour Analysis From 10:00 AM to 01:45 PM - Peak 1 of 1																	
Peak Hour for Entire Intersection Begins at 12:30 PM																	
12:30 PM	0	5	**2**	7	**1**	0	**1**	2	0	4	**1**	5	2	2	**3**	7	21
12:45 PM	**3**	4	0	7	0	1	1	2	**4**	4	0	**8**	0	2	1	3	20
01:00 PM	1	**7**	0	**8**	0	**3**	0	3	0	**5**	0	5	**5**	1	2	8	24
01:15 PM	1	5	1	7	1	3	0	**4**	0	2	0	2	3	**8**	2	**13**	**26**
Total Volume	5	21	3	29	2	7	2	11	4	15	1	20	10	13	8	31	91
% App. Total	17.2	72.4	10.3		18.2	63.6	18.2		20	75	5		32.3	41.9	25.8		
PHF	.417	.750	.375	.906	.500	.583	.500	.688	.250	.750	.250	.625	.500	.406	.667	.596	.875

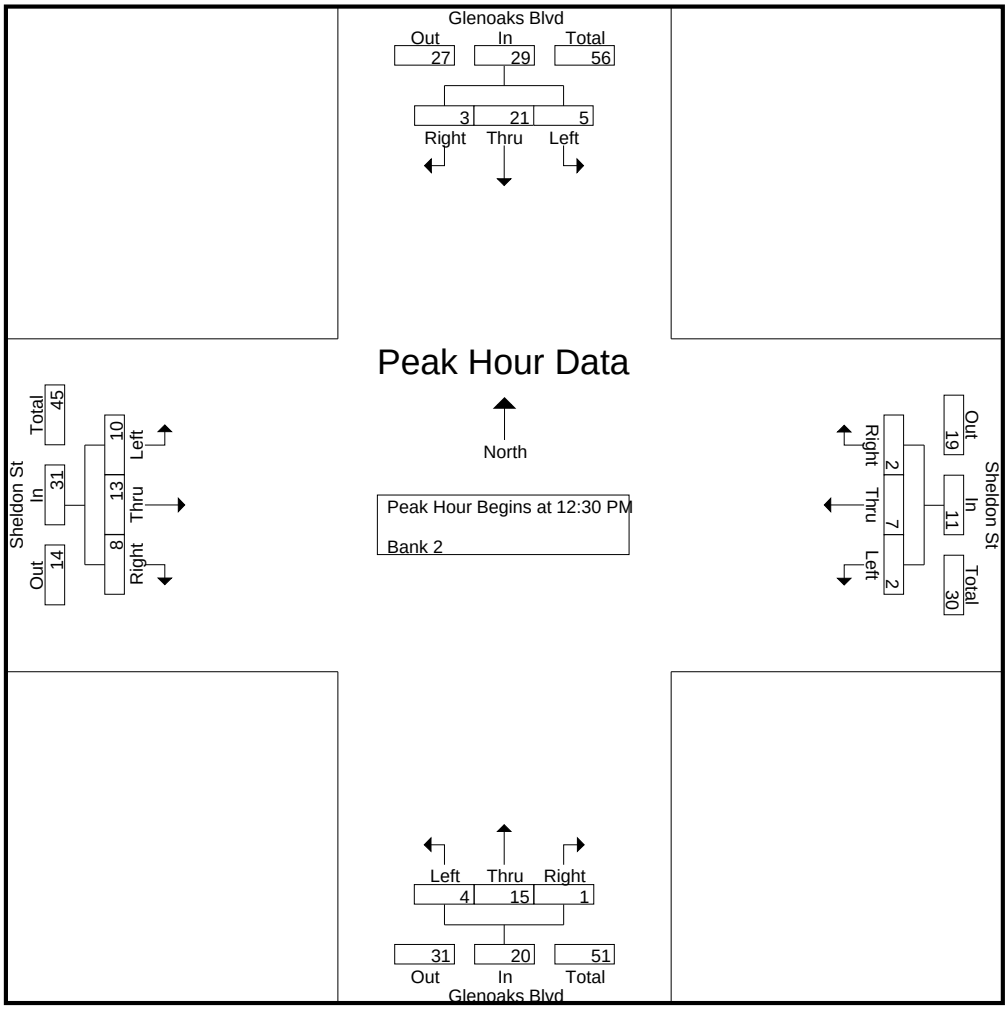

CITY TRAFFIC COUNTERS

626.991.7522

www.ctcounters.com

File Name : GlenOaksSheldon_2Axle
Site Code : 00000000
Start Date : 1/15/2014
Page No : 4

	Glenoaks Blvd Southbound				Sheldon St Westbound				Glenoaks Blvd Northbound				Sheldon St Eastbound				
Start Time	Left	Thru	Right	App. Total	Left	Thru	Right	App. Total	Left	Thru	Right	App. Total	Left	Thru	Right	App. Total	Int. Total
Peak Hour Analysis From 02:00 PM to 05:45 PM - Peak 1 of 1																	
Peak Hour for Entire Intersection Begins at 03:00 PM																	
03:00 PM	0	**13**	**3**	**16**	**1**	4	0	5	3	**8**	0	**11**	**2**	1	1	4	**36**
03:15 PM	1	1	1	3	0	2	0	2	1	4	0	5	1	**3**	2	**6**	16
03:30 PM	0	10	1	11	1	**5**	**1**	**7**	**4**	5	0	9	1	2	1	4	31
03:45 PM	**2**	4	1	7	0	0	0	0	1	3	**2**	6	0	1	**5**	6	19
Total Volume	3	28	6	37	2	11	1	14	9	20	2	31	4	7	9	20	102
% App. Total	8.1	75.7	16.2		14.3	78.6	7.1		29	64.5	6.5		20	35	45		
PHF	.375	.538	.500	.578	.500	.550	.250	.500	.563	.625	.250	.705	.500	.583	.450	.833	.708

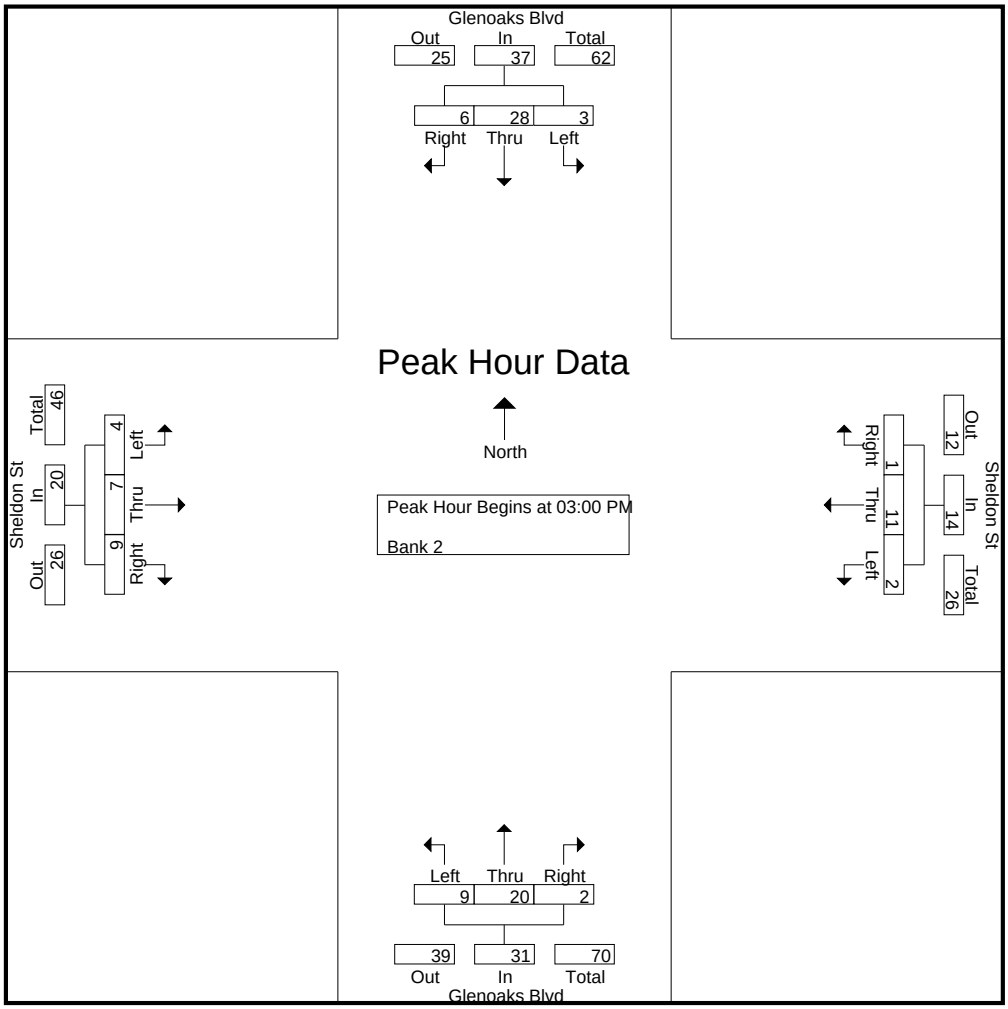

CITY TRAFFIC COUNTERS

626.991.7522

www.ctcounters.com

File Name : GlenOaksSheldon_3Axle
Site Code : 00000000
Start Date : 1/15/2014
Page No : 1

Groups Printed- Bank 2

	Glenoaks Blvd Southbound			Sheldon St Westbound			Glenoaks Blvd Northbound			Sheldon St Eastbound			
Start Time	Left	Thru	Right	Left	Thru	Right	Left	Thru	Right	Left	Thru	Right	Int. Total
07:00 AM	0	3	2	0	1	0	0	0	0	1	1	0	8
07:15 AM	0	5	0	1	0	0	3	6	0	1	1	0	17
07:30 AM	0	1	0	0	1	0	1	2	0	1	2	0	8
07:45 AM	1	4	0	0	0	0	3	1	0	0	0	0	9
Total	1	13	2	1	2	0	7	9	0	3	4	0	42
08:00 AM	0	5	2	0	2	0	2	2	0	0	1	1	15
08:15 AM	1	5	2	0	0	0	0	6	0	0	3	0	17
08:30 AM	0	4	1	0	0	0	1	1	0	1	0	1	9
08:45 AM	0	3	1	0	0	0	2	3	0	3	3	0	15
Total	1	17	6	0	2	0	5	12	0	4	7	2	56
09:00 AM	2	10	2	0	1	1	4	1	0	0	2	0	23
09:15 AM	2	5	0	0	0	0	4	2	0	1	2	0	16
09:30 AM	0	4	2	0	0	0	8	1	0	5	0	1	21
09:45 AM	0	2	2	0	2	0	2	2	0	1	3	2	16
Total	4	21	6	0	3	1	18	6	0	7	7	3	76
12:00 PM	0	1	1	2	1	0	7	1	1	0	4	0	18
12:15 PM	0	3	1	1	1	1	4	1	1	1	2	0	16
12:30 PM	1	5	0	0	0	0	11	4	1	1	1	0	24
12:45 PM	0	2	0	0	0	1	5	2	0	1	4	0	15
Total	1	11	2	3	2	2	27	8	3	3	11	0	73
01:00 PM	2	3	3	0	0	1	3	0	0	1	1	1	15
01:15 PM	2	1	0	0	0	0	8	3	1	1	0	1	17
01:30 PM	0	6	1	0	0	0	2	2	0	2	4	2	19
01:45 PM	0	7	0	0	0	0	0	1	0	3	3	1	15
Total	4	17	4	0	0	1	13	6	1	7	8	5	66
03:00 PM	0	3	2	1	0	1	3	2	3	0	1	7	23
03:15 PM	0	2	1	0	0	0	2	2	0	1	0	4	12
03:30 PM	0	2	0	5	0	0	0	5	2	1	0	2	17
03:45 PM	2	2	0	1	0	0	16	8	0	2	1	0	32
Total	2	9	3	7	0	1	21	17	5	4	2	13	84
04:00 PM	0	2	1	1	0	0	0	1	0	1	0	0	6
04:15 PM	0	0	0	1	0	0	0	4	0	7	0	2	14
04:30 PM	0	2	0	1	0	0	1	1	0	1	0	0	6
04:45 PM	0	1	0	0	0	0	1	0	0	1	0	4	7
Total	0	5	1	3	0	0	2	6	0	10	0	6	33
05:00 PM	0	4	0	0	0	0	1	1	0	3	0	3	12
05:15 PM	0	0	0	0	0	0	0	1	0	6	0	1	8
05:30 PM	0	0	0	0	0	0	0	0	0	4	0	1	5
05:45 PM	0	1	0	0	0	0	0	1	0	2	0	1	5
Total	0	5	0	0	0	0	1	3	0	15	0	6	30
Grand Total	13	98	24	14	9	5	94	67	9	53	39	35	460
Apprch %	9.6	72.6	17.8	50	32.1	17.9	55.3	39.4	5.3	41.7	30.7	27.6	
Total %	2.8	21.3	5.2	3	2	1.1	20.4	14.6	2	11.5	8.5	7.6	

CITY TRAFFIC COUNTERS

626.991.7522

www.ctcounters.com

File Name : GlenOaksSheldon_3Axle
Site Code : 00000000
Start Date : 1/15/2014
Page No : 2

	Glenoaks Blvd Southbound				Sheldon St Westbound				Glenoaks Blvd Northbound				Sheldon St Eastbound				
Start Time	Left	Thru	Right	App. Total	Left	Thru	Right	App. Total	Left	Thru	Right	App. Total	Left	Thru	Right	App. Total	Int. Total
Peak Hour Analysis From 07:00 AM to 09:45 AM - Peak 1 of 1																	
Peak Hour for Entire Intersection Begins at 09:00 AM																	
09:00 AM	**2**	**10**	**2**	**14**	0	1	**1**	**2**	4	1	0	5	0	2	0	2	**23**
09:15 AM	2	5	0	7	0	0	0	0	4	**2**	0	6	1	2	0	3	16
09:30 AM	0	4	2	6	0	0	0	0	**8**	1	0	**9**	**5**	0	1	**6**	21
09:45 AM	0	2	2	4	0	**2**	0	2	2	2	0	4	1	**3**	**2**	6	16
Total Volume	4	21	6	31	0	3	1	4	18	6	0	24	7	7	3	17	76
% App. Total	12.9	67.7	19.4		0	75	25		75	25	0		41.2	41.2	17.6		
PHF	.500	.525	.750	.554	.000	.375	.250	.500	.563	.750	.000	.667	.350	.583	.375	.708	.826

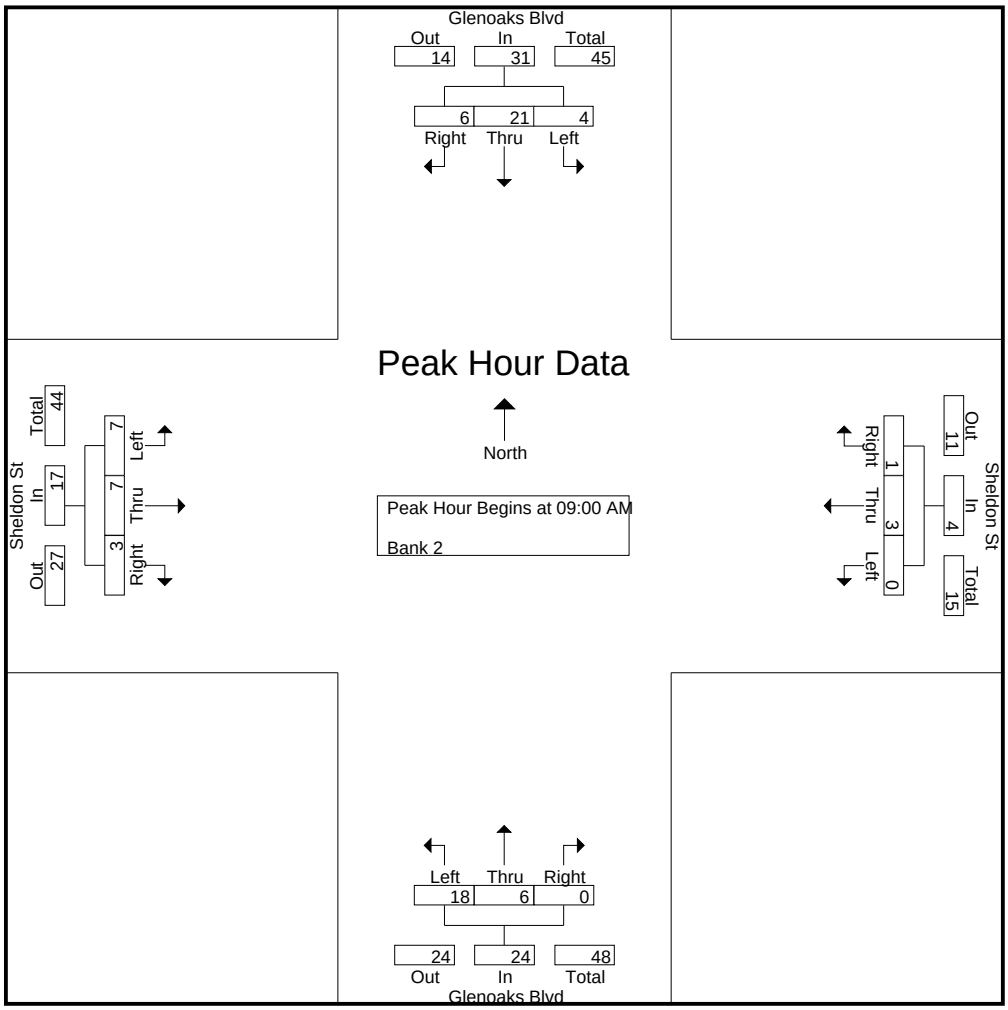

CITY TRAFFIC COUNTERS

626.991.7522

www.ctcounters.com

File Name : GlenOaksSheldon_3Axle
Site Code : 00000000
Start Date : 1/15/2014
Page No : 3

	Glenoaks Blvd Southbound				Sheldon St Westbound				Glenoaks Blvd Northbound				Sheldon St Eastbound				
Start Time	Left	Thru	Right	App. Total	Left	Thru	Right	App. Total	Left	Thru	Right	App. Total	Left	Thru	Right	App. Total	Int. Total
Peak Hour Analysis From 10:00 AM to 01:45 PM - Peak 1 of 1																	
Peak Hour for Entire Intersection Begins at 12:00 PM																	
12:00 PM	0	1	**1**	2	**2**	**1**	0	**3**	7	1	**1**	9	0	**4**	0	4	18
12:15 PM	0	3	1	4	1	1	**1**	3	4	1	1	6	**1**	2	0	3	16
12:30 PM	**1**	**5**	0	**6**	0	0	0	0	**11**	**4**	1	**16**	1	1	0	2	**24**
12:45 PM	0	2	0	2	0	0	1	1	5	2	0	7	1	4	0	**5**	15
Total Volume	1	11	2	14	3	2	2	7	27	8	3	38	3	11	0	14	73
% App. Total	7.1	78.6	14.3		42.9	28.6	28.6		71.1	21.1	7.9		21.4	78.6	0		
PHF	.250	.550	.500	.583	.375	.500	.500	.583	.614	.500	.750	.594	.750	.688	.000	.700	.760

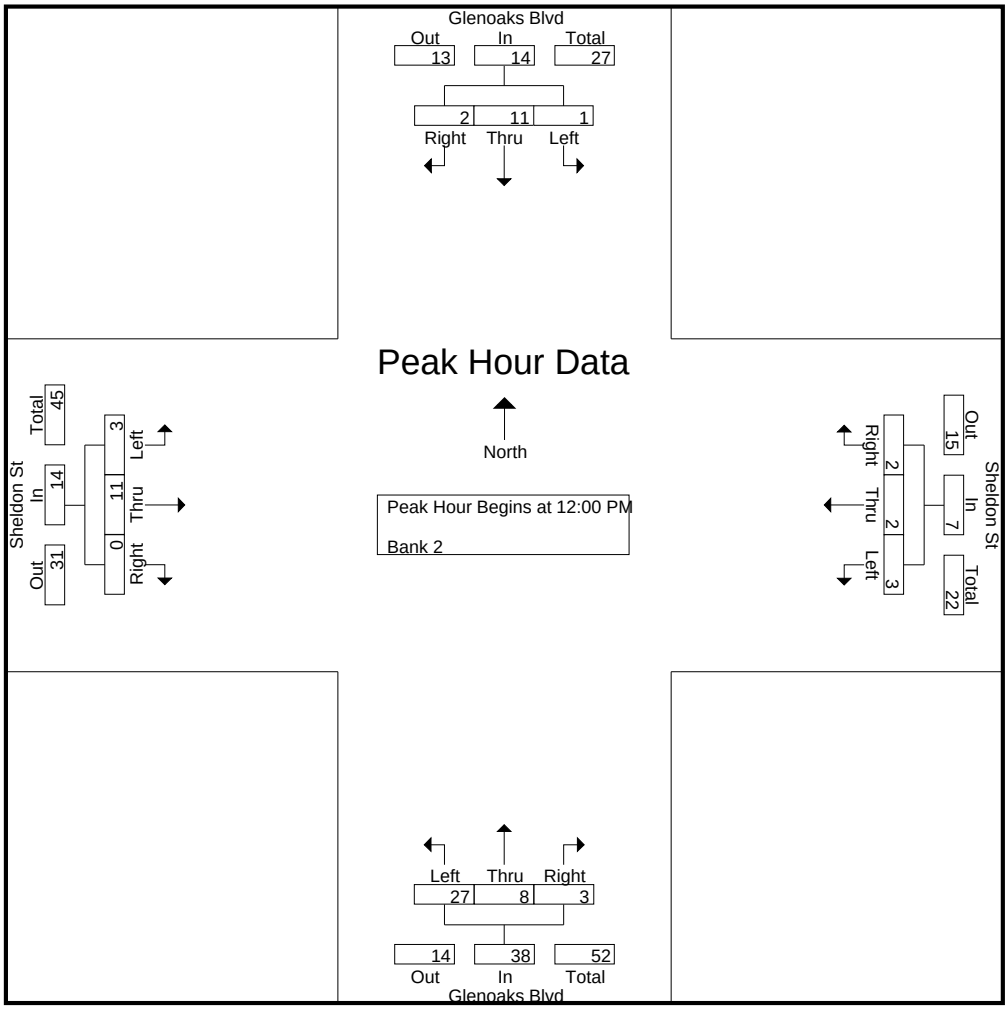

CITY TRAFFIC COUNTERS

626.991.7522

www.ctcounters.com

File Name : GlenOaksSheldon_3Axle
Site Code : 00000000
Start Date : 1/15/2014
Page No : 4

	Glenoaks Blvd Southbound				Sheldon St Westbound				Glenoaks Blvd Northbound				Sheldon St Eastbound				
Start Time	Left	Thru	Right	App. Total	Left	Thru	Right	App. Total	Left	Thru	Right	App. Total	Left	Thru	Right	App. Total	Int. Total
Peak Hour Analysis From 02:00 PM to 05:45 PM - Peak 1 of 1																	
Peak Hour for Entire Intersection Begins at 03:00 PM																	
03:00 PM	0	**3**	**2**	**5**	1	0	**1**	2	3	2	**3**	8	0	**1**	**7**	**8**	23
03:15 PM	0	2	1	3	0	0	0	0	2	2	0	4	1	0	4	5	12
03:30 PM	0	2	0	2	**5**	0	0	**5**	0	5	2	7	1	0	2	3	17
03:45 PM	**2**	2	0	4	1	0	0	1	**16**	**8**	0	**24**	**2**	1	0	3	**32**
Total Volume	2	9	3	14	7	0	1	8	21	17	5	43	4	2	13	19	84
% App. Total	14.3	64.3	21.4		87.5	0	12.5		48.8	39.5	11.6		21.1	10.5	68.4		
PHF	.250	.750	.375	.700	.350	.000	.250	.400	.328	.531	.417	.448	.500	.500	.464	.594	.656

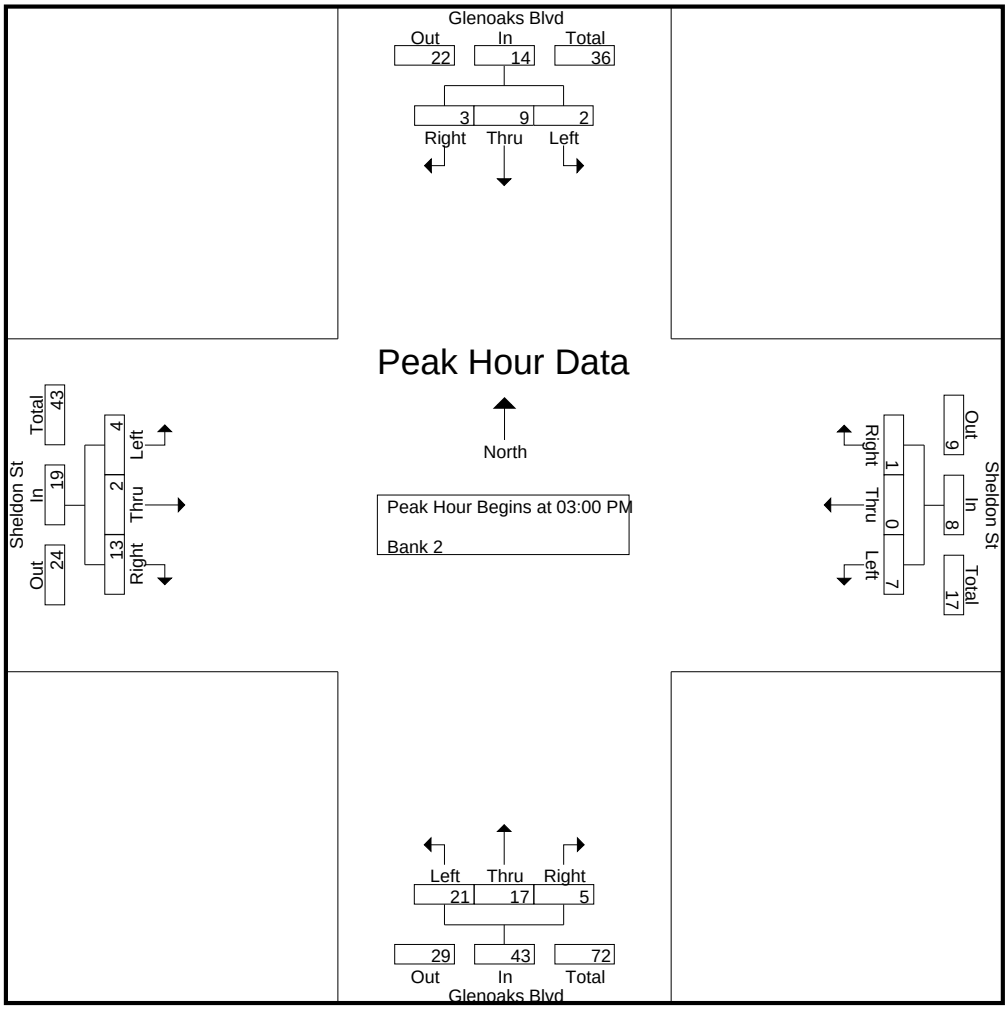

CITY TRAFFIC COUNTERS

626.991.7522

www.ctcounters.com

File Name : GlenOaksSheldon_4Axle
Site Code : 00000000
Start Date : 1/15/2014
Page No : 1

Groups Printed- Bank 2

	Glenoaks Blvd Southbound			Sheldon St Westbound			Glenoaks Blvd Northbound			Sheldon St Eastbound			
Start Time	Left	Thru	Right	Left	Thru	Right	Left	Thru	Right	Left	Thru	Right	Int. Total
07:00 AM	0	1	0	0	0	0	0	0	0	0	0	0	1
07:30 AM	2	0	0	0	0	0	0	0	0	0	0	0	2
Total	2	1	0	0	0	0	0	0	0	0	0	0	3
08:00 AM	1	0	0	0	0	0	0	0	0	0	0	0	1
08:15 AM	0	0	0	0	1	0	0	1	0	1	0	0	3
08:30 AM	1	0	0	0	0	0	0	0	0	0	0	0	1
08:45 AM	1	2	0	0	0	0	1	0	0	0	1	0	5
Total	3	2	0	0	1	0	1	1	0	1	1	0	10
09:00 AM	0	0	0	0	0	0	0	1	0	0	1	1	3
09:15 AM	0	0	0	1	0	0	1	1	0	0	1	0	4
09:30 AM	2	2	0	0	0	0	0	2	1	0	1	0	8
09:45 AM	0	1	0	0	0	0	0	1	0	1	1	1	5
Total	2	3	0	1	0	0	1	5	1	1	4	2	20
12:00 PM	1	1	0	0	0	0	0	0	0	0	1	0	3
12:15 PM	0	0	1	0	0	0	0	0	0	0	0	0	1
12:30 PM	0	0	0	0	0	0	0	1	0	0	1	1	3
12:45 PM	0	0	0	0	0	0	0	1	0	0	2	0	3
Total	1	1	1	0	0	0	0	2	0	0	4	1	10
01:00 PM	0	0	0	0	0	0	1	1	0	1	1	0	4
01:15 PM	0	0	0	0	0	0	1	1	0	0	1	0	3
01:30 PM	0	0	0	0	0	0	0	1	1	0	1	0	3
Total	0	0	0	0	0	0	2	3	1	1	3	0	10
03:00 PM	0	0	0	0	0	0	1	0	0	0	1	0	2
03:15 PM	0	0	0	0	0	0	0	0	0	0	1	2	3
03:30 PM	0	0	0	0	0	0	0	0	1	0	0	0	1
03:45 PM	0	0	1	0	0	0	0	1	0	0	0	0	2
Total	0	0	1	0	0	0	1	1	1	0	2	2	8
04:00 PM	0	0	0	0	0	0	0	0	0	0	1	0	1
04:15 PM	0	0	0	0	0	0	0	0	1	0	0	0	1
Total	0	0	0	0	0	0	0	0	1	0	1	0	2
05:00 PM	0	0	0	0	0	0	0	0	0	0	1	0	1
05:30 PM	0	1	0	0	0	0	0	0	0	0	0	0	1
Total	0	1	0	0	0	0	0	0	0	0	1	0	2
Grand Total	8	8	2	1	1	0	5	12	4	3	16	5	65
Apprch %	44.4	44.4	11.1	50	50	0	23.8	57.1	19	12.5	66.7	20.8	
Total %	12.3	12.3	3.1	1.5	1.5	0	7.7	18.5	6.2	4.6	24.6	7.7	

CITY TRAFFIC COUNTERS

626.991.7522

www.ctcounters.com

File Name : GlenOaksSheldon_4Axle
Site Code : 00000000
Start Date : 1/15/2014
Page No : 2

	Glenoaks Blvd Southbound				Sheldon St Westbound				Glenoaks Blvd Northbound				Sheldon St Eastbound				
Start Time	Left	Thru	Right	App. Total	Left	Thru	Right	App. Total	Left	Thru	Right	App. Total	Left	Thru	Right	App. Total	Int. Total
Peak Hour Analysis From 07:00 AM to 09:45 AM - Peak 1 of 1																	
Peak Hour for Entire Intersection Begins at 08:45 AM																	
08:45 AM	1	**2**	0	3	0	0	0	0	**1**	0	0	1	0	**1**	0	1	5
09:00 AM	0	0	0	0	0	0	0	0	0	1	0	1	0	1	**1**	**2**	3
09:15 AM	0	0	0	0	**1**	0	0	**1**	1	1	0	2	0	1	0	1	4
09:30 AM	**2**	2	0	**4**	0	0	0	0	0	**2**	**1**	**3**	0	1	0	1	**8**
Total Volume	3	4	0	7	1	0	0	1	2	4	1	7	0	4	1	5	20
% App. Total	42.9	57.1	0		100	0	0		28.6	57.1	14.3		0	80	20		
PHF	.375	.500	.000	.438	.250	.000	.000	.250	.500	.500	.250	.583	.000	1.00	.250	.625	.625

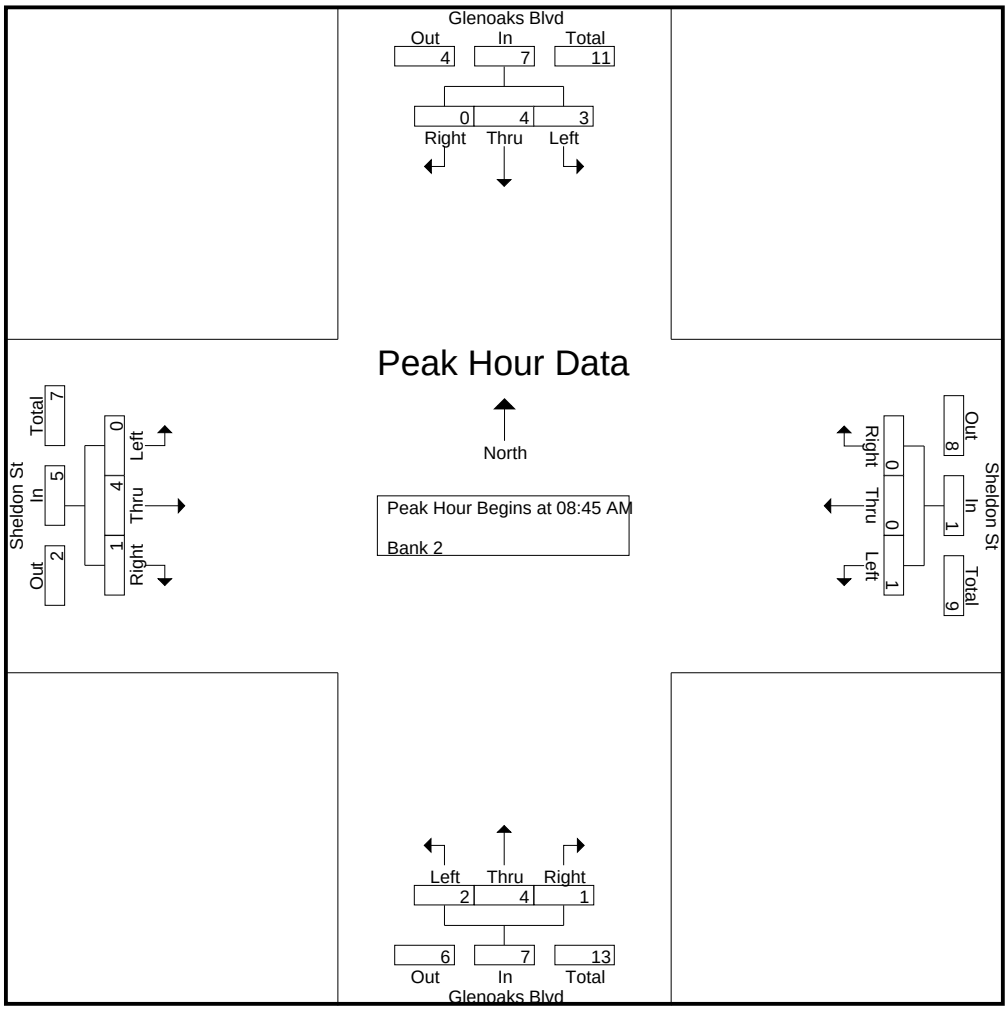

CITY TRAFFIC COUNTERS

626.991.7522

www.ctcounters.com

File Name : GlenOaksSheldon_4Axle
Site Code : 00000000
Start Date : 1/15/2014
Page No : 3

	Glenoaks Blvd Southbound				Sheldon St Westbound				Glenoaks Blvd Northbound				Sheldon St Eastbound				
Start Time	Left	Thru	Right	App. Total	Left	Thru	Right	App. Total	Left	Thru	Right	App. Total	Left	Thru	Right	App. Total	Int. Total
Peak Hour Analysis From 10:00 AM to 01:45 PM - Peak 1 of 1																	
Peak Hour for Entire Intersection Begins at 12:30 PM																	
12:30 PM	0	0	0	0	0	0	0	0	0	**1**	0	1	0	1	**1**	**2**	3
12:45 PM	0	0	0	0	0	0	0	0	0	1	0	1	0	**2**	0	2	3
01:00 PM	0	0	0	0	0	0	0	0	**1**	1	0	**2**	**1**	1	0	2	**4**
01:15 PM	0	0	0	0	0	0	0	0	1	1	0	2	0	1	0	1	3
Total Volume	0	0	0	0	0	0	0	0	2	4	0	6	1	5	1	7	13
% App. Total	0	0	0		0	0	0		33.3	66.7	0		14.3	71.4	14.3		
PHF	.000	.000	.000	.000	.000	.000	.000	.000	.500	1.00	.000	.750	.250	.625	.250	.875	.813

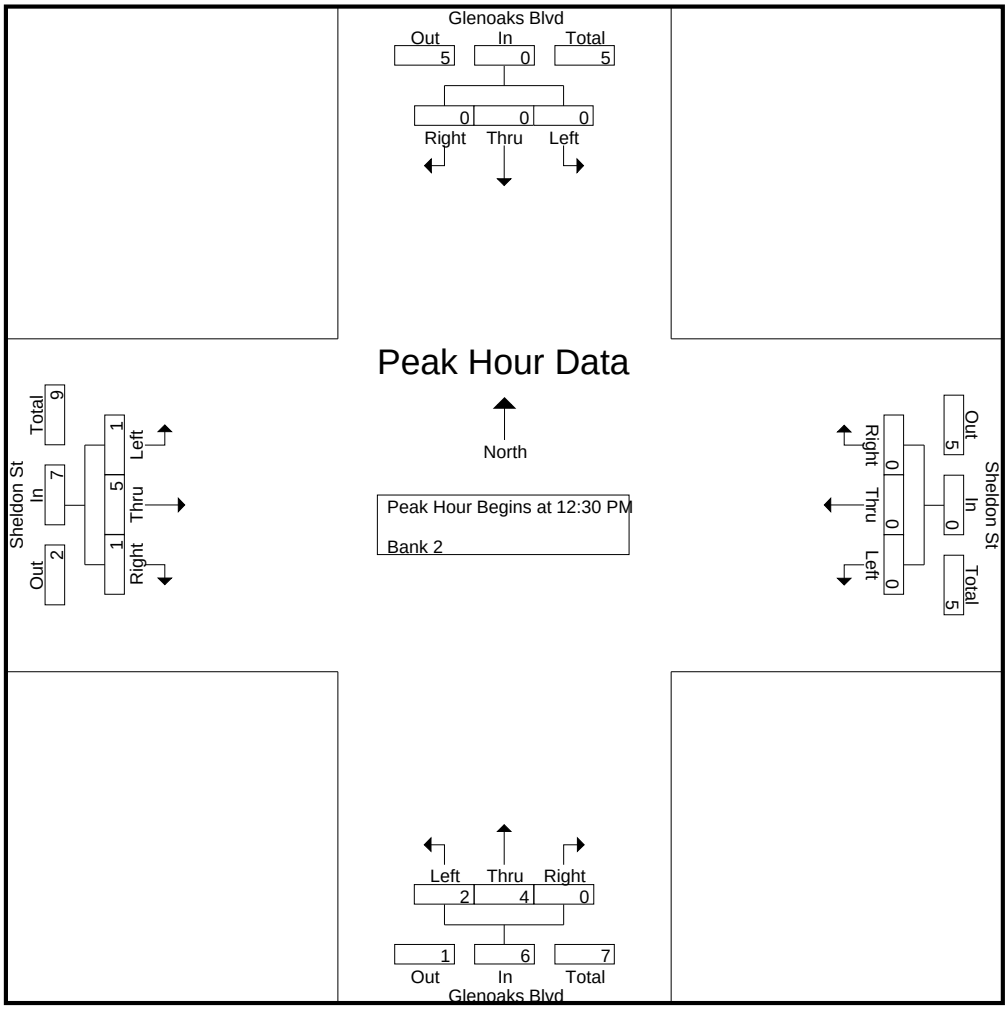

CITY TRAFFIC COUNTERS

626.991.7522

www.ctcounters.com

File Name : GlenOaksSheldon_4Axle
Site Code : 00000000
Start Date : 1/15/2014
Page No : 4

	Glenoaks Blvd Southbound				Sheldon St Westbound				Glenoaks Blvd Northbound				Sheldon St Eastbound				
Start Time	Left	Thru	Right	App. Total	Left	Thru	Right	App. Total	Left	Thru	Right	App. Total	Left	Thru	Right	App. Total	Int. Total
Peak Hour Analysis From 02:00 PM to 05:45 PM - Peak 1 of 1																	
Peak Hour for Entire Intersection Begins at 03:00 PM																	
03:00 PM	0	0	0	0	0	0	0	0	**1**	0	0	**1**	0	**1**	0	1	2
03:15 PM	0	0	0	0	0	0	0	0	0	0	0	0	0	1	**2**	**3**	**3**
03:30 PM	0	0	0	0	0	0	0	0	0	0	**1**	1	0	0	0	0	1
03:45 PM	0	0	**1**	**1**	0	0	0	0	0	**1**	0	1	0	0	0	0	2
Total Volume	0	0	1	1	0	0	0	0	1	1	1	3	0	2	2	4	8
% App. Total	0	0	100		0	0	0		33.3	33.3	33.3		0	50	50		
PHF	.000	.000	.250	.250	.000	.000	.000	.000	.250	.250	.250	.750	.000	.500	.250	.333	.667

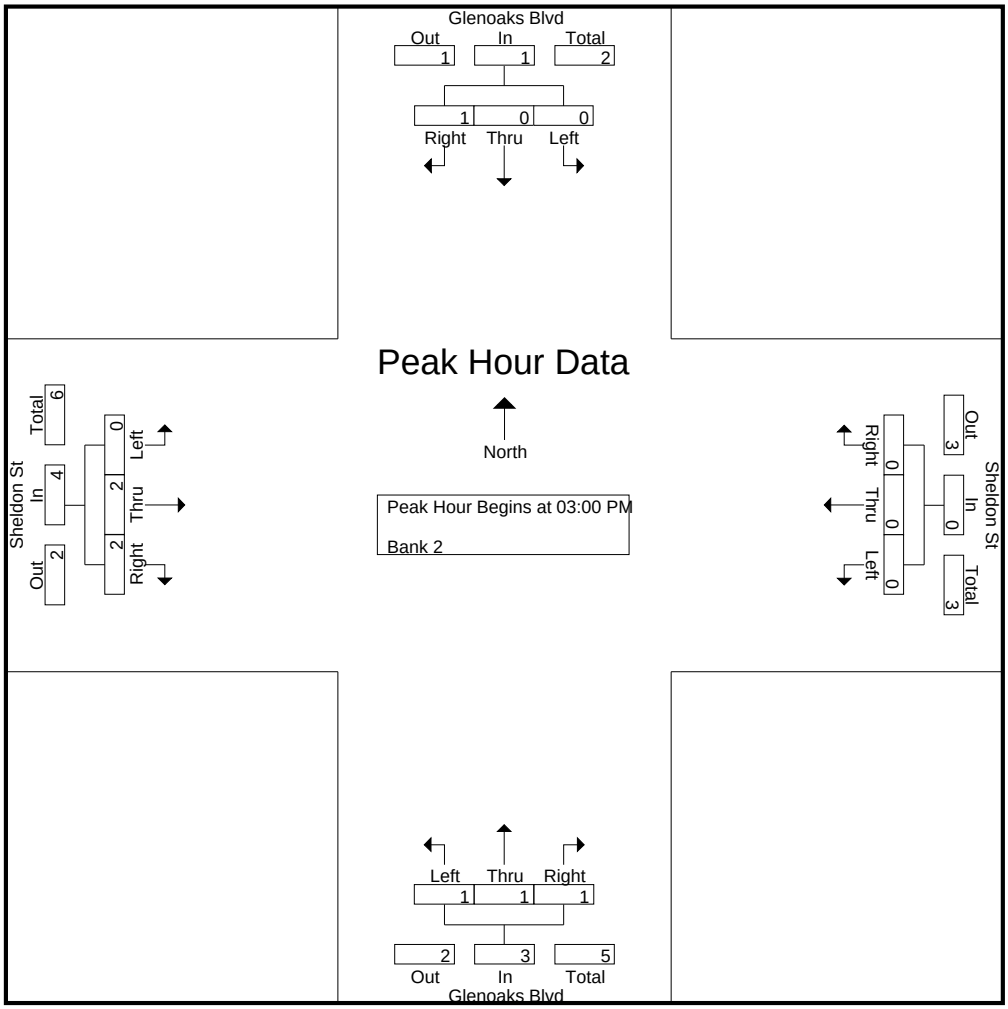

CITY TRAFFIC COUNTERS

626.991.7522

www.ctcounters.com

File Name : GlenOaksSheldon_5Axle
Site Code : 00000000
Start Date : 1/15/2014
Page No : 1

Groups Printed- Bank 2

	Glenoaks Blvd Southbound			Sheldon St Westbound			Glenoaks Blvd Northbound			Sheldon St Eastbound			
Start Time	Left	Thru	Right	Left	Thru	Right	Left	Thru	Right	Left	Thru	Right	Int. Total
07:00 AM	0	3	1	1	2	0	1	0	0	1	3	0	12
07:15 AM	0	5	1	0	0	0	1	0	1	0	3	0	11
07:30 AM	0	5	1	0	0	0	4	3	0	0	0	1	14
07:45 AM	1	6	2	0	0	0	1	2	0	2	0	0	14
Total	1	19	5	1	2	0	7	5	1	3	6	1	51
08:00 AM	2	8	0	0	1	0	0	0	2	1	0	0	14
08:15 AM	0	6	0	0	1	0	1	1	1	0	0	0	10
08:30 AM	1	7	0	1	0	0	2	2	1	5	2	0	21
08:45 AM	2	7	0	0	1	0	2	2	1	1	2	0	18
Total	5	28	0	1	3	0	5	5	5	7	4	0	63
09:00 AM	0	4	0	0	0	0	2	0	0	1	2	0	9
09:15 AM	0	6	0	0	0	0	5	1	0	0	0	0	12
09:30 AM	2	4	1	0	0	0	4	2	1	1	1	0	16
09:45 AM	1	2	0	0	1	0	3	1	0	2	1	1	12
Total	3	16	1	0	1	0	14	4	1	4	4	1	49
12:00 PM	1	2	0	0	0	0	3	4	2	2	2	0	16
12:15 PM	0	3	0	0	1	0	3	3	1	2	3	0	16
12:30 PM	2	0	0	0	0	0	16	4	0	0	3	0	25
12:45 PM	1	3	0	0	0	0	0	1	1	0	1	0	7
Total	4	8	0	0	1	0	22	12	4	4	9	0	64
01:00 PM	1	1	0	0	0	0	0	2	1	1	0	0	6
01:15 PM	0	1	0	0	0	0	3	4	2	1	1	0	12
01:30 PM	0	3	0	0	0	0	0	2	0	1	0	0	6
01:45 PM	0	1	0	1	1	0	0	1	0	1	1	0	6
Total	1	6	0	1	1	0	3	9	3	4	2	0	30
03:00 PM	0	3	1	0	0	0	0	4	0	1	0	0	9
03:15 PM	0	1	0	0	0	0	2	3	1	1	0	2	10
03:30 PM	1	2	0	0	0	0	2	4	0	1	1	0	11
03:45 PM	0	1	0	0	0	0	1	2	1	1	0	0	6
Total	1	7	1	0	0	0	5	13	2	4	1	2	36
04:00 PM	0	2	1	0	0	0	1	1	0	0	0	0	5
04:15 PM	0	0	1	0	0	0	1	1	0	0	0	1	4
04:30 PM	0	0	0	0	0	0	0	3	0	0	0	1	4
04:45 PM	0	0	0	0	0	0	0	1	0	0	0	0	1
Total	0	2	2	0	0	0	2	6	0	0	0	2	14
05:00 PM	0	1	0	0	0	0	0	2	0	0	0	0	3
05:15 PM	0	1	0	0	0	0	0	0	0	0	2	0	3
05:45 PM	0	5	0	0	0	0	0	1	0	0	0	0	6
Total	0	7	0	0	0	0	0	3	0	0	2	0	12
Grand Total	15	93	9	3	8	0	58	57	16	26	28	6	319
Apprch %	12.8	79.5	7.7	27.3	72.7	0	44.3	43.5	12.2	43.3	46.7	10	
Total %	4.7	29.2	2.8	0.9	2.5	0	18.2	17.9	5	8.2	8.8	1.9	

CITY TRAFFIC COUNTERS

626.991.7522

www.ctcounters.com

File Name : GlenOaksSheldon_5Axle
Site Code : 00000000
Start Date : 1/15/2014
Page No : 2

	Glenoaks Blvd Southbound				Sheldon St Westbound				Glenoaks Blvd Northbound				Sheldon St Eastbound				
Start Time	Left	Thru	Right	App. Total	Left	Thru	Right	App. Total	Left	Thru	Right	App. Total	Left	Thru	Right	App. Total	Int. Total
Peak Hour Analysis From 07:00 AM to 09:45 AM - Peak 1 of 1																	
Peak Hour for Entire Intersection Begins at 08:00 AM																	
08:00 AM	**2**	**8**	0	**10**	0	**1**	0	**1**	0	0	**2**	2	1	0	0	1	14
08:15 AM	0	6	0	6	0	1	0	1	1	1	1	3	0	0	0	0	10
08:30 AM	1	7	0	8	**1**	0	0	1	**2**	**2**	1	**5**	**5**	**2**	0	**7**	**21**
08:45 AM	2	7	0	9	0	1	0	1	2	2	1	5	1	2	0	3	18
Total Volume	5	28	0	33	1	3	0	4	5	5	5	15	7	4	0	11	63
% App. Total	15.2	84.8	0		25	75	0		33.3	33.3	33.3		63.6	36.4	0		
PHF	.625	.875	.000	.825	.250	.750	.000	1.00	.625	.625	.625	.750	.350	.500	.000	.393	.750

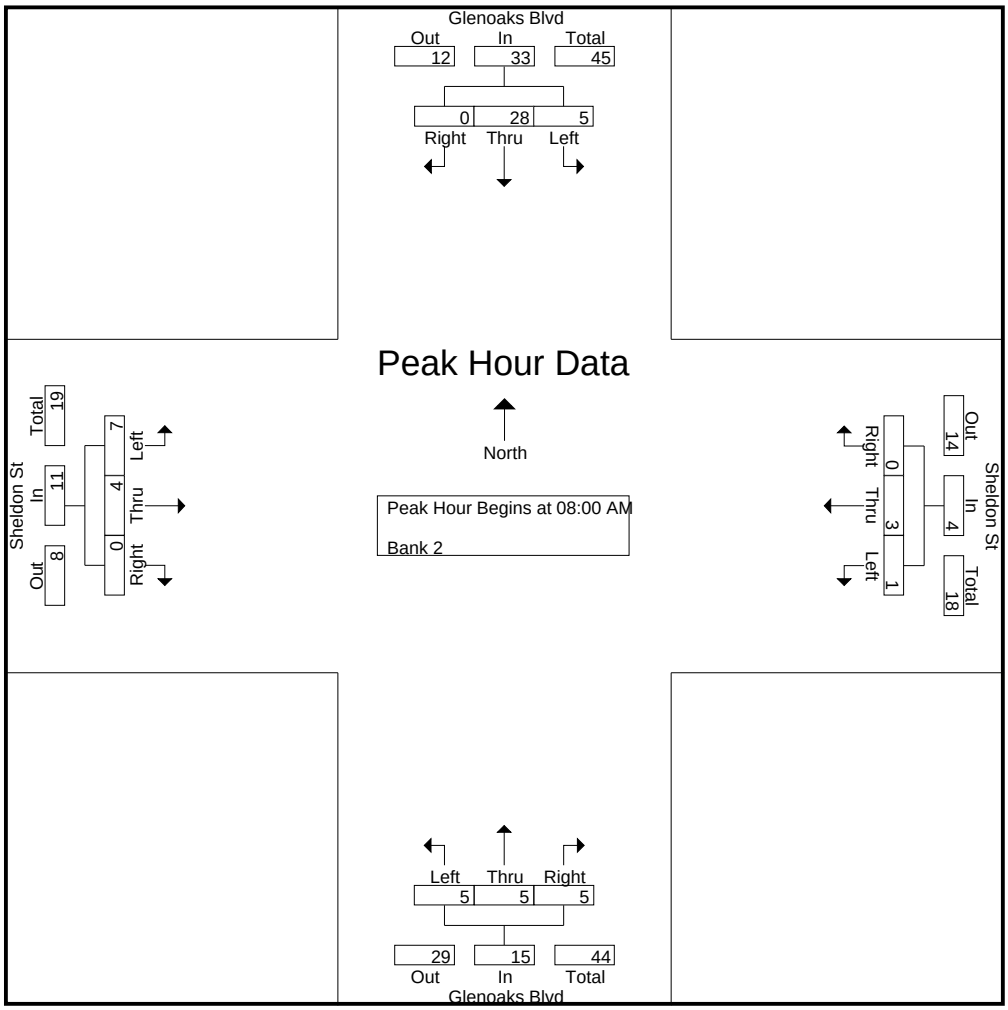

CITY TRAFFIC COUNTERS

626.991.7522

www.ctcounters.com

File Name : GlenOaksSheldon_5Axle
Site Code : 00000000
Start Date : 1/15/2014
Page No : 3

	Glenoaks Blvd Southbound				Sheldon St Westbound				Glenoaks Blvd Northbound				Sheldon St Eastbound				
Start Time	Left	Thru	Right	App. Total	Left	Thru	Right	App. Total	Left	Thru	Right	App. Total	Left	Thru	Right	App. Total	Int. Total
Peak Hour Analysis From 10:00 AM to 01:45 PM - Peak 1 of 1																	
Peak Hour for Entire Intersection Begins at 12:00 PM																	
12:00 PM	1	2	0	3	0	0	0	0	3	**4**	**2**	9	**2**	2	0	4	16
12:15 PM	0	**3**	0	3	0	**1**	0	**1**	3	3	1	7	2	**3**	0	**5**	16
12:30 PM	**2**	0	0	2	0	0	0	0	**16**	4	0	**20**	0	3	0	3	**25**
12:45 PM	1	3	0	**4**	0	0	0	0	0	1	1	2	0	1	0	1	7
Total Volume	4	8	0	12	0	1	0	1	22	12	4	38	4	9	0	13	64
% App. Total	33.3	66.7	0		0	100	0		57.9	31.6	10.5		30.8	69.2	0		
PHF	.500	.667	.000	.750	.000	.250	.000	.250	.344	.750	.500	.475	.500	.750	.000	.650	.640

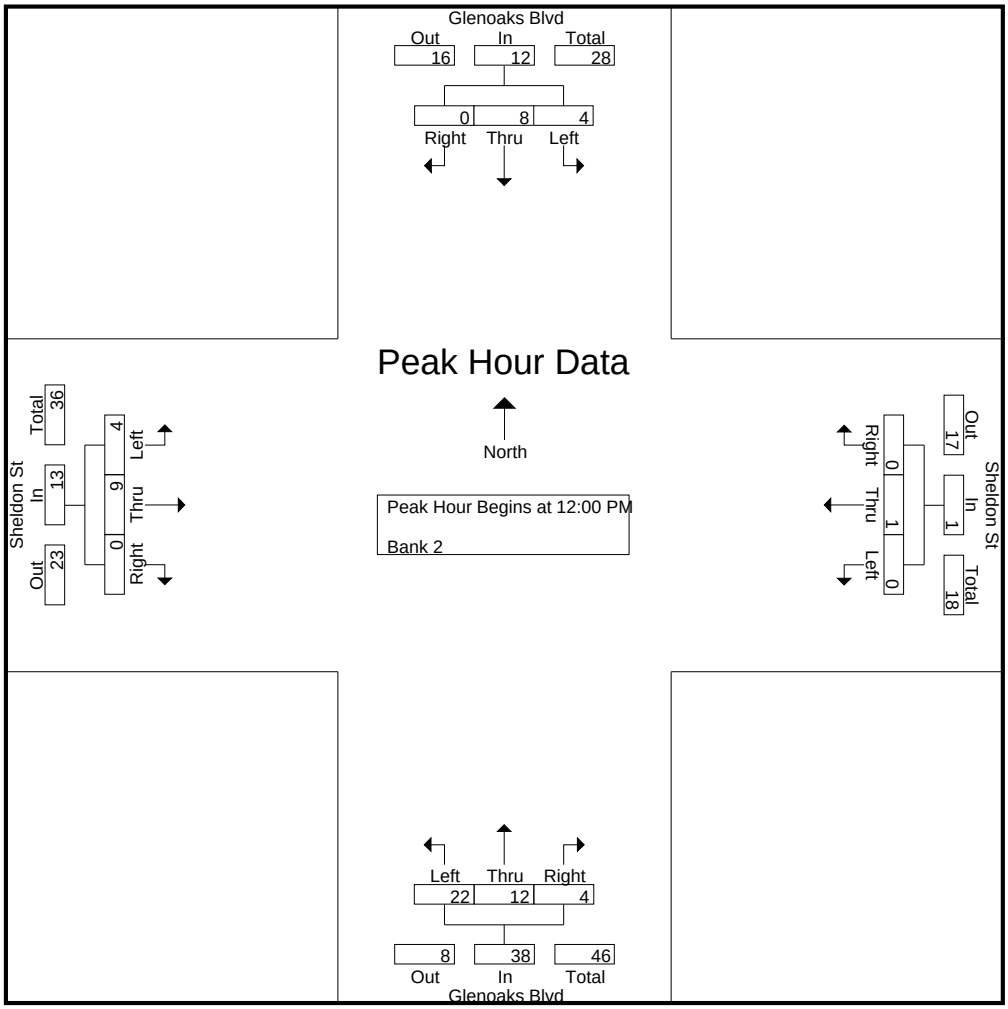

CITY TRAFFIC COUNTERS

626.991.7522

www.ctcounters.com

File Name : GlenOaksSheldon_5Axle
Site Code : 00000000
Start Date : 1/15/2014
Page No : 4

	Glenoaks Blvd Southbound				Sheldon St Westbound				Glenoaks Blvd Northbound				Sheldon St Eastbound				
Start Time	Left	Thru	Right	App. Total	Left	Thru	Right	App. Total	Left	Thru	Right	App. Total	Left	Thru	Right	App. Total	Int. Total
Peak Hour Analysis From 02:00 PM to 05:45 PM - Peak 1 of 1																	
Peak Hour for Entire Intersection Begins at 03:00 PM																	
03:00 PM	0	**3**	**1**	**4**	0	0	0	0	0	**4**	0	4	**1**	0	0	1	9
03:15 PM	0	1	0	1	0	0	0	0	**2**	3	**1**	**6**	1	0	**2**	**3**	10
03:30 PM	**1**	2	0	3	0	0	0	0	2	4	0	6	1	**1**	0	2	**11**
03:45 PM	0	1	0	1	0	0	0	0	1	2	1	4	1	0	0	1	6
Total Volume	1	7	1	9	0	0	0	0	5	13	2	20	4	1	2	7	36
% App. Total	11.1	77.8	11.1		0	0	0		25	65	10		57.1	14.3	28.6		
PHF	.250	.583	.250	.563	.000	.000	.000	.000	.625	.813	.500	.833	1.00	.250	.250	.583	.818

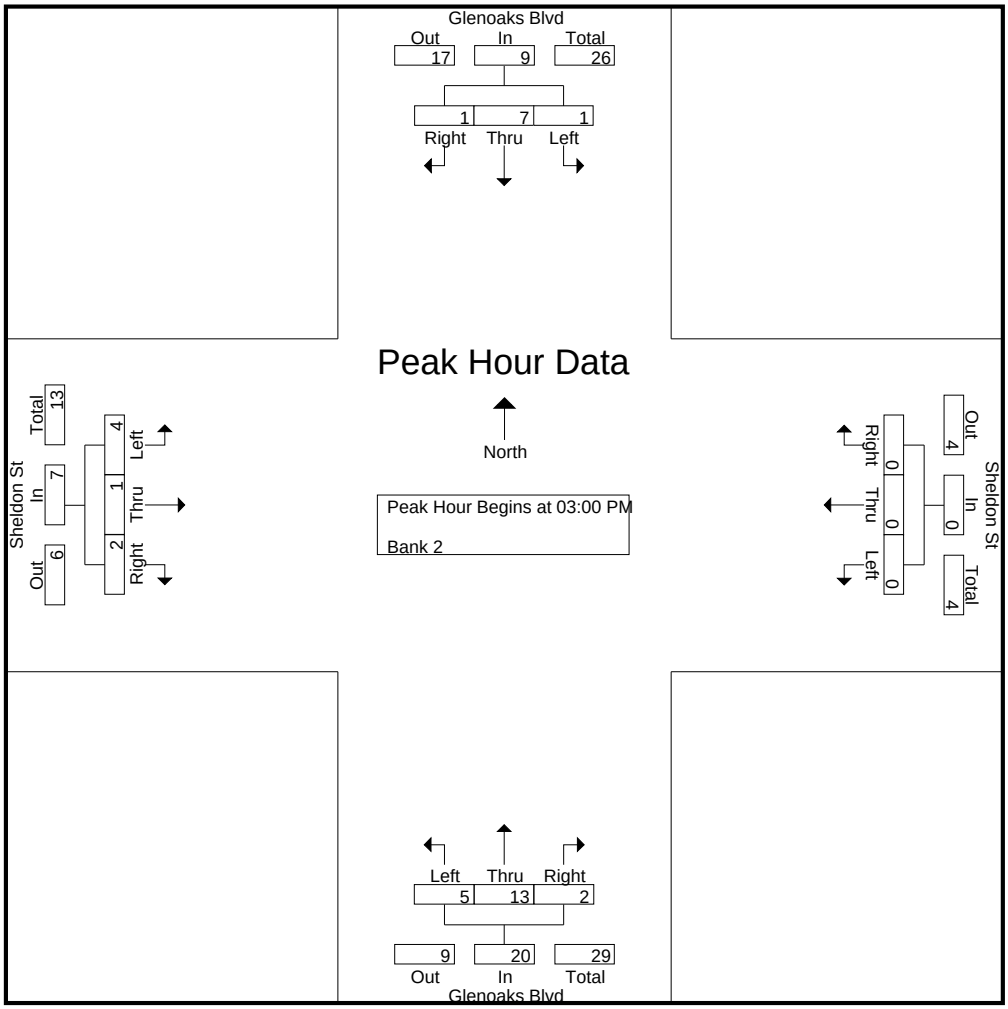

CITY TRAFFIC COUNTERS

626.991.7522

www.ctcounters.com

File Name : Paxton_LaurelCanyon
Site Code : 00000000
Start Date : 3/26/2015
Page No : 1

Groups Printed- Unshifted

	Laurel Cyn Blvd Southbound			Paxton St Westbound			Laurel Cyn Blvd Northbound			Paxton St Eastbound			
Start Time	Left	Thru	Right	Left	Thru	Right	Left	Thru	Right	Left	Thru	Right	Int. Total
07:00 AM	18	234	29	24	69	27	12	151	23	18	82	16	703
07:15 AM	27	269	44	17	92	22	9	185	29	18	90	10	812
07:30 AM	27	309	69	15	89	58	8	279	28	13	134	5	1034
07:45 AM	32	314	68	22	124	62	18	299	32	19	197	6	1193
Total	104	1126	210	78	374	169	47	914	112	68	503	37	3742
08:00 AM	30	353	70	23	91	43	9	176	35	21	83	9	943
08:15 AM	36	235	71	27	85	33	21	147	19	22	119	6	821
08:30 AM	21	188	37	26	65	27	23	105	32	20	102	16	662
08:45 AM	29	226	32	18	59	25	11	131	28	14	84	14	671
Total	116	1002	210	94	300	128	64	559	114	77	388	45	3097
09:00 AM	12	117	21	18	59	9	16	94	27	18	56	8	455
09:15 AM	21	110	19	18	54	14	12	92	25	15	61	8	449
09:30 AM	15	150	24	9	38	23	12	86	15	8	66	11	457
09:45 AM	19	178	33	21	47	11	8	94	17	18	80	8	534
Total	67	555	97	66	198	57	48	366	84	59	263	35	1895
12:00 PM	42	105	11	32	54	24	12	115	25	13	45	8	486
12:15 PM	37	137	10	26	66	19	19	94	32	26	60	9	535
12:30 PM	40	139	15	22	58	30	21	133	25	20	61	5	569
12:45 PM	41	125	14	14	43	32	21	128	19	25	80	6	548
Total	160	506	50	94	221	105	73	470	101	84	246	28	2138
01:00 PM	33	102	21	15	62	20	8	115	23	23	80	11	513
01:15 PM	30	110	15	20	54	19	24	118	32	41	67	7	537
01:30 PM	43	98	20	28	64	26	14	115	27	30	59	12	536
01:45 PM	34	130	22	21	67	26	27	116	17	26	68	10	564
Total	140	440	78	84	247	91	73	464	99	120	274	40	2150
03:00 PM	36	158	35	35	107	41	16	203	25	18	103	23	800
03:15 PM	47	255	52	21	92	29	30	198	28	30	128	19	929
03:30 PM	42	206	48	24	107	19	23	156	25	24	113	14	801
03:45 PM	42	178	42	32	124	23	25	197	31	25	94	24	837
Total	167	797	177	112	430	112	94	754	109	97	438	80	3367
04:00 PM	38	181	51	29	104	24	38	185	30	16	123	23	842
04:15 PM	36	206	48	28	116	14	34	213	28	24	125	14	886
04:30 PM	24	212	45	28	169	18	29	170	38	24	112	25	894
04:45 PM	40	288	78	22	128	22	26	221	31	27	137	25	1045
Total	138	887	222	107	517	78	127	789	127	91	497	87	3667
05:00 PM	36	296	85	19	106	17	32	272	26	25	155	29	1098
05:15 PM	54	290	36	20	136	22	27	272	33	23	150	30	1093
05:30 PM	42	195	43	28	114	28	42	315	40	15	151	33	1046
05:45 PM	37	204	47	25	159	30	44	313	49	24	152	22	1106
Total	169	985	211	92	515	97	145	1172	148	87	608	114	4343
Grand Total	1061	6298	1255	727	2802	837	671	5488	894	683	3217	466	24399
Apprch %	12.3	73.1	14.6	16.7	64.2	19.2	9.5	77.8	12.7	15.6	73.7	10.7	
Total %	4.3	25.8	5.1	3	11.5	3.4	2.8	22.5	3.7	2.8	13.2	1.9	

CITY TRAFFIC COUNTERS

626.991.7522

www.ctcounters.com

File Name : Paxton_LaurelCanyon
Site Code : 00000000
Start Date : 3/26/2015
Page No : 2

	Laurel Cyn Blvd Southbound				Paxton St Westbound				Laurel Cyn Blvd Northbound				Paxton St Eastbound				
Start Time	Left	Thru	Right	App. Total	Left	Thru	Right	App. Total	Left	Thru	Right	App. Total	Left	Thru	Right	App. Total	Int. Total
Peak Hour Analysis From 07:00 AM to 09:45 AM - Peak 1 of 1																	
Peak Hour for Entire Intersection Begins at 07:30 AM																	
07:30 AM	27	309	69	405	15	89	58	162	8	279	28	315	13	134	5	152	1034
07:45 AM	32	314	68	414	22	**124**	**62**	**208**	18	**299**	32	**349**	19	**197**	6	**222**	**1193**
08:00 AM	30	**353**	70	**453**	23	91	43	157	9	176	**35**	220	21	83	**9**	113	943
08:15 AM	**36**	235	**71**	342	**27**	85	33	145	**21**	147	19	187	**22**	119	6	147	821
Total Volume	125	1211	278	1614	87	389	196	672	56	901	114	1071	75	533	26	634	3991
% App. Total	7.7	75	17.2		12.9	57.9	29.2		5.2	84.1	10.6		11.8	84.1	4.1		
PHF	.868	.858	.979	.891	.806	.784	.790	.808	.667	.753	.814	.767	.852	.676	.722	.714	.836

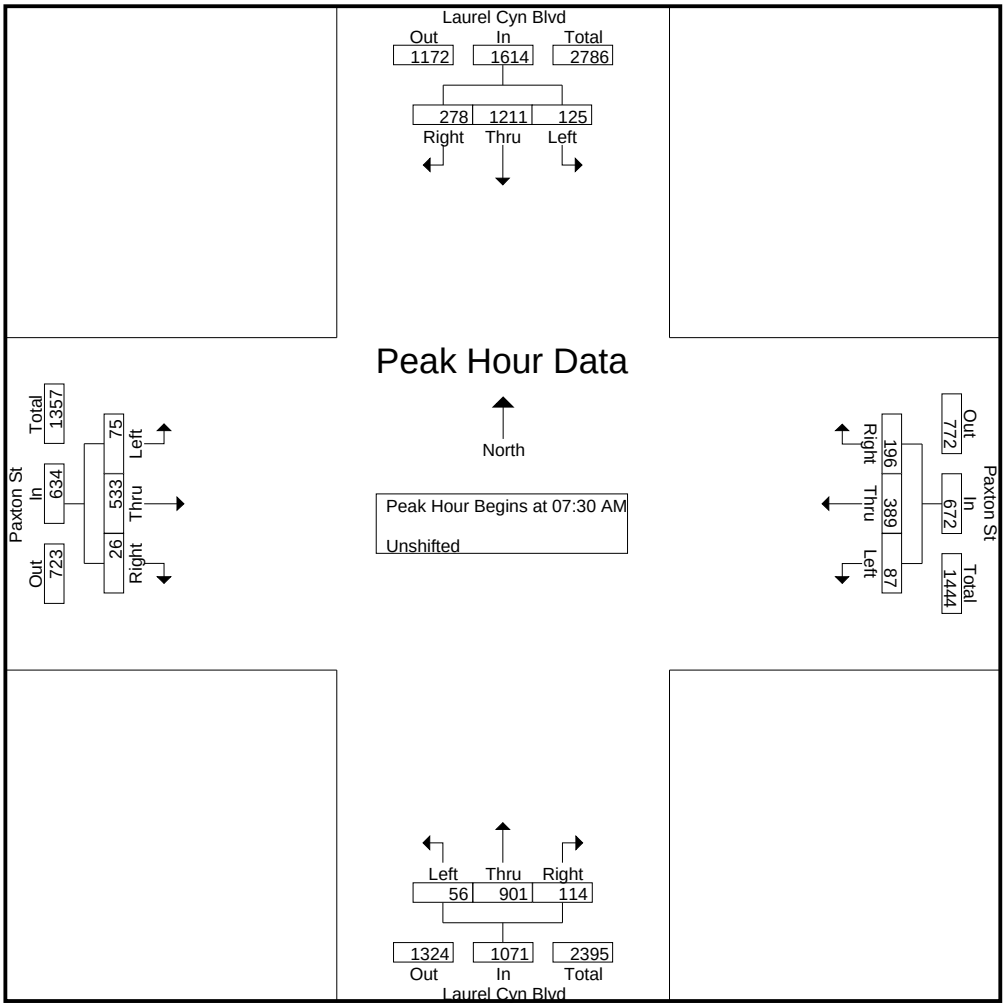

CITY TRAFFIC COUNTERS

626.991.7522

www.ctcounters.com

File Name : Paxton_LaurelCanyon
Site Code : 00000000
Start Date : 3/26/2015
Page No : 3

	Laurel Cyn Blvd Southbound				Paxton St Westbound				Laurel Cyn Blvd Northbound				Paxton St Eastbound				
Start Time	Left	Thru	Right	App. Total	Left	Thru	Right	App. Total	Left	Thru	Right	App. Total	Left	Thru	Right	App. Total	Int. Total
Peak Hour Analysis From 10:00 AM to 01:45 PM - Peak 1 of 1																	
Peak Hour for Entire Intersection Begins at 12:30 PM																	
12:30 PM	40	**139**	15	**194**	**22**	58	30	**110**	21	**133**	25	**179**	20	61	5	86	**569**
12:45 PM	**41**	125	14	180	14	43	**32**	89	21	128	19	168	25	**80**	6	111	548
01:00 PM	33	102	**21**	156	15	**62**	20	97	8	115	23	146	23	80	**11**	114	513
01:15 PM	30	110	15	155	20	54	19	93	**24**	118	**32**	174	**41**	67	7	**115**	537
Total Volume	144	476	65	685	71	217	101	389	74	494	99	667	109	288	29	426	2167
% App. Total	21	69.5	9.5		18.3	55.8	26		11.1	74.1	14.8		25.6	67.6	6.8		
PHF	.878	.856	.774	.883	.807	.875	.789	.884	.771	.929	.773	.932	.665	.900	.659	.926	.952

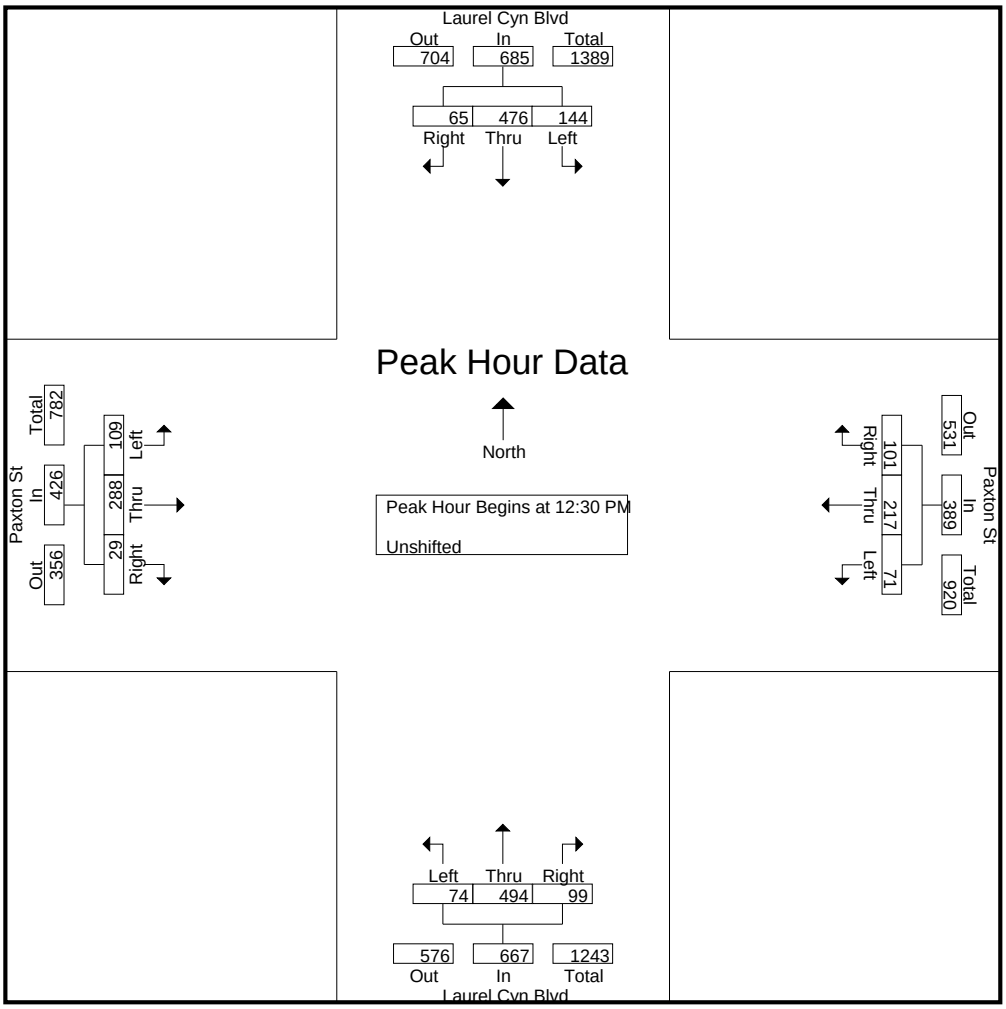

CITY TRAFFIC COUNTERS

626.991.7522

www.ctcounters.com

File Name : Paxton_LaurelCanyon
Site Code : 00000000
Start Date : 3/26/2015
Page No : 4

	Laurel Cyn Blvd Southbound				Paxton St Westbound				Laurel Cyn Blvd Northbound				Paxton St Eastbound				
Start Time	Left	Thru	Right	App. Total	Left	Thru	Right	App. Total	Left	Thru	Right	App. Total	Left	Thru	Right	App. Total	Int. Total
Peak Hour Analysis From 02:00 PM to 05:45 PM - Peak 1 of 1																	
Peak Hour for Entire Intersection Begins at 05:00 PM																	
05:00 PM	36	**296**	**85**	**417**	19	106	17	142	32	272	26	330	**25**	**155**	29	**209**	1098
05:15 PM	**54**	290	36	380	20	136	22	178	27	272	33	332	23	150	30	203	1093
05:30 PM	42	195	43	280	**28**	114	28	170	42	**315**	40	397	15	151	**33**	199	1046
05:45 PM	37	204	47	288	25	**159**	**30**	**214**	**44**	313	**49**	**406**	24	152	22	198	**1106**
Total Volume	169	985	211	1365	92	515	97	704	145	1172	148	1465	87	608	114	809	4343
% App. Total	12.4	72.2	15.5		13.1	73.2	13.8		9.9	80	10.1		10.8	75.2	14.1		
PHF	.782	.832	.621	.818	.821	.810	.808	.822	.824	.930	.755	.902	.870	.981	.864	.968	.982

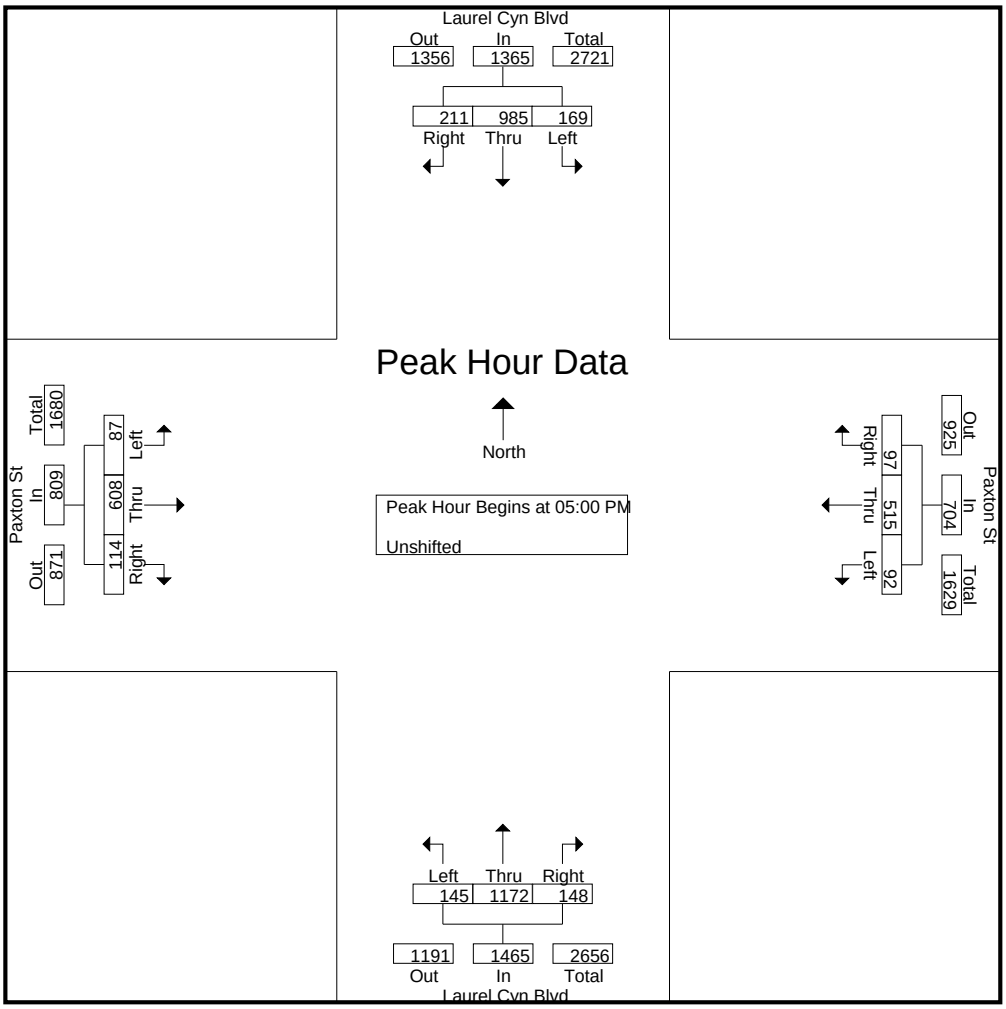

CITY TRAFFIC COUNTERS

626.991.7522

www.ctcounters.com

File Name : Paxton_LaurelCanyon_Motorcycles
Site Code : 00000000
Start Date : 3/26/2015
Page No : 1

Groups Printed- Bank 2

	Laurel Cyn Blvd Southbound			Paxton St Westbound			Laurel Cyn Blvd Northbound			Paxton St Eastbound			
Start Time	Left	Thru	Right	Left	Thru	Right	Left	Thru	Right	Left	Thru	Right	Int. Total
07:00 AM	0	1	0	0	1	0	0	0	0	0	1	0	3
07:30 AM	0	1	0	0	2	0	0	0	0	0	0	0	3
Total	0	2	0	0	3	0	0	0	0	0	1	0	6
08:00 AM	0	0	0	0	0	0	0	1	0	0	1	1	3
08:30 AM	1	1	0	0	0	0	0	0	0	0	0	0	2
08:45 AM	0	0	0	0	0	0	0	1	0	0	0	0	1
Total	1	1	0	0	0	0	0	2	0	0	1	1	6
09:00 AM	0	0	0	0	0	0	0	1	0	0	0	0	1
09:15 AM	0	0	0	0	0	0	0	1	0	0	0	0	1
09:45 AM	0	0	0	1	1	0	0	0	0	1	0	0	3
Total	0	0	0	1	1	0	0	2	0	1	0	0	5
12:30 PM	1	1	0	0	0	0	0	0	0	0	0	0	2
Total	1	1	0	0	0	0	0	0	0	0	0	0	2
01:00 PM	1	0	0	0	0	0	0	0	0	1	1	0	3
01:15 PM	0	1	0	0	0	0	0	0	0	0	0	0	1
01:30 PM	0	1	0	1	0	0	0	2	0	0	0	0	4
01:45 PM	0	0	0	0	0	1	0	0	0	0	0	0	1
Total	1	2	0	1	0	1	0	2	0	1	1	0	9
03:00 PM	0	1	0	0	0	0	0	0	0	0	0	0	1
03:15 PM	0	3	0	0	1	0	0	0	0	0	0	1	5
03:30 PM	0	1	0	0	0	1	0	2	0	0	1	0	5
03:45 PM	2	0	0	0	0	0	0	0	0	0	1	0	3
Total	2	5	0	0	1	1	0	2	0	0	2	1	14
04:00 PM	0	1	0	0	0	0	0	0	0	0	0	0	1
04:15 PM	0	1	0	0	0	0	0	0	0	0	0	0	1
04:30 PM	0	0	0	1	2	1	0	0	0	0	0	0	4
04:45 PM	0	2	0	0	2	0	0	1	0	0	0	0	5
Total	0	4	0	1	4	1	0	1	0	0	0	0	11
05:00 PM	0	1	0	0	1	0	0	0	0	0	0	0	2
05:15 PM	0	0	0	0	1	1	0	1	0	0	2	0	5
05:30 PM	1	0	0	0	0	0	0	0	0	0	1	0	2
05:45 PM	0	0	0	0	0	0	0	1	0	0	1	0	2
Total	1	1	0	0	2	1	0	2	0	0	4	0	11
Grand Total	6	16	0	3	11	4	0	11	0	2	9	2	64
Apprch %	27.3	72.7	0	16.7	61.1	22.2	0	100	0	15.4	69.2	15.4	
Total %	9.4	25	0	4.7	17.2	6.2	0	17.2	0	3.1	14.1	3.1	

CITY TRAFFIC COUNTERS

626.991.7522

www.ctcounters.com

File Name : Paxton_LaurelCanyon_Motorcycles
Site Code : 00000000
Start Date : 3/26/2015
Page No : 2

	Laurel Cyn Blvd Southbound				Paxton St Westbound				Laurel Cyn Blvd Northbound				Paxton St Eastbound				
Start Time	Left	Thru	Right	App. Total	Left	Thru	Right	App. Total	Left	Thru	Right	App. Total	Left	Thru	Right	App. Total	Int. Total
Peak Hour Analysis From 07:00 AM to 09:45 AM - Peak 1 of 1																	
Peak Hour for Entire Intersection Begins at 07:00 AM																	
07:00 AM	0	**1**	0	**1**	0	1	0	1	0	0	0	0	0	**1**	0	**1**	**3**
07:15 AM	0	0	0	0	0	0	0	0	0	0	0	0	0	0	0	0	0
07:30 AM	0	1	0	1	0	**2**	0	**2**	0	0	0	0	0	0	0	0	3
07:45 AM	0	0	0	0	0	0	0	0	0	0	0	0	0	0	0	0	0
Total Volume	0	2	0	2	0	3	0	3	0	0	0	0	0	1	0	1	6
% App. Total	0	100	0		0	100	0		0	0	0		0	100	0		
PHF	.000	.500	.000	.500	.000	.375	.000	.375	.000	.000	.000	.000	.000	.250	.000	.250	.500

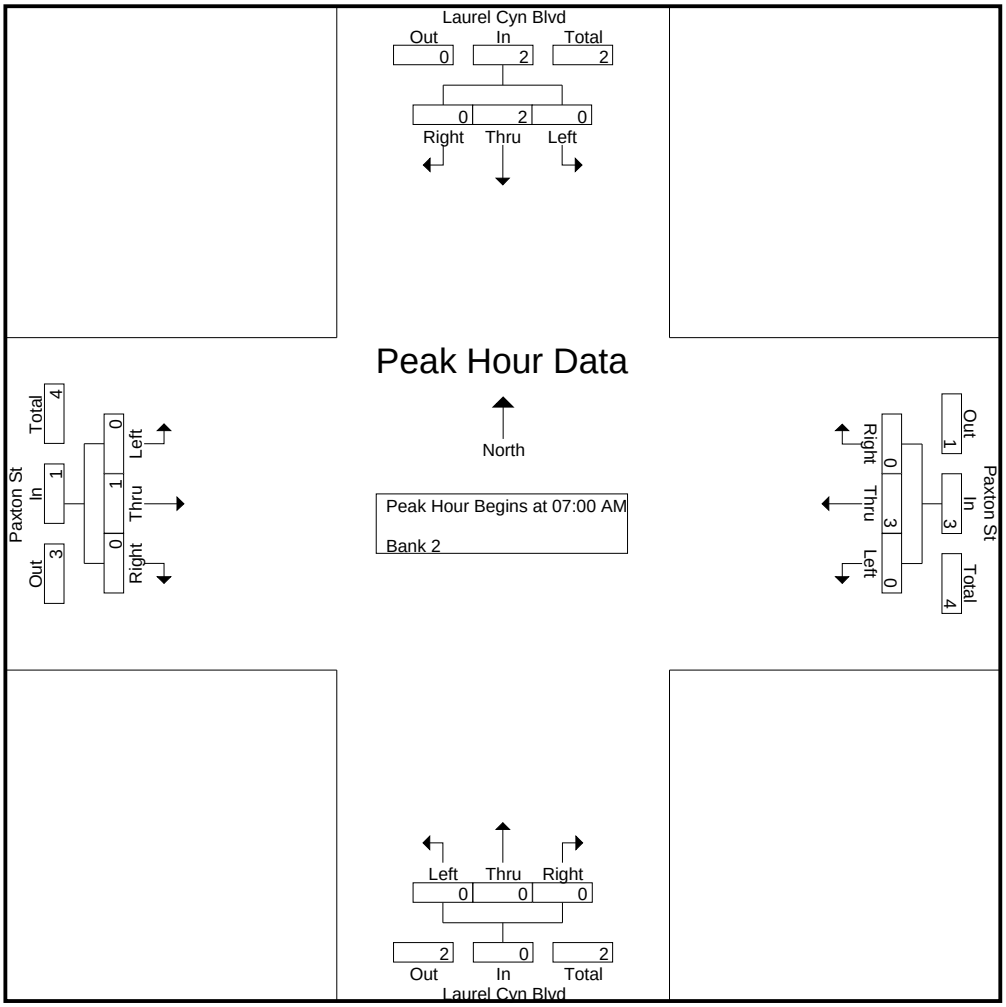

CITY TRAFFIC COUNTERS

626.991.7522

www.ctcounters.com

File Name : Paxton_LaurelCanyon_Motorcycles
Site Code : 00000000
Start Date : 3/26/2015
Page No : 3

	Laurel Cyn Blvd Southbound				Paxton St Westbound				Laurel Cyn Blvd Northbound				Paxton St Eastbound				
Start Time	Left	Thru	Right	App. Total	Left	Thru	Right	App. Total	Left	Thru	Right	App. Total	Left	Thru	Right	App. Total	Int. Total
Peak Hour Analysis From 10:00 AM to 01:45 PM - Peak 1 of 1																	
Peak Hour for Entire Intersection Begins at 01:00 PM																	
01:00 PM	**1**	0	0	**1**	0	0	0	0	0	0	0	0	**1**	**1**	0	**2**	3
01:15 PM	0	**1**	0	1	0	0	0	0	0	0	0	0	0	0	0	0	1
01:30 PM	0	1	0	1	**1**	0	0	**1**	0	**2**	0	**2**	0	0	0	0	**4**
01:45 PM	0	0	0	0	0	0	**1**	1	0	0	0	0	0	0	0	0	1
Total Volume	1	2	0	3	1	0	1	2	0	2	0	2	1	1	0	2	9
% App. Total	33.3	66.7	0		50	0	50		0	100	0		50	50	0		
PHF	.250	.500	.000	.750	.250	.000	.250	.500	.000	.250	.000	.250	.250	.250	.000	.250	.563

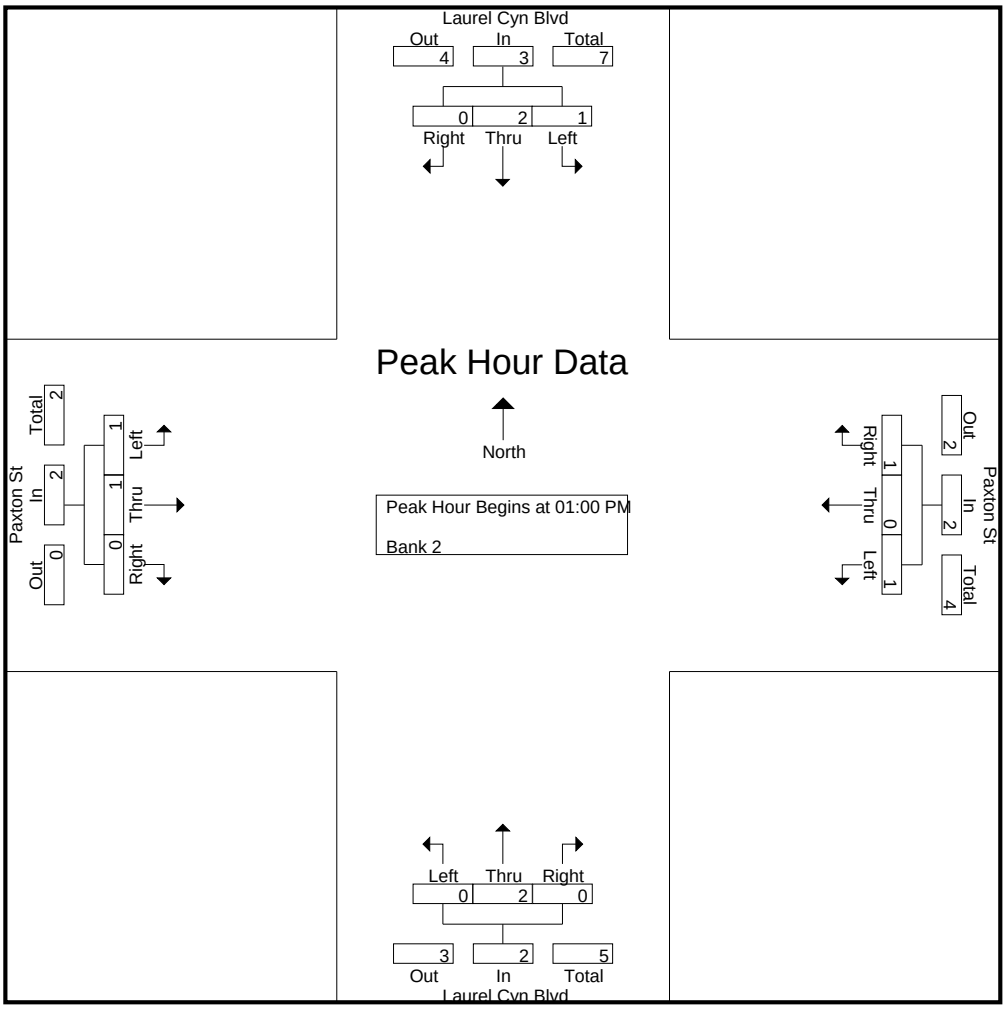

CITY TRAFFIC COUNTERS

626.991.7522

www.ctcounters.com

File Name : Paxton_LaurelCanyon_Motorcycles
Site Code : 00000000
Start Date : 3/26/2015
Page No : 4

	Laurel Cyn Blvd Southbound				Paxton St Westbound				Laurel Cyn Blvd Northbound				Paxton St Eastbound				
Start Time	Left	Thru	Right	App. Total	Left	Thru	Right	App. Total	Left	Thru	Right	App. Total	Left	Thru	Right	App. Total	Int. Total
Peak Hour Analysis From 02:00 PM to 05:45 PM - Peak 1 of 1																	
Peak Hour for Entire Intersection Begins at 04:30 PM																	
04:30 PM	0	0	0	0	**1**	**2**	**1**	**4**	0	0	0	0	0	0	0	0	4
04:45 PM	0	**2**	0	**2**	0	2	0	2	0	**1**	0	**1**	0	0	0	0	**5**
05:00 PM	0	1	0	1	0	1	0	1	0	0	0	0	0	0	0	0	2
05:15 PM	0	0	0	0	0	1	1	2	0	1	0	1	0	**2**	0	**2**	5
Total Volume	0	3	0	3	1	6	2	9	0	2	0	2	0	2	0	2	16
% App. Total	0	100	0		11.1	66.7	22.2		0	100	0		0	100	0		
PHF	.000	.375	.000	.375	.250	.750	.500	.563	.000	.500	.000	.500	.000	.250	.000	.250	.800

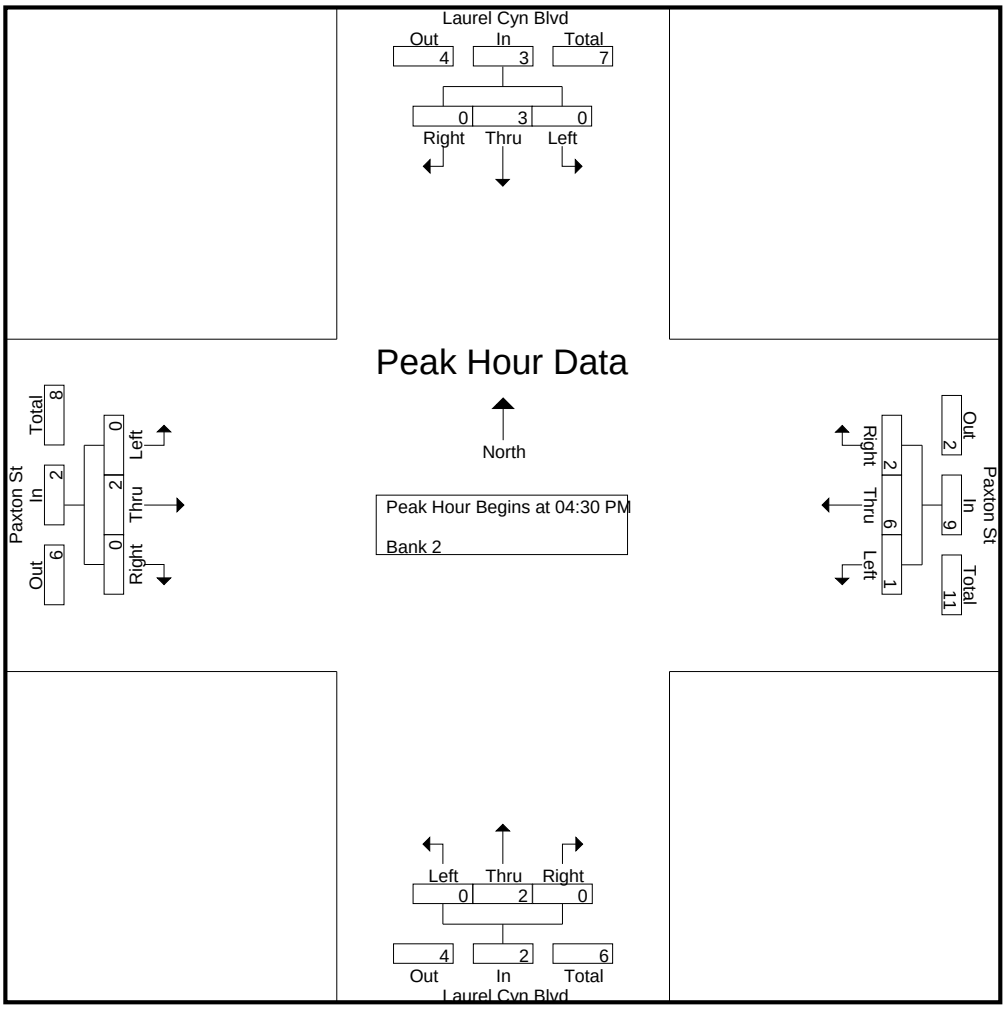

CITY TRAFFIC COUNTERS

626.991.7522

www.ctcounters.com

File Name : paxton_laurelcanyon_buses
Site Code : 00000000
Start Date : 3/26/2015
Page No : 1

Groups Printed- Bank 1

	Laurel Cyn Blvd Southbound			Paxton St Westbound			Laurel Cyn Blvd Northbound			Paxton St Eastbound			
Start Time	Left	Thru	Right	Left	Thru	Right	Left	Thru	Right	Left	Thru	Right	Int. Total
07:00 AM	0	3	0	1	2	0	0	4	1	1	1	1	14
07:15 AM	0	2	0	0	0	0	0	1	0	0	0	0	3
07:30 AM	0	2	0	0	1	0	0	3	0	0	1	0	7
07:45 AM	0	1	1	0	1	0	0	3	0	0	0	0	6
Total	0	8	1	1	4	0	0	11	1	1	2	1	30
08:00 AM	1	2	0	0	0	0	0	2	0	0	1	0	6
08:15 AM	1	4	0	0	0	0	0	2	0	0	5	0	12
08:30 AM	0	1	0	0	0	0	0	1	1	0	3	2	8
08:45 AM	0	0	0	0	0	0	0	1	0	0	1	0	2
Total	2	7	0	0	0	0	0	6	1	0	10	2	28
09:00 AM	0	3	0	0	0	0	0	3	2	0	4	0	12
09:15 AM	0	0	0	0	0	0	0	0	1	0	1	1	3
09:30 AM	0	2	0	0	0	0	0	3	1	0	3	0	9
09:45 AM	1	0	0	0	0	0	0	0	0	0	0	0	1
Total	1	5	0	0	0	0	0	6	4	0	8	1	25
12:00 PM	1	1	0	0	0	0	0	0	0	0	0	0	2
12:15 PM	1	0	0	0	0	1	0	2	0	0	0	0	4
12:30 PM	1	0	0	0	0	0	0	0	0	0	0	0	1
12:45 PM	0	1	0	0	1	1	0	2	0	0	0	0	5
Total	3	2	0	0	1	2	0	4	0	0	0	0	12
01:00 PM	0	0	0	1	1	1	0	0	0	0	0	0	3
01:15 PM	0	1	0	0	0	0	0	1	0	0	0	0	2
01:30 PM	0	0	1	1	1	1	0	2	0	0	1	0	7
01:45 PM	0	0	0	0	2	1	0	0	0	0	0	0	3
Total	0	1	1	2	4	3	0	3	0	0	1	0	15
03:00 PM	0	4	0	0	0	1	0	1	1	0	0	0	7
03:15 PM	4	4	1	0	1	0	1	5	2	0	3	0	21
03:30 PM	0	4	1	0	1	0	1	1	0	0	3	0	11
03:45 PM	0	3	0	0	1	0	0	3	1	0	2	0	10
Total	4	15	2	0	3	1	2	10	4	0	8	0	49
04:00 PM	1	2	0	0	1	0	1	4	1	0	3	0	13
04:15 PM	1	0	2	0	0	0	0	3	2	0	1	0	9
04:30 PM	0	2	1	0	0	0	0	1	1	0	1	0	6
04:45 PM	0	3	1	0	1	0	0	2	1	0	3	0	11
Total	2	7	4	0	2	0	1	10	5	0	8	0	39
05:00 PM	2	1	0	0	0	0	0	1	0	0	2	1	7
05:15 PM	1	1	1	0	0	0	0	0	4	0	2	0	9
05:30 PM	0	1	1	0	0	0	0	1	2	0	3	0	8
05:45 PM	1	0	1	1	0	0	1	1	1	0	0	0	6
Total	4	3	3	1	0	0	1	3	7	0	7	1	30
Grand Total	16	48	11	4	14	6	4	53	22	1	44	5	228
Apprch %	21.3	64	14.7	16.7	58.3	25	5.1	67.1	27.8	2	88	10	
Total %	7	21.1	4.8	1.8	6.1	2.6	1.8	23.2	9.6	0.4	19.3	2.2	

CITY TRAFFIC COUNTERS

626.991.7522

www.ctcounters.com

File Name : paxton_laurelcanyon_buses
Site Code : 00000000
Start Date : 3/26/2015
Page No : 2

	Laurel Cyn Blvd Southbound				Paxton St Westbound				Laurel Cyn Blvd Northbound				Paxton St Eastbound				
Start Time	Left	Thru	Right	App. Total	Left	Thru	Right	App. Total	Left	Thru	Right	App. Total	Left	Thru	Right	App. Total	Int. Total
Peak Hour Analysis From 07:00 AM to 09:45 AM - Peak 1 of 1																	
Peak Hour for Entire Intersection Begins at 08:15 AM																	
08:15 AM	**1**	**4**	0	**5**	0	0	0	0	0	2	0	2	0	**5**	0	**5**	**12**
08:30 AM	0	1	0	1	0	0	0	0	0	1	1	2	0	3	**2**	5	8
08:45 AM	0	0	0	0	0	0	0	0	0	1	0	1	0	1	0	1	2
09:00 AM	0	3	0	3	0	0	0	0	0	**3**	**2**	**5**	0	4	0	4	12
Total Volume	1	8	0	9	0	0	0	0	0	7	3	10	0	13	2	15	34
% App. Total	11.1	88.9	0		0	0	0		0	70	30		0	86.7	13.3		
PHF	.250	.500	.000	.450	.000	.000	.000	.000	.000	.583	.375	.500	.000	.650	.250	.750	.708

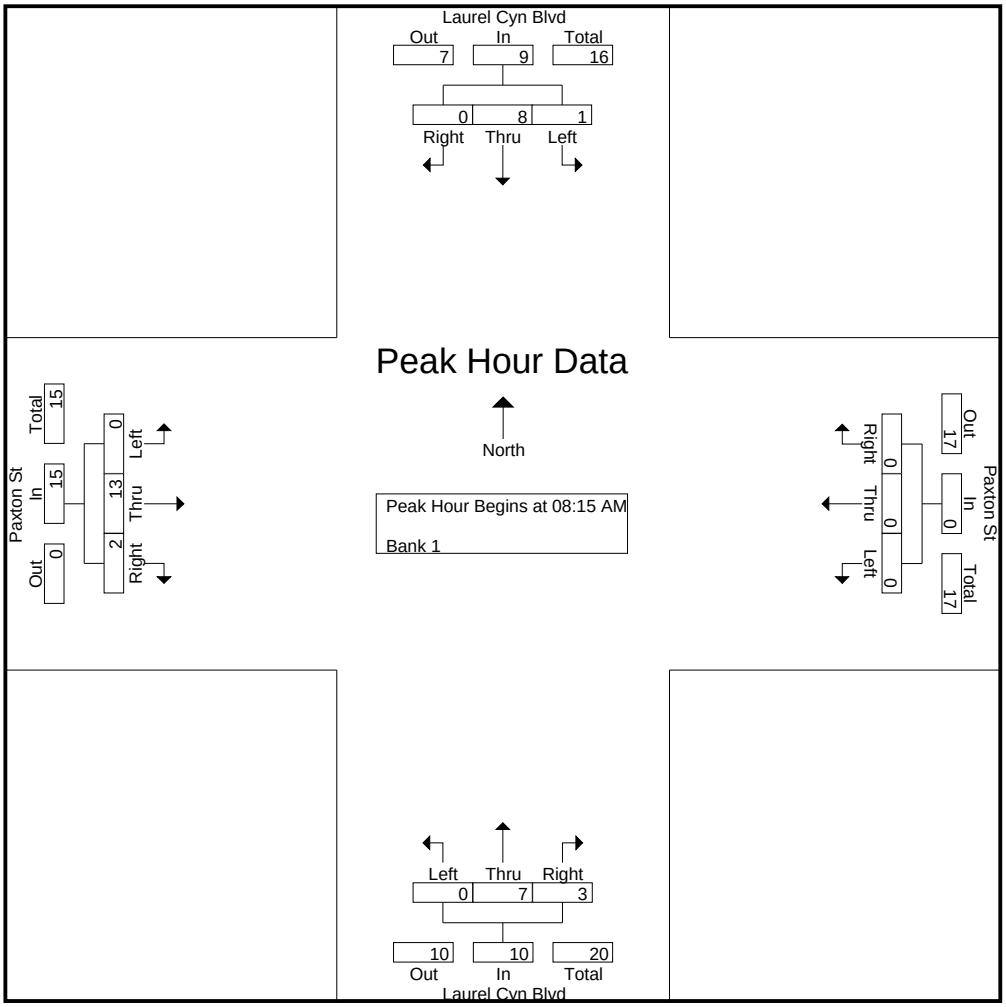

CITY TRAFFIC COUNTERS

626.991.7522

www.ctcounters.com

File Name : paxton_laurelcanyon_buses
Site Code : 00000000
Start Date : 3/26/2015
Page No : 3

	Laurel Cyn Blvd Southbound				Paxton St Westbound				Laurel Cyn Blvd Northbound				Paxton St Eastbound				
Start Time	Left	Thru	Right	App. Total	Left	Thru	Right	App. Total	Left	Thru	Right	App. Total	Left	Thru	Right	App. Total	Int. Total
Peak Hour Analysis From 10:00 AM to 01:45 PM - Peak 1 of 1																	
Peak Hour for Entire Intersection Begins at 12:45 PM																	
12:45 PM	0	**1**	0	**1**	0	**1**	**1**	2	0	**2**	0	**2**	0	0	0	0	5
01:00 PM	0	0	0	0	**1**	1	1	**3**	0	0	0	0	0	0	0	0	3
01:15 PM	0	1	0	1	0	0	0	0	0	1	0	1	0	0	0	0	2
01:30 PM	0	0	**1**	1	1	1	1	3	0	2	0	2	0	**1**	0	**1**	**7**
Total Volume	0	2	1	3	2	3	3	8	0	5	0	5	0	1	0	1	17
% App. Total	0	66.7	33.3		25	37.5	37.5		0	100	0		0	100	0		
PHF	.000	.500	.250	.750	.500	.750	.750	.667	.000	.625	.000	.625	.000	.250	.000	.250	.607

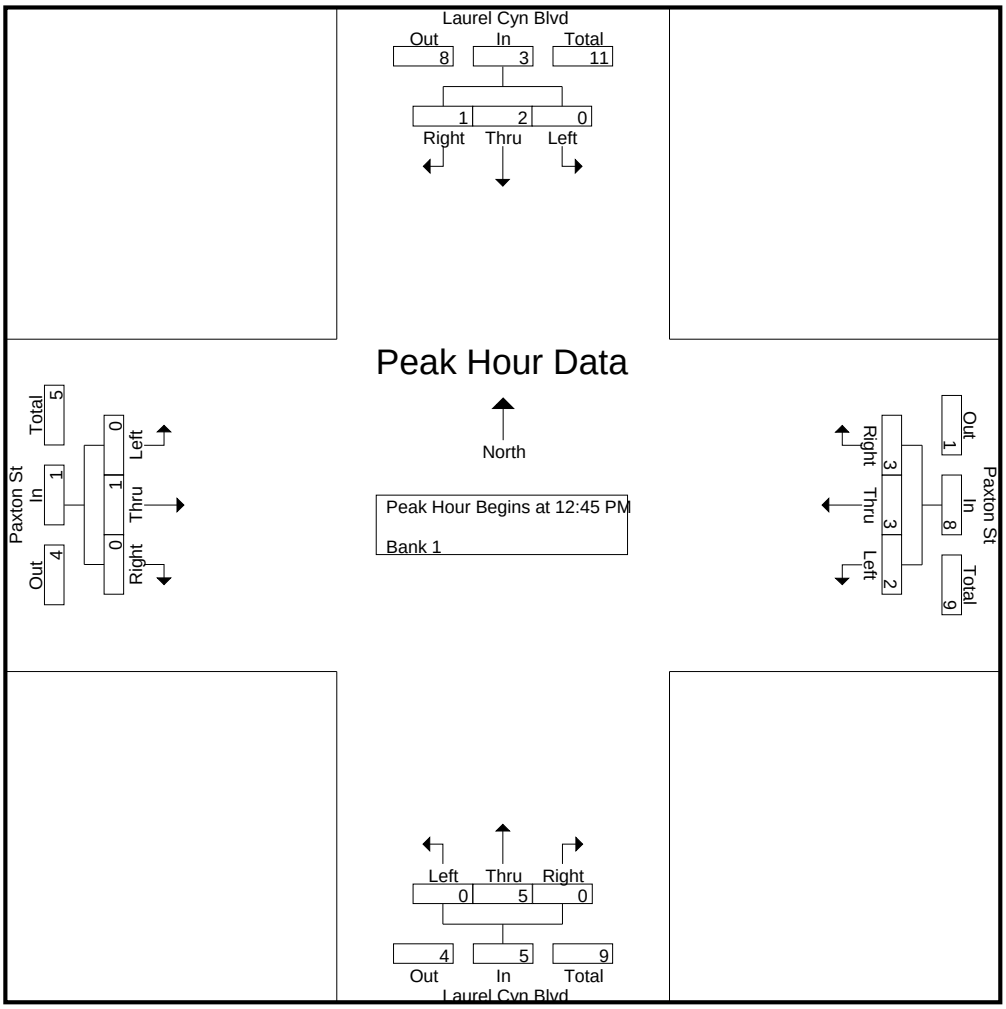

CITY TRAFFIC COUNTERS

626.991.7522

www.ctcounters.com

File Name : paxton_laurelcanyon_buses
Site Code : 00000000
Start Date : 3/26/2015
Page No : 4

	Laurel Cyn Blvd Southbound				Paxton St Westbound				Laurel Cyn Blvd Northbound				Paxton St Eastbound				
Start Time	Left	Thru	Right	App. Total	Left	Thru	Right	App. Total	Left	Thru	Right	App. Total	Left	Thru	Right	App. Total	Int. Total
Peak Hour Analysis From 02:00 PM to 05:45 PM - Peak 1 of 1																	
Peak Hour for Entire Intersection Begins at 03:15 PM																	
03:15 PM	**4**	**4**	**1**	**9**	0	**1**	0	**1**	**1**	**5**	**2**	**8**	0	**3**	0	**3**	**21**
03:30 PM	0	4	1	5	0	1	0	1	1	1	0	2	0	3	0	3	11
03:45 PM	0	3	0	3	0	1	0	1	0	3	1	4	0	2	0	2	10
04:00 PM	1	2	0	3	0	1	0	1	1	4	1	6	0	3	0	3	13
Total Volume	5	13	2	20	0	4	0	4	3	13	4	20	0	11	0	11	55
% App. Total	25	65	10		0	100	0		15	65	20		0	100	0		
PHF	.313	.813	.500	.556	.000	1.00	.000	1.00	.750	.650	.500	.625	.000	.917	.000	.917	.655

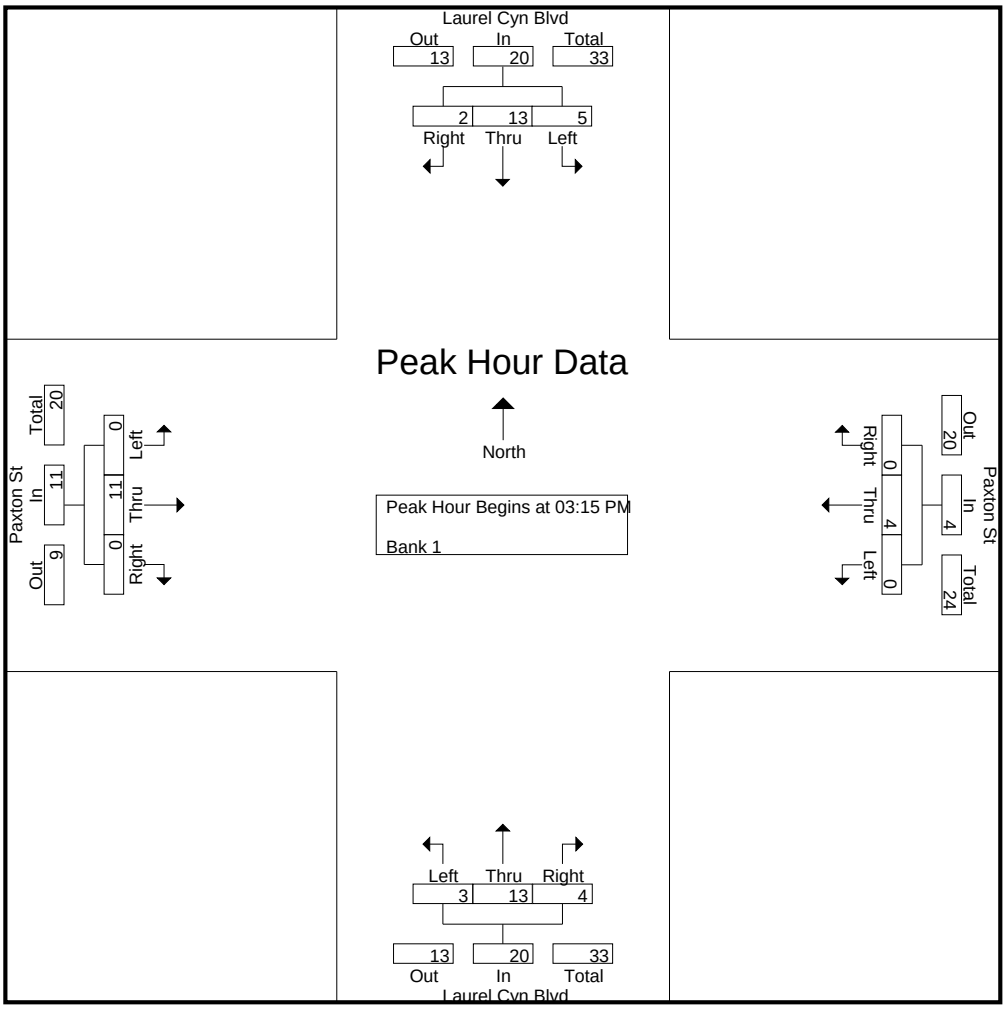

CITY TRAFFIC COUNTERS

626.991.7522

www.ctcounters.com

File Name : paxton_laurelcanyon_2axle
Site Code : 00000000
Start Date : 3/26/2015
Page No : 1

Groups Printed- Unshifted

	Laurel Canyon Blvd Southbound			Paxton St Westbound			Laurel Canyon Blvd Northbound			Paxton St Eastbound			
Start Time	Left	Thru	Right	Left	Thru	Right	Left	Thru	Right	Left	Thru	Right	Int. Total
07:00 AM	1	4	1	1	2	1	1	5	2	0	4	1	23
07:15 AM	3	5	0	1	2	1	1	5	0	0	0	0	18
07:30 AM	1	6	1	1	1	0	0	1	1	0	4	0	16
07:45 AM	0	0	4	1	1	1	0	3	1	0	2	0	13
Total	5	15	6	4	6	3	2	14	4	0	10	1	70
08:00 AM	1	6	0	1	1	1	1	5	2	1	2	2	23
08:15 AM	2	6	0	2	2	2	0	5	1	0	6	2	28
08:30 AM	2	5	0	1	2	0	1	2	1	0	4	1	19
08:45 AM	3	7	1	1	2	1	0	2	1	0	0	1	19
Total	8	24	1	5	7	4	2	14	5	1	12	6	89
09:00 AM	2	5	0	0	1	1	0	5	1	1	3	1	20
09:15 AM	1	2	0	1	2	2	0	1	2	1	1	1	14
09:30 AM	0	7	0	0	0	4	2	6	1	1	0	1	22
09:45 AM	0	5	0	0	3	0	3	0	0	0	0	0	11
Total	3	19	0	1	6	7	5	12	4	3	4	3	67
12:00 PM	1	2	0	1	1	1	0	1	2	0	2	0	11
12:15 PM	1	2	0	0	2	1	0	6	1	1	3	0	17
12:30 PM	1	4	1	1	1	1	0	3	1	0	0	0	13
12:45 PM	2	4	1	0	3	1	0	2	0	0	1	0	14
Total	5	12	2	2	7	4	0	12	4	1	6	0	55
01:00 PM	0	2	0	0	1	1	1	2	3	1	2	0	13
01:15 PM	1	0	0	0	1	0	0	2	1	0	2	0	7
01:30 PM	0	3	0	4	3	1	0	4	2	0	1	0	18
01:45 PM	2	3	1	0	4	1	2	1	0	2	2	1	19
Total	3	8	1	4	9	3	3	9	6	3	7	1	57
03:00 PM	0	4	0	2	4	0	1	2	0	0	6	0	19
03:15 PM	1	2	2	0	2	0	0	3	3	1	6	0	20
03:30 PM	1	4	0	0	2	0	1	3	0	0	5	1	17
03:45 PM	1	5	2	2	1	1	1	4	0	0	2	0	19
Total	3	15	4	4	9	1	3	12	3	1	19	1	75
04:00 PM	0	2	1	0	2	1	0	1	0	0	3	1	11
04:15 PM	1	4	3	2	3	2	1	3	0	0	1	0	20
04:30 PM	2	2	0	0	1	0	1	2	0	0	4	0	12
04:45 PM	2	6	0	0	2	0	0	1	1	0	2	2	16
Total	5	14	4	2	8	3	2	7	1	0	10	3	59
05:00 PM	1	10	1	0	1	1	1	3	1	0	2	0	21
05:15 PM	0	2	0	0	2	0	0	1	0	0	4	0	9
05:30 PM	1	2	1	0	0	0	1	2	1	0	2	1	11
05:45 PM	1	4	1	0	3	0	0	4	0	1	0	0	14
Total	3	18	3	0	6	1	2	10	2	1	8	1	55
Grand Total	35	125	21	22	58	26	19	90	29	10	76	16	527
Apprch %	19.3	69.1	11.6	20.8	54.7	24.5	13.8	65.2	21	9.8	74.5	15.7	
Total %	6.6	23.7	4	4.2	11	4.9	3.6	17.1	5.5	1.9	14.4	3	

CITY TRAFFIC COUNTERS

626.991.7522

www.ctcounters.com

File Name : paxton_laurelcanyon_2axle
Site Code : 00000000
Start Date : 3/26/2015
Page No : 2

	Laurel Canyon Blvd Southbound				Paxton St Westbound				Laurel Canyon Blvd Northbound				Paxton St Eastbound				
Start Time	Left	Thru	Right	App. Total	Left	Thru	Right	App. Total	Left	Thru	Right	App. Total	Left	Thru	Right	App. Total	Int. Total
Peak Hour Analysis From 07:00 AM to 09:45 AM - Peak 1 of 1																	
Peak Hour for Entire Intersection Begins at 08:00 AM																	
08:00 AM	1	6	0	7	1	1	1	3	**1**	**5**	**2**	**8**	**1**	2	**2**	5	23
08:15 AM	2	6	0	8	**2**	**2**	**2**	**6**	0	5	1	6	0	**6**	2	**8**	**28**
08:30 AM	2	5	0	7	1	2	0	3	1	2	1	4	0	4	1	5	19
08:45 AM	**3**	**7**	**1**	**11**	1	2	1	4	0	2	1	3	0	0	1	1	19
Total Volume	8	24	1	33	5	7	4	16	2	14	5	21	1	12	6	19	89
% App. Total	24.2	72.7	3		31.2	43.8	25		9.5	66.7	23.8		5.3	63.2	31.6		
PHF	.667	.857	.250	.750	.625	.875	.500	.667	.500	.700	.625	.656	.250	.500	.750	.594	.795

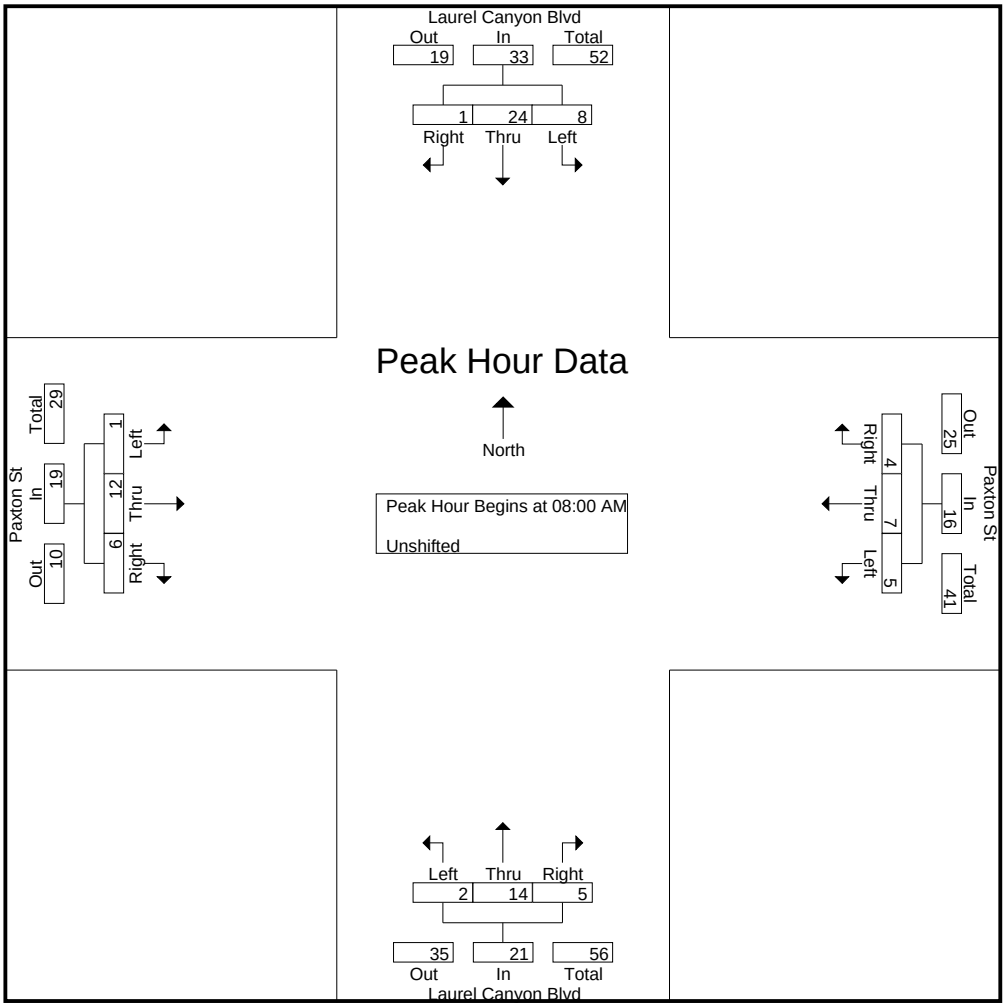

CITY TRAFFIC COUNTERS

626.991.7522

www.ctcounters.com

File Name : paxton_laurelcanyon_2axle
Site Code : 00000000
Start Date : 3/26/2015
Page No : 3

	Laurel Canyon Blvd Southbound				Paxton St Westbound				Laurel Canyon Blvd Northbound				Paxton St Eastbound				
Start Time	Left	Thru	Right	App. Total	Left	Thru	Right	App. Total	Left	Thru	Right	App. Total	Left	Thru	Right	App. Total	Int. Total
Peak Hour Analysis From 10:00 AM to 01:45 PM - Peak 1 of 1																	
Peak Hour for Entire Intersection Begins at 12:15 PM																	
12:15 PM	1	2	0	3	0	2	**1**	3	0	**6**	1	**7**	**1**	**3**	0	**4**	**17**
12:30 PM	1	**4**	**1**	6	**1**	1	1	3	0	3	1	4	0	0	0	0	13
12:45 PM	**2**	4	1	**7**	0	**3**	1	**4**	0	2	0	2	0	1	0	1	14
01:00 PM	0	2	0	2	0	1	1	2	**1**	2	**3**	6	1	2	0	3	13
Total Volume	4	12	2	18	1	7	4	12	1	13	5	19	2	6	0	8	57
% App. Total	22.2	66.7	11.1		8.3	58.3	33.3		5.3	68.4	26.3		25	75	0		
PHF	.500	.750	.500	.643	.250	.583	1.00	.750	.250	.542	.417	.679	.500	.500	.000	.500	.838

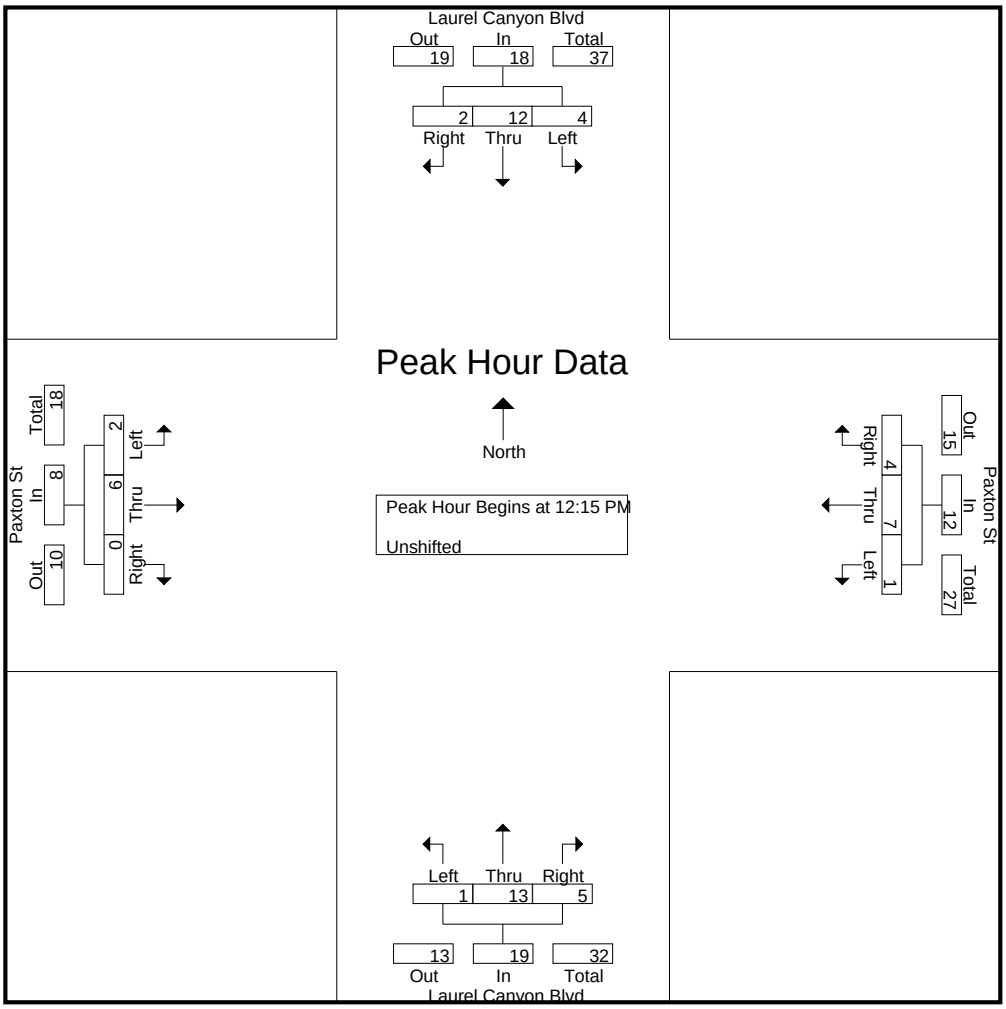

CITY TRAFFIC COUNTERS

626.991.7522

www.ctcounters.com

File Name : paxton_laurelcanyon_2axle
Site Code : 00000000
Start Date : 3/26/2015
Page No : 4

	Laurel Canyon Blvd Southbound				Paxton St Westbound				Laurel Canyon Blvd Northbound				Paxton St Eastbound				
Start Time	Left	Thru	Right	App. Total	Left	Thru	Right	App. Total	Left	Thru	Right	App. Total	Left	Thru	Right	App. Total	Int. Total
Peak Hour Analysis From 02:00 PM to 05:45 PM - Peak 1 of 1																	
Peak Hour for Entire Intersection Begins at 03:00 PM																	
03:00 PM	0	4	0	4	**2**	**4**	0	**6**	**1**	2	0	3	0	**6**	0	6	19
03:15 PM	**1**	2	**2**	5	0	2	0	2	0	3	**3**	**6**	**1**	6	0	**7**	**20**
03:30 PM	1	4	0	5	0	2	0	2	1	3	0	4	0	5	**1**	6	17
03:45 PM	1	**5**	2	**8**	2	1	**1**	4	1	**4**	0	5	0	2	0	2	19
Total Volume	3	15	4	22	4	9	1	14	3	12	3	18	1	19	1	21	75
% App. Total	13.6	68.2	18.2		28.6	64.3	7.1		16.7	66.7	16.7		4.8	90.5	4.8		
PHF	.750	.750	.500	.688	.500	.563	.250	.583	.750	.750	.250	.750	.250	.792	.250	.750	.938

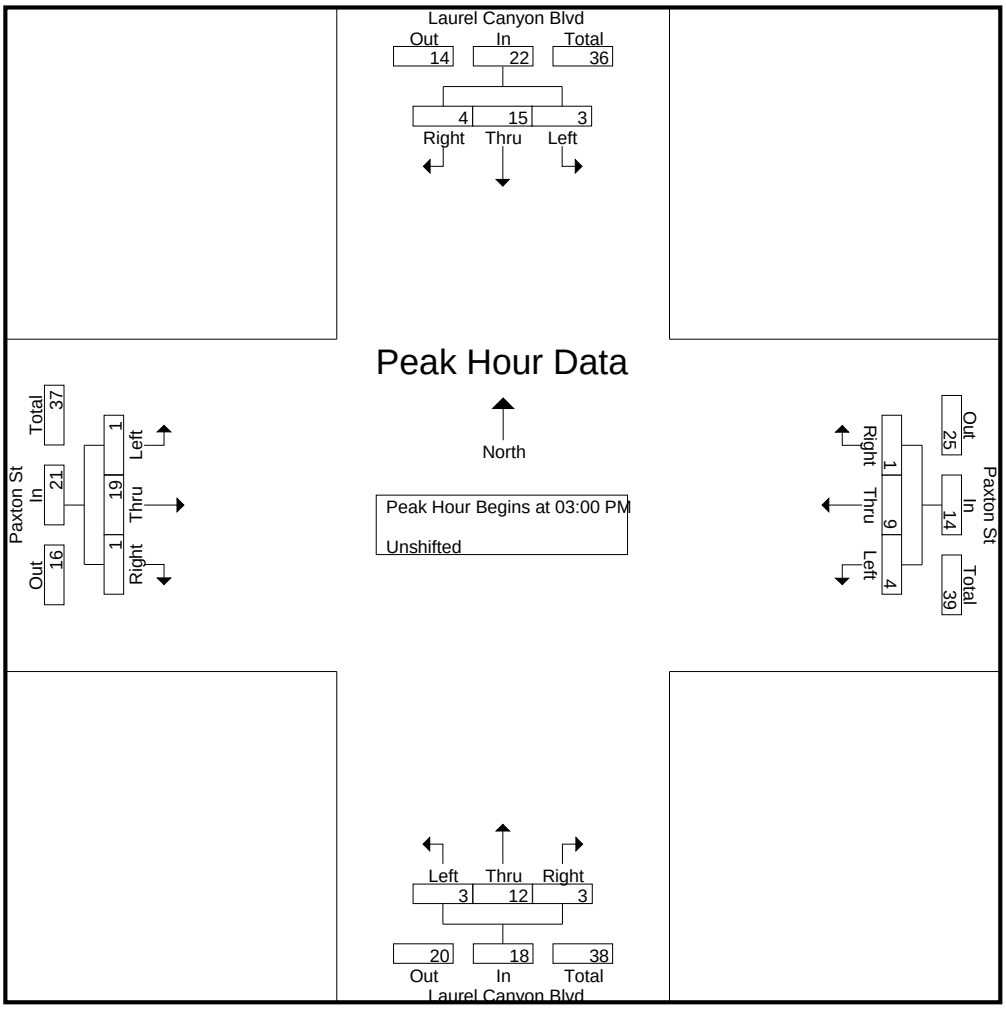

CITY TRAFFIC COUNTERS

626.991.7522

www.ctcounters.com

File Name : paxton_laurelcanyon_3axle
Site Code : 00000000
Start Date : 3/26/2015
Page No : 1

Groups Printed- Bank 1

	Laurel Cyn Blvd Southbound			Paxton St Westbound			Laurel Cyn Blvd Northbound			Paxton St Eastbound			
Start Time	Left	Thru	Right	Left	Thru	Right	Left	Thru	Right	Left	Thru	Right	Int. Total
07:15 AM	0	1	0	0	3	0	0	0	0	0	0	0	4
07:30 AM	0	0	0	0	0	0	0	0	0	0	1	0	1
07:45 AM	0	1	0	0	0	0	0	0	0	0	0	0	1
Total	0	2	0	0	3	0	0	0	0	0	1	0	6
08:00 AM	1	0	0	0	0	0	0	2	0	0	0	1	4
08:15 AM	0	0	0	0	0	0	0	0	0	0	0	1	1
08:30 AM	0	0	0	0	0	0	0	0	0	0	1	0	1
08:45 AM	1	1	0	0	1	0	0	1	1	0	0	0	5
Total	2	1	0	0	1	0	0	3	1	0	1	2	11
09:00 AM	0	1	0	0	0	0	0	0	1	0	0	0	2
09:30 AM	0	2	0	0	1	0	0	0	1	0	0	0	4
09:45 AM	0	1	1	0	1	0	0	1	0	0	2	0	6
Total	0	4	1	0	2	0	0	1	2	0	2	0	12
12:00 PM	0	1	0	0	0	0	0	0	1	0	1	0	3
12:15 PM	0	0	0	0	1	0	0	2	0	0	0	0	3
12:30 PM	0	1	1	0	0	0	1	0	0	0	0	0	3
12:45 PM	0	1	0	0	0	1	0	1	0	0	0	0	3
Total	0	3	1	0	1	1	1	3	1	0	1	0	12
01:00 PM	0	0	0	0	0	0	0	1	0	0	0	0	1
01:15 PM	0	0	0	0	0	0	0	0	1	0	1	0	2
01:30 PM	1	1	0	0	0	0	2	1	0	0	0	1	6
01:45 PM	0	1	0	0	0	0	0	3	1	0	0	1	6
Total	1	2	0	0	0	0	2	5	2	0	1	2	15
03:00 PM	0	2	0	0	0	0	0	0	0	0	1	1	4
03:15 PM	0	0	0	0	1	1	0	0	1	0	0	0	3
03:30 PM	0	0	0	0	0	1	0	0	0	0	0	0	1
Total	0	2	0	0	1	2	0	0	1	0	1	1	8
04:00 PM	2	0	1	0	0	0	0	0	0	0	2	0	5
04:15 PM	1	0	2	0	0	0	0	0	0	0	1	0	4
04:30 PM	0	0	1	0	0	0	0	0	0	0	0	0	1
04:45 PM	1	3	1	0	0	0	0	0	0	0	0	0	5
Total	4	3	5	0	0	0	0	0	0	0	3	0	15
05:00 PM	1	0	0	0	0	0	0	0	0	0	1	0	2
05:15 PM	0	0	1	0	0	0	0	1	0	0	0	0	2
05:30 PM	0	0	0	0	0	1	0	0	0	0	2	0	3
05:45 PM	0	0	1	0	0	0	0	0	0	0	0	0	1
Total	1	0	2	0	0	1	0	1	0	0	3	0	8
Grand Total	8	17	9	0	8	4	3	13	7	0	13	5	87
Apprch %	23.5	50	26.5	0	66.7	33.3	13	56.5	30.4	0	72.2	27.8	
Total %	9.2	19.5	10.3	0	9.2	4.6	3.4	14.9	8	0	14.9	5.7	

CITY TRAFFIC COUNTERS

626.991.7522

www.ctcounters.com

File Name : paxton_laurelcanyon_3axle
Site Code : 00000000
Start Date : 3/26/2015
Page No : 2

	Laurel Cyn Blvd Southbound				Paxton St Westbound				Laurel Cyn Blvd Northbound				Paxton St Eastbound				
Start Time	Left	Thru	Right	App. Total	Left	Thru	Right	App. Total	Left	Thru	Right	App. Total	Left	Thru	Right	App. Total	Int. Total
Peak Hour Analysis From 07:00 AM to 09:45 AM - Peak 1 of 1																	
Peak Hour for Entire Intersection Begins at 09:00 AM																	
09:00 AM	0	1	0	1	0	0	0	0	0	0	**1**	**1**	0	0	0	0	2
09:15 AM	0	0	0	0	0	0	0	0	0	0	0	0	0	0	0	0	0
09:30 AM	0	**2**	0	**2**	0	**1**	0	**1**	0	0	1	1	0	0	0	0	4
09:45 AM	0	1	**1**	2	0	1	0	1	0	**1**	0	1	0	**2**	0	**2**	**6**
Total Volume	0	4	1	5	0	2	0	2	0	1	2	3	0	2	0	2	12
% App. Total	0	80	20		0	100	0		0	33.3	66.7		0	100	0		
PHF	.000	.500	.250	.625	.000	.500	.000	.500	.000	.250	.500	.750	.000	.250	.000	.250	.500

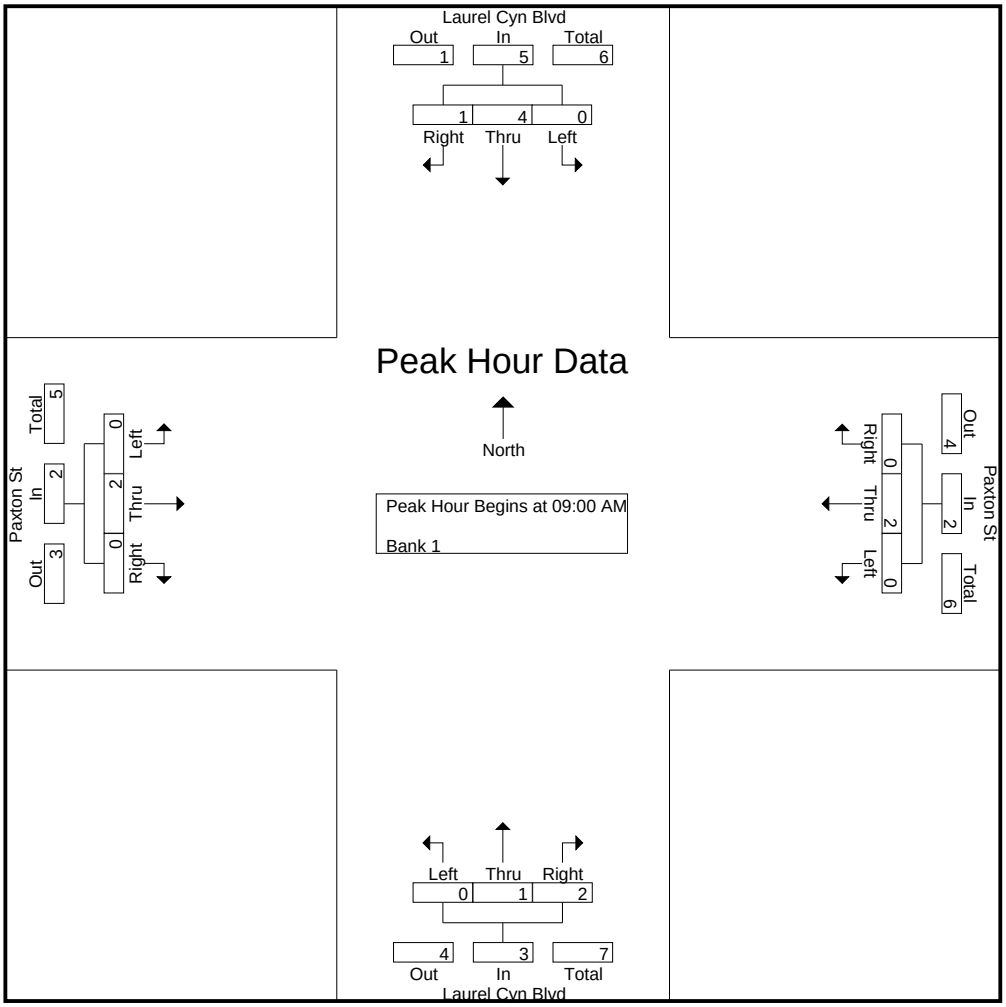

CITY TRAFFIC COUNTERS

626.991.7522

www.ctcounters.com

File Name : paxton_laurelcanyon_3axle
Site Code : 00000000
Start Date : 3/26/2015
Page No : 3

	Laurel Cyn Blvd Southbound				Paxton St Westbound				Laurel Cyn Blvd Northbound				Paxton St Eastbound				
Start Time	Left	Thru	Right	App. Total	Left	Thru	Right	App. Total	Left	Thru	Right	App. Total	Left	Thru	Right	App. Total	Int. Total
Peak Hour Analysis From 10:00 AM to 01:45 PM - Peak 1 of 1																	
Peak Hour for Entire Intersection Begins at 01:00 PM																	
01:00 PM	0	0	0	0	0	0	0	0	0	1	0	1	0	0	0	0	1
01:15 PM	0	0	0	0	0	0	0	0	0	0	**1**	1	0	**1**	0	**1**	2
01:30 PM	**1**	**1**	0	**2**	0	0	0	0	**2**	1	0	3	0	0	**1**	1	**6**
01:45 PM	0	1	0	1	0	0	0	0	0	**3**	1	**4**	0	0	1	1	6
Total Volume	1	2	0	3	0	0	0	0	2	5	2	9	0	1	2	3	15
% App. Total	33.3	66.7	0		0	0	0		22.2	55.6	22.2		0	33.3	66.7		
PHF	.250	.500	.000	.375	.000	.000	.000	.000	.250	.417	.500	.563	.000	.250	.500	.750	.625

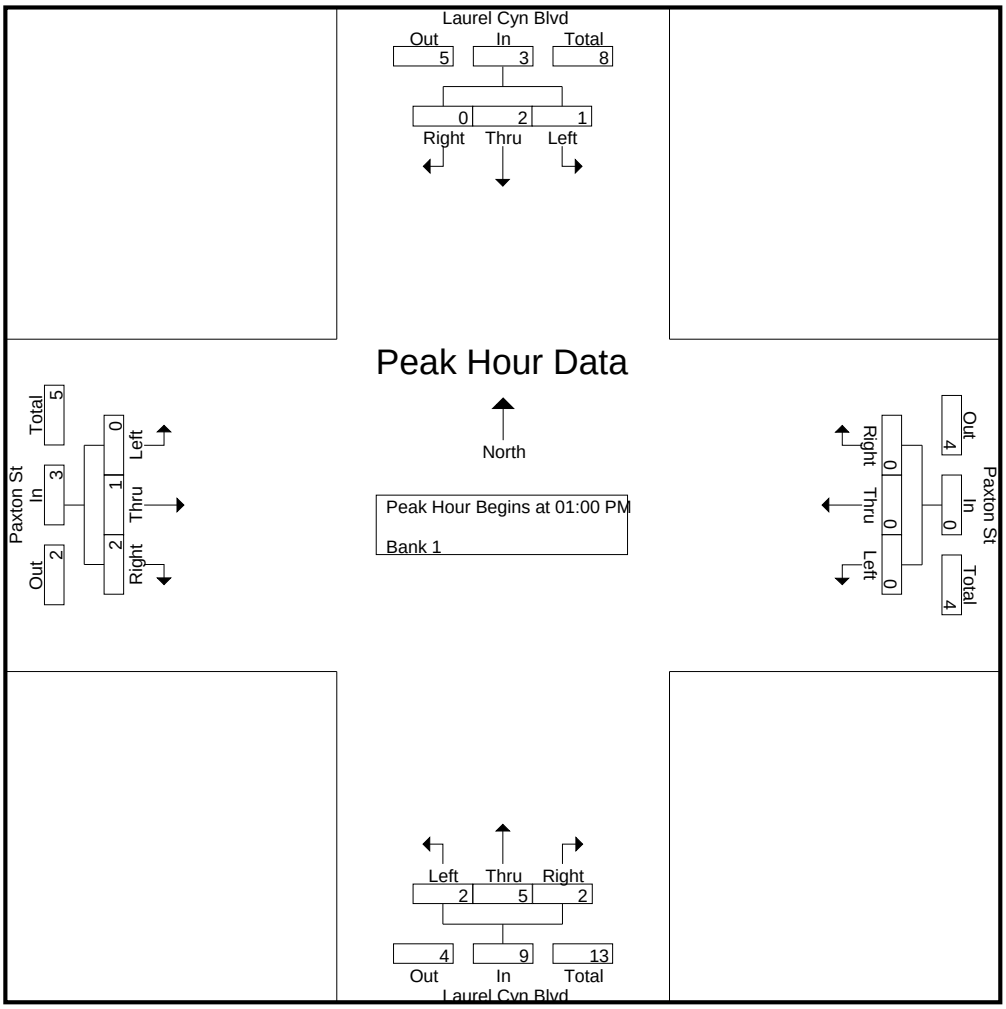

CITY TRAFFIC COUNTERS

626.991.7522

www.ctcounters.com

File Name : paxton_laurelcanyon_3axle
Site Code : 00000000
Start Date : 3/26/2015
Page No : 4

	Laurel Cyn Blvd Southbound				Paxton St Westbound				Laurel Cyn Blvd Northbound				Paxton St Eastbound				
Start Time	Left	Thru	Right	App. Total	Left	Thru	Right	App. Total	Left	Thru	Right	App. Total	Left	Thru	Right	App. Total	Int. Total
Peak Hour Analysis From 02:00 PM to 05:45 PM - Peak 1 of 1																	
Peak Hour for Entire Intersection Begins at 04:00 PM																	
04:00 PM	**2**	0	1	3	0	0	0	0	0	0	0	0	0	**2**	0	**2**	**5**
04:15 PM	1	0	**2**	3	0	0	0	0	0	0	0	0	0	1	0	1	4
04:30 PM	0	0	1	1	0	0	0	0	0	0	0	0	0	0	0	0	1
04:45 PM	1	**3**	1	**5**	0	0	0	0	0	0	0	0	0	0	0	0	5
Total Volume	4	3	5	12	0	0	0	0	0	0	0	0	0	3	0	3	15
% App. Total	33.3	25	41.7		0	0	0		0	0	0		0	100	0		
PHF	.500	.250	.625	.600	.000	.000	.000	.000	.000	.000	.000	.000	.000	.375	.000	.375	.750

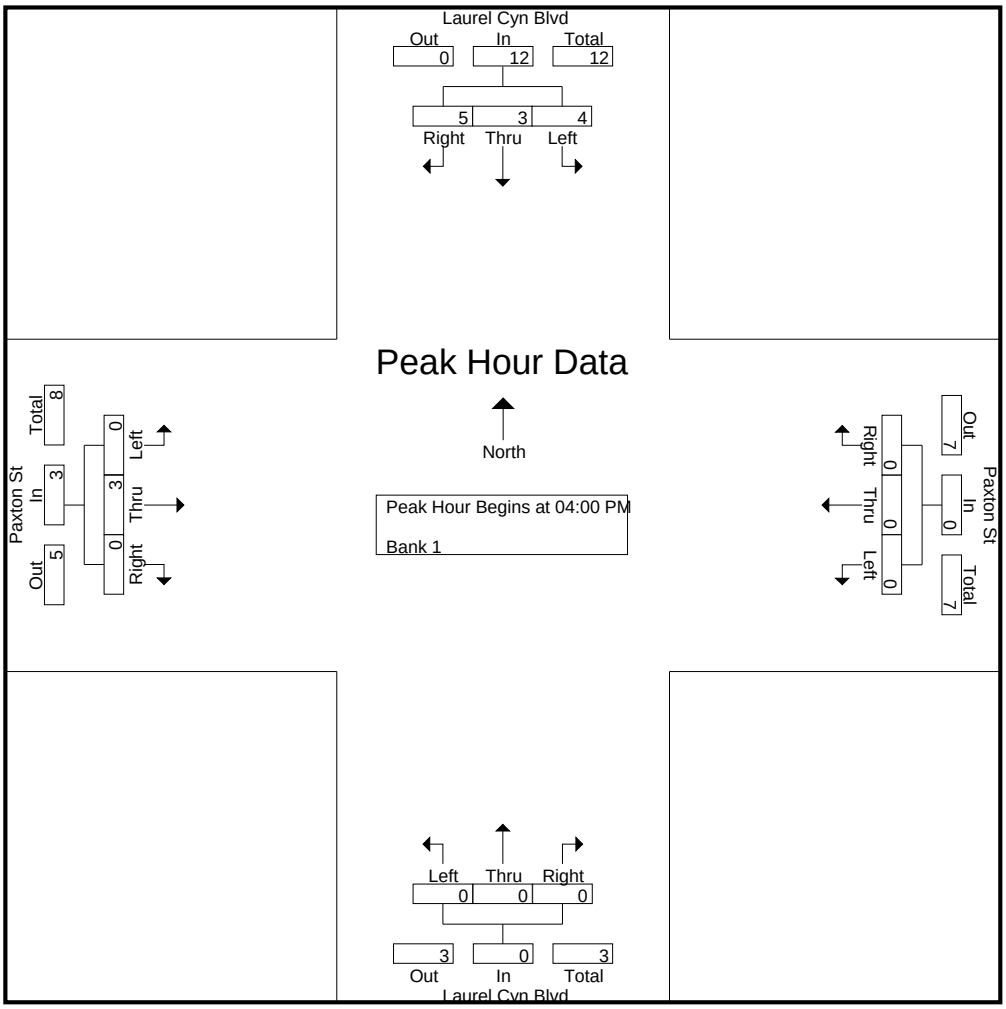

CITY TRAFFIC COUNTERS

626.991.7522

www.ctcounters.com

File Name : paxton_laurelcanyon_4axle
Site Code : 00000000
Start Date : 3/26/2015
Page No : 1

Groups Printed- Bank 2

	Laurel Cyn Blvd Southbound			Paxton St Westbound			Laurel Cyn Blvd Northbound			Paxton St Eastbound			
Start Time	Left	Thru	Right	Left	Thru	Right	Left	Thru	Right	Left	Thru	Right	Int. Total
07:00 AM	0	1	0	0	0	0	0	0	0	0	0	0	1
07:45 AM	1	2	0	0	0	0	0	1	0	0	0	0	4
Total	1	3	0	0	0	0	0	1	0	0	0	0	5
08:00 AM	0	0	0	0	0	0	0	1	0	0	0	0	1
08:15 AM	0	0	0	0	0	1	0	0	0	1	0	0	2
Total	0	0	0	0	0	1	0	1	0	1	0	0	3
09:00 AM	0	0	1	0	0	0	0	0	0	0	0	0	1
09:30 AM	0	0	0	0	0	0	0	1	0	0	0	0	1
Total	0	0	1	0	0	0	0	1	0	0	0	0	2
12:15 PM	0	0	0	0	0	0	0	0	0	0	1	0	1
Total	0	0	0	0	0	0	0	0	0	0	1	0	1
01:00 PM	0	0	1	0	0	0	0	0	0	0	0	0	1
01:45 PM	0	1	0	0	0	0	0	0	0	0	0	0	1
Total	0	1	1	0	0	0	0	0	0	0	0	0	2
04:00 PM	0	0	0	0	0	1	0	0	0	0	0	0	1
Total	0	0	0	0	0	1	0	0	0	0	0	0	1
Grand Total	1	4	2	0	0	2	0	3	0	1	1	0	14
Apprch %	14.3	57.1	28.6	0	0	100	0	100	0	50	50	0	
Total %	7.1	28.6	14.3	0	0	14.3	0	21.4	0	7.1	7.1	0	

CITY TRAFFIC COUNTERS

626.991.7522

www.ctcounters.com

File Name : paxton_laurelcanyon_4axle
Site Code : 00000000
Start Date : 3/26/2015
Page No : 2

	Laurel Cyn Blvd Southbound				Paxton St Westbound				Laurel Cyn Blvd Northbound				Paxton St Eastbound				
Start Time	Left	Thru	Right	App. Total	Left	Thru	Right	App. Total	Left	Thru	Right	App. Total	Left	Thru	Right	App. Total	Int. Total
Peak Hour Analysis From 07:00 AM to 09:45 AM - Peak 1 of 1																	
Peak Hour for Entire Intersection Begins at 07:30 AM																	
07:30 AM	0	0	0	0	0	0	0	0	0	0	0	0	0	0	0	0	0
07:45 AM	**1**	**2**	0	**3**	0	0	0	0	0	**1**	0	**1**	0	0	0	0	**4**
08:00 AM	0	0	0	0	0	0	0	0	0	1	0	1	0	0	0	0	1
08:15 AM	0	0	0	0	0	0	**1**	**1**	0	0	0	0	**1**	0	0	**1**	2
Total Volume	1	2	0	3	0	0	1	1	0	2	0	2	1	0	0	1	7
% App. Total	33.3	66.7	0		0	0	100		0	100	0		100	0	0		
PHF	.250	.250	.000	.250	.000	.000	.250	.250	.000	.500	.000	.500	.250	.000	.000	.250	.438

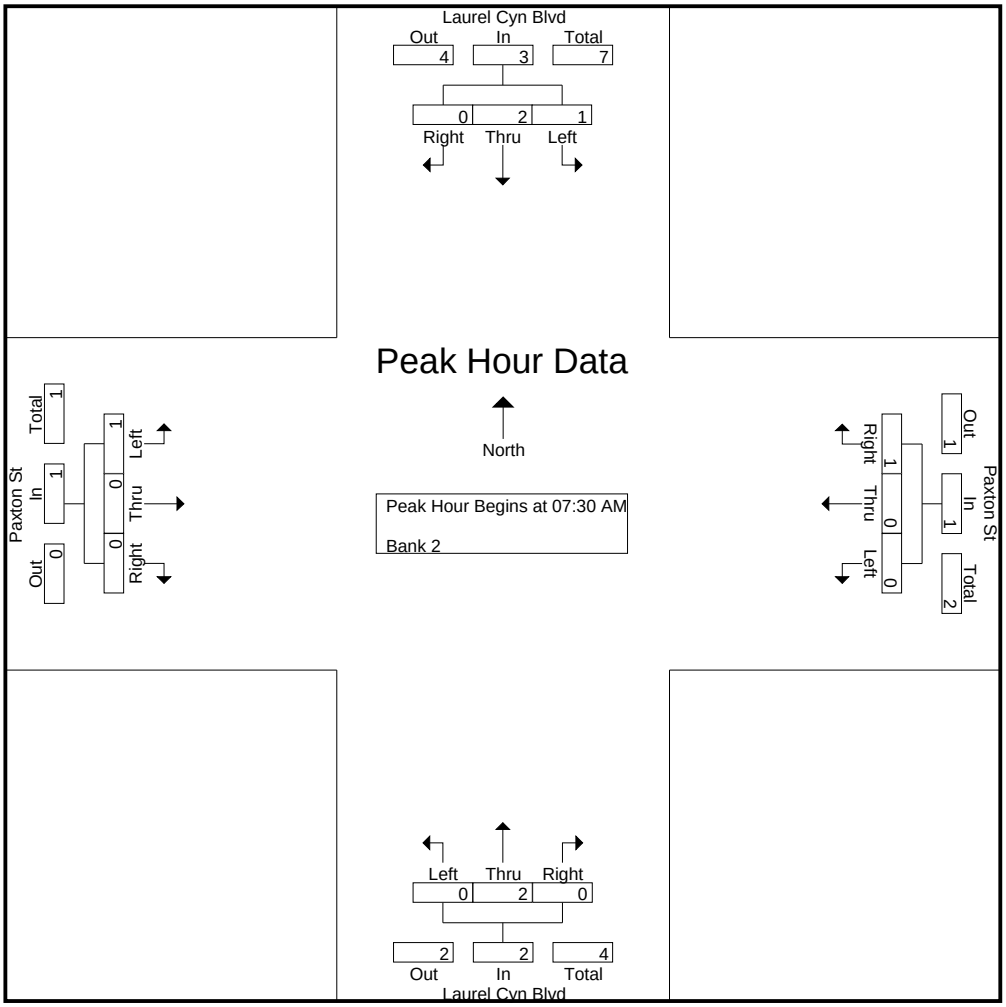

CITY TRAFFIC COUNTERS

626.991.7522

www.ctcounters.com

File Name : paxton_laurelcanyon_4axle
Site Code : 00000000
Start Date : 3/26/2015
Page No : 3

	Laurel Cyn Blvd Southbound				Paxton St Westbound				Laurel Cyn Blvd Northbound				Paxton St Eastbound				
Start Time	Left	Thru	Right	App. Total	Left	Thru	Right	App. Total	Left	Thru	Right	App. Total	Left	Thru	Right	App. Total	Int. Total
Peak Hour Analysis From 10:00 AM to 01:45 PM - Peak 1 of 1																	
Peak Hour for Entire Intersection Begins at 12:15 PM																	
12:15 PM	0	0	0	0	0	0	0	0	0	0	0	0	0	**1**	0	**1**	**1**
12:30 PM	0	0	0	0	0	0	0	0	0	0	0	0	0	0	0	0	0
12:45 PM	0	0	0	0	0	0	0	0	0	0	0	0	0	0	0	0	0
01:00 PM	0	0	**1**	**1**	0	0	0	0	0	0	0	0	0	0	0	0	1
Total Volume	0	0	1	1	0	0	0	0	0	0	0	0	0	1	0	1	2
% App. Total	0	0	100		0	0	0		0	0	0		0	100	0		
PHF	.000	.000	.250	.250	.000	.000	.000	.000	.000	.000	.000	.000	.000	.250	.000	.250	.500

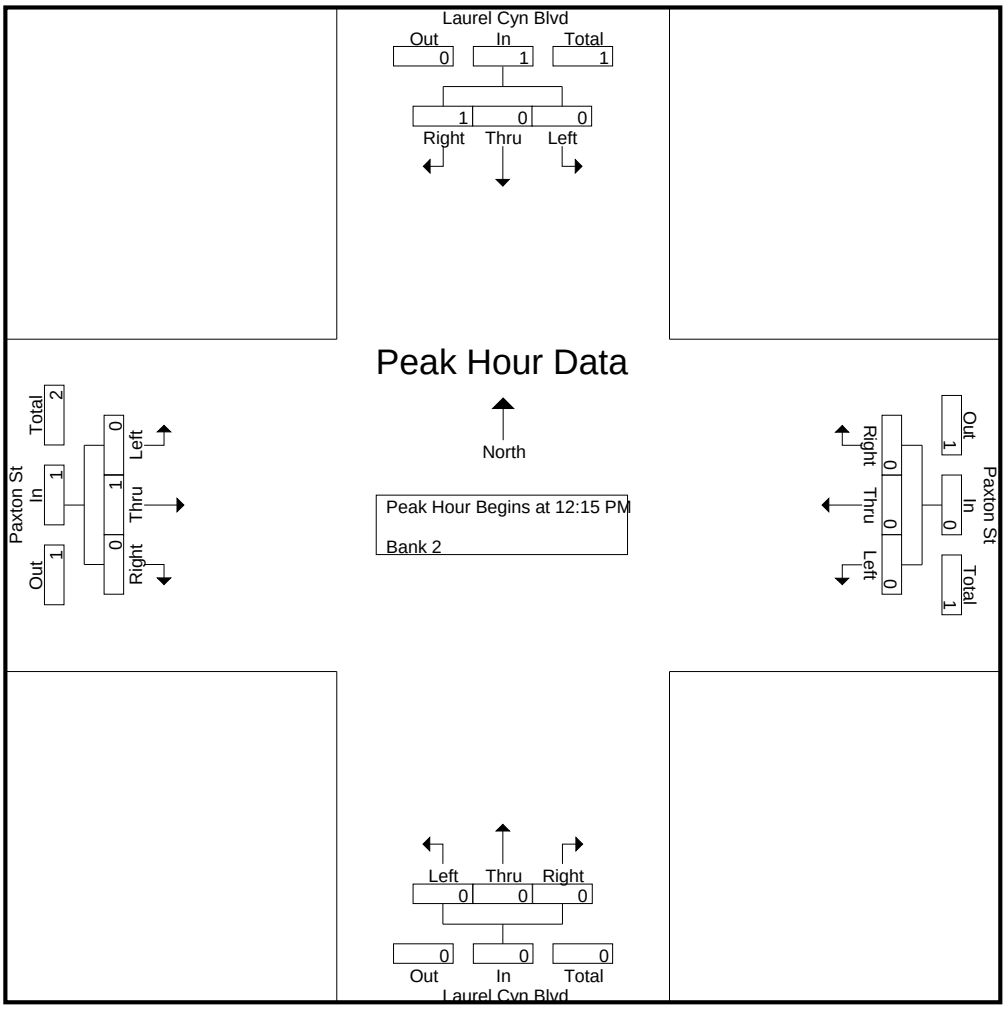

CITY TRAFFIC COUNTERS

626.991.7522

www.ctcounters.com

File Name : paxton_laurelcanyon_4axle
Site Code : 00000000
Start Date : 3/26/2015
Page No : 4

	Laurel Cyn Blvd Southbound				Paxton St Westbound				Laurel Cyn Blvd Northbound				Paxton St Eastbound				
Start Time	Left	Thru	Right	App. Total	Left	Thru	Right	App. Total	Left	Thru	Right	App. Total	Left	Thru	Right	App. Total	Int. Total
Peak Hour Analysis From 02:00 PM to 05:45 PM - Peak 1 of 1																	
Peak Hour for Entire Intersection Begins at 03:15 PM																	
03:15 PM	0	0	0	0	0	0	0	0	0	0	0	0	0	0	0	0	0
03:30 PM	0	0	0	0	0	0	0	0	0	0	0	0	0	0	0	0	0
03:45 PM	0	0	0	0	0	0	0	0	0	0	0	0	0	0	0	0	0
04:00 PM	0	0	0	0	0	0	**1**	**1**	0	0	0	0	0	0	0	0	**1**
Total Volume	0	0	0	0	0	0	1	1	0	0	0	0	0	0	0	0	1
% App. Total	0	0	0		0	0	100		0	0	0		0	0	0		
PHF	.000	.000	.000	.000	.000	.000	.250	.250	.000	.000	.000	.000	.000	.000	.000	.000	.250

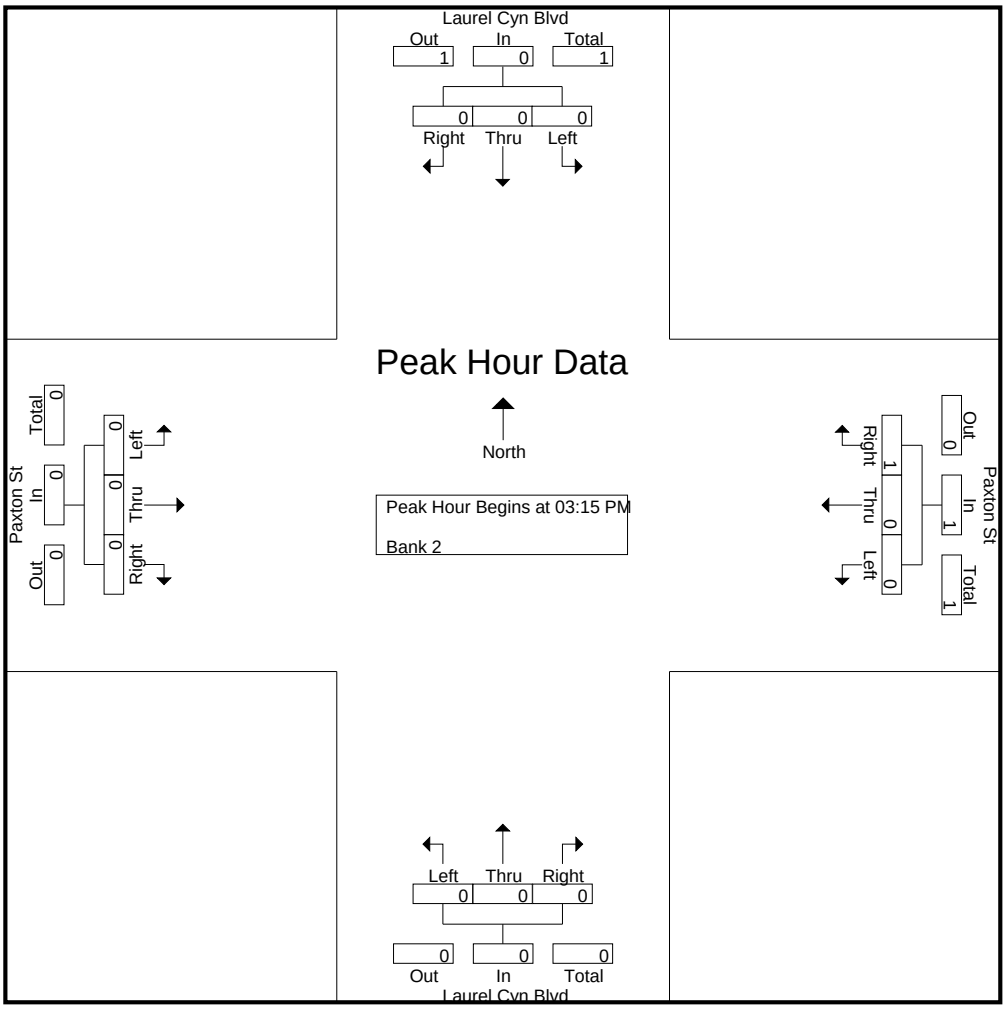

CITY TRAFFIC COUNTERS

626.991.7522

www.ctcounters.com

File Name : Paxton_LaurelCanyon_5Axle
Site Code : 00000000
Start Date : 3/25/2015
Page No : 1

Groups Printed- Unshifted

	Laurel Cyn Blvd Southbound			Paxton St Westbound			Laurel Cyn Blvd Northbound			Paxton St Eastbound			
Start Time	Left	Thru	Right	Left	Thru	Right	Left	Thru	Right	Left	Thru	Right	Int. Total
07:00 AM	0	0	1	0	0	0	0	0	0	0	0	0	1
07:15 AM	0	0	0	0	0	0	0	0	0	0	0	1	1
07:30 AM	0	1	0	0	0	0	0	0	0	0	0	0	1
07:45 AM	0	0	0	0	0	0	1	0	0	0	0	0	1
Total	0	1	1	0	0	0	1	0	0	0	0	1	4
08:15 AM	0	1	0	0	0	0	0	0	0	0	0	0	1
08:30 AM	0	0	0	0	0	0	1	0	0	0	0	0	1
Total	0	1	0	0	0	0	1	0	0	0	0	0	2
09:00 AM	0	1	0	0	0	0	0	0	0	0	0	0	1
09:15 AM	0	0	0	0	0	0	0	1	0	0	0	0	1
09:30 AM	0	0	0	0	0	0	0	0	0	1	0	0	1
Total	0	1	0	0	0	0	0	1	0	1	0	0	3
12:00 PM	0	0	0	0	0	0	0	1	0	0	0	0	1
12:15 PM	0	0	0	0	0	0	0	1	0	0	0	0	1
12:30 PM	0	0	0	0	0	0	1	0	0	0	0	0	1
12:45 PM	0	0	0	0	1	0	0	0	0	0	0	0	1
Total	0	0	0	0	1	0	1	2	0	0	0	0	4
01:00 PM	0	0	0	0	0	0	0	1	0	0	0	0	1
01:45 PM	0	1	0	0	0	0	0	0	0	0	0	0	1
Total	0	1	0	0	0	0	0	1	0	0	0	0	2
03:00 PM	0	0	0	0	0	0	0	0	0	0	1	0	1
Total	0	0	0	0	0	0	0	0	0	0	1	0	1
04:00 PM	0	0	0	0	1	0	0	0	0	0	1	0	2
04:15 PM	0	0	0	0	0	0	1	0	0	0	0	0	1
04:30 PM	0	0	0	0	0	0	0	0	0	0	1	0	1
04:45 PM	0	0	1	0	0	0	0	0	0	0	0	0	1
Total	0	0	1	0	1	0	1	0	0	0	2	0	5
05:15 PM	0	0	0	0	0	0	0	1	0	0	0	0	1
05:45 PM	0	0	0	0	0	0	0	0	0	1	0	0	1
Total	0	0	0	0	0	0	0	1	0	1	0	0	2
Grand Total	0	4	2	0	2	0	4	5	0	2	3	1	23
Apprch %	0	66.7	33.3	0	100	0	44.4	55.6	0	33.3	50	16.7	
Total %	0	17.4	8.7	0	8.7	0	17.4	21.7	0	8.7	13	4.3	

CITY TRAFFIC COUNTERS

626.991.7522

www.ctcounters.com

File Name : Paxton_LaurelCanyon_5Axle
Site Code : 00000000
Start Date : 3/25/2015
Page No : 2

	Laurel Cyn Blvd Southbound				Paxton St Westbound				Laurel Cyn Blvd Northbound				Paxton St Eastbound				
Start Time	Left	Thru	Right	App. Total	Left	Thru	Right	App. Total	Left	Thru	Right	App. Total	Left	Thru	Right	App. Total	Int. Total
Peak Hour Analysis From 07:00 AM to 09:45 AM - Peak 1 of 1																	
Peak Hour for Entire Intersection Begins at 07:00 AM																	
07:00 AM	0	0	**1**	**1**	0	0	0	0	0	0	0	0	0	0	0	0	**1**
07:15 AM	0	0	0	0	0	0	0	0	0	0	0	0	0	0	**1**	**1**	1
07:30 AM	0	**1**	0	1	0	0	0	0	0	0	0	0	0	0	0	0	1
07:45 AM	0	0	0	0	0	0	0	0	**1**	0	0	**1**	0	0	0	0	1
Total Volume	0	1	1	2	0	0	0	0	1	0	0	1	0	0	1	1	4
% App. Total	0	50	50		0	0	0		100	0	0		0	0	100		
PHF	.000	.250	.250	.500	.000	.000	.000	.000	.250	.000	.000	.250	.000	.000	.250	.250	1.00

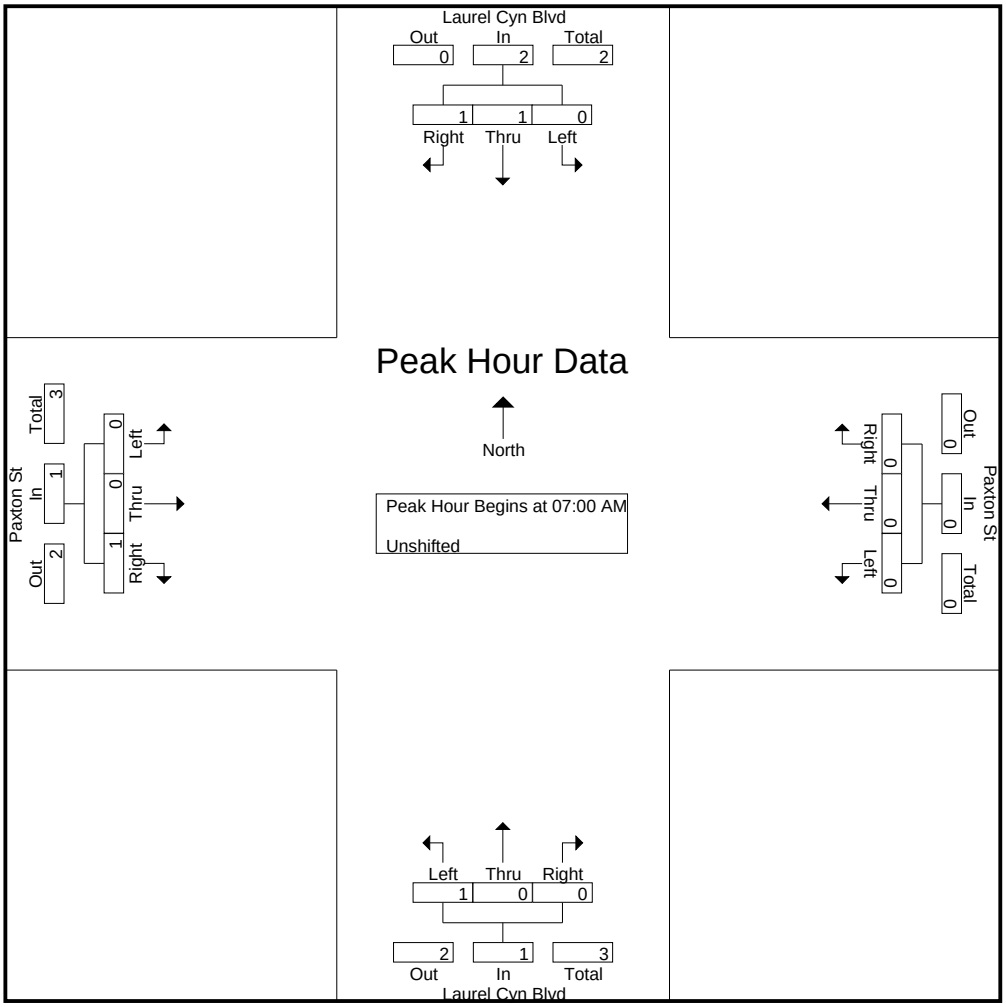

CITY TRAFFIC COUNTERS

626.991.7522

www.ctcounters.com

File Name : Paxton_LaurelCanyon_5Axle
Site Code : 00000000
Start Date : 3/25/2015
Page No : 3

	Laurel Cyn Blvd Southbound				Paxton St Westbound				Laurel Cyn Blvd Northbound				Paxton St Eastbound				
Start Time	Left	Thru	Right	App. Total	Left	Thru	Right	App. Total	Left	Thru	Right	App. Total	Left	Thru	Right	App. Total	Int. Total
Peak Hour Analysis From 10:00 AM to 01:45 PM - Peak 1 of 1																	
Peak Hour for Entire Intersection Begins at 12:00 PM																	
12:00 PM	0	0	0	0	0	0	0	0	0	**1**	0	**1**	0	0	0	0	**1**
12:15 PM	0	0	0	0	0	0	0	0	0	1	0	1	0	0	0	0	1
12:30 PM	0	0	0	0	0	0	0	0	**1**	0	0	1	0	0	0	0	1
12:45 PM	0	0	0	0	0	**1**	0	**1**	0	0	0	0	0	0	0	0	1
Total Volume	0	0	0	0	0	1	0	1	1	2	0	3	0	0	0	0	4
% App. Total	0	0	0		0	100	0		33.3	66.7	0		0	0	0		
PHF	.000	.000	.000	.000	.000	.250	.000	.250	.250	.500	.000	.750	.000	.000	.000	.000	1.00

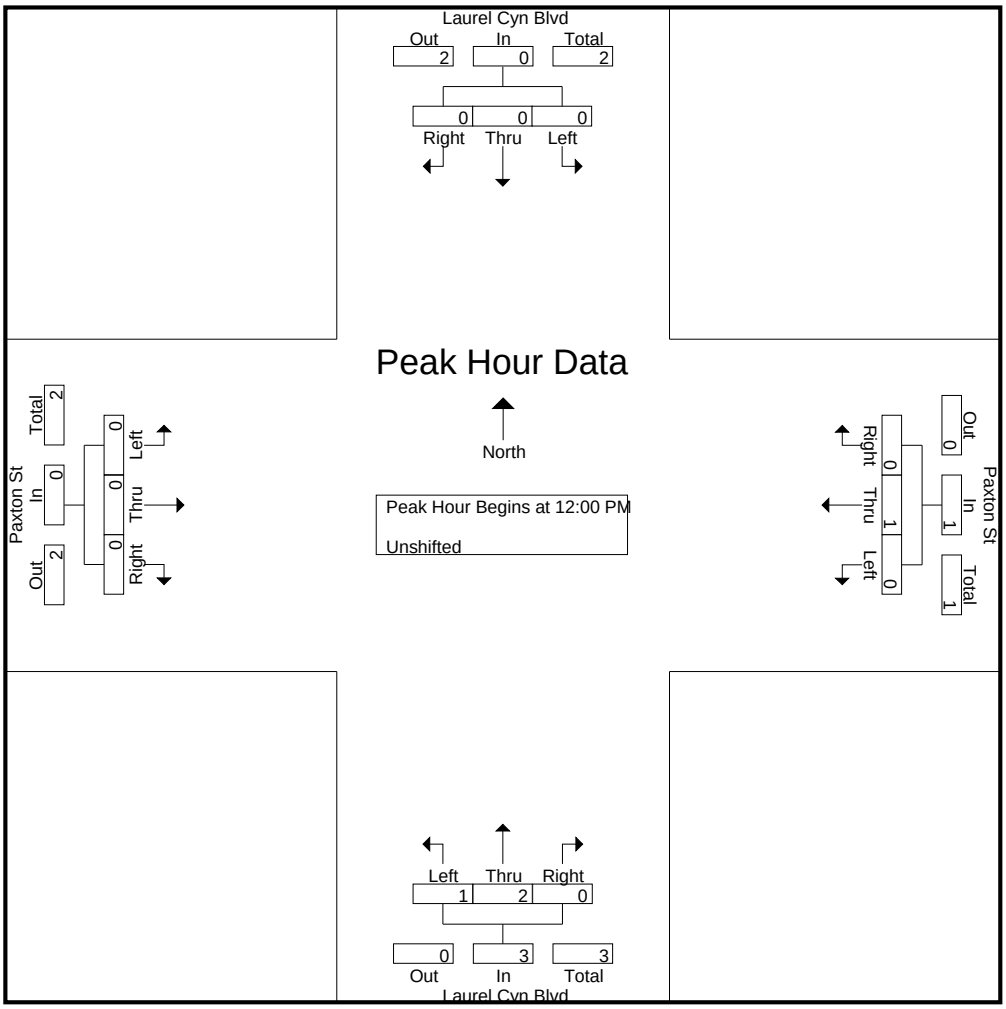

CITY TRAFFIC COUNTERS

626.991.7522

www.ctcounters.com

File Name : Paxton_LaurelCanyon_5Axle
Site Code : 00000000
Start Date : 3/25/2015
Page No : 4

	Laurel Cyn Blvd Southbound				Paxton St Westbound				Laurel Cyn Blvd Northbound				Paxton St Eastbound				
Start Time	Left	Thru	Right	App. Total	Left	Thru	Right	App. Total	Left	Thru	Right	App. Total	Left	Thru	Right	App. Total	Int. Total
Peak Hour Analysis From 02:00 PM to 05:45 PM - Peak 1 of 1																	
Peak Hour for Entire Intersection Begins at 04:00 PM																	
04:00 PM	0	0	0	0	0	**1**	0	**1**	0	0	0	0	0	**1**	0	**1**	**2**
04:15 PM	0	0	0	0	0	0	0	0	**1**	0	0	**1**	0	0	0	0	1
04:30 PM	0	0	0	0	0	0	0	0	0	0	0	0	0	1	0	1	1
04:45 PM	0	0	**1**	**1**	0	0	0	0	0	0	0	0	0	0	0	0	1
Total Volume	0	0	1	1	0	1	0	1	1	0	0	1	0	2	0	2	5
% App. Total	0	0	100		0	100	0		100	0	0		0	100	0		
PHF	.000	.000	.250	.250	.000	.250	.000	.250	.250	.000	.000	.250	.000	.500	.000	.500	.625

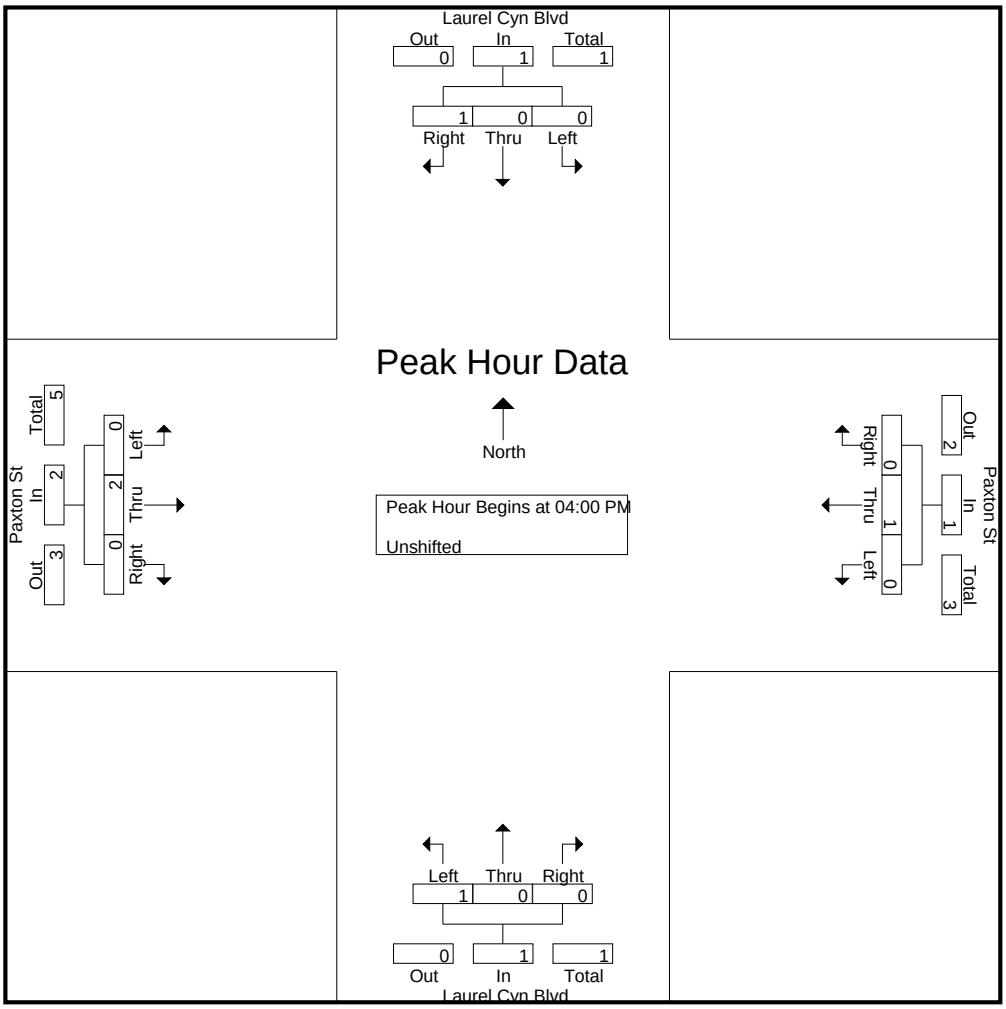

CITY TRAFFIC COUNTERS

626.991.7522

www.ctcounters.com

File Name : Paxton_Haddon
Site Code : 00000000
Start Date : 3/26/2015
Page No : 1

Groups Printed- Unshifted

	Haddon St Southbound			Paxton St Westbound			Haddon St Northbound			Paxton St Eastbound			
Start Time	Left	Thru	Right	Left	Thru	Right	Left	Thru	Right	Left	Thru	Right	Int. Total
07:00 AM	0	1	1	11	157	2	2	0	9	0	134	6	323
07:15 AM	0	0	3	10	170	1	9	0	18	0	175	6	392
07:30 AM	1	0	1	12	181	0	0	0	28	2	185	3	413
07:45 AM	0	0	1	20	202	1	11	0	25	2	202	10	474
Total	1	1	6	53	710	4	22	0	80	4	696	25	1602
08:00 AM	0	0	3	23	178	3	4	0	13	5	153	6	388
08:15 AM	0	0	1	12	126	0	5	0	11	1	157	4	317
08:30 AM	1	2	0	11	128	0	1	0	10	3	120	3	279
08:45 AM	0	0	1	9	103	0	2	0	9	2	112	5	243
Total	1	2	5	55	535	3	12	0	43	11	542	18	1227
09:00 AM	1	0	0	0	88	0	1	0	3	0	71	0	164
09:15 AM	0	0	0	8	94	2	0	0	5	0	85	2	196
09:30 AM	0	0	2	3	78	1	0	0	6	1	100	0	191
09:45 AM	1	0	1	9	82	0	5	0	8	0	107	4	217
Total	2	0	3	20	342	3	6	0	22	1	363	6	768
12:00 PM	0	1	1	6	120	0	2	0	13	3	109	5	260
12:15 PM	1	0	2	11	120	0	2	0	11	3	97	5	252
12:30 PM	1	0	0	6	104	0	1	0	11	0	116	3	242
12:45 PM	0	1	0	6	102	3	0	0	5	1	116	7	241
Total	2	2	3	29	446	3	5	0	40	7	438	20	995
01:00 PM	1	0	2	10	115	0	1	0	8	2	120	7	266
01:15 PM	0	0	2	10	117	1	0	1	6	2	110	6	255
01:30 PM	0	0	2	9	114	0	3	0	9	2	112	3	254
01:45 PM	1	0	1	16	117	1	4	0	5	0	107	1	253
Total	2	0	7	45	463	2	8	1	28	6	449	17	1028
03:00 PM	0	0	2	12	131	1	4	0	15	3	145	5	318
03:15 PM	0	0	1	13	133	1	0	0	13	2	183	10	356
03:30 PM	0	0	2	12	143	1	2	0	14	1	178	6	359
03:45 PM	1	1	0	17	164	1	2	0	9	1	160	6	362
Total	1	1	5	54	571	4	8	0	51	7	666	27	1395
04:00 PM	0	0	1	16	143	0	1	0	9	0	171	4	345
04:15 PM	0	0	0	15	149	1	3	0	9	1	202	2	382
04:30 PM	2	0	0	9	153	1	2	0	11	1	154	10	343
04:45 PM	0	0	1	13	171	1	2	0	15	0	193	7	403
Total	2	0	2	53	616	3	8	0	44	2	720	23	1473
05:00 PM	1	0	1	17	140	0	1	0	19	3	220	6	408
05:15 PM	2	0	2	11	149	3	3	0	14	5	224	11	424
05:30 PM	1	0	2	22	147	2	1	0	21	4	237	10	447
05:45 PM	1	0	0	18	187	2	5	1	15	6	223	7	465
Total	5	0	5	68	623	7	10	1	69	18	904	34	1744
Grand Total	16	6	36	377	4306	29	79	2	377	56	4778	170	10232
Apprch %	27.6	10.3	62.1	8	91.4	0.6	17.2	0.4	82.3	1.1	95.5	3.4	
Total %	0.2	0.1	0.4	3.7	42.1	0.3	0.8	0	3.7	0.5	46.7	1.7	

CITY TRAFFIC COUNTERS

626.991.7522

www.ctcounters.com

File Name : Paxton_Haddon
Site Code : 00000000
Start Date : 3/26/2015
Page No : 2

	Haddon St Southbound				Paxton St Westbound				Haddon St Northbound				Paxton St Eastbound				
Start Time	Left	Thru	Right	App. Total	Left	Thru	Right	App. Total	Left	Thru	Right	App. Total	Left	Thru	Right	App. Total	Int. Total
Peak Hour Analysis From 07:00 AM to 09:45 AM - Peak 1 of 1																	
Peak Hour for Entire Intersection Begins at 07:15 AM																	
07:15 AM	0	0	**3**	**3**	10	170	1	181	9	0	18	27	0	175	6	181	392
07:30 AM	**1**	0	1	2	12	181	0	193	0	0	**28**	28	2	185	3	190	413
07:45 AM	0	0	1	1	20	**202**	1	**223**	**11**	0	25	**36**	2	**202**	**10**	**214**	**474**
08:00 AM	0	0	3	3	**23**	178	**3**	204	4	0	13	17	**5**	153	6	164	388
Total Volume	1	0	8	9	65	731	5	801	24	0	84	108	9	715	25	749	1667
% App. Total	11.1	0	88.9		8.1	91.3	0.6		22.2	0	77.8		1.2	95.5	3.3		
PHF	.250	.000	.667	.750	.707	.905	.417	.898	.545	.000	.750	.750	.450	.885	.625	.875	.879

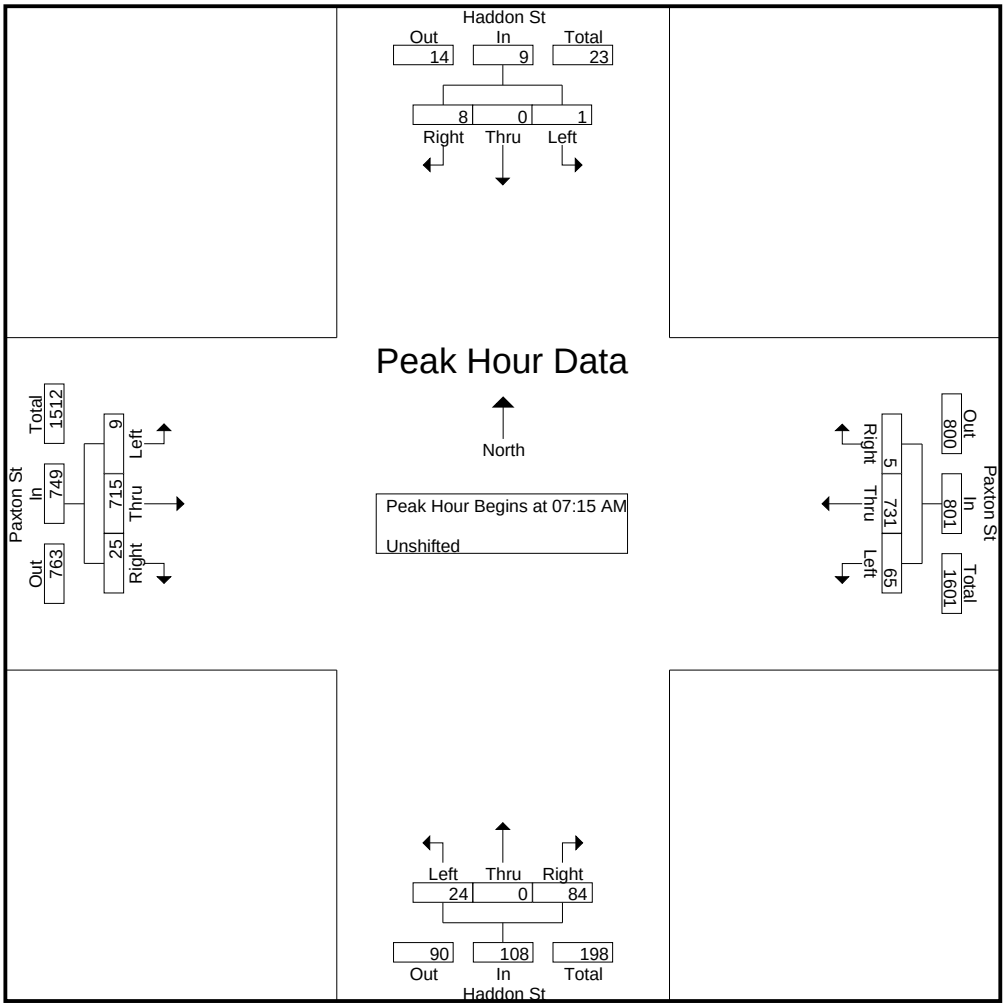

CITY TRAFFIC COUNTERS

626.991.7522

www.ctcounters.com

File Name : Paxton_Haddon
Site Code : 00000000
Start Date : 3/26/2015
Page No : 3

	Haddon St Southbound				Paxton St Westbound				Haddon St Northbound				Paxton St Eastbound				
Start Time	Left	Thru	Right	App. Total	Left	Thru	Right	App. Total	Left	Thru	Right	App. Total	Left	Thru	Right	App. Total	Int. Total
Peak Hour Analysis From 10:00 AM to 01:45 PM - Peak 1 of 1																	
Peak Hour for Entire Intersection Begins at 01:00 PM																	
01:00 PM	**1**	0	**2**	**3**	10	115	0	125	1	0	8	9	**2**	**120**	**7**	**129**	**266**
01:15 PM	0	0	2	2	10	**117**	**1**	128	0	**1**	6	7	2	110	6	118	255
01:30 PM	0	0	2	2	9	114	0	123	3	0	**9**	**12**	2	112	3	117	254
01:45 PM	1	0	1	2	**16**	117	1	**134**	**4**	0	5	9	0	107	1	108	253
Total Volume	2	0	7	9	45	463	2	510	8	1	28	37	6	449	17	472	1028
% App. Total	22.2	0	77.8		8.8	90.8	0.4		21.6	2.7	75.7		1.3	95.1	3.6		
PHF	.500	.000	.875	.750	.703	.989	.500	.951	.500	.250	.778	.771	.750	.935	.607	.915	.966

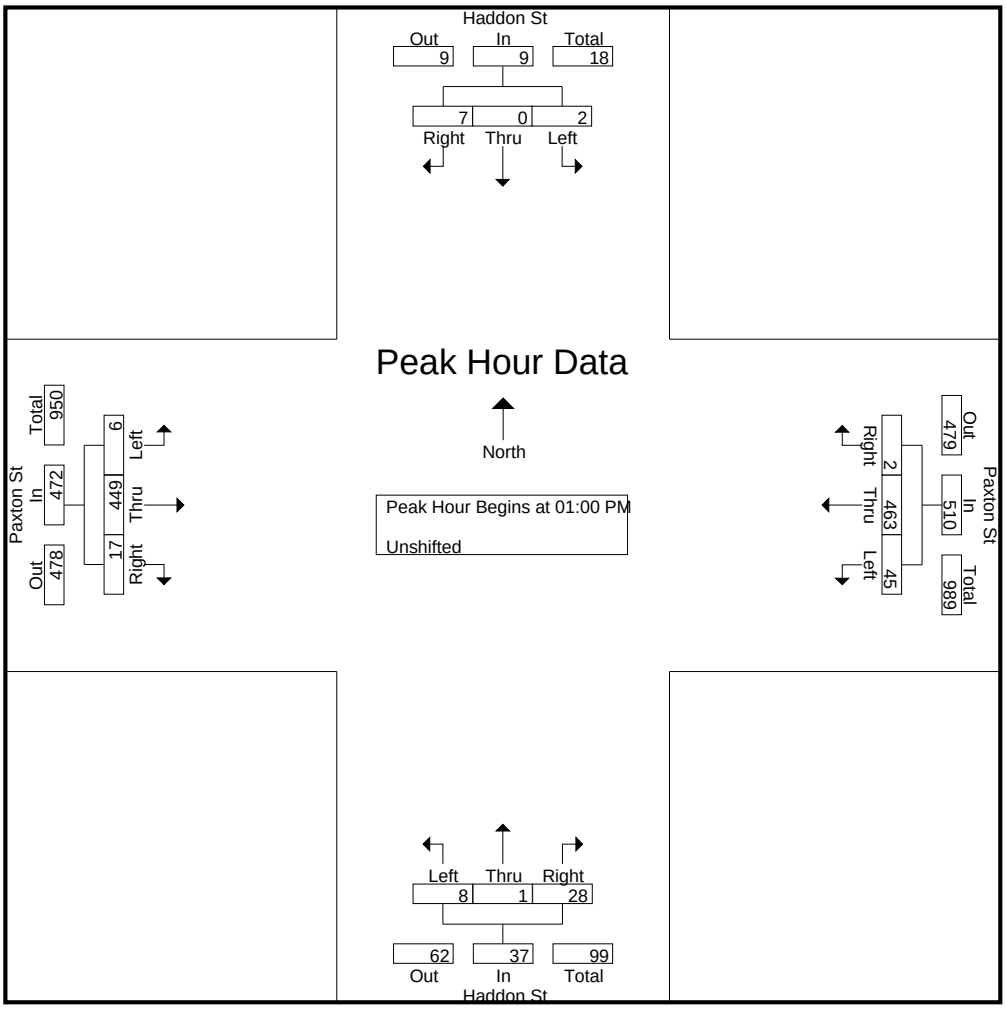

CITY TRAFFIC COUNTERS

626.991.7522

www.ctcounters.com

File Name : Paxton_Haddon
Site Code : 00000000
Start Date : 3/26/2015
Page No : 4

	Haddon St Southbound				Paxton St Westbound				Haddon St Northbound				Paxton St Eastbound				
Start Time	Left	Thru	Right	App. Total	Left	Thru	Right	App. Total	Left	Thru	Right	App. Total	Left	Thru	Right	App. Total	Int. Total
Peak Hour Analysis From 02:00 PM to 05:45 PM - Peak 1 of 1																	
Peak Hour for Entire Intersection Begins at 05:00 PM																	
05:00 PM	1	0	1	2	17	140	0	157	1	0	19	20	3	220	6	229	408
05:15 PM	**2**	0	**2**	**4**	11	149	**3**	163	3	0	14	17	5	224	**11**	240	424
05:30 PM	1	0	2	3	**22**	147	2	171	1	0	**21**	**22**	4	**237**	10	**251**	447
05:45 PM	1	0	0	1	18	**187**	2	**207**	**5**	**1**	15	21	**6**	223	7	236	**465**
Total Volume	5	0	5	10	68	623	7	698	10	1	69	80	18	904	34	956	1744
% App. Total	50	0	50		9.7	89.3	1		12.5	1.2	86.2		1.9	94.6	3.6		
PHF	.625	.000	.625	.625	.773	.833	.583	.843	.500	.250	.821	.909	.750	.954	.773	.952	.938

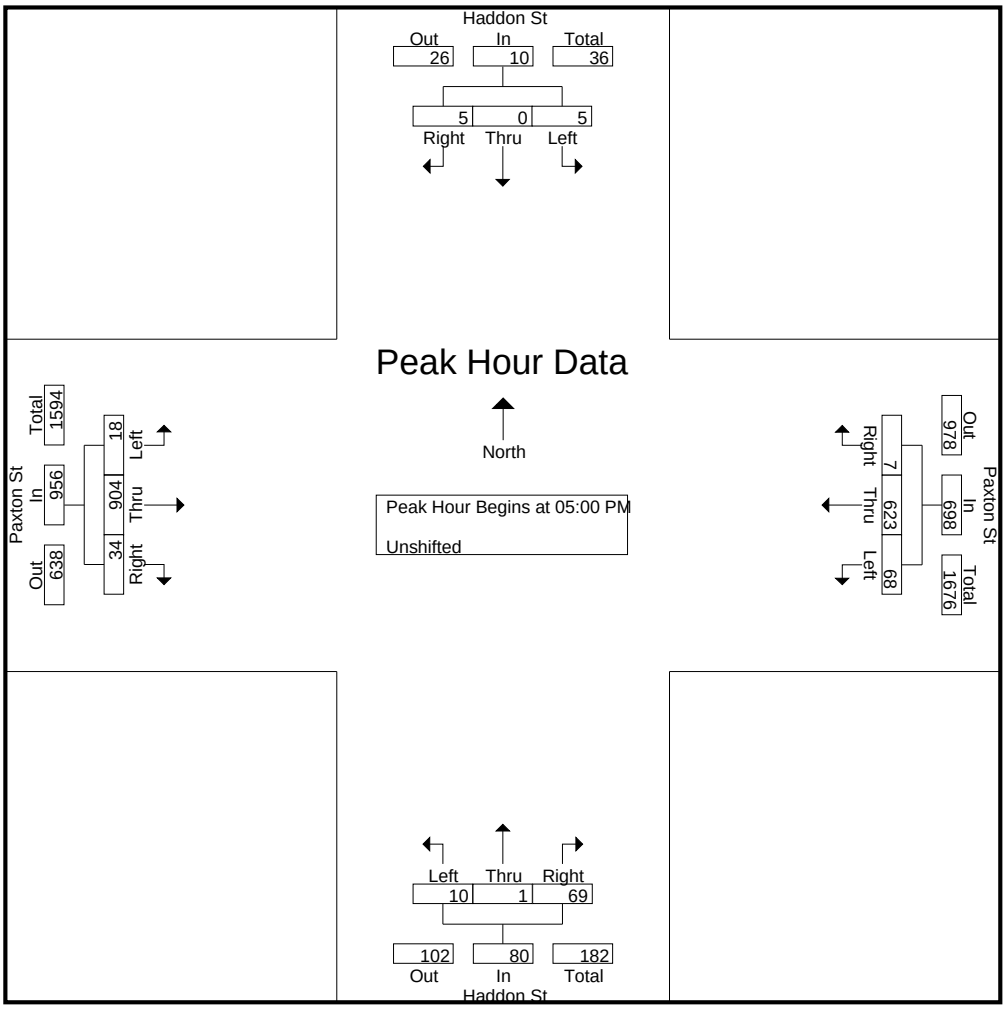

CITY TRAFFIC COUNTERS

626.991.7522

www.ctcounters.com

File Name : Paxton_Haddon_Motorcycles
Site Code : 00000000
Start Date : 3/26/2015
Page No : 1

Groups Printed- Bank 2

	Haddon St Southbound			Paxton St Westbound			Haddon St Northbound			Paxton St Eastbound			
Start Time	Left	Thru	Right	Left	Thru	Right	Left	Thru	Right	Left	Thru	Right	Int. Total
07:00 AM	0	0	0	0	0	0	0	0	0	0	1	0	1
07:15 AM	0	0	0	0	1	0	0	0	0	0	0	0	1
07:30 AM	0	0	0	0	2	0	0	0	0	0	0	0	2
07:45 AM	0	0	0	0	0	0	0	0	0	0	1	0	1
Total	0	0	0	0	3	0	0	0	0	0	2	0	5
08:00 AM	0	0	0	0	0	0	0	0	0	0	1	0	1
08:30 AM	0	0	0	0	0	0	0	0	0	0	1	0	1
Total	0	0	0	0	0	0	0	0	0	0	2	0	2
09:45 AM	0	0	0	0	2	0	0	0	0	0	0	0	2
Total	0	0	0	0	2	0	0	0	0	0	0	0	2
12:15 PM	0	0	0	0	0	0	0	0	0	0	1	0	1
12:45 PM	0	0	0	0	0	0	0	0	0	0	1	0	1
Total	0	0	0	0	0	0	0	0	0	0	2	0	2
01:00 PM	0	0	0	0	0	0	0	0	0	0	1	0	1
01:15 PM	0	0	0	0	1	0	0	0	0	0	0	0	1
01:30 PM	0	0	0	0	1	0	0	0	0	0	0	0	1
Total	0	0	0	0	2	0	0	0	0	0	1	0	3
03:15 PM	0	0	0	0	1	0	0	0	0	0	0	0	1
03:30 PM	0	0	0	0	1	0	0	0	0	0	1	0	2
03:45 PM	0	0	0	0	0	0	0	0	0	0	3	0	3
Total	0	0	0	0	2	0	0	0	0	0	4	0	6
04:30 PM	0	0	0	0	4	0	0	0	0	0	0	0	4
04:45 PM	0	0	0	0	2	0	0	0	0	0	0	0	2
Total	0	0	0	0	6	0	0	0	0	0	0	0	6
05:00 PM	0	0	0	0	1	0	0	0	0	0	0	0	1
05:15 PM	0	0	0	0	2	0	0	0	0	0	2	0	4
05:30 PM	0	0	0	0	1	0	0	0	0	0	1	0	2
05:45 PM	0	0	1	0	0	0	0	0	0	1	0	0	2
Total	0	0	1	0	4	0	0	0	0	1	3	0	9
Grand Total	0	0	1	0	19	0	0	0	0	1	14	0	35
Apprch %	0	0	100	0	100	0	0	0	0	6.7	93.3	0	
Total %	0	0	2.9	0	54.3	0	0	0	0	2.9	40	0	

CITY TRAFFIC COUNTERS

626.991.7522

www.ctcounters.com

File Name : Paxton_Haddon_Motorcycles
Site Code : 00000000
Start Date : 3/26/2015
Page No : 2

	Haddon St Southbound				Paxton St Westbound				Haddon St Northbound				Paxton St Eastbound				
Start Time	Left	Thru	Right	App. Total	Left	Thru	Right	App. Total	Left	Thru	Right	App. Total	Left	Thru	Right	App. Total	Int. Total
Peak Hour Analysis From 07:00 AM to 09:45 AM - Peak 1 of 1																	
Peak Hour for Entire Intersection Begins at 07:00 AM																	
07:00 AM	0	0	0	0	0	0	0	0	0	0	0	0	0	**1**	0	**1**	1
07:15 AM	0	0	0	0	0	1	0	1	0	0	0	0	0	0	0	0	1
07:30 AM	0	0	0	0	0	**2**	0	**2**	0	0	0	0	0	0	0	0	**2**
07:45 AM	0	0	0	0	0	0	0	0	0	0	0	0	0	1	0	1	1
Total Volume	0	0	0	0	0	3	0	3	0	0	0	0	0	2	0	2	5
% App. Total	0	0	0		0	100	0		0	0	0		0	100	0		
PHF	.000	.000	.000	.000	.000	.375	.000	.375	.000	.000	.000	.000	.000	.500	.000	.500	.625

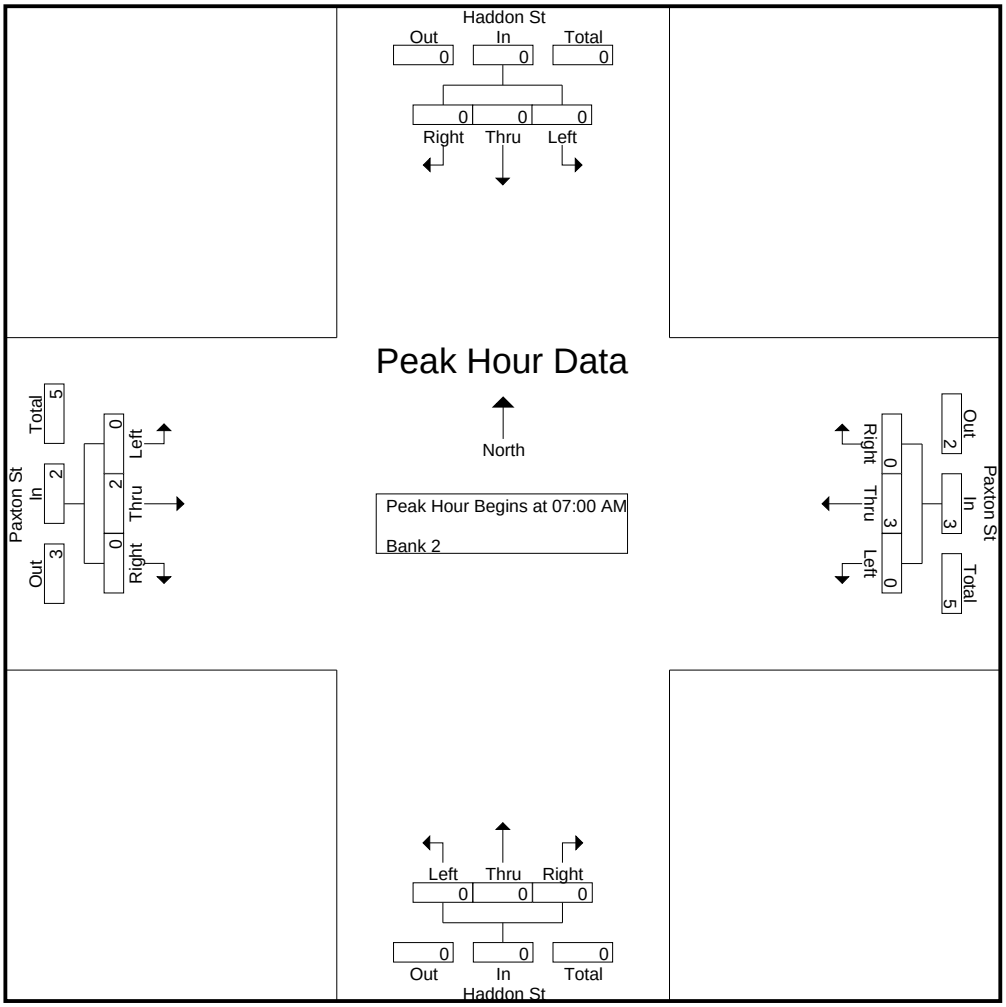

CITY TRAFFIC COUNTERS

626.991.7522

www.ctcounters.com

File Name : Paxton_Haddon_Motorcycles
Site Code : 00000000
Start Date : 3/26/2015
Page No : 3

	Haddon St Southbound				Paxton St Westbound				Haddon St Northbound				Paxton St Eastbound				
Start Time	Left	Thru	Right	App. Total	Left	Thru	Right	App. Total	Left	Thru	Right	App. Total	Left	Thru	Right	App. Total	Int. Total
Peak Hour Analysis From 10:00 AM to 01:45 PM - Peak 1 of 1																	
Peak Hour for Entire Intersection Begins at 12:45 PM																	
12:45 PM	0	0	0	0	0	0	0	0	0	0	0	0	0	**1**	0	**1**	**1**
01:00 PM	0	0	0	0	0	0	0	0	0	0	0	0	0	1	0	1	1
01:15 PM	0	0	0	0	0	**1**	0	**1**	0	0	0	0	0	0	0	0	1
01:30 PM	0	0	0	0	0	1	0	1	0	0	0	0	0	0	0	0	1
Total Volume	0	0	0	0	0	2	0	2	0	0	0	0	0	2	0	2	4
% App. Total	0	0	0		0	100	0		0	0	0		0	100	0		
PHF	.000	.000	.000	.000	.000	.500	.000	.500	.000	.000	.000	.000	.000	.500	.000	.500	1.00

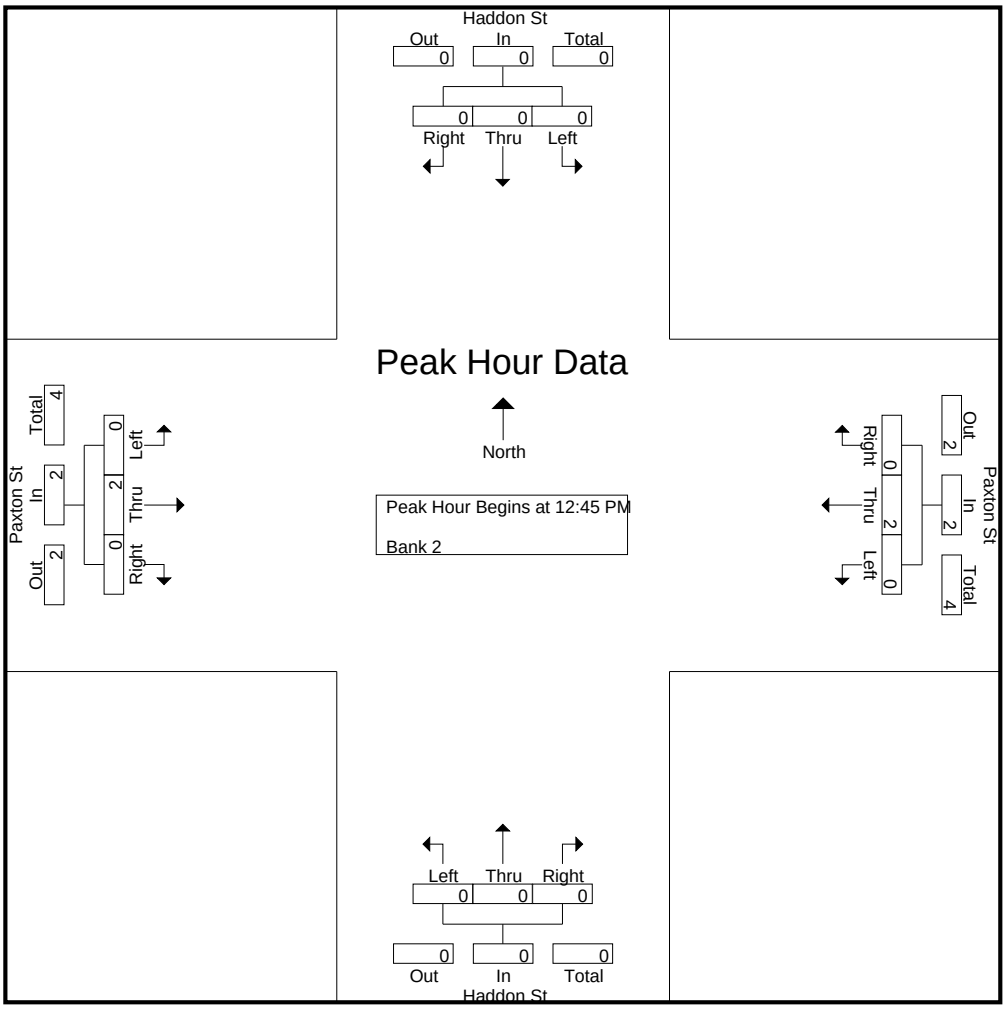

CITY TRAFFIC COUNTERS

626.991.7522

www.ctcounters.com

File Name : Paxton_Haddon_Motorcycles
Site Code : 00000000
Start Date : 3/26/2015
Page No : 4

	Haddon St Southbound				Paxton St Westbound				Haddon St Northbound				Paxton St Eastbound				
Start Time	Left	Thru	Right	App. Total	Left	Thru	Right	App. Total	Left	Thru	Right	App. Total	Left	Thru	Right	App. Total	Int. Total
Peak Hour Analysis From 02:00 PM to 05:45 PM - Peak 1 of 1																	
Peak Hour for Entire Intersection Begins at 04:30 PM																	
04:30 PM	0	0	0	0	0	**4**	0	**4**	0	0	0	0	0	0	0	0	**4**
04:45 PM	0	0	0	0	0	2	0	2	0	0	0	0	0	0	0	0	2
05:00 PM	0	0	0	0	0	1	0	1	0	0	0	0	0	0	0	0	1
05:15 PM	0	0	0	0	0	2	0	2	0	0	0	0	0	**2**	0	**2**	4
Total Volume	0	0	0	0	0	9	0	9	0	0	0	0	0	2	0	2	11
% App. Total	0	0	0		0	100	0		0	0	0		0	100	0		
PHF	.000	.000	.000	.000	.000	.563	.000	.563	.000	.000	.000	.000	.000	.250	.000	.250	.688

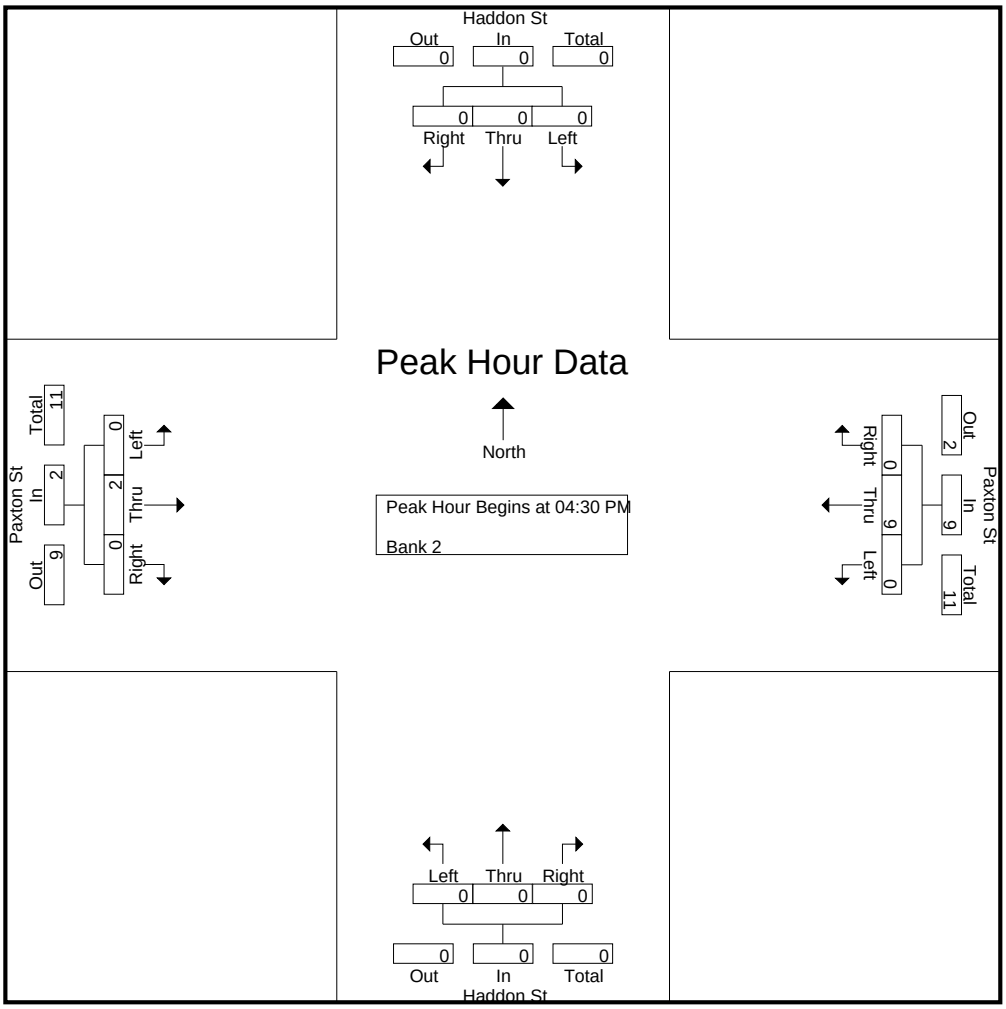

CITY TRAFFIC COUNTERS

626.991.7522

www.ctcounters.com

File Name : Paxton_Haddon_Buses
Site Code : 00000000
Start Date : 3/26/2015
Page No : 1

Groups Printed- Bank 1

	Haddon St Southbound			Paxton St Westbound			Haddon St Northbound			Paxton St Eastbound			
Start Time	Left	Thru	Right	Left	Thru	Right	Left	Thru	Right	Left	Thru	Right	Int. Total
07:00 AM	0	0	0	0	3	0	0	0	0	0	2	0	5
07:30 AM	0	0	0	0	1	0	0	0	0	0	0	0	1
07:45 AM	0	0	0	0	1	0	0	0	0	0	1	0	2
Total	0	0	0	0	5	0	0	0	0	0	3	0	8
08:00 AM	0	0	0	0	0	0	0	0	0	0	2	0	2
08:15 AM	0	0	0	0	0	0	0	0	0	0	5	0	5
08:30 AM	0	0	0	0	0	0	0	0	0	0	5	0	5
08:45 AM	0	0	0	1	0	0	0	0	0	0	1	0	2
Total	0	0	0	1	0	0	0	0	0	0	13	0	14
09:00 AM	0	0	0	0	0	0	0	0	0	0	5	0	5
09:15 AM	0	0	0	0	0	0	0	0	0	0	2	0	2
09:30 AM	0	0	0	0	0	0	0	0	0	0	3	0	3
09:45 AM	0	0	0	0	0	0	0	0	0	0	1	0	1
Total	0	0	0	0	0	0	0	0	0	0	11	0	11
12:00 PM	0	0	0	0	1	0	0	0	0	0	1	0	2
12:15 PM	0	0	0	0	0	0	0	0	0	0	1	0	1
12:30 PM	0	0	0	0	0	0	0	0	0	0	1	0	1
12:45 PM	0	0	0	0	2	0	0	0	0	0	0	0	2
Total	0	0	0	0	3	0	0	0	0	0	3	0	6
01:15 PM	0	0	0	0	3	0	0	0	0	0	0	0	3
01:30 PM	0	0	0	0	4	0	0	0	0	0	1	0	5
01:45 PM	0	0	0	0	2	0	0	0	0	0	0	0	2
Total	0	0	0	0	9	0	0	0	0	0	1	0	10
03:00 PM	0	0	0	0	1	0	0	0	0	0	1	0	2
03:15 PM	0	0	0	0	1	0	0	0	0	0	8	0	9
03:30 PM	0	0	0	1	1	0	0	0	0	0	3	0	5
03:45 PM	0	0	0	0	1	0	0	0	0	0	4	0	5
Total	0	0	0	1	4	0	0	0	0	0	16	0	21
04:00 PM	0	0	0	0	1	0	0	0	0	0	4	0	5
04:15 PM	0	0	0	0	0	0	0	0	0	0	4	0	4
04:30 PM	0	0	0	0	0	0	0	0	0	0	2	0	2
04:45 PM	0	0	0	0	1	0	0	0	0	0	3	0	4
Total	0	0	0	0	2	0	0	0	0	0	13	0	15
05:00 PM	0	0	0	0	0	0	0	0	0	0	4	0	4
05:15 PM	0	0	0	0	0	0	0	0	0	0	6	0	6
05:30 PM	0	0	0	0	0	0	0	0	0	0	4	1	5
05:45 PM	0	0	0	0	1	0	0	0	0	0	2	0	3
Total	0	0	0	0	1	0	0	0	0	0	16	1	18
Grand Total	0	0	0	2	24	0	0	0	0	0	76	1	103
Apprch %	0	0	0	7.7	92.3	0	0	0	0	0	98.7	1.3	
Total %	0	0	0	1.9	23.3	0	0	0	0	0	73.8	1	

CITY TRAFFIC COUNTERS

626.991.7522

www.ctcounters.com

File Name : Paxton_Haddon_Buses
Site Code : 00000000
Start Date : 3/26/2015
Page No : 2

	Haddon St Southbound				Paxton St Westbound				Haddon St Northbound				Paxton St Eastbound				
Start Time	Left	Thru	Right	App. Total	Left	Thru	Right	App. Total	Left	Thru	Right	App. Total	Left	Thru	Right	App. Total	Int. Total
Peak Hour Analysis From 07:00 AM to 09:45 AM - Peak 1 of 1																	
Peak Hour for Entire Intersection Begins at 08:15 AM																	
08:15 AM	0	0	0	0	0	0	0	0	0	0	0	0	0	**5**	0	**5**	**5**
08:30 AM	0	0	0	0	0	0	0	0	0	0	0	0	0	5	0	5	5
08:45 AM	0	0	0	0	**1**	0	0	**1**	0	0	0	0	0	1	0	1	2
09:00 AM	0	0	0	0	0	0	0	0	0	0	0	0	0	5	0	5	5
Total Volume	0	0	0	0	1	0	0	1	0	0	0	0	0	16	0	16	17
% App. Total	0	0	0		100	0	0		0	0	0		0	100	0		
PHF	.000	.000	.000	.000	.250	.000	.000	.250	.000	.000	.000	.000	.000	.800	.000	.800	.850

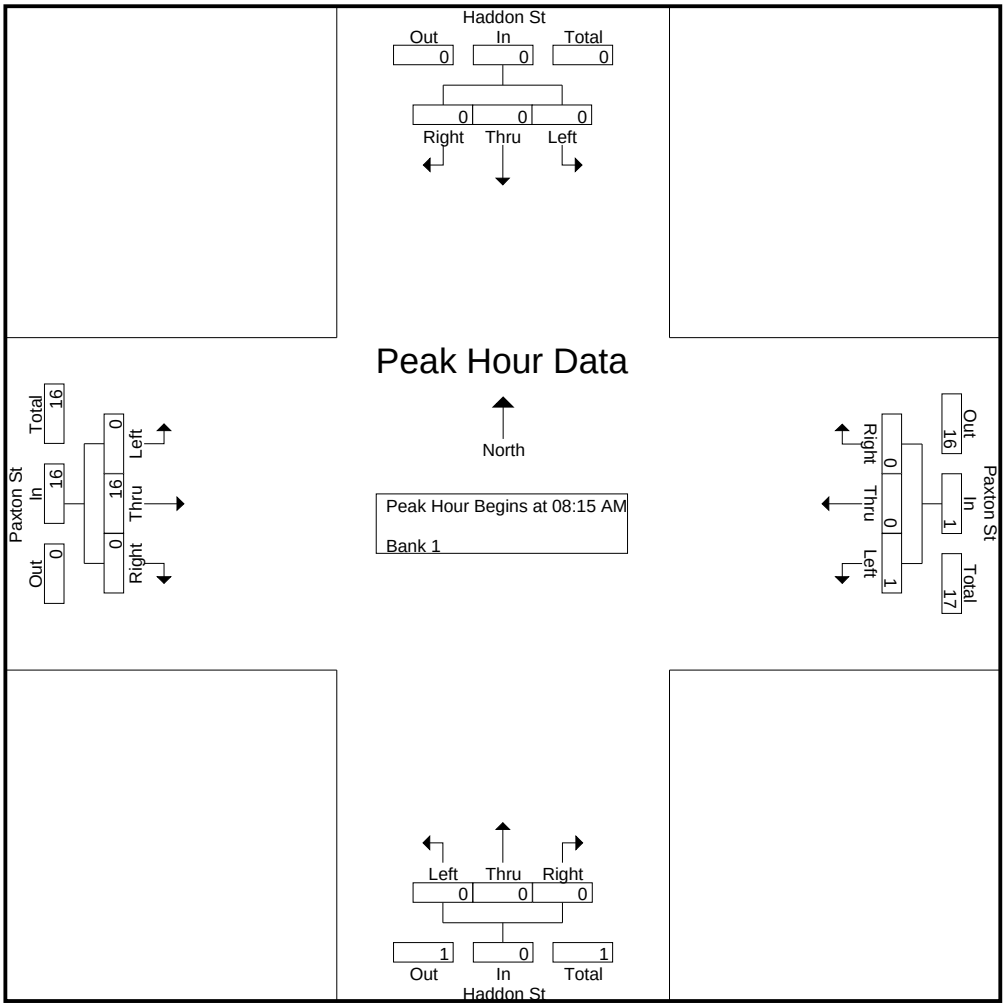

CITY TRAFFIC COUNTERS

626.991.7522

www.ctcounters.com

File Name : Paxton_Haddon_Buses
Site Code : 00000000
Start Date : 3/26/2015
Page No : 3

	Haddon St Southbound				Paxton St Westbound				Haddon St Northbound				Paxton St Eastbound				
Start Time	Left	Thru	Right	App. Total	Left	Thru	Right	App. Total	Left	Thru	Right	App. Total	Left	Thru	Right	App. Total	Int. Total
Peak Hour Analysis From 10:00 AM to 01:45 PM - Peak 1 of 1																	
Peak Hour for Entire Intersection Begins at 12:45 PM																	
12:45 PM	0	0	0	0	0	2	0	2	0	0	0	0	0	0	0	0	2
01:00 PM	0	0	0	0	0	0	0	0	0	0	0	0	0	0	0	0	0
01:15 PM	0	0	0	0	0	3	0	3	0	0	0	0	0	0	0	0	3
01:30 PM	0	0	0	0	0	**4**	0	**4**	0	0	0	0	0	**1**	0	**1**	**5**
Total Volume	0	0	0	0	0	9	0	9	0	0	0	0	0	1	0	1	10
% App. Total	0	0	0		0	100	0		0	0	0		0	100	0		
PHF	.000	.000	.000	.000	.000	.563	.000	.563	.000	.000	.000	.000	.000	.250	.000	.250	.500

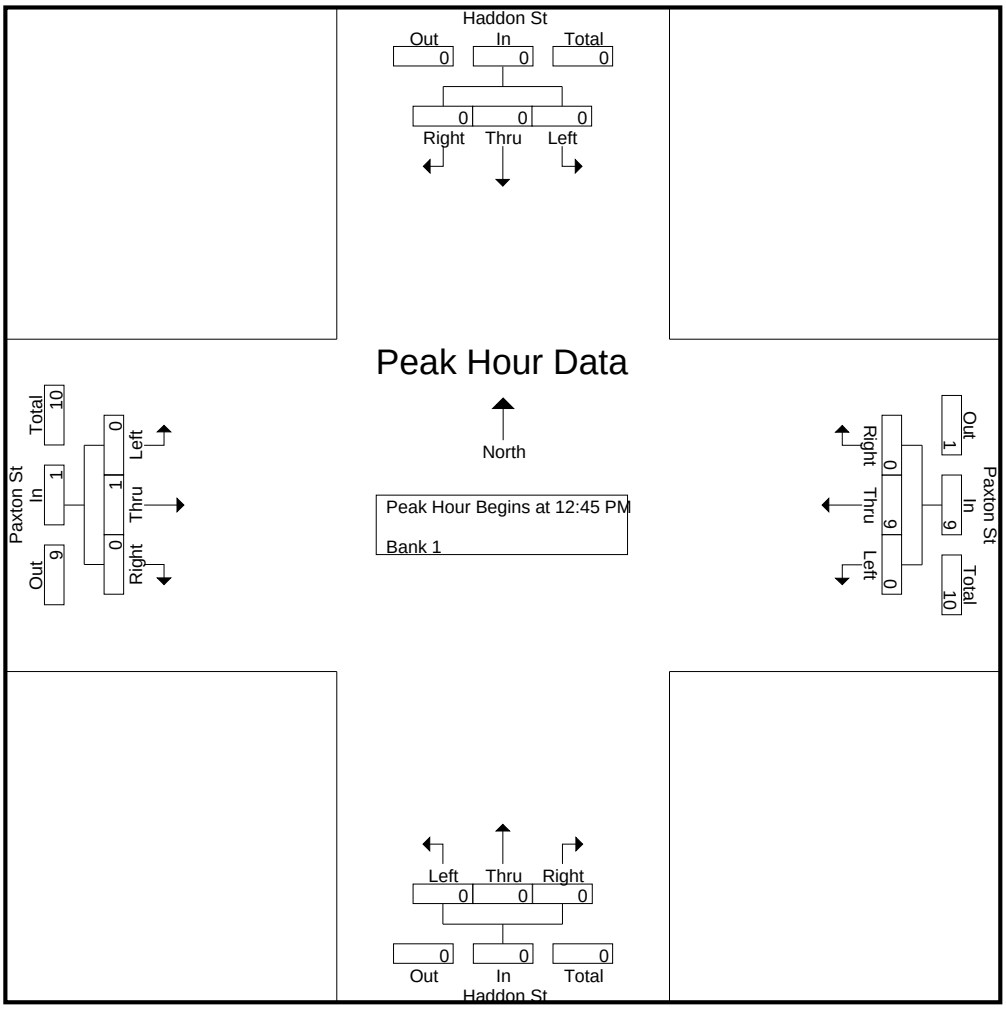

CITY TRAFFIC COUNTERS

626.991.7522

www.ctcounters.com

File Name : Paxton_Haddon_Buses
Site Code : 00000000
Start Date : 3/26/2015
Page No : 4

	Haddon St Southbound				Paxton St Westbound				Haddon St Northbound				Paxton St Eastbound				
Start Time	Left	Thru	Right	App. Total	Left	Thru	Right	App. Total	Left	Thru	Right	App. Total	Left	Thru	Right	App. Total	Int. Total
Peak Hour Analysis From 02:00 PM to 05:45 PM - Peak 1 of 1																	
Peak Hour for Entire Intersection Begins at 03:15 PM																	
03:15 PM	0	0	0	0	0	**1**	0	1	0	0	0	0	0	**8**	0	**8**	**9**
03:30 PM	0	0	0	0	**1**	1	0	**2**	0	0	0	0	0	3	0	3	5
03:45 PM	0	0	0	0	0	1	0	1	0	0	0	0	0	4	0	4	5
04:00 PM	0	0	0	0	0	1	0	1	0	0	0	0	0	4	0	4	5
Total Volume	0	0	0	0	1	4	0	5	0	0	0	0	0	19	0	19	24
% App. Total	0	0	0		20	80	0		0	0	0		0	100	0		
PHF	.000	.000	.000	.000	.250	1.00	.000	.625	.000	.000	.000	.000	.000	.594	.000	.594	.667

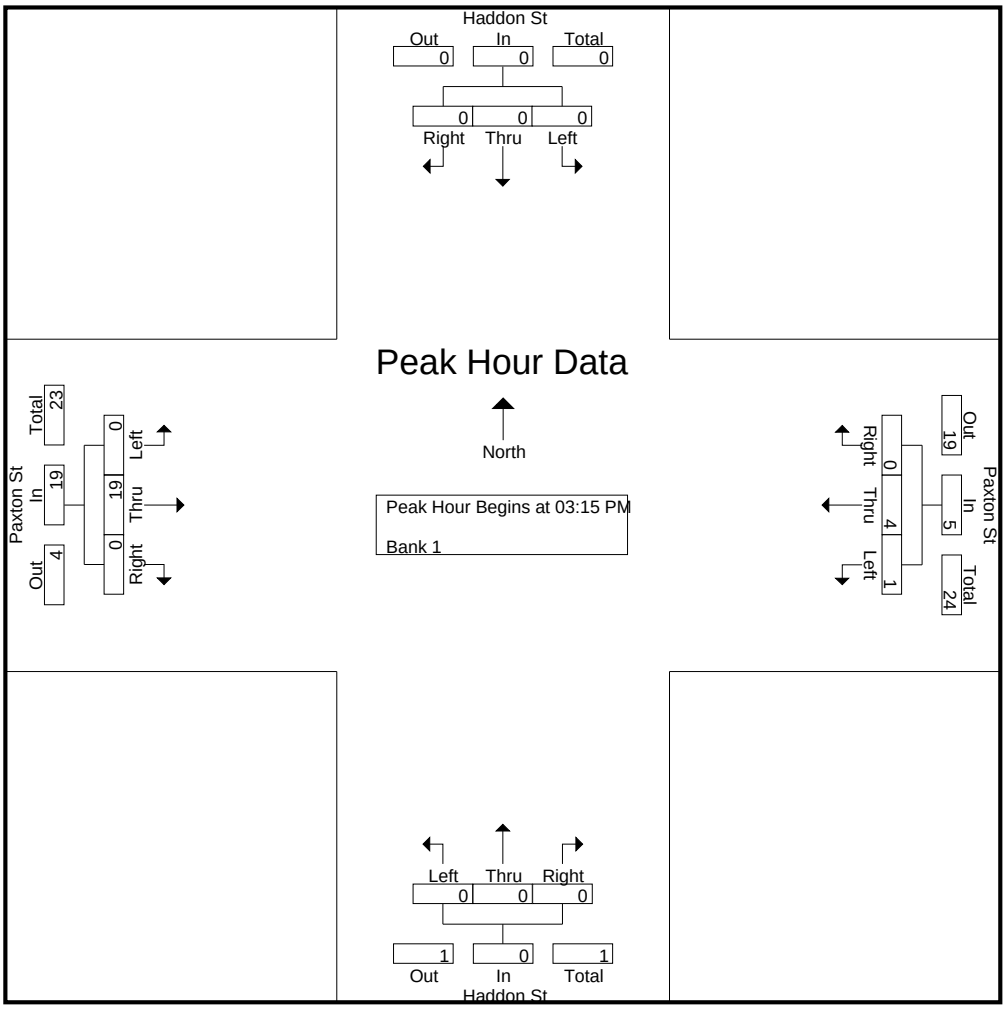

CITY TRAFFIC COUNTERS

626.991.7522

www.ctcounters.com

File Name : paxton_haddon_2axle
Site Code : 00000000
Start Date : 3/26/2015
Page No : 1

Groups Printed- Unshifted

	Haddon St Southbound			Paxton St Westbound			Haddon St Northbound			Paxton St Eastbound			
Start Time	Left	Thru	Right	Left	Thru	Right	Left	Thru	Right	Left	Thru	Right	Int. Total
07:00 AM	0	0	0	1	4	1	0	0	1	0	7	0	14
07:15 AM	0	0	0	0	5	0	0	0	0	0	3	0	8
07:30 AM	0	0	0	0	2	0	0	0	0	0	4	1	7
07:45 AM	0	0	0	0	3	0	0	0	0	0	3	0	6
Total	0	0	0	1	14	1	0	0	1	0	17	1	35
08:00 AM	0	0	0	0	4	0	0	0	0	0	4	0	8
08:15 AM	0	0	0	1	6	0	0	0	0	0	7	0	14
08:30 AM	0	0	0	1	1	0	0	0	0	0	7	0	9
08:45 AM	0	0	0	0	4	0	0	0	0	0	3	0	7
Total	0	0	0	2	15	0	0	0	0	0	21	0	38
09:00 AM	0	0	0	1	2	0	0	0	0	0	7	0	10
09:15 AM	0	0	0	2	5	1	0	0	0	0	3	0	11
09:30 AM	0	0	0	0	3	0	0	0	0	0	2	0	5
09:45 AM	0	0	0	0	2	0	0	0	0	0	0	0	2
Total	0	0	0	3	12	1	0	0	0	0	12	0	28
12:00 PM	0	0	0	1	3	0	0	0	0	0	5	1	10
12:15 PM	0	0	0	0	2	0	0	0	0	0	4	0	6
12:30 PM	0	0	0	0	2	0	0	0	0	0	1	0	3
12:45 PM	0	0	0	0	3	0	0	0	0	0	1	0	4
Total	0	0	0	1	10	0	0	0	0	0	11	1	23
01:00 PM	0	0	0	0	2	0	0	0	0	0	2	0	4
01:15 PM	0	0	0	0	2	0	0	1	0	0	2	0	5
01:30 PM	0	0	0	1	8	0	0	0	0	0	3	0	12
01:45 PM	0	0	0	1	6	0	0	0	0	0	5	0	12
Total	0	0	0	2	18	0	0	1	0	0	12	0	33
03:00 PM	0	0	0	0	6	0	0	0	1	0	6	0	13
03:15 PM	0	0	0	0	3	0	0	0	0	0	8	0	11
03:30 PM	0	0	0	0	2	0	0	0	0	0	5	0	7
03:45 PM	0	0	0	0	4	0	0	0	0	0	2	0	6
Total	0	0	0	0	15	0	0	0	1	0	21	0	37
04:00 PM	0	0	0	0	4	0	0	0	0	0	3	1	8
04:15 PM	0	0	0	0	6	0	0	0	0	0	2	0	8
04:30 PM	0	0	0	0	1	0	0	0	0	0	6	0	7
04:45 PM	0	0	0	0	2	0	0	0	0	0	3	0	5
Total	0	0	0	0	13	0	0	0	0	0	14	1	28
05:00 PM	0	0	0	0	2	0	0	0	0	1	3	0	6
05:15 PM	0	0	0	0	1	0	0	0	0	0	3	0	4
05:30 PM	0	0	0	0	0	0	0	0	0	0	4	0	4
05:45 PM	0	0	0	0	1	0	0	0	0	0	0	0	1
Total	0	0	0	0	4	0	0	0	0	1	10	0	15
Grand Total	0	0	0	9	101	2	0	1	2	1	118	3	237
Apprch %	0	0	0	8	90.2	1.8	0	33.3	66.7	0.8	96.7	2.5	
Total %	0	0	0	3.8	42.6	0.8	0	0.4	0.8	0.4	49.8	1.3	

CITY TRAFFIC COUNTERS

626.991.7522

www.ctcounters.com

File Name : paxton_haddon_2axle
Site Code : 00000000
Start Date : 3/26/2015
Page No : 2

	Haddon St Southbound				Paxton St Westbound				Haddon St Northbound				Paxton St Eastbound				
Start Time	Left	Thru	Right	App. Total	Left	Thru	Right	App. Total	Left	Thru	Right	App. Total	Left	Thru	Right	App. Total	Int. Total
Peak Hour Analysis From 07:00 AM to 09:45 AM - Peak 1 of 1																	
Peak Hour for Entire Intersection Begins at 08:15 AM																	
08:15 AM	0	0	0	0	**1**	**6**	0	**7**	0	0	0	0	0	**7**	0	**7**	**14**
08:30 AM	0	0	0	0	1	1	0	2	0	0	0	0	0	7	0	7	9
08:45 AM	0	0	0	0	0	4	0	4	0	0	0	0	0	3	0	3	7
09:00 AM	0	0	0	0	1	2	0	3	0	0	0	0	0	7	0	7	10
Total Volume	0	0	0	0	3	13	0	16	0	0	0	0	0	24	0	24	40
% App. Total	0	0	0		18.8	81.2	0		0	0	0		0	100	0		
PHF	.000	.000	.000	.000	.750	.542	.000	.571	.000	.000	.000	.000	.000	.857	.000	.857	.714

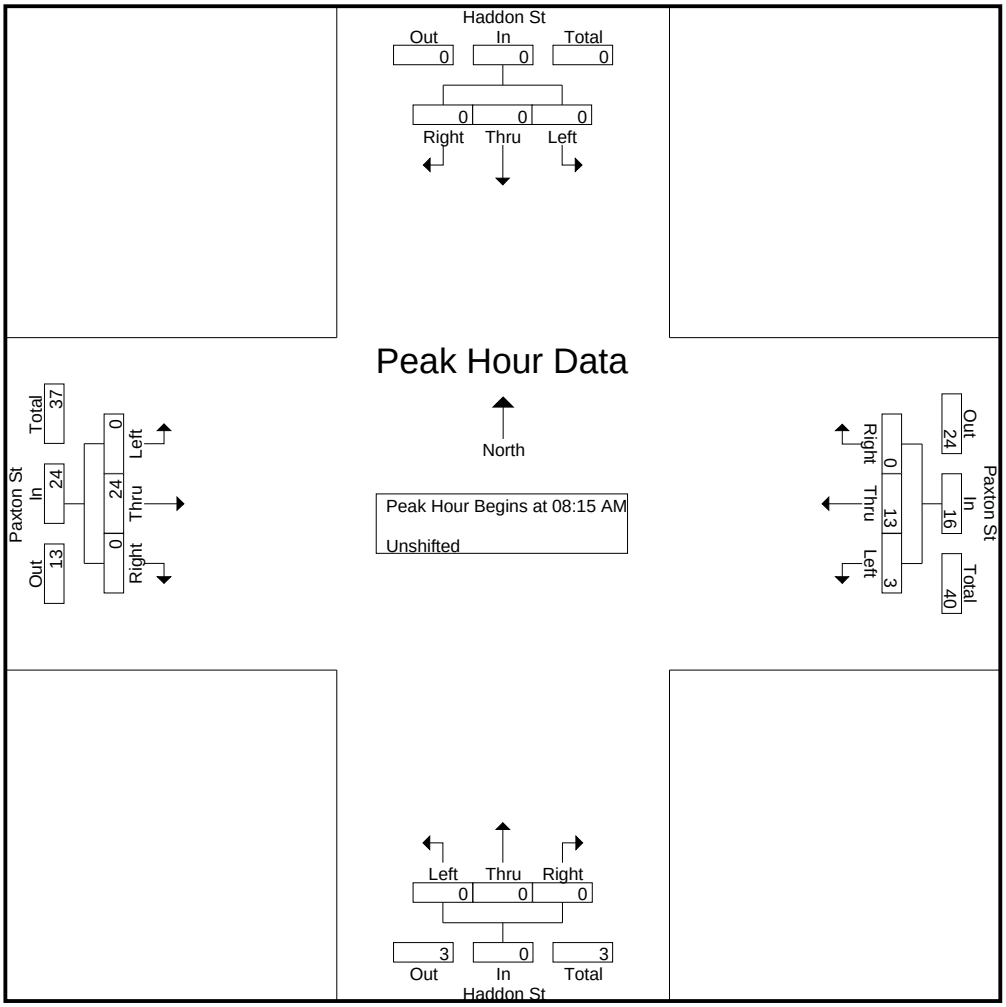

CITY TRAFFIC COUNTERS

626.991.7522

www.ctcounters.com

File Name : paxton_haddon_2axle
Site Code : 00000000
Start Date : 3/26/2015
Page No : 3

	Haddon St Southbound				Paxton St Westbound				Haddon St Northbound				Paxton St Eastbound				
Start Time	Left	Thru	Right	App. Total	Left	Thru	Right	App. Total	Left	Thru	Right	App. Total	Left	Thru	Right	App. Total	Int. Total
Peak Hour Analysis From 10:00 AM to 01:45 PM - Peak 1 of 1																	
Peak Hour for Entire Intersection Begins at 01:00 PM																	
01:00 PM	0	0	0	0	0	2	0	2	0	0	0	0	0	2	0	2	4
01:15 PM	0	0	0	0	0	2	0	2	0	**1**	0	**1**	0	2	0	2	5
01:30 PM	0	0	0	0	**1**	**8**	0	**9**	0	0	0	0	0	3	0	3	**12**
01:45 PM	0	0	0	0	1	6	0	7	0	0	0	0	0	**5**	0	**5**	12
Total Volume	0	0	0	0	2	18	0	20	0	1	0	1	0	12	0	12	33
% App. Total	0	0	0		10	90	0		0	100	0		0	100	0		
PHF	.000	.000	.000	.000	.500	.563	.000	.556	.000	.250	.000	.250	.000	.600	.000	.600	.688

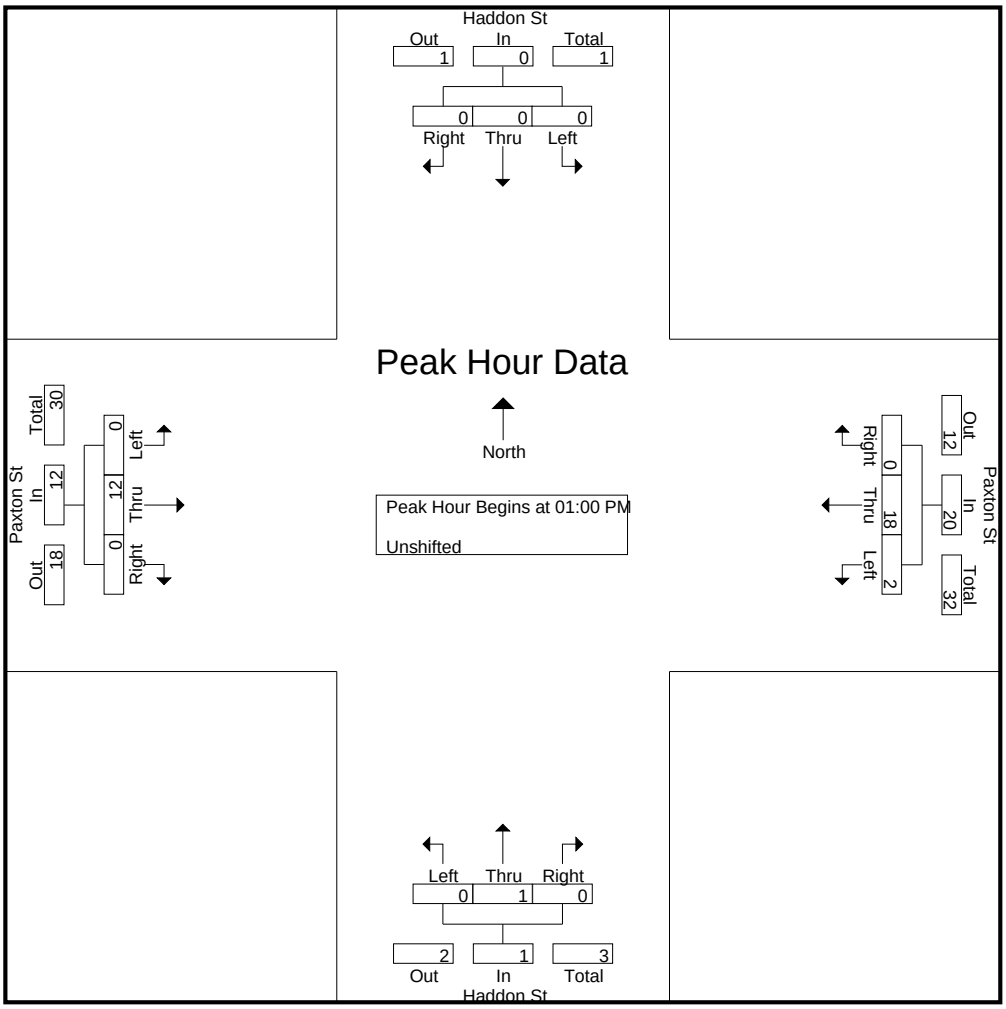

CITY TRAFFIC COUNTERS

626.991.7522

www.ctcounters.com

File Name : paxton_haddon_2axle
Site Code : 00000000
Start Date : 3/26/2015
Page No : 4

	Haddon St Southbound				Paxton St Westbound				Haddon St Northbound				Paxton St Eastbound				
Start Time	Left	Thru	Right	App. Total	Left	Thru	Right	App. Total	Left	Thru	Right	App. Total	Left	Thru	Right	App. Total	Int. Total
Peak Hour Analysis From 02:00 PM to 05:45 PM - Peak 1 of 1																	
Peak Hour for Entire Intersection Begins at 03:00 PM																	
03:00 PM	0	0	0	0	0	**6**	0	**6**	0	0	**1**	**1**	0	6	0	6	**13**
03:15 PM	0	0	0	0	0	3	0	3	0	0	0	0	0	**8**	0	**8**	11
03:30 PM	0	0	0	0	0	2	0	2	0	0	0	0	0	5	0	5	7
03:45 PM	0	0	0	0	0	4	0	4	0	0	0	0	0	2	0	2	6
Total Volume	0	0	0	0	0	15	0	15	0	0	1	1	0	21	0	21	37
% App. Total	0	0	0		0	100	0		0	0	100		0	100	0		
PHF	.000	.000	.000	.000	.000	.625	.000	.625	.000	.000	.250	.250	.000	.656	.000	.656	.712

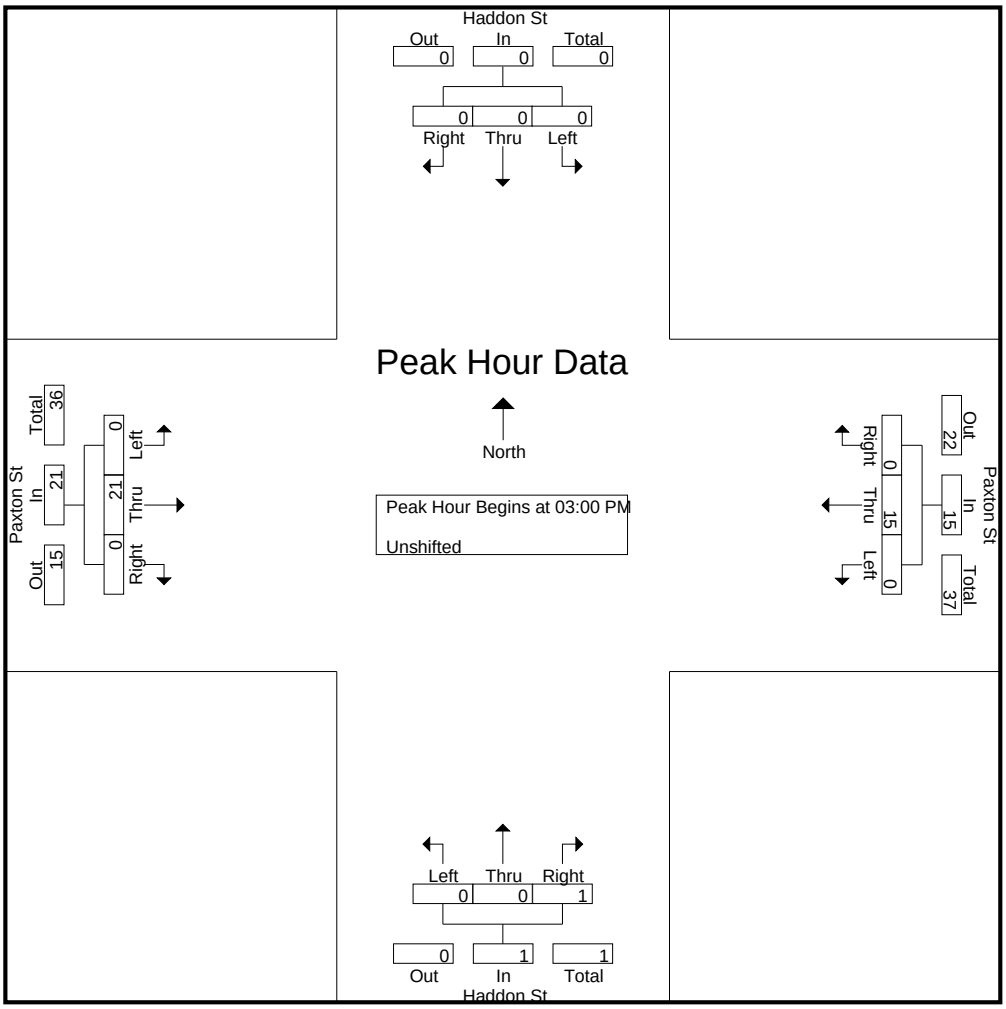

CITY TRAFFIC COUNTERS

626.991.7522

www.ctcounters.com

File Name : paxton_haddon_3axle
Site Code : 00000000
Start Date : 3/26/2015
Page No : 1

Groups Printed- Bank 1

	Haddon St Southbound			Paxton St Westbound			Haddon St Northbound			Paxton St Eastbound			
Start Time	Left	Thru	Right	Left	Thru	Right	Left	Thru	Right	Left	Thru	Right	Int. Total
07:15 AM	0	0	0	0	3	0	0	0	0	0	0	0	3
07:30 AM	0	0	0	0	0	0	0	0	0	0	1	0	1
Total	0	0	0	0	3	0	0	0	0	0	1	0	4
08:00 AM	0	0	0	0	0	0	0	0	0	0	1	0	1
08:30 AM	0	0	0	0	0	0	0	0	0	0	1	0	1
08:45 AM	0	0	0	0	1	0	0	0	0	0	1	0	2
Total	0	0	0	0	1	0	0	0	0	0	3	0	4
09:00 AM	0	0	0	0	0	0	0	0	0	0	1	0	1
09:30 AM	0	0	0	0	1	0	0	0	0	0	1	0	2
09:45 AM	0	0	0	0	1	0	0	0	0	0	2	0	3
Total	0	0	0	0	2	0	0	0	0	0	4	0	6
12:00 PM	0	0	0	0	1	0	0	0	0	0	2	0	3
12:45 PM	0	0	0	0	1	0	0	0	0	0	0	0	1
Total	0	0	0	0	2	0	0	0	0	0	2	0	4
01:15 PM	0	0	0	0	0	0	0	0	0	0	2	0	2
01:45 PM	0	0	0	0	0	0	0	0	0	0	2	0	2
Total	0	0	0	0	0	0	0	0	0	0	4	0	4
03:00 PM	0	0	0	0	0	0	0	0	0	0	1	0	1
03:15 PM	0	0	0	0	2	0	0	0	0	0	1	0	3
03:30 PM	0	0	0	0	1	0	0	0	0	0	0	0	1
Total	0	0	0	0	3	0	0	0	0	0	2	0	5
04:00 PM	0	0	0	0	0	0	0	0	0	0	4	0	4
04:15 PM	0	0	0	0	0	0	0	0	0	0	2	0	2
04:45 PM	0	0	0	0	0	0	0	0	0	0	1	0	1
Total	0	0	0	0	0	0	0	0	0	0	7	0	7
05:00 PM	0	0	0	0	0	0	0	0	0	0	2	0	2
05:30 PM	0	0	0	0	1	0	0	0	0	0	2	0	3
Total	0	0	0	0	1	0	0	0	0	0	4	0	5
Grand Total	0	0	0	0	12	0	0	0	0	0	27	0	39
Apprch %	0	0	0	0	100	0	0	0	0	0	100	0	
Total %	0	0	0	0	30.8	0	0	0	0	0	69.2	0	

CITY TRAFFIC COUNTERS

626.991.7522

www.ctcounters.com

File Name : paxton_haddon_3axle
Site Code : 00000000
Start Date : 3/26/2015
Page No : 2

	Haddon St Southbound				Paxton St Westbound				Haddon St Northbound				Paxton St Eastbound				
Start Time	Left	Thru	Right	App. Total	Left	Thru	Right	App. Total	Left	Thru	Right	App. Total	Left	Thru	Right	App. Total	Int. Total
Peak Hour Analysis From 07:00 AM to 09:45 AM - Peak 1 of 1																	
Peak Hour for Entire Intersection Begins at 09:00 AM																	
09:00 AM	0	0	0	0	0	0	0	0	0	0	0	0	0	1	0	1	1
09:15 AM	0	0	0	0	0	0	0	0	0	0	0	0	0	0	0	0	0
09:30 AM	0	0	0	0	0	**1**	0	**1**	0	0	0	0	0	1	0	1	2
09:45 AM	0	0	0	0	0	1	0	1	0	0	0	0	0	**2**	0	**2**	**3**
Total Volume	0	0	0	0	0	2	0	2	0	0	0	0	0	4	0	4	6
% App. Total	0	0	0		0	100	0		0	0	0		0	100	0		
PHF	.000	.000	.000	.000	.000	.500	.000	.500	.000	.000	.000	.000	.000	.500	.000	.500	.500

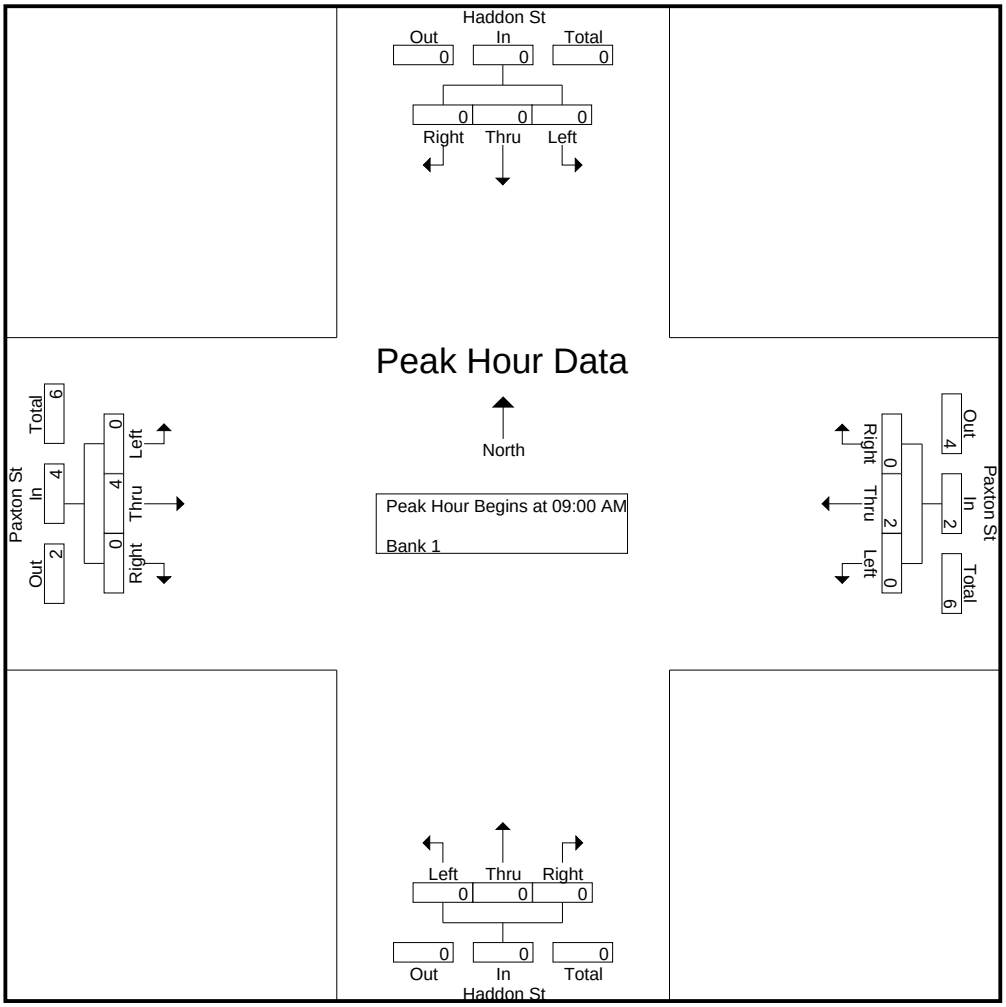

CITY TRAFFIC COUNTERS

626.991.7522

www.ctcounters.com

File Name : paxton_haddon_3axle
Site Code : 00000000
Start Date : 3/26/2015
Page No : 3

	Haddon St Southbound				Paxton St Westbound				Haddon St Northbound				Paxton St Eastbound				
Start Time	Left	Thru	Right	App. Total	Left	Thru	Right	App. Total	Left	Thru	Right	App. Total	Left	Thru	Right	App. Total	Int. Total
Peak Hour Analysis From 10:00 AM to 01:45 PM - Peak 1 of 1																	
Peak Hour for Entire Intersection Begins at 12:00 PM																	
12:00 PM	0	0	0	0	0	**1**	0	**1**	0	0	0	0	0	**2**	0	**2**	**3**
12:15 PM	0	0	0	0	0	0	0	0	0	0	0	0	0	0	0	0	0
12:30 PM	0	0	0	0	0	0	0	0	0	0	0	0	0	0	0	0	0
12:45 PM	0	0	0	0	0	1	0	1	0	0	0	0	0	0	0	0	1
Total Volume	0	0	0	0	0	2	0	2	0	0	0	0	0	2	0	2	4
% App. Total	0	0	0		0	100	0		0	0	0		0	100	0		
PHF	.000	.000	.000	.000	.000	.500	.000	.500	.000	.000	.000	.000	.000	.250	.000	.250	.333

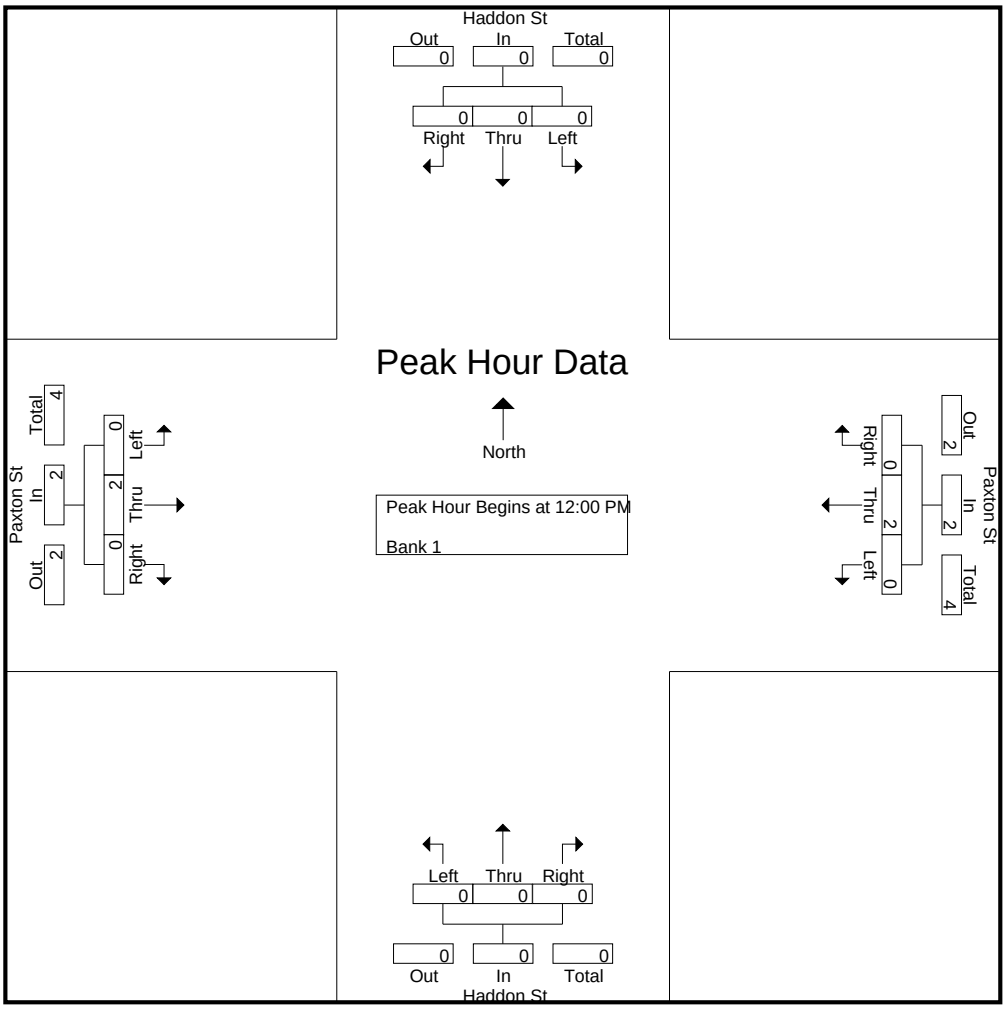

CITY TRAFFIC COUNTERS

626.991.7522

www.ctcounters.com

File Name : paxton_haddon_3axle
Site Code : 00000000
Start Date : 3/26/2015
Page No : 4

	Haddon St Southbound				Paxton St Westbound				Haddon St Northbound				Paxton St Eastbound				
Start Time	Left	Thru	Right	App. Total	Left	Thru	Right	App. Total	Left	Thru	Right	App. Total	Left	Thru	Right	App. Total	Int. Total
Peak Hour Analysis From 02:00 PM to 05:45 PM - Peak 1 of 1																	
Peak Hour for Entire Intersection Begins at 03:15 PM																	
03:15 PM	0	0	0	0	0	**2**	0	**2**	0	0	0	0	0	1	0	1	3
03:30 PM	0	0	0	0	0	1	0	1	0	0	0	0	0	0	0	0	1
03:45 PM	0	0	0	0	0	0	0	0	0	0	0	0	0	0	0	0	0
04:00 PM	0	0	0	0	0	0	0	0	0	0	0	0	0	**4**	0	**4**	**4**
Total Volume	0	0	0	0	0	3	0	3	0	0	0	0	0	5	0	5	8
% App. Total	0	0	0		0	100	0		0	0	0		0	100	0		
PHF	.000	.000	.000	.000	.000	.375	.000	.375	.000	.000	.000	.000	.000	.313	.000	.313	.500

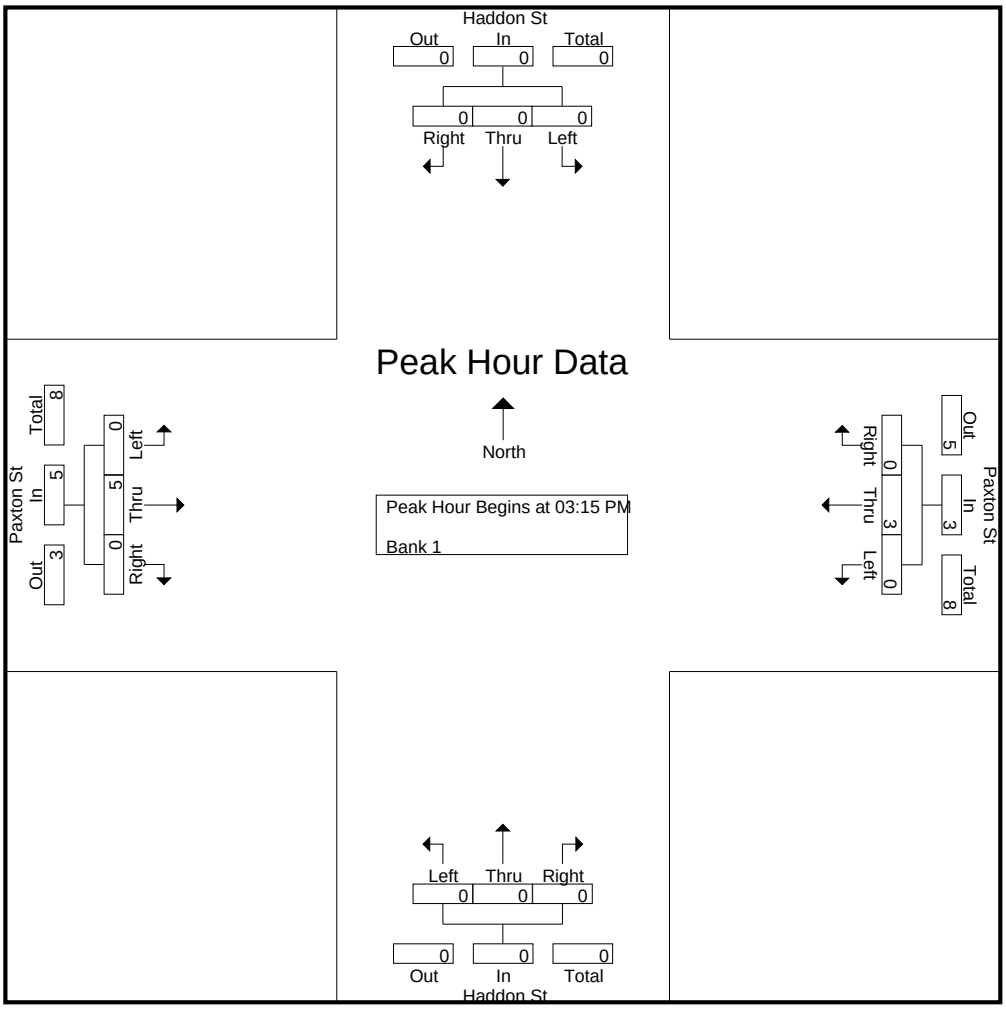

CITY TRAFFIC COUNTERS

626.991.7522

www.ctcounters.com

File Name : paxton_haddon_4axle
Site Code : 00000000
Start Date : 3/26/2015
Page No : 1

Groups Printed- Bank 2

	Haddon St Southbound			Paxton St Westbound			Haddon St Northbound			Paxton St Eastbound			
Start Time	Left	Thru	Right	Left	Thru	Right	Left	Thru	Right	Left	Thru	Right	Int. Total
07:15 AM	0	0	0	0	1	0	0	0	0	0	0	0	1
07:45 AM	0	0	0	0	0	0	0	0	0	0	1	0	1
Total	0	0	0	0	1	0	0	0	0	0	1	0	2
12:15 PM	0	0	0	0	0	0	0	0	0	0	1	0	1
Total	0	0	0	0	0	0	0	0	0	0	1	0	1
04:00 PM	0	0	0	0	1	0	0	0	0	0	0	0	1
Total	0	0	0	0	1	0	0	0	0	0	0	0	1
Grand Total	0	0	0	0	2	0	0	0	0	0	2	0	4
Apprch %	0	0	0	0	100	0	0	0	0	0	100	0	
Total %	0	0	0	0	50	0	0	0	0	0	50	0	

CITY TRAFFIC COUNTERS

626.991.7522

www.ctcounters.com

File Name : paxton_haddon_4axle
Site Code : 00000000
Start Date : 3/26/2015
Page No : 2

	Haddon St Southbound				Paxton St Westbound				Haddon St Northbound				Paxton St Eastbound				
Start Time	Left	Thru	Right	App. Total	Left	Thru	Right	App. Total	Left	Thru	Right	App. Total	Left	Thru	Right	App. Total	Int. Total
Peak Hour Analysis From 07:00 AM to 09:45 AM - Peak 1 of 1																	
Peak Hour for Entire Intersection Begins at 07:00 AM																	
07:00 AM	0	0	0	0	0	0	0	0	0	0	0	0	0	0	0	0	0
07:15 AM	0	0	0	0	0	**1**	0	**1**	0	0	0	0	0	0	0	0	**1**
07:30 AM	0	0	0	0	0	0	0	0	0	0	0	0	0	0	0	0	0
07:45 AM	0	0	0	0	0	0	0	0	0	0	0	0	0	**1**	0	**1**	1
Total Volume	0	0	0	0	0	1	0	1	0	0	0	0	0	1	0	1	2
% App. Total	0	0	0		0	100	0		0	0	0		0	100	0		
PHF	.000	.000	.000	.000	.000	.250	.000	.250	.000	.000	.000	.000	.000	.250	.000	.250	.500

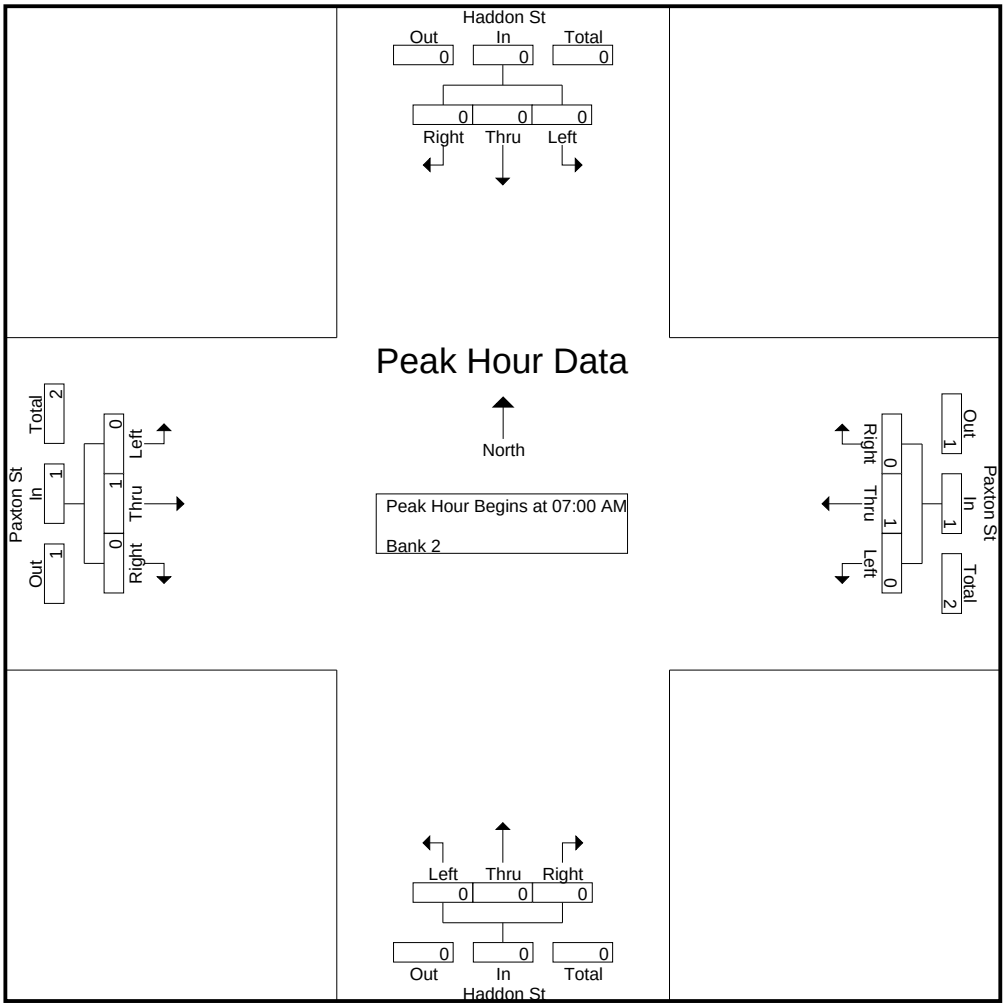

CITY TRAFFIC COUNTERS

626.991.7522

www.ctcounters.com

File Name : paxton_haddon_4axle
Site Code : 00000000
Start Date : 3/26/2015
Page No : 3

	Haddon St Southbound				Paxton St Westbound				Haddon St Northbound				Paxton St Eastbound				
Start Time	Left	Thru	Right	App. Total	Left	Thru	Right	App. Total	Left	Thru	Right	App. Total	Left	Thru	Right	App. Total	Int. Total
Peak Hour Analysis From 10:00 AM to 01:45 PM - Peak 1 of 1																	
Peak Hour for Entire Intersection Begins at 11:30 AM																	
11:30 AM	0	0	0	0	0	0	0	0	0	0	0	0	0	0	0	0	0
11:45 AM	0	0	0	0	0	0	0	0	0	0	0	0	0	0	0	0	0
12:00 PM	0	0	0	0	0	0	0	0	0	0	0	0	0	0	0	0	0
12:15 PM	0	0	0	0	0	0	0	0	0	0	0	0	0	**1**	0	**1**	**1**
Total Volume	0	0	0	0	0	0	0	0	0	0	0	0	0	1	0	1	1
% App. Total	0	0	0		0	0	0		0	0	0		0	100	0		
PHF	.000	.000	.000	.000	.000	.000	.000	.000	.000	.000	.000	.000	.000	.250	.000	.250	.250

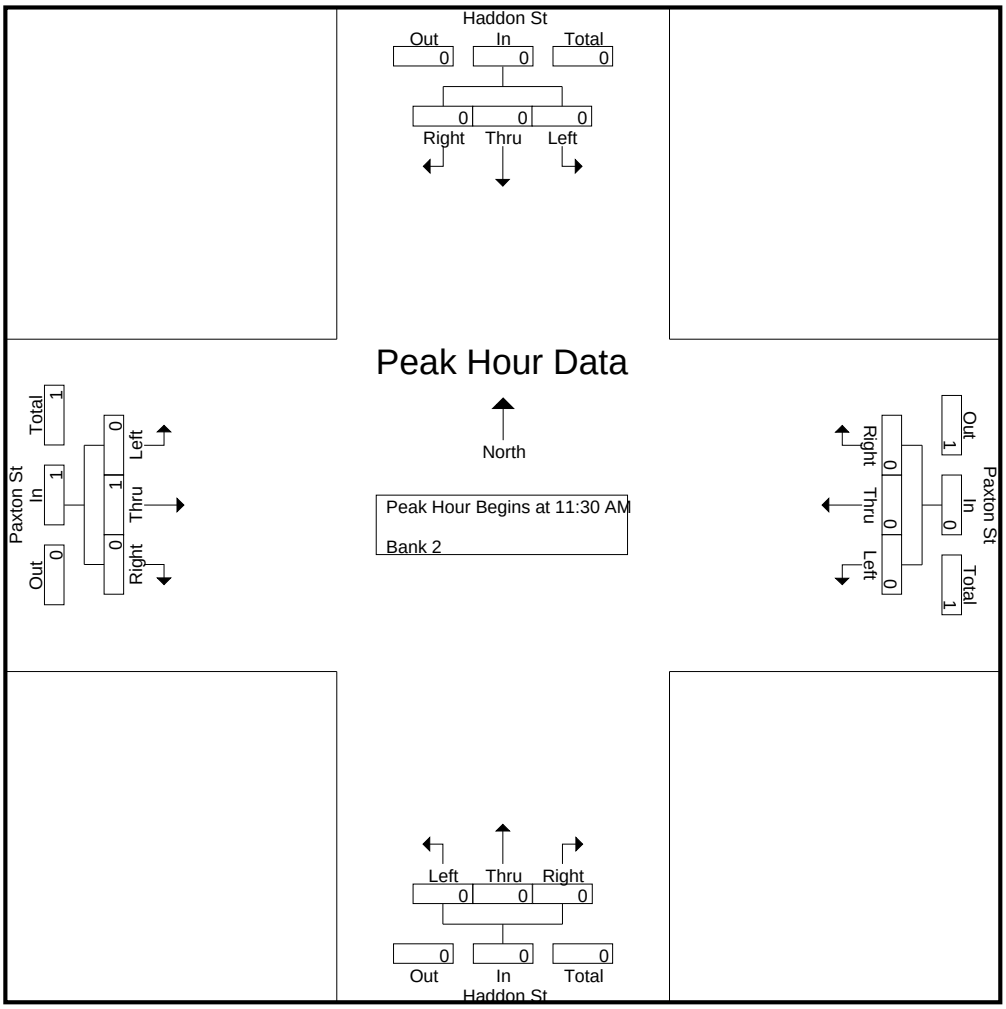

CITY TRAFFIC COUNTERS

626.991.7522

www.ctcounters.com

File Name : paxton_haddon_4axle
Site Code : 00000000
Start Date : 3/26/2015
Page No : 4

	Haddon St Southbound				Paxton St Westbound				Haddon St Northbound				Paxton St Eastbound				
Start Time	Left	Thru	Right	App. Total	Left	Thru	Right	App. Total	Left	Thru	Right	App. Total	Left	Thru	Right	App. Total	Int. Total
Peak Hour Analysis From 02:00 PM to 05:45 PM - Peak 1 of 1																	
Peak Hour for Entire Intersection Begins at 03:15 PM																	
03:15 PM	0	0	0	0	0	0	0	0	0	0	0	0	0	0	0	0	0
03:30 PM	0	0	0	0	0	0	0	0	0	0	0	0	0	0	0	0	0
03:45 PM	0	0	0	0	0	0	0	0	0	0	0	0	0	0	0	0	0
04:00 PM	0	0	0	0	0	**1**	0	**1**	0	0	0	0	0	0	0	0	**1**
Total Volume	0	0	0	0	0	1	0	1	0	0	0	0	0	0	0	0	1
% App. Total	0	0	0		0	100	0		0	0	0		0	0	0		
PHF	.000	.000	.000	.000	.000	.250	.000	.250	.000	.000	.000	.000	.000	.000	.000	.000	.250

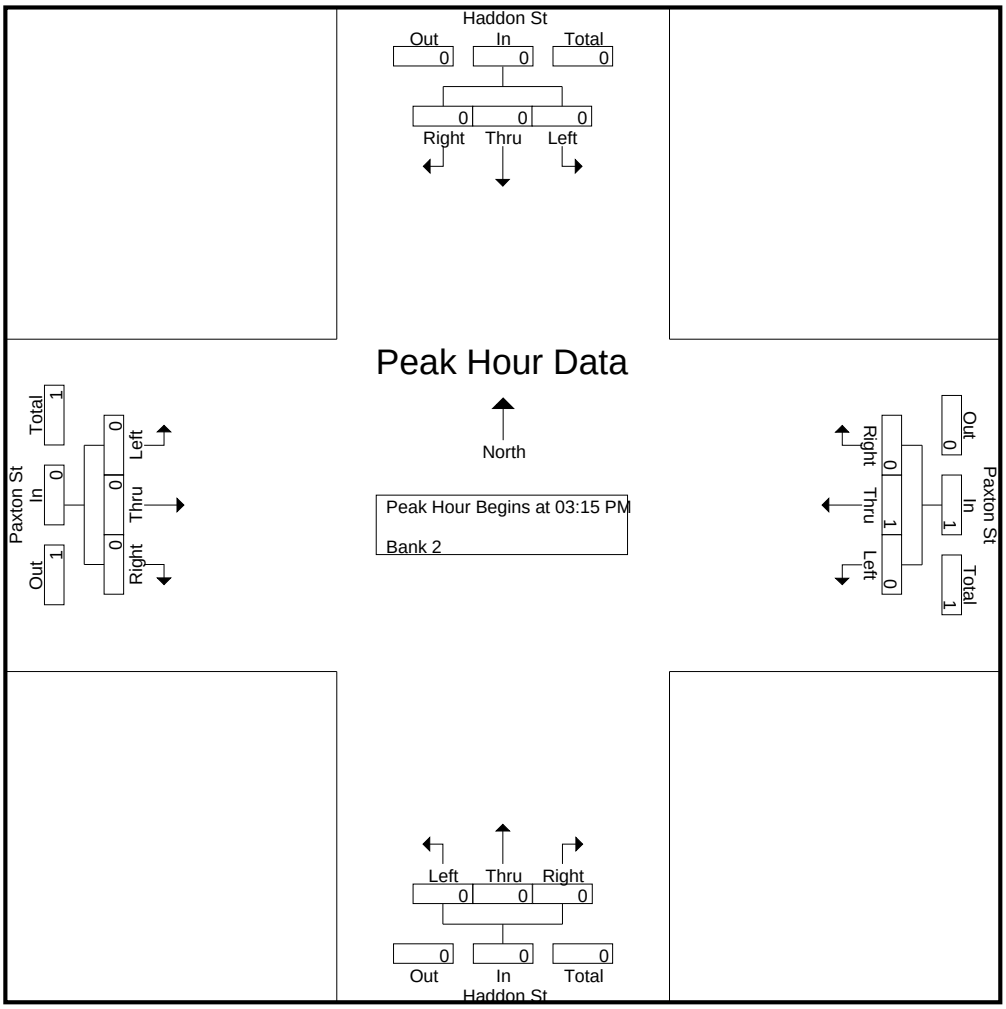

CITY TRAFFIC COUNTERS

626.991.7522

www.ctcounters.com

File Name : Paxton_Haddon_5axle
Site Code : 00000000
Start Date : 3/26/2015
Page No : 1

Groups Printed- Unshifted

	Haddon St Southbound			Paxton St Westbound			Haddon St Northbound			Paxton St Eastbound			
Start Time	Left	Thru	Right	Left	Thru	Right	Left	Thru	Right	Left	Thru	Right	Int. Total
12:45 PM	0	0	0	0	1	0	0	0	0	0	0	0	1
Total	0	0	0	0	1	0	0	0	0	0	0	0	1
03:00 PM	0	0	0	0	0	0	0	0	0	0	1	0	1
Total	0	0	0	0	0	0	0	0	0	0	1	0	1
04:00 PM	0	0	0	0	1	0	0	0	0	0	1	0	2
04:30 PM	0	0	0	0	0	0	0	0	0	0	1	0	1
Total	0	0	0	0	1	0	0	0	0	0	2	0	3
Grand Total	0	0	0	0	2	0	0	0	0	0	3	0	5
Apprch %	0	0	0	0	100	0	0	0	0	0	100	0	
Total %	0	0	0	0	40	0	0	0	0	0	60	0	

CITY TRAFFIC COUNTERS

626.991.7522

www.ctcounters.com

File Name : Paxton_Haddon_5axle
Site Code : 00000000
Start Date : 3/26/2015
Page No : 2

	Haddon St Southbound				Paxton St Westbound				Haddon St Northbound				Paxton St Eastbound				
Start Time	Left	Thru	Right	App. Total	Left	Thru	Right	App. Total	Left	Thru	Right	App. Total	Left	Thru	Right	App. Total	Int. Total
Peak Hour Analysis From 07:00 AM to 09:45 AM - Peak 1 of 1																	
Peak Hour for Entire Intersection Begins at 07:00 AM																	
07:00 AM	0	0	0	0	0	0	0	0	0	0	0	0	0	0	0	0	0
07:15 AM	0	0	0	0	0	0	0	0	0	0	0	0	0	0	0	0	0
07:30 AM	0	0	0	0	0	0	0	0	0	0	0	0	0	0	0	0	0
07:45 AM	0	0	0	0	0	0	0	0	0	0	0	0	0	0	0	0	0
Total Volume	0	0	0	0	0	0	0	0	0	0	0	0	0	0	0	0	0
% App. Total	0	0	0		0	0	0		0	0	0		0	0	0		
PHF	.000	.000	.000	.000	.000	.000	.000	.000	.000	.000	.000	.000	.000	.000	.000	.000	.000

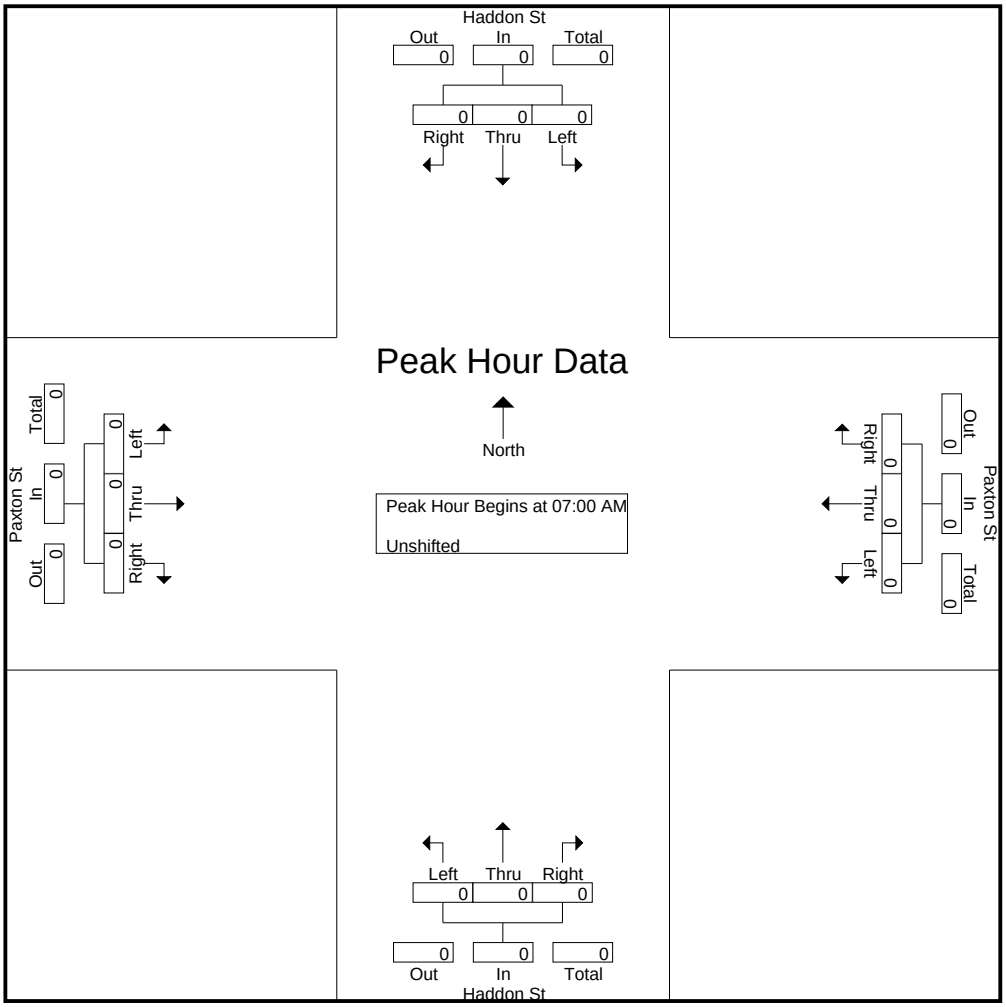

CITY TRAFFIC COUNTERS

626.991.7522

www.ctcounters.com

File Name : Paxton_Haddon_5axle
Site Code : 00000000
Start Date : 3/26/2015
Page No : 3

	Haddon St Southbound				Paxton St Westbound				Haddon St Northbound				Paxton St Eastbound				
Start Time	Left	Thru	Right	App. Total	Left	Thru	Right	App. Total	Left	Thru	Right	App. Total	Left	Thru	Right	App. Total	Int. Total
Peak Hour Analysis From 10:00 AM to 01:45 PM - Peak 1 of 1																	
Peak Hour for Entire Intersection Begins at 12:00 PM																	
12:00 PM	0	0	0	0	0	0	0	0	0	0	0	0	0	0	0	0	0
12:15 PM	0	0	0	0	0	0	0	0	0	0	0	0	0	0	0	0	0
12:30 PM	0	0	0	0	0	0	0	0	0	0	0	0	0	0	0	0	0
12:45 PM	0	0	0	0	0	**1**	0	**1**	0	0	0	0	0	0	0	0	**1**
Total Volume	0	0	0	0	0	1	0	1	0	0	0	0	0	0	0	0	1
% App. Total	0	0	0		0	100	0		0	0	0		0	0	0		
PHF	.000	.000	.000	.000	.000	.250	.000	.250	.000	.000	.000	.000	.000	.000	.000	.000	.250

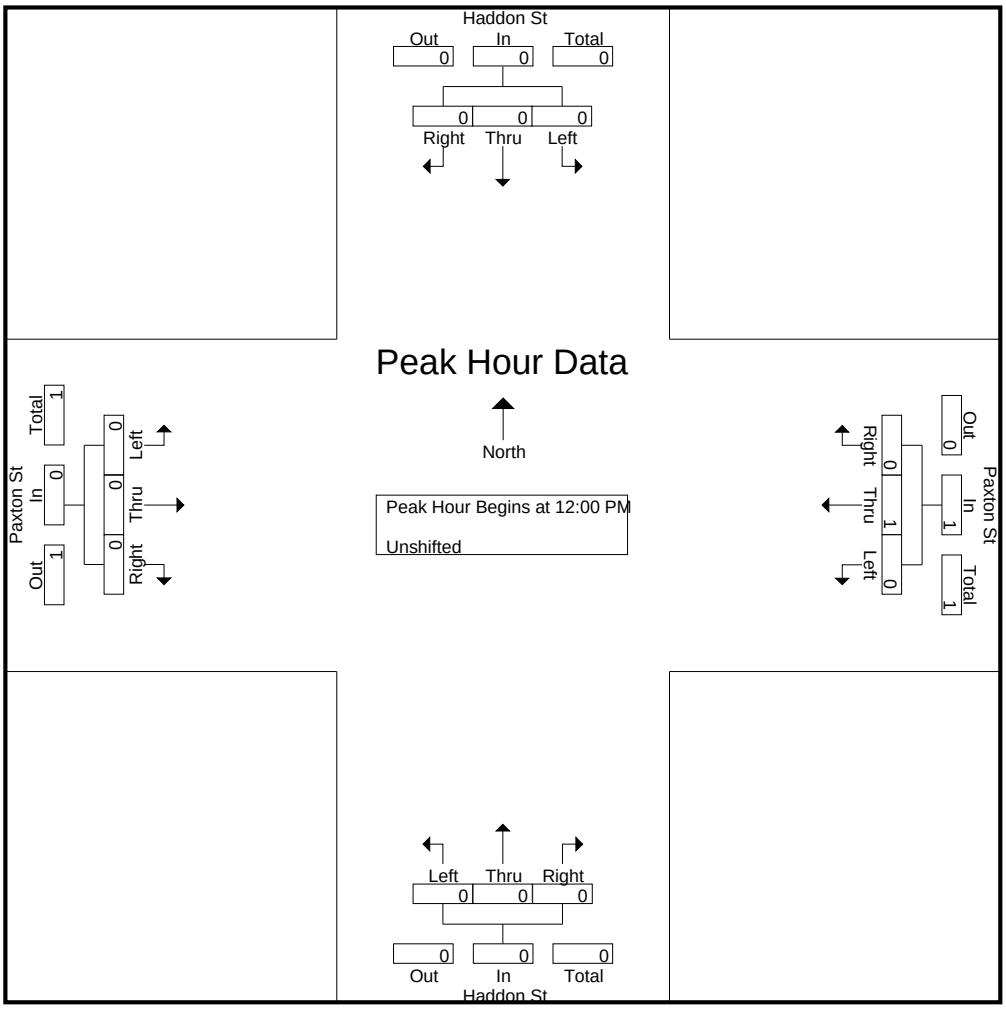

CITY TRAFFIC COUNTERS

626.991.7522

www.ctcounters.com

File Name : Paxton_Haddon_5axle
Site Code : 00000000
Start Date : 3/26/2015
Page No : 4

	Haddon St Southbound				Paxton St Westbound				Haddon St Northbound				Paxton St Eastbound				
Start Time	Left	Thru	Right	App. Total	Left	Thru	Right	App. Total	Left	Thru	Right	App. Total	Left	Thru	Right	App. Total	Int. Total
Peak Hour Analysis From 02:00 PM to 05:45 PM - Peak 1 of 1																	
Peak Hour for Entire Intersection Begins at 03:45 PM																	
03:45 PM	0	0	0	0	0	0	0	0	0	0	0	0	0	0	0	0	0
04:00 PM	0	0	0	0	0	**1**	0	**1**	0	0	0	0	0	**1**	0	**1**	**2**
04:15 PM	0	0	0	0	0	0	0	0	0	0	0	0	0	0	0	0	0
04:30 PM	0	0	0	0	0	0	0	0	0	0	0	0	0	1	0	1	1
Total Volume	0	0	0	0	0	1	0	1	0	0	0	0	0	2	0	2	3
% App. Total	0	0	0		0	100	0		0	0	0		0	100	0		
PHF	.000	.000	.000	.000	.000	.250	.000	.250	.000	.000	.000	.000	.000	.500	.000	.500	.375

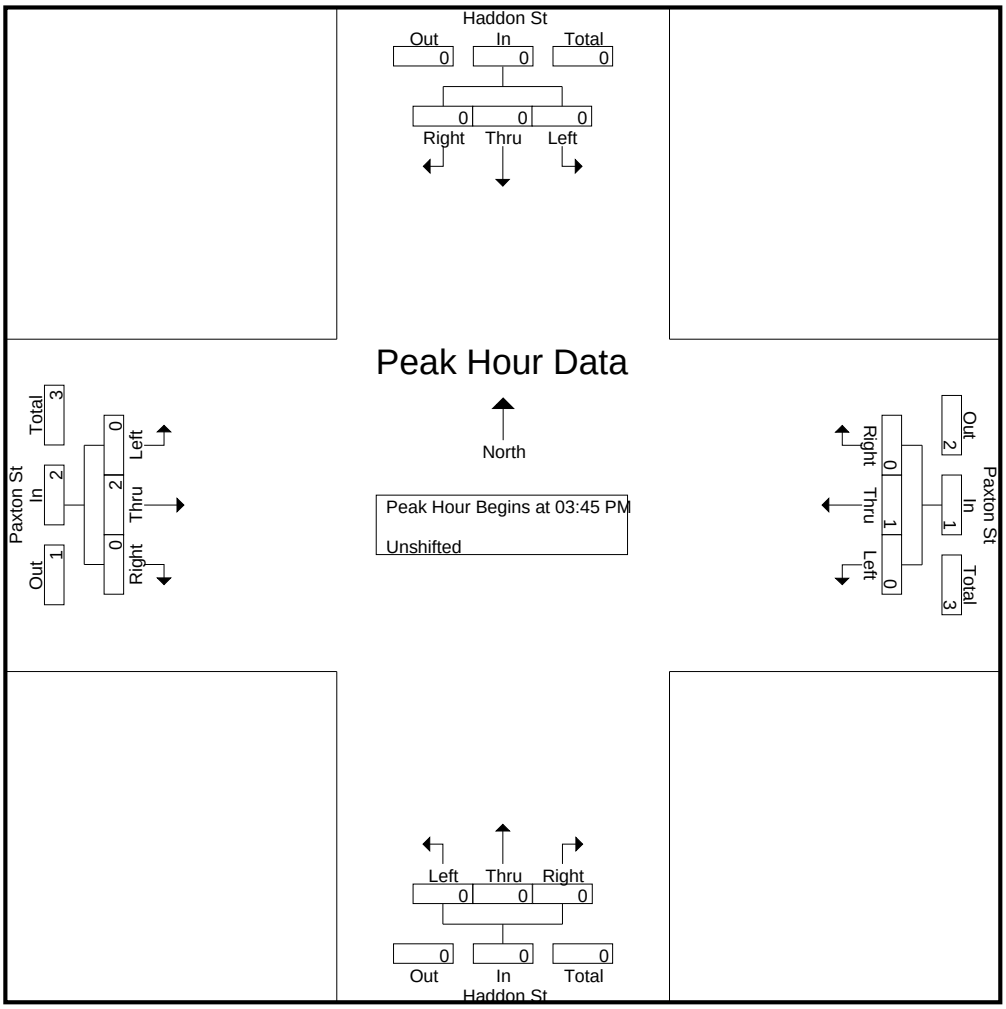

CITY TRAFFIC COUNTERS

626.991.7522

www.ctcounters.com

File Name : paxton_kewen
Site Code : 00000000
Start Date : 3/26/2015
Page No : 1

Groups Printed- Unshifted

	Kewen Ave Southbound			Paxton St Westbound			Kewen Ave Northbound			Paxton St Eastbound			
Start Time	Left	Thru	Right	Left	Thru	Right	Left	Thru	Right	Left	Thru	Right	Int. Total
07:00 AM	0	0	0	4	149	0	5	0	8	0	117	8	291
07:15 AM	0	0	0	4	160	0	11	0	7	0	184	7	373
07:30 AM	0	0	0	20	178	0	4	0	16	0	188	18	424
07:45 AM	0	0	0	19	198	0	17	0	33	0	209	22	498
Total	0	0	0	47	685	0	37	0	64	0	698	55	1586
08:00 AM	0	0	0	7	202	0	4	0	26	0	156	7	402
08:15 AM	0	0	0	4	125	0	5	0	8	0	150	5	297
08:30 AM	0	0	0	6	133	0	5	0	7	0	122	2	275
08:45 AM	0	0	0	3	101	0	6	0	9	0	116	5	240
Total	0	0	0	20	561	0	20	0	50	0	544	19	1214
09:00 AM	0	0	0	6	93	0	2	0	7	0	83	3	194
09:15 AM	0	0	0	3	96	0	3	0	2	0	89	4	197
09:30 AM	0	0	0	5	72	0	3	0	10	0	105	3	198
09:45 AM	0	0	0	3	91	0	2	0	7	0	116	2	221
Total	0	0	0	17	352	0	10	0	26	0	393	12	810
12:00 PM	0	0	0	4	118	0	0	0	11	0	120	0	253
12:15 PM	0	0	0	6	114	0	2	0	8	0	110	4	244
12:30 PM	0	0	0	9	123	0	3	0	6	0	104	5	250
12:45 PM	0	0	0	5	96	0	4	0	10	0	128	5	248
Total	0	0	0	24	451	0	9	0	35	0	462	14	995
01:00 PM	0	0	0	8	112	0	1	0	8	0	115	4	248
01:15 PM	0	0	0	4	123	0	1	0	2	0	118	5	253
01:30 PM	0	0	0	8	130	0	2	0	6	0	121	4	271
01:45 PM	0	0	0	8	114	0	0	0	5	0	110	8	245
Total	0	0	0	28	479	0	4	0	21	0	464	21	1017
03:00 PM	0	0	0	10	136	0	3	0	3	0	158	2	312
03:15 PM	0	0	0	8	159	0	4	0	7	0	179	6	363
03:30 PM	0	0	0	10	157	0	1	0	8	0	177	8	361
03:45 PM	0	0	0	5	182	0	4	0	10	0	165	7	373
Total	0	0	0	33	634	0	12	0	28	0	679	23	1409
04:00 PM	0	0	0	9	165	0	1	0	9	0	176	6	366
04:15 PM	0	0	0	9	158	0	6	0	8	0	183	5	369
04:30 PM	0	0	0	10	185	0	1	0	14	0	173	9	392
04:45 PM	0	0	0	7	189	0	2	0	8	0	200	7	413
Total	0	0	0	35	697	0	10	0	39	0	732	27	1540
05:00 PM	0	0	0	8	169	0	2	0	13	0	217	12	421
05:15 PM	0	0	0	4	159	0	5	0	15	0	226	6	415
05:30 PM	0	0	0	4	167	0	6	0	8	0	252	10	447
05:45 PM	0	0	0	8	196	0	5	0	16	0	232	7	464
Total	0	0	0	24	691	0	18	0	52	0	927	35	1747
Grand Total	0	0	0	228	4550	0	120	0	315	0	4899	206	10318
Apprch %	0	0	0	4.8	95.2	0	27.6	0	72.4	0	96	4	
Total %	0	0	0	2.2	44.1	0	1.2	0	3.1	0	47.5	2	

CITY TRAFFIC COUNTERS

626.991.7522

www.ctcounters.com

File Name : paxton_kewen
Site Code : 00000000
Start Date : 3/26/2015
Page No : 2

	Kewen Ave Southbound				Paxton St Westbound				Kewen Ave Northbound				Paxton St Eastbound				
Start Time	Left	Thru	Right	App. Total	Left	Thru	Right	App. Total	Left	Thru	Right	App. Total	Left	Thru	Right	App. Total	Int. Total
Peak Hour Analysis From 07:00 AM to 09:45 AM - Peak 1 of 1																	
Peak Hour for Entire Intersection Begins at 07:15 AM																	
07:15 AM	0	0	0	0	4	160	0	164	11	0	7	18	0	184	7	191	373
07:30 AM	0	0	0	0	**20**	178	0	198	4	0	16	20	0	188	18	206	424
07:45 AM	0	0	0	0	19	198	0	**217**	**17**	0	**33**	**50**	0	**209**	**22**	**231**	**498**
08:00 AM	0	0	0	0	7	**202**	0	209	4	0	26	30	0	156	7	163	402
Total Volume	0	0	0	0	50	738	0	788	36	0	82	118	0	737	54	791	1697
% App. Total	0	0	0		6.3	93.7	0		30.5	0	69.5		0	93.2	6.8		
PHF	.000	.000	.000	.000	.625	.913	.000	.908	.529	.000	.621	.590	.000	.882	.614	.856	.852

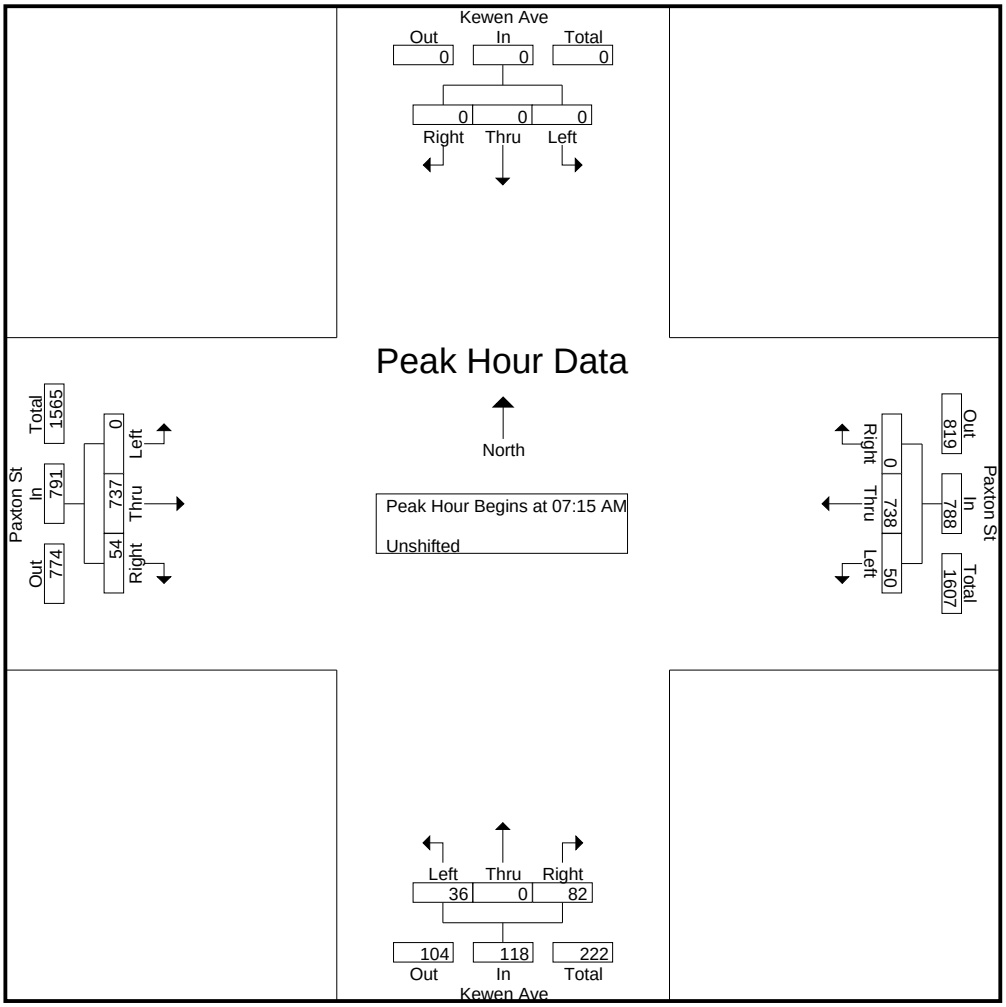

CITY TRAFFIC COUNTERS

626.991.7522

www.ctcounters.com

File Name : paxton_kewen
Site Code : 00000000
Start Date : 3/26/2015
Page No : 3

	Kewen Ave Southbound				Paxton St Westbound				Kewen Ave Northbound				Paxton St Eastbound				
Start Time	Left	Thru	Right	App. Total	Left	Thru	Right	App. Total	Left	Thru	Right	App. Total	Left	Thru	Right	App. Total	Int. Total
Peak Hour Analysis From 10:00 AM to 01:45 PM - Peak 1 of 1																	
Peak Hour for Entire Intersection Begins at 12:45 PM																	
12:45 PM	0	0	0	0	5	96	0	101	**4**	0	**10**	**14**	0	**128**	**5**	**133**	248
01:00 PM	0	0	0	0	**8**	112	0	120	1	0	8	9	0	115	4	119	248
01:15 PM	0	0	0	0	4	123	0	127	1	0	2	3	0	118	5	123	253
01:30 PM	0	0	0	0	8	**130**	0	**138**	2	0	6	8	0	121	4	125	**271**
Total Volume	0	0	0	0	25	461	0	486	8	0	26	34	0	482	18	500	1020
% App. Total	0	0	0		5.1	94.9	0		23.5	0	76.5		0	96.4	3.6		
PHF	.000	.000	.000	.000	.781	.887	.000	.880	.500	.000	.650	.607	.000	.941	.900	.940	.941

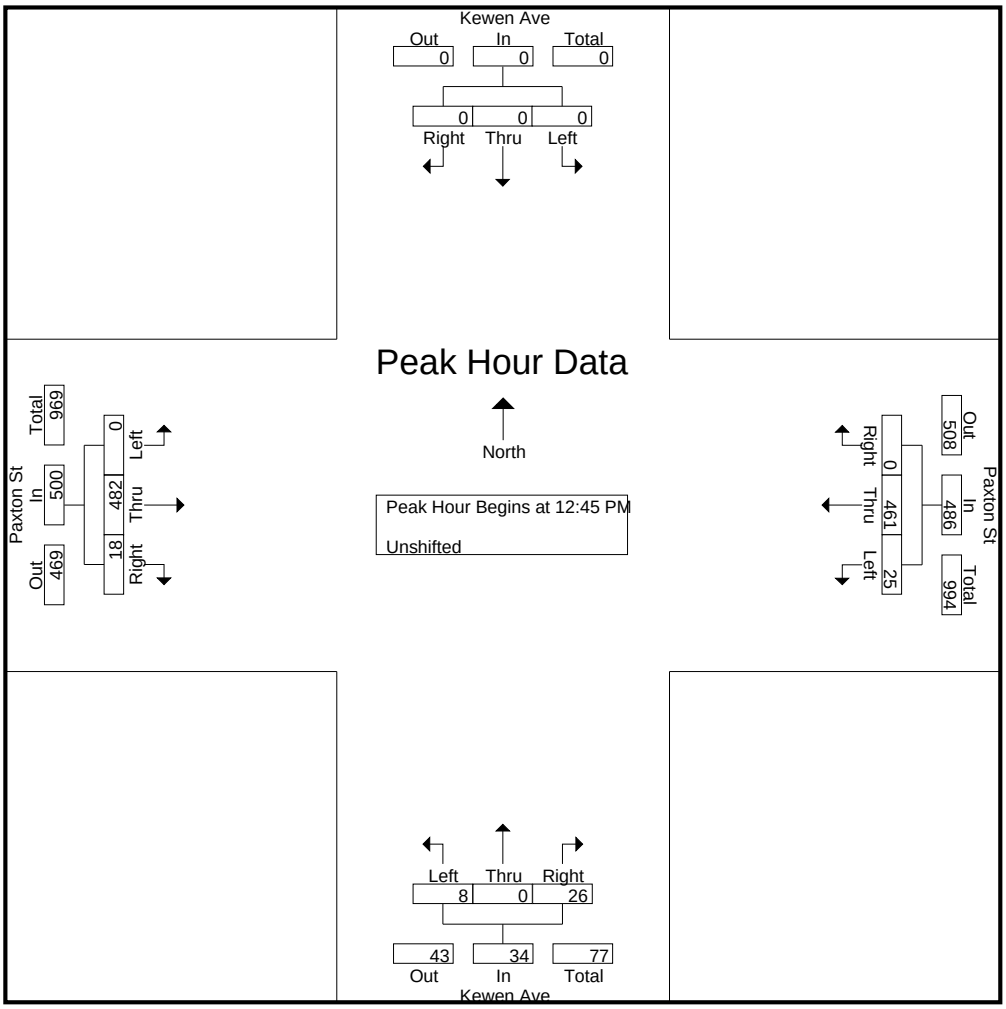

CITY TRAFFIC COUNTERS

626.991.7522

www.ctcounters.com

File Name : paxton_kewen
Site Code : 00000000
Start Date : 3/26/2015
Page No : 4

	Kewen Ave Southbound				Paxton St Westbound				Kewen Ave Northbound				Paxton St Eastbound				
Start Time	Left	Thru	Right	App. Total	Left	Thru	Right	App. Total	Left	Thru	Right	App. Total	Left	Thru	Right	App. Total	Int. Total
Peak Hour Analysis From 02:00 PM to 05:45 PM - Peak 1 of 1																	
Peak Hour for Entire Intersection Begins at 05:00 PM																	
05:00 PM	0	0	0	0	**8**	169	0	177	2	0	13	15	0	217	**12**	229	421
05:15 PM	0	0	0	0	4	159	0	163	5	0	15	20	0	226	6	232	415
05:30 PM	0	0	0	0	4	167	0	171	**6**	0	8	14	0	**252**	10	**262**	447
05:45 PM	0	0	0	0	8	**196**	0	**204**	5	0	**16**	**21**	0	232	7	239	**464**
Total Volume	0	0	0	0	24	691	0	715	18	0	52	70	0	927	35	962	1747
% App. Total	0	0	0		3.4	96.6	0		25.7	0	74.3		0	96.4	3.6		
PHF	.000	.000	.000	.000	.750	.881	.000	.876	.750	.000	.813	.833	.000	.920	.729	.918	.941

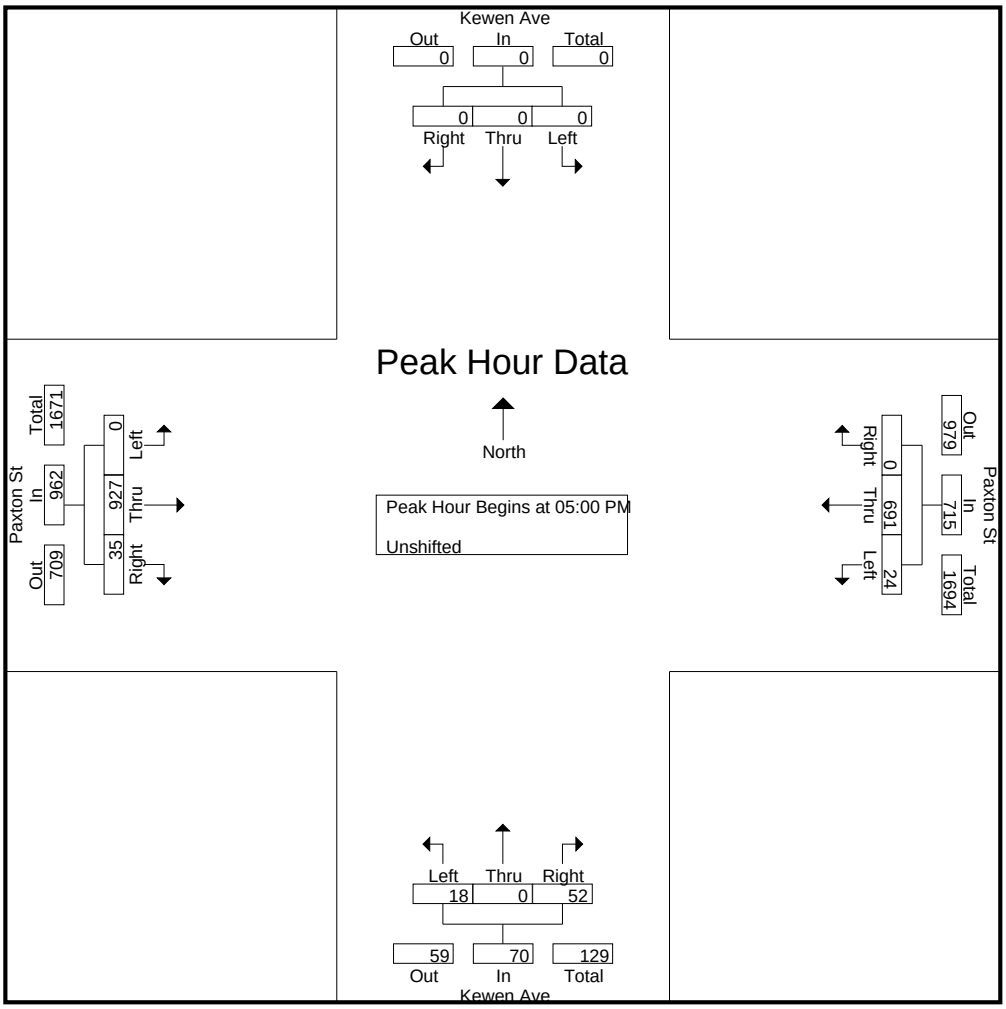

CITY TRAFFIC COUNTERS

626.991.7522

www.ctcounters.com

File Name : Paxton_Kewen_Motorcycles
Site Code : 00000000
Start Date : 3/26/2015
Page No : 1

Groups Printed- Bank 2

	Kewen Ave Southbound			Paxton St Westbound			Kewen Ave Northbound			Paxton St Eastbound			
Start Time	Left	Thru	Right	Left	Thru	Right	Left	Thru	Right	Left	Thru	Right	Int. Total
07:00 AM	0	0	0	0	0	0	0	0	0	0	1	0	1
07:15 AM	0	0	0	0	1	0	0	0	0	0	0	0	1
07:30 AM	0	0	0	0	2	0	0	0	0	0	0	0	2
07:45 AM	0	0	0	0	0	0	0	0	0	0	1	0	1
Total	0	0	0	0	3	0	0	0	0	0	2	0	5
08:00 AM	0	0	0	0	0	0	0	0	0	0	1	0	1
08:30 AM	0	0	0	0	0	0	0	0	0	0	1	0	1
Total	0	0	0	0	0	0	0	0	0	0	2	0	2
09:45 AM	0	0	0	0	2	0	0	0	0	0	0	0	2
Total	0	0	0	0	2	0	0	0	0	0	0	0	2
12:30 PM	0	0	0	0	0	0	0	0	0	0	0	2	2
Total	0	0	0	0	0	0	0	0	0	0	0	2	2
01:00 PM	0	0	0	0	0	0	0	0	0	0	1	0	1
01:30 PM	0	0	0	0	1	0	0	0	0	0	0	0	1
01:45 PM	0	0	0	0	1	0	0	0	0	0	0	0	1
Total	0	0	0	0	2	0	0	0	0	0	1	0	3
03:15 PM	0	0	0	0	1	0	0	0	0	0	0	0	1
03:30 PM	0	0	0	0	1	0	0	0	0	0	1	0	2
03:45 PM	0	0	0	0	0	0	0	0	0	0	3	0	3
Total	0	0	0	0	2	0	0	0	0	0	4	0	6
04:30 PM	0	0	0	0	4	0	0	0	0	0	0	0	4
04:45 PM	0	0	0	0	2	0	0	0	0	0	0	0	2
Total	0	0	0	0	6	0	0	0	0	0	0	0	6
05:00 PM	0	0	0	0	1	0	0	0	0	0	0	0	1
05:15 PM	0	0	0	0	3	0	0	0	0	0	2	0	5
05:30 PM	0	0	0	0	1	0	0	0	0	0	1	0	2
Total	0	0	0	0	5	0	0	0	0	0	3	0	8
Grand Total	0	0	0	0	20	0	0	0	0	0	12	2	34
Apprch %	0	0	0	0	100	0	0	0	0	0	85.7	14.3	
Total %	0	0	0	0	58.8	0	0	0	0	0	35.3	5.9	

CITY TRAFFIC COUNTERS

626.991.7522

www.ctcounters.com

File Name : Paxton_Kewen_Motorcycles
Site Code : 00000000
Start Date : 3/26/2015
Page No : 2

	Kewen Ave Southbound				Paxton St Westbound				Kewen Ave Northbound				Paxton St Eastbound				
Start Time	Left	Thru	Right	App. Total	Left	Thru	Right	App. Total	Left	Thru	Right	App. Total	Left	Thru	Right	App. Total	Int. Total
Peak Hour Analysis From 07:00 AM to 09:45 AM - Peak 1 of 1																	
Peak Hour for Entire Intersection Begins at 07:00 AM																	
07:00 AM	0	0	0	0	0	0	0	0	0	0	0	0	0	**1**	0	**1**	1
07:15 AM	0	0	0	0	0	1	0	1	0	0	0	0	0	0	0	0	1
07:30 AM	0	0	0	0	0	**2**	0	**2**	0	0	0	0	0	0	0	0	**2**
07:45 AM	0	0	0	0	0	0	0	0	0	0	0	0	0	1	0	1	1
Total Volume	0	0	0	0	0	3	0	3	0	0	0	0	0	2	0	2	5
% App. Total	0	0	0		0	100	0		0	0	0		0	100	0		
PHF	.000	.000	.000	.000	.000	.375	.000	.375	.000	.000	.000	.000	.000	.500	.000	.500	.625

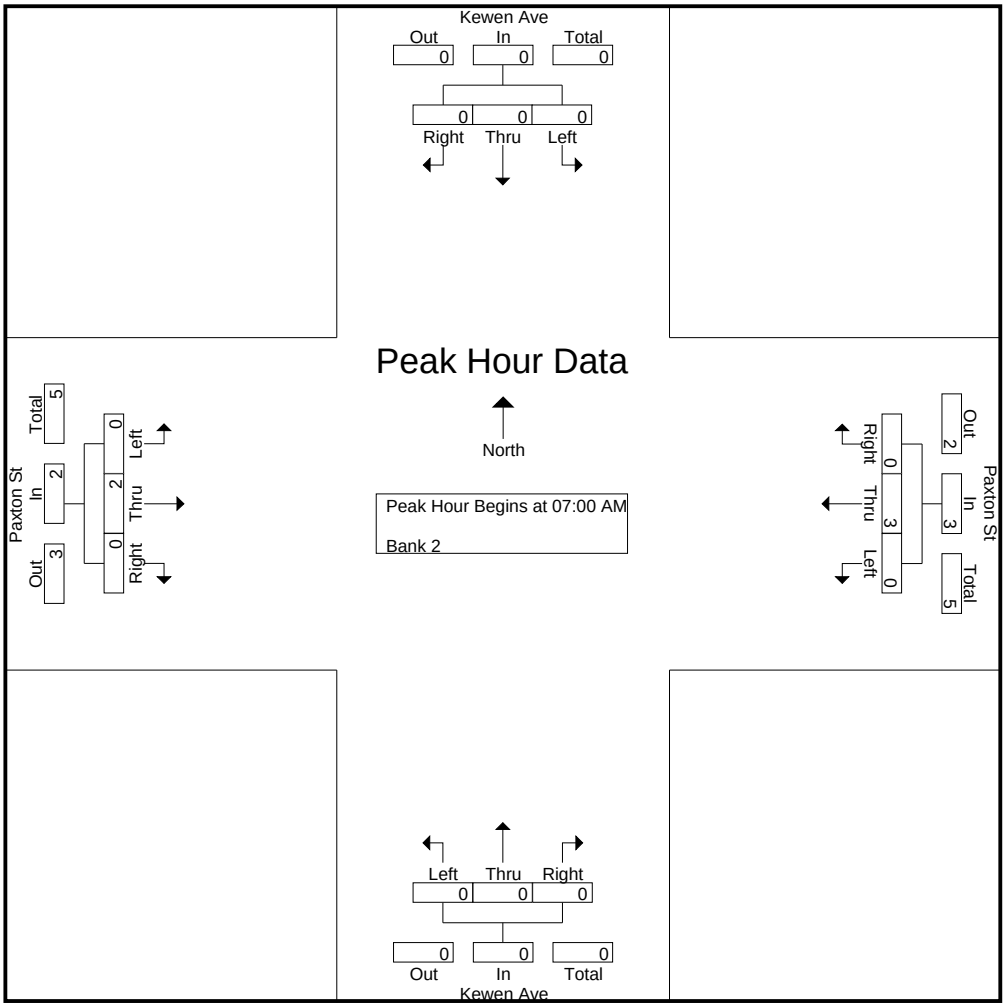

CITY TRAFFIC COUNTERS

626.991.7522

www.ctcounters.com

File Name : Paxton_Kewen_Motorcycles
Site Code : 00000000
Start Date : 3/26/2015
Page No : 3

	Kewen Ave Southbound				Paxton St Westbound				Kewen Ave Northbound				Paxton St Eastbound				
Start Time	Left	Thru	Right	App. Total	Left	Thru	Right	App. Total	Left	Thru	Right	App. Total	Left	Thru	Right	App. Total	Int. Total
Peak Hour Analysis From 10:00 AM to 01:45 PM - Peak 1 of 1																	
Peak Hour for Entire Intersection Begins at 12:15 PM																	
12:15 PM	0	0	0	0	0	0	0	0	0	0	0	0	0	0	0	0	0
12:30 PM	0	0	0	0	0	0	0	0	0	0	0	0	0	0	**2**	**2**	**2**
12:45 PM	0	0	0	0	0	0	0	0	0	0	0	0	0	0	0	0	0
01:00 PM	0	0	0	0	0	0	0	0	0	0	0	0	0	**1**	0	1	1
Total Volume	0	0	0	0	0	0	0	0	0	0	0	0	0	1	2	3	3
% App. Total	0	0	0		0	0	0		0	0	0		0	33.3	66.7		
PHF	.000	.000	.000	.000	.000	.000	.000	.000	.000	.000	.000	.000	.000	.250	.250	.375	.375

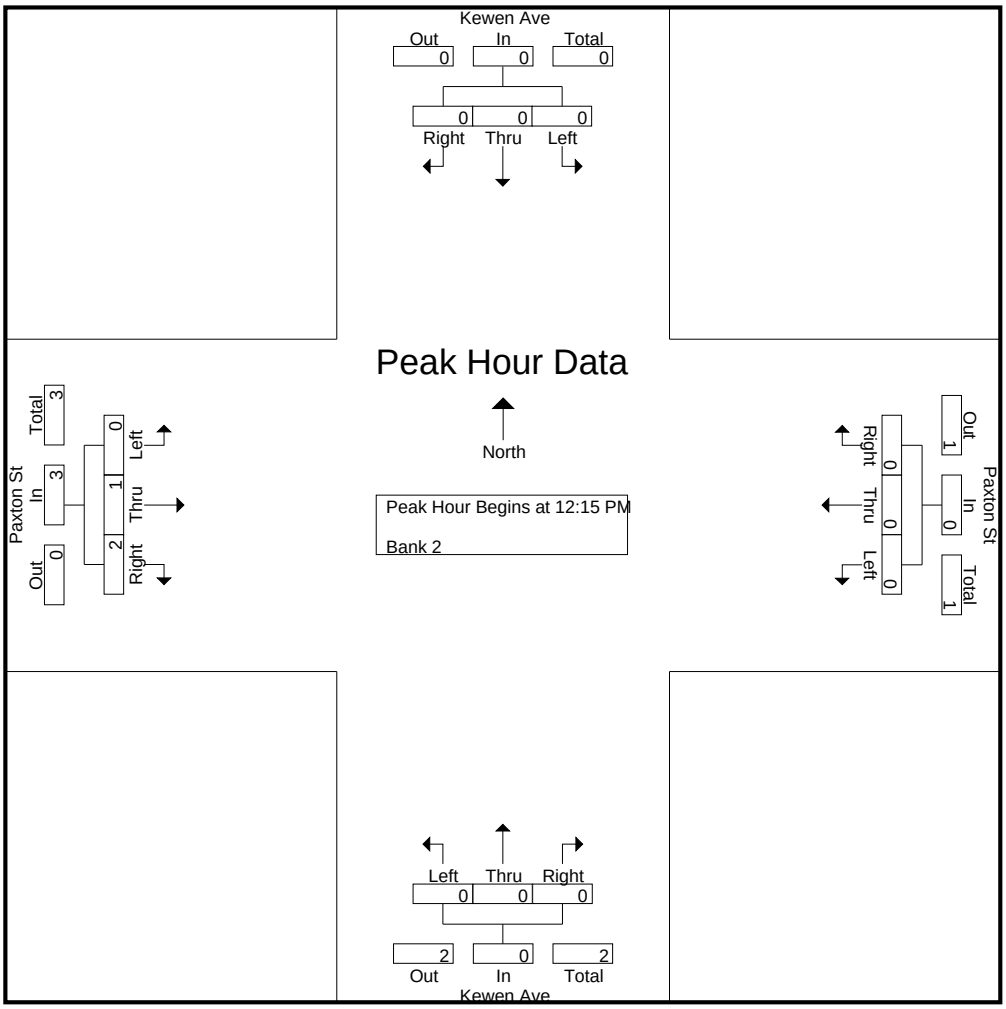

CITY TRAFFIC COUNTERS

626.991.7522

www.ctcounters.com

File Name : Paxton_Kewen_Motorcycles
Site Code : 00000000
Start Date : 3/26/2015
Page No : 4

	Kewen Ave Southbound				Paxton St Westbound				Kewen Ave Northbound				Paxton St Eastbound				
Start Time	Left	Thru	Right	App. Total	Left	Thru	Right	App. Total	Left	Thru	Right	App. Total	Left	Thru	Right	App. Total	Int. Total
Peak Hour Analysis From 02:00 PM to 05:45 PM - Peak 1 of 1																	
Peak Hour for Entire Intersection Begins at 04:30 PM																	
04:30 PM	0	0	0	0	0	**4**	0	**4**	0	0	0	0	0	0	0	0	4
04:45 PM	0	0	0	0	0	2	0	2	0	0	0	0	0	0	0	0	2
05:00 PM	0	0	0	0	0	1	0	1	0	0	0	0	0	0	0	0	1
05:15 PM	0	0	0	0	0	3	0	3	0	0	0	0	0	**2**	0	**2**	**5**
Total Volume	0	0	0	0	0	10	0	10	0	0	0	0	0	2	0	2	12
% App. Total	0	0	0		0	100	0		0	0	0		0	100	0		
PHF	.000	.000	.000	.000	.000	.625	.000	.625	.000	.000	.000	.000	.000	.250	.000	.250	.600

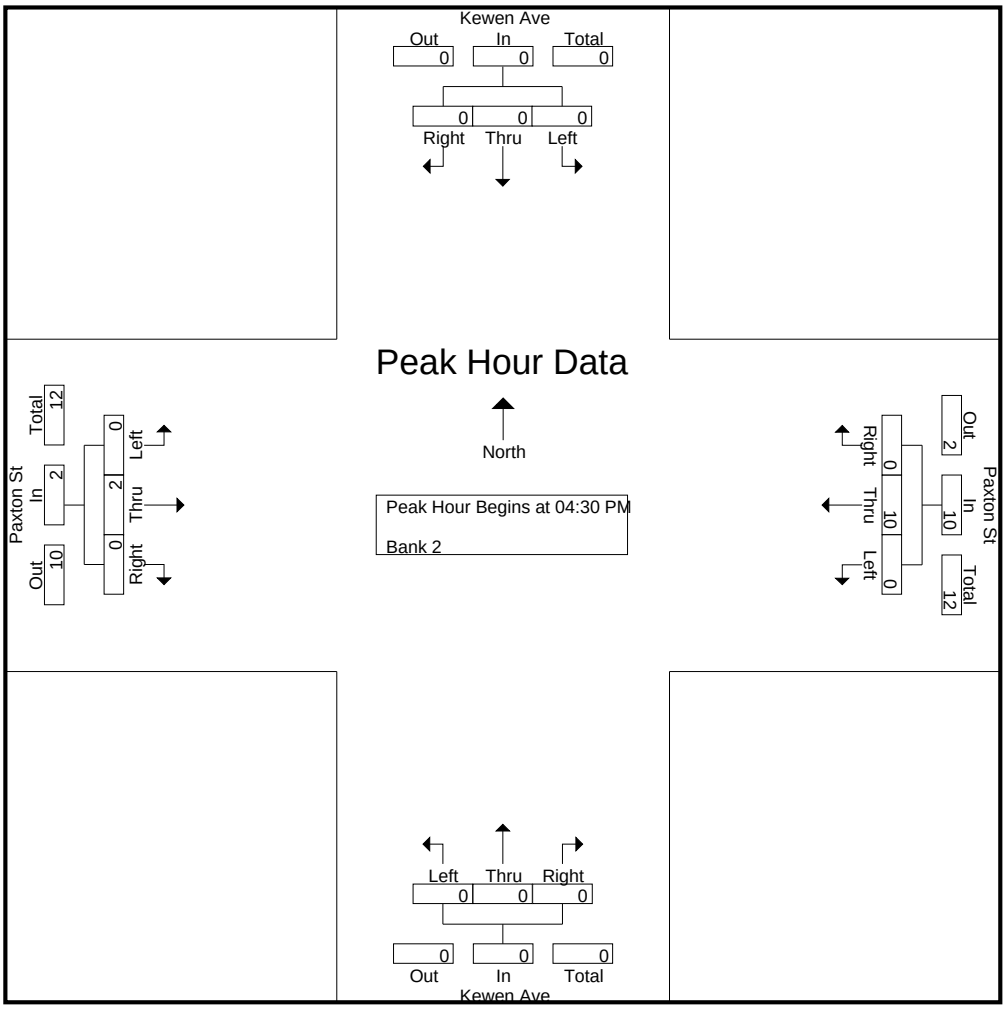

CITY TRAFFIC COUNTERS

626.991.7522

www.ctcounters.com

File Name : Paxton_Kewen_Buses
Site Code : 00000000
Start Date : 3/26/2015
Page No : 1

Groups Printed- Bank 1

	Kewen Ave Southbound			Paxton St Westbound			Kewen Ave Northbound			Paxton St Eastbound			
Start Time	Left	Thru	Right	Left	Thru	Right	Left	Thru	Right	Left	Thru	Right	Int. Total
07:00 AM	0	0	0	0	3	0	0	0	0	0	2	0	5
07:30 AM	0	0	0	0	1	0	0	0	0	0	0	0	1
07:45 AM	0	0	0	0	1	0	0	0	0	0	1	0	2
Total	0	0	0	0	5	0	0	0	0	0	3	0	8
08:00 AM	0	0	0	0	0	0	0	0	0	0	2	0	2
08:15 AM	0	0	0	0	0	0	0	0	0	0	5	0	5
08:30 AM	0	0	0	0	0	0	0	0	0	0	5	0	5
08:45 AM	0	0	0	0	1	0	0	0	0	0	1	0	2
Total	0	0	0	0	1	0	0	0	0	0	13	0	14
09:00 AM	0	0	0	0	0	0	0	0	0	0	5	0	5
09:15 AM	0	0	0	0	0	0	0	0	0	0	2	0	2
09:30 AM	0	0	0	0	0	0	0	0	0	0	3	0	3
09:45 AM	0	0	0	0	0	0	0	0	0	0	1	0	1
Total	0	0	0	0	0	0	0	0	0	0	11	0	11
12:00 PM	0	0	0	0	1	0	0	0	0	0	1	0	2
12:15 PM	0	0	0	0	0	0	0	0	0	0	1	0	1
12:30 PM	0	0	0	0	0	0	0	0	0	0	1	0	1
12:45 PM	0	0	0	0	2	0	0	0	0	0	0	0	2
Total	0	0	0	0	3	0	0	0	0	0	3	0	6
01:15 PM	0	0	0	0	3	0	0	0	0	0	0	0	3
01:30 PM	0	0	0	0	4	0	0	0	0	0	1	0	5
01:45 PM	0	0	0	0	2	0	0	0	0	0	0	0	2
Total	0	0	0	0	9	0	0	0	0	0	1	0	10
03:00 PM	0	0	0	0	1	0	0	0	0	0	1	0	2
03:15 PM	0	0	0	0	1	0	0	0	0	0	8	0	9
03:30 PM	0	0	0	0	1	0	0	0	0	0	3	0	4
03:45 PM	0	0	0	0	1	0	0	0	0	0	4	0	5
Total	0	0	0	0	4	0	0	0	0	0	16	0	20
04:00 PM	0	0	0	0	1	0	0	0	0	0	4	0	5
04:15 PM	0	0	0	0	0	0	0	0	0	0	4	0	4
04:30 PM	0	0	0	0	0	0	0	0	0	0	2	0	2
04:45 PM	0	0	0	0	1	0	0	0	0	0	3	0	4
Total	0	0	0	0	2	0	0	0	0	0	13	0	15
05:00 PM	0	0	0	0	0	0	0	0	0	0	4	0	4
05:15 PM	0	0	0	0	0	0	0	0	0	0	6	0	6
05:30 PM	0	0	0	0	0	0	0	0	0	0	4	0	4
05:45 PM	0	0	0	0	1	0	0	0	0	0	2	0	3
Total	0	0	0	0	1	0	0	0	0	0	16	0	17
Grand Total	0	0	0	0	25	0	0	0	0	0	76	0	101
Apprch %	0	0	0	0	100	0	0	0	0	0	100	0	
Total %	0	0	0	0	24.8	0	0	0	0	0	75.2	0	

CITY TRAFFIC COUNTERS

626.991.7522

www.ctcounters.com

File Name : Paxton_Kewen_Buses
Site Code : 00000000
Start Date : 3/26/2015
Page No : 2

	Kewen Ave Southbound				Paxton St Westbound				Kewen Ave Northbound				Paxton St Eastbound				
Start Time	Left	Thru	Right	App. Total	Left	Thru	Right	App. Total	Left	Thru	Right	App. Total	Left	Thru	Right	App. Total	Int. Total
Peak Hour Analysis From 07:00 AM to 09:45 AM - Peak 1 of 1																	
Peak Hour for Entire Intersection Begins at 08:15 AM																	
08:15 AM	0	0	0	0	0	0	0	0	0	0	0	0	0	**5**	0	**5**	**5**
08:30 AM	0	0	0	0	0	0	0	0	0	0	0	0	0	5	0	5	5
08:45 AM	0	0	0	0	0	**1**	0	**1**	0	0	0	0	0	1	0	1	2
09:00 AM	0	0	0	0	0	0	0	0	0	0	0	0	0	5	0	5	5
Total Volume	0	0	0	0	0	1	0	1	0	0	0	0	0	16	0	16	17
% App. Total	0	0	0		0	100	0		0	0	0		0	100	0		
PHF	.000	.000	.000	.000	.000	.250	.000	.250	.000	.000	.000	.000	.000	.800	.000	.800	.850

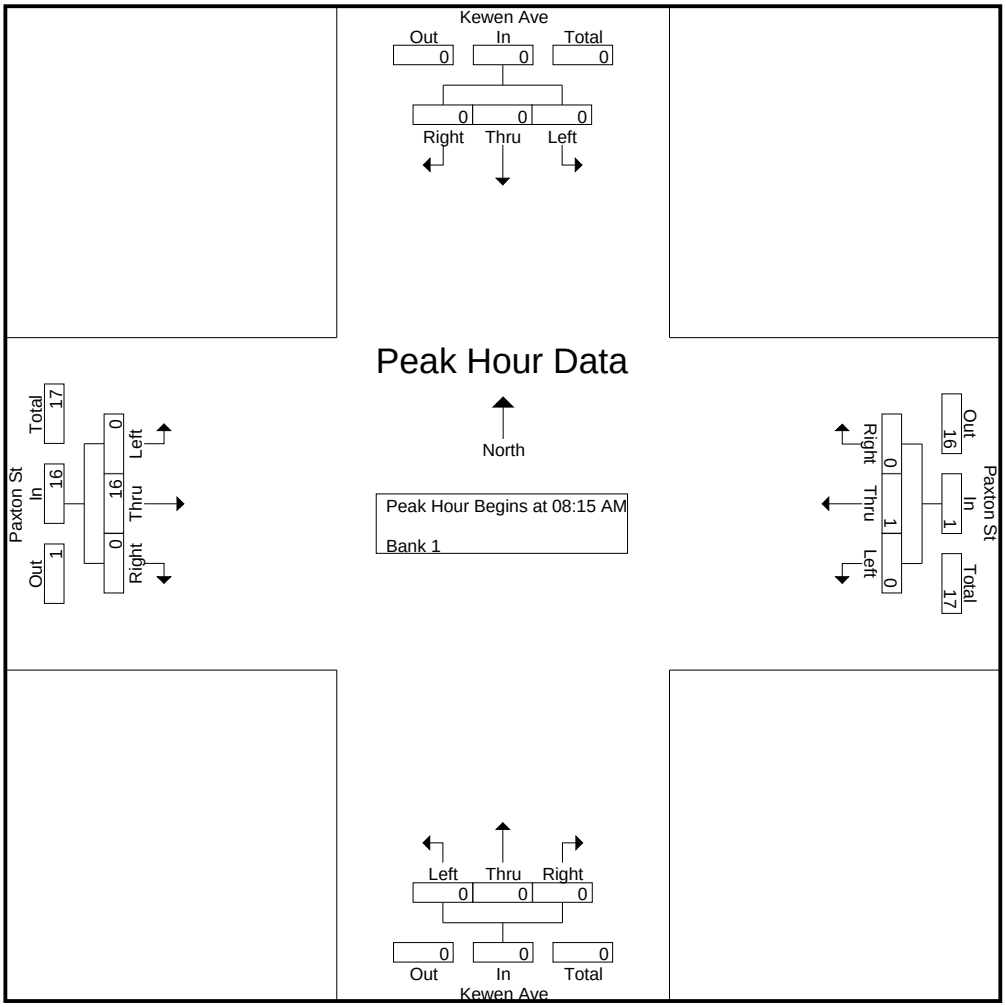

CITY TRAFFIC COUNTERS

626.991.7522

www.ctcounters.com

File Name : Paxton_Kewen_Buses
Site Code : 00000000
Start Date : 3/26/2015
Page No : 3

	Kewen Ave Southbound				Paxton St Westbound				Kewen Ave Northbound				Paxton St Eastbound				
Start Time	Left	Thru	Right	App. Total	Left	Thru	Right	App. Total	Left	Thru	Right	App. Total	Left	Thru	Right	App. Total	Int. Total
Peak Hour Analysis From 10:00 AM to 01:45 PM - Peak 1 of 1																	
Peak Hour for Entire Intersection Begins at 12:45 PM																	
12:45 PM	0	0	0	0	0	2	0	2	0	0	0	0	0	0	0	0	2
01:00 PM	0	0	0	0	0	0	0	0	0	0	0	0	0	0	0	0	0
01:15 PM	0	0	0	0	0	3	0	3	0	0	0	0	0	0	0	0	3
01:30 PM	0	0	0	0	0	**4**	0	**4**	0	0	0	0	0	**1**	0	**1**	**5**
Total Volume	0	0	0	0	0	9	0	9	0	0	0	0	0	1	0	1	10
% App. Total	0	0	0		0	100	0		0	0	0		0	100	0		
PHF	.000	.000	.000	.000	.000	.563	.000	.563	.000	.000	.000	.000	.000	.250	.000	.250	.500

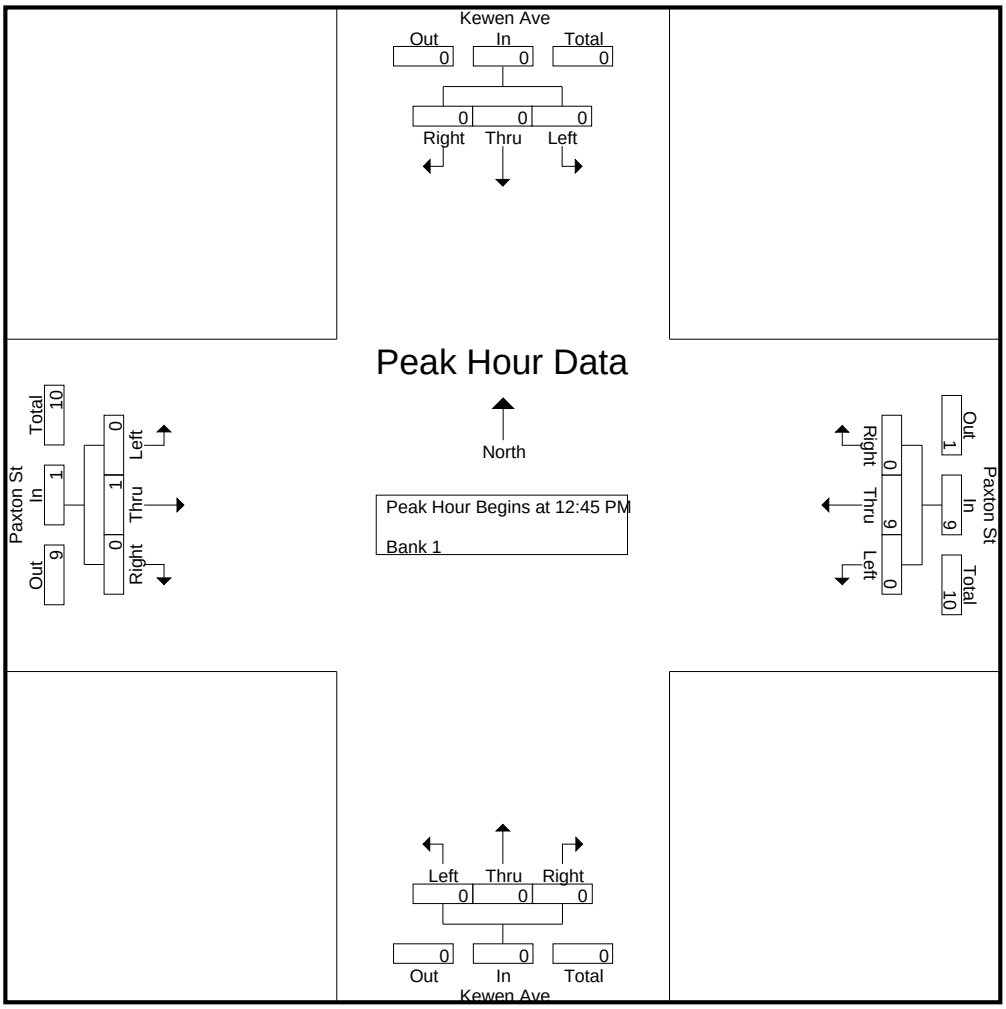

CITY TRAFFIC COUNTERS

626.991.7522

www.ctcounters.com

File Name : Paxton_Kewen_Buses
Site Code : 00000000
Start Date : 3/26/2015
Page No : 4

	Kewen Ave Southbound				Paxton St Westbound				Kewen Ave Northbound				Paxton St Eastbound				
Start Time	Left	Thru	Right	App. Total	Left	Thru	Right	App. Total	Left	Thru	Right	App. Total	Left	Thru	Right	App. Total	Int. Total
Peak Hour Analysis From 02:00 PM to 05:45 PM - Peak 1 of 1																	
Peak Hour for Entire Intersection Begins at 03:15 PM																	
03:15 PM	0	0	0	0	0	**1**	0	**1**	0	0	0	0	0	**8**	0	**8**	**9**
03:30 PM	0	0	0	0	0	1	0	1	0	0	0	0	0	3	0	3	4
03:45 PM	0	0	0	0	0	1	0	1	0	0	0	0	0	4	0	4	5
04:00 PM	0	0	0	0	0	1	0	1	0	0	0	0	0	4	0	4	5
Total Volume	0	0	0	0	0	4	0	4	0	0	0	0	0	19	0	19	23
% App. Total	0	0	0		0	100	0		0	0	0		0	100	0		
PHF	.000	.000	.000	.000	.000	1.00	.000	1.00	.000	.000	.000	.000	.000	.594	.000	.594	.639

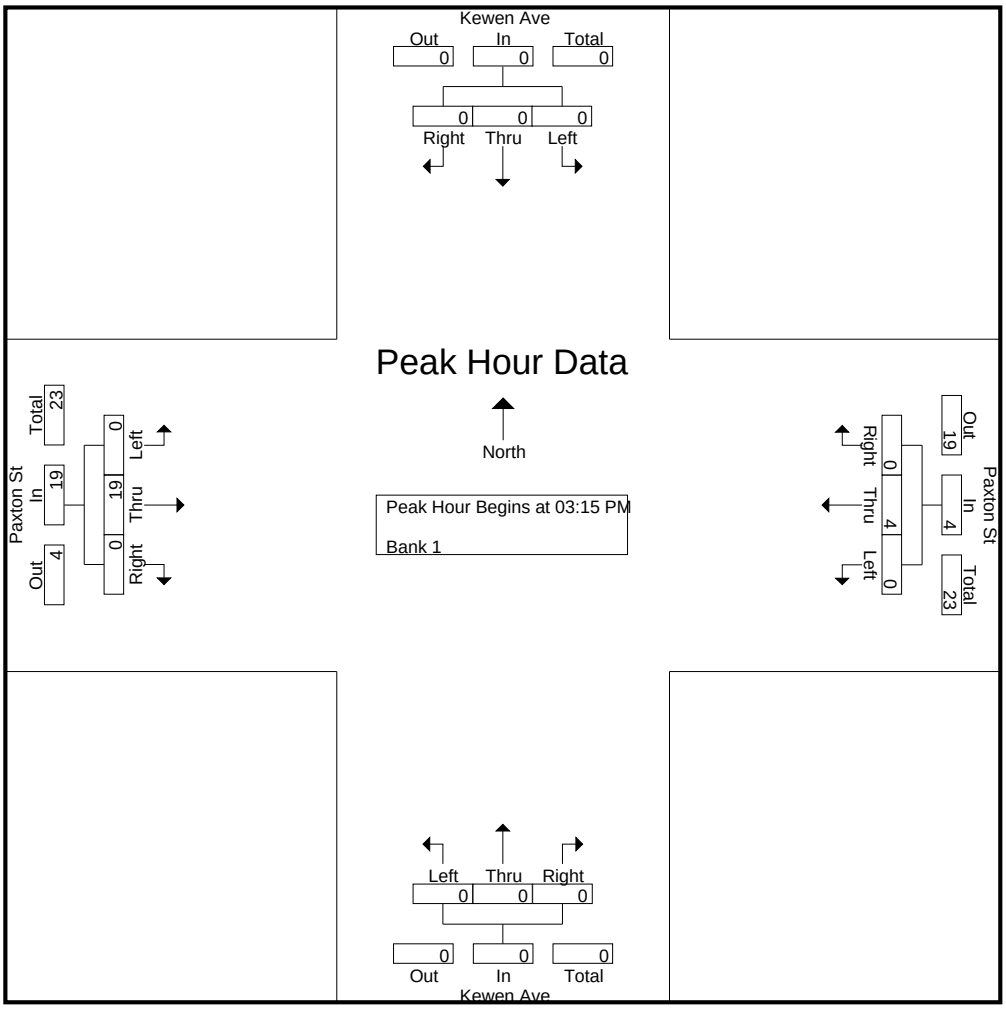

CITY TRAFFIC COUNTERS

626.991.7522

www.ctcounters.com

File Name : paxton_kewen_2axle
Site Code : 00000000
Start Date : 3/26/2015
Page No : 1

Groups Printed- Unshifted

	Southbound			Paxton St Westbound			Kewen Ave Northbound			Paxton St Eastbound			
Start Time	Left	Thru	Right	Left	Thru	Right	Left	Thru	Right	Left	Thru	Right	Int. Total
07:00 AM	0	0	0	1	7	0	0	0	0	0	7	1	16
07:15 AM	0	0	0	0	6	0	0	0	0	0	3	0	9
07:30 AM	0	0	0	0	3	0	0	0	1	0	7	0	11
07:45 AM	0	0	0	0	3	0	0	0	1	0	3	0	7
Total	0	0	0	1	19	0	0	0	2	0	20	1	43
08:00 AM	0	0	0	1	4	0	0	0	0	0	4	0	9
08:15 AM	0	0	0	0	8	0	0	0	0	0	9	0	17
08:30 AM	0	0	0	1	3	0	0	0	1	0	8	0	13
08:45 AM	0	0	0	0	4	0	0	0	0	0	3	0	7
Total	0	0	0	2	19	0	0	0	1	0	24	0	46
09:00 AM	0	0	0	0	3	0	0	0	1	0	8	0	12
09:15 AM	0	0	0	0	8	0	0	0	2	0	3	0	13
09:30 AM	0	0	0	0	4	0	0	0	0	0	1	0	5
09:45 AM	0	0	0	0	2	0	0	0	0	0	1	0	3
Total	0	0	0	0	17	0	0	0	3	0	13	0	33
12:00 PM	0	0	0	1	4	0	0	0	0	0	5	0	10
12:15 PM	0	0	0	0	2	0	0	0	0	0	4	0	6
12:30 PM	0	0	0	0	3	0	0	0	0	0	1	0	4
12:45 PM	0	0	0	0	5	0	1	0	0	0	2	0	8
Total	0	0	0	1	14	0	1	0	0	0	12	0	28
01:00 PM	0	0	0	0	1	0	0	0	0	0	2	0	3
01:15 PM	0	0	0	0	3	0	0	0	0	0	2	0	5
01:30 PM	0	0	0	0	9	0	0	0	0	0	4	0	13
01:45 PM	0	0	0	0	7	0	0	0	0	0	5	0	12
Total	0	0	0	0	20	0	0	0	0	0	13	0	33
03:00 PM	0	0	0	0	6	0	0	0	0	0	6	0	12
03:15 PM	0	0	0	0	2	0	0	0	2	0	8	0	12
03:30 PM	0	0	0	1	2	0	0	0	0	0	5	0	8
03:45 PM	0	0	0	0	4	0	0	0	0	0	3	0	7
Total	0	0	0	1	14	0	0	0	2	0	22	0	39
04:00 PM	0	0	0	0	5	0	0	0	0	0	3	0	8
04:15 PM	0	0	0	0	7	1	0	0	0	0	2	0	10
04:30 PM	0	0	0	1	1	0	0	0	1	0	7	0	10
04:45 PM	0	0	0	0	2	0	0	0	0	0	4	0	6
Total	0	0	0	1	15	1	0	0	1	0	16	0	34
05:00 PM	0	0	0	0	2	0	0	0	0	0	3	0	5
05:15 PM	0	0	0	0	1	0	0	0	1	0	3	0	5
05:30 PM	0	0	0	0	0	0	0	0	2	0	4	0	6
05:45 PM	0	0	0	0	2	0	0	0	1	0	0	0	3
Total	0	0	0	0	5	0	0	0	4	0	10	0	19
Grand Total	0	0	0	6	123	1	1	0	13	0	130	1	275
Apprch %	0	0	0	4.6	94.6	0.8	7.1	0	92.9	0	99.2	0.8	
Total %	0	0	0	2.2	44.7	0.4	0.4	0	4.7	0	47.3	0.4	

CITY TRAFFIC COUNTERS

626.991.7522

www.ctcounters.com

File Name : paxton_kewen_2axle
Site Code : 00000000
Start Date : 3/26/2015
Page No : 2

	Southbound				Paxton St Westbound				Kewen Ave Northbound				Paxton St Eastbound				
Start Time	Left	Thru	Right	App. Total	Left	Thru	Right	App. Total	Left	Thru	Right	App. Total	Left	Thru	Right	App. Total	Int. Total
Peak Hour Analysis From 07:00 AM to 09:45 AM - Peak 1 of 1																	
Peak Hour for Entire Intersection Begins at 08:15 AM																	
08:15 AM	0	0	0	0	0	**8**	0	**8**	0	0	0	0	0	**9**	0	**9**	**17**
08:30 AM	0	0	0	0	**1**	3	0	4	0	0	**1**	**1**	0	8	0	8	13
08:45 AM	0	0	0	0	0	4	0	4	0	0	0	0	0	3	0	3	7
09:00 AM	0	0	0	0	0	3	0	3	0	0	1	1	0	8	0	8	12
Total Volume	0	0	0	0	1	18	0	19	0	0	2	2	0	28	0	28	49
% App. Total	0	0	0		5.3	94.7	0		0	0	100		0	100	0		
PHF	.000	.000	.000	.000	.250	.563	.000	.594	.000	.000	.500	.500	.000	.778	.000	.778	.721

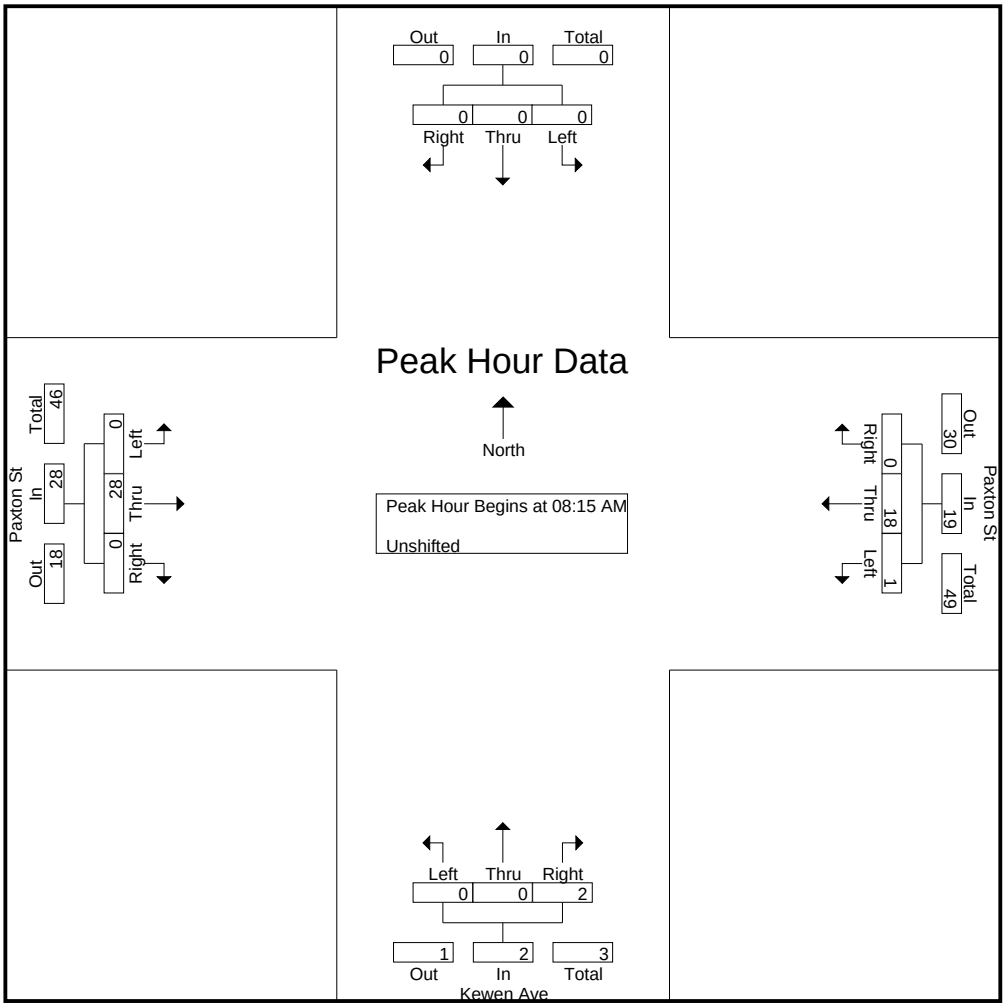

CITY TRAFFIC COUNTERS

626.991.7522

www.ctcounters.com

File Name : paxton_kewen_2axle
Site Code : 00000000
Start Date : 3/26/2015
Page No : 3

	Southbound				Paxton St Westbound				Kewen Ave Northbound				Paxton St Eastbound				
Start Time	Left	Thru	Right	App. Total	Left	Thru	Right	App. Total	Left	Thru	Right	App. Total	Left	Thru	Right	App. Total	Int. Total
Peak Hour Analysis From 10:00 AM to 01:45 PM - Peak 1 of 1																	
Peak Hour for Entire Intersection Begins at 01:00 PM																	
01:00 PM	0	0	0	0	0	1	0	1	0	0	0	0	0	2	0	2	3
01:15 PM	0	0	0	0	0	3	0	3	0	0	0	0	0	2	0	2	5
01:30 PM	0	0	0	0	0	**9**	0	**9**	0	0	0	0	0	4	0	4	**13**
01:45 PM	0	0	0	0	0	7	0	7	0	0	0	0	0	**5**	0	**5**	12
Total Volume	0	0	0	0	0	20	0	20	0	0	0	0	0	13	0	13	33
% App. Total	0	0	0		0	100	0		0	0	0		0	100	0		
PHF	.000	.000	.000	.000	.000	.556	.000	.556	.000	.000	.000	.000	.000	.650	.000	.650	.635

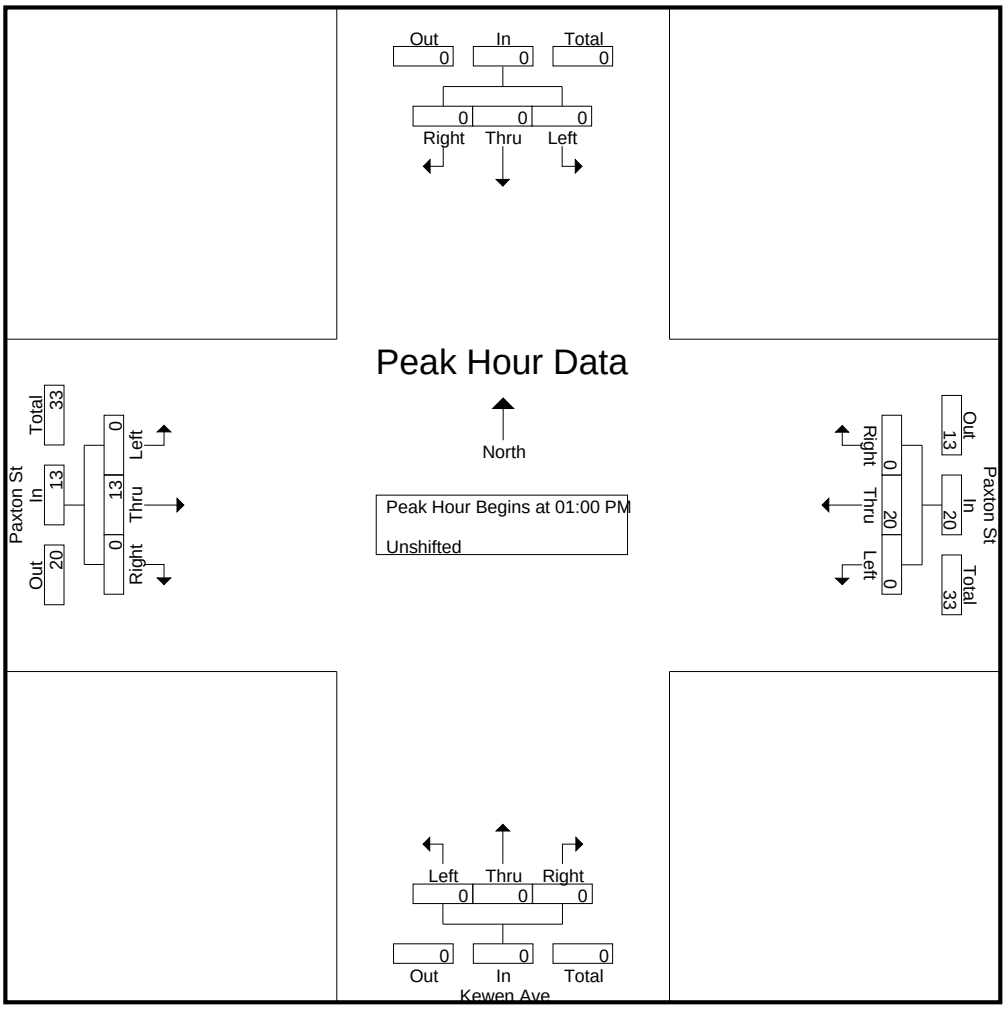

CITY TRAFFIC COUNTERS

626.991.7522

www.ctcounters.com

File Name : paxton_kewen_2axle
Site Code : 00000000
Start Date : 3/26/2015
Page No : 4

	Southbound				Paxton St Westbound				Kewen Ave Northbound				Paxton St Eastbound				
Start Time	Left	Thru	Right	App. Total	Left	Thru	Right	App. Total	Left	Thru	Right	App. Total	Left	Thru	Right	App. Total	Int. Total
Peak Hour Analysis From 02:00 PM to 05:45 PM - Peak 1 of 1																	
Peak Hour for Entire Intersection Begins at 03:00 PM																	
03:00 PM	0	0	0	0	0	**6**	0	**6**	0	0	0	0	0	6	0	6	**12**
03:15 PM	0	0	0	0	0	2	0	2	0	0	**2**	**2**	0	**8**	0	**8**	12
03:30 PM	0	0	0	0	**1**	2	0	3	0	0	0	0	0	5	0	5	8
03:45 PM	0	0	0	0	0	4	0	4	0	0	0	0	0	3	0	3	7
Total Volume	0	0	0	0	1	14	0	15	0	0	2	2	0	22	0	22	39
% App. Total	0	0	0		6.7	93.3	0		0	0	100		0	100	0		
PHF	.000	.000	.000	.000	.250	.583	.000	.625	.000	.000	.250	.250	.000	.688	.000	.688	.813

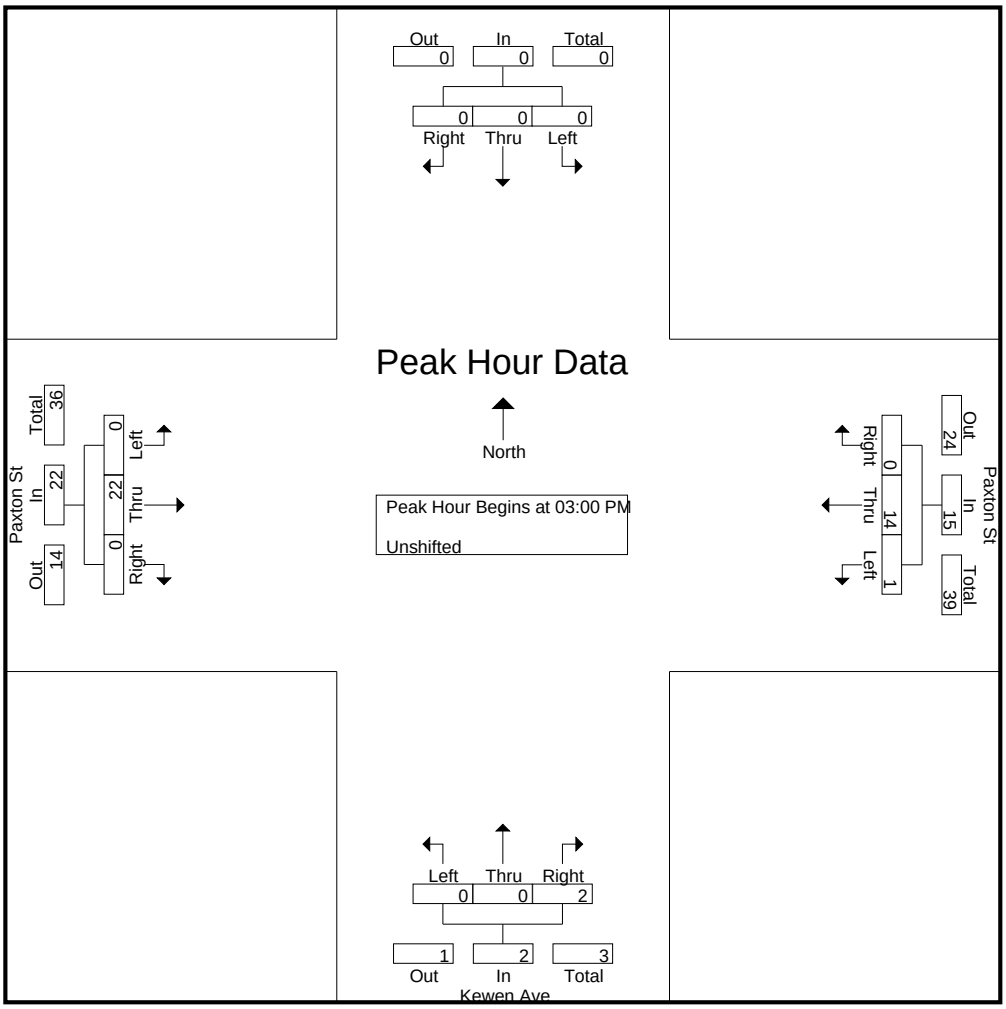

CITY TRAFFIC COUNTERS

626.991.7522

www.ctcounters.com

File Name : Paxton_Kewen_3axle
Site Code : 00000000
Start Date : 3/26/2015
Page No : 1

Groups Printed- Bank 1

	Kewen Ave Southbound			Paxton St Westbound			Kewen Ave Northbound			Paxton St Eastbound			
Start Time	Left	Thru	Right	Left	Thru	Right	Left	Thru	Right	Left	Thru	Right	Int. Total
07:15 AM	0	0	0	0	3	0	0	0	0	0	0	0	3
07:30 AM	0	0	0	0	0	0	0	0	0	0	1	0	1
Total	0	0	0	0	3	0	0	0	0	0	1	0	4
08:00 AM	0	0	0	0	0	0	0	0	0	0	1	0	1
08:30 AM	0	0	0	0	0	0	0	0	0	0	1	1	2
08:45 AM	0	0	0	0	1	0	0	0	0	0	1	0	2
Total	0	0	0	0	1	0	0	0	0	0	3	1	5
09:00 AM	0	0	0	0	0	0	0	0	0	0	1	0	1
09:30 AM	0	0	0	0	0	0	0	0	0	0	1	0	1
09:45 AM	0	0	0	0	2	0	0	0	0	0	2	0	4
Total	0	0	0	0	2	0	0	0	0	0	4	0	6
12:00 PM	0	0	0	0	1	0	0	0	0	0	2	0	3
12:45 PM	0	0	0	0	1	0	0	0	0	0	0	0	1
Total	0	0	0	0	2	0	0	0	0	0	2	0	4
01:15 PM	0	0	0	0	0	0	0	0	0	0	3	0	3
01:45 PM	0	0	0	0	0	0	0	0	0	0	2	0	2
Total	0	0	0	0	0	0	0	0	0	0	5	0	5
03:00 PM	0	0	0	0	0	0	0	0	0	0	1	0	1
03:15 PM	0	0	0	0	2	0	0	0	0	0	1	0	3
03:30 PM	0	0	0	0	1	0	0	0	0	0	0	0	1
Total	0	0	0	0	3	0	0	0	0	0	2	0	5
04:00 PM	0	0	0	0	0	0	0	0	0	0	4	0	4
04:15 PM	0	0	0	0	0	0	0	0	0	0	2	0	2
04:45 PM	0	0	0	0	0	0	0	0	0	0	1	0	1
Total	0	0	0	0	0	0	0	0	0	0	7	0	7
05:00 PM	0	0	0	0	0	0	0	0	0	0	2	0	2
05:30 PM	0	0	0	0	1	0	0	0	0	0	2	0	3
Total	0	0	0	0	1	0	0	0	0	0	4	0	5
Grand Total	0	0	0	0	12	0	0	0	0	0	28	1	41
Apprch %	0	0	0	0	100	0	0	0	0	0	96.6	3.4	
Total %	0	0	0	0	29.3	0	0	0	0	0	68.3	2.4	

CITY TRAFFIC COUNTERS

626.991.7522

www.ctcounters.com

File Name : Paxton_Kewen_3axle
Site Code : 00000000
Start Date : 3/26/2015
Page No : 2

	Kewen Ave Southbound				Paxton St Westbound				Kewen Ave Northbound				Paxton St Eastbound				
Start Time	Left	Thru	Right	App. Total	Left	Thru	Right	App. Total	Left	Thru	Right	App. Total	Left	Thru	Right	App. Total	Int. Total
Peak Hour Analysis From 07:00 AM to 09:45 AM - Peak 1 of 1																	
Peak Hour for Entire Intersection Begins at 09:00 AM																	
09:00 AM	0	0	0	0	0	0	0	0	0	0	0	0	0	1	0	1	1
09:15 AM	0	0	0	0	0	0	0	0	0	0	0	0	0	0	0	0	0
09:30 AM	0	0	0	0	0	0	0	0	0	0	0	0	0	1	0	1	1
09:45 AM	0	0	0	0	0	**2**	0	**2**	0	0	0	0	0	**2**	0	**2**	**4**
Total Volume	0	0	0	0	0	2	0	2	0	0	0	0	0	4	0	4	6
% App. Total	0	0	0		0	100	0		0	0	0		0	100	0		
PHF	.000	.000	.000	.000	.000	.250	.000	.250	.000	.000	.000	.000	.000	.500	.000	.500	.375

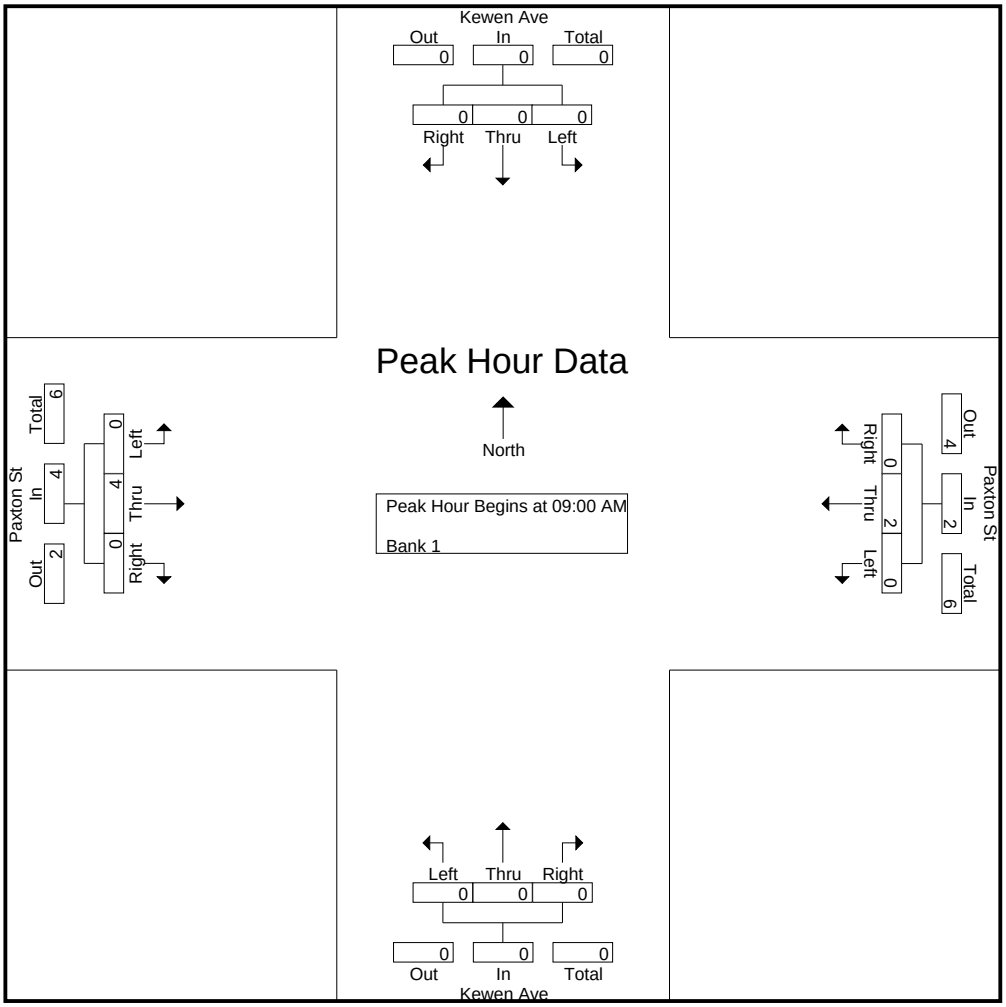

CITY TRAFFIC COUNTERS

626.991.7522

www.ctcounters.com

File Name : Paxton_Kewen_3axle
Site Code : 00000000
Start Date : 3/26/2015
Page No : 3

	Kewen Ave Southbound				Paxton St Westbound				Kewen Ave Northbound				Paxton St Eastbound				
Start Time	Left	Thru	Right	App. Total	Left	Thru	Right	App. Total	Left	Thru	Right	App. Total	Left	Thru	Right	App. Total	Int. Total
Peak Hour Analysis From 10:00 AM to 01:45 PM - Peak 1 of 1																	
Peak Hour for Entire Intersection Begins at 01:00 PM																	
01:00 PM	0	0	0	0	0	0	0	0	0	0	0	0	0	0	0	0	0
01:15 PM	0	0	0	0	0	0	0	0	0	0	0	0	0	**3**	0	**3**	**3**
01:30 PM	0	0	0	0	0	0	0	0	0	0	0	0	0	0	0	0	0
01:45 PM	0	0	0	0	0	0	0	0	0	0	0	0	0	2	0	2	2
Total Volume	0	0	0	0	0	0	0	0	0	0	0	0	0	5	0	5	5
% App. Total	0	0	0		0	0	0		0	0	0		0	100	0		
PHF	.000	.000	.000	.000	.000	.000	.000	.000	.000	.000	.000	.000	.000	.417	.000	.417	.417

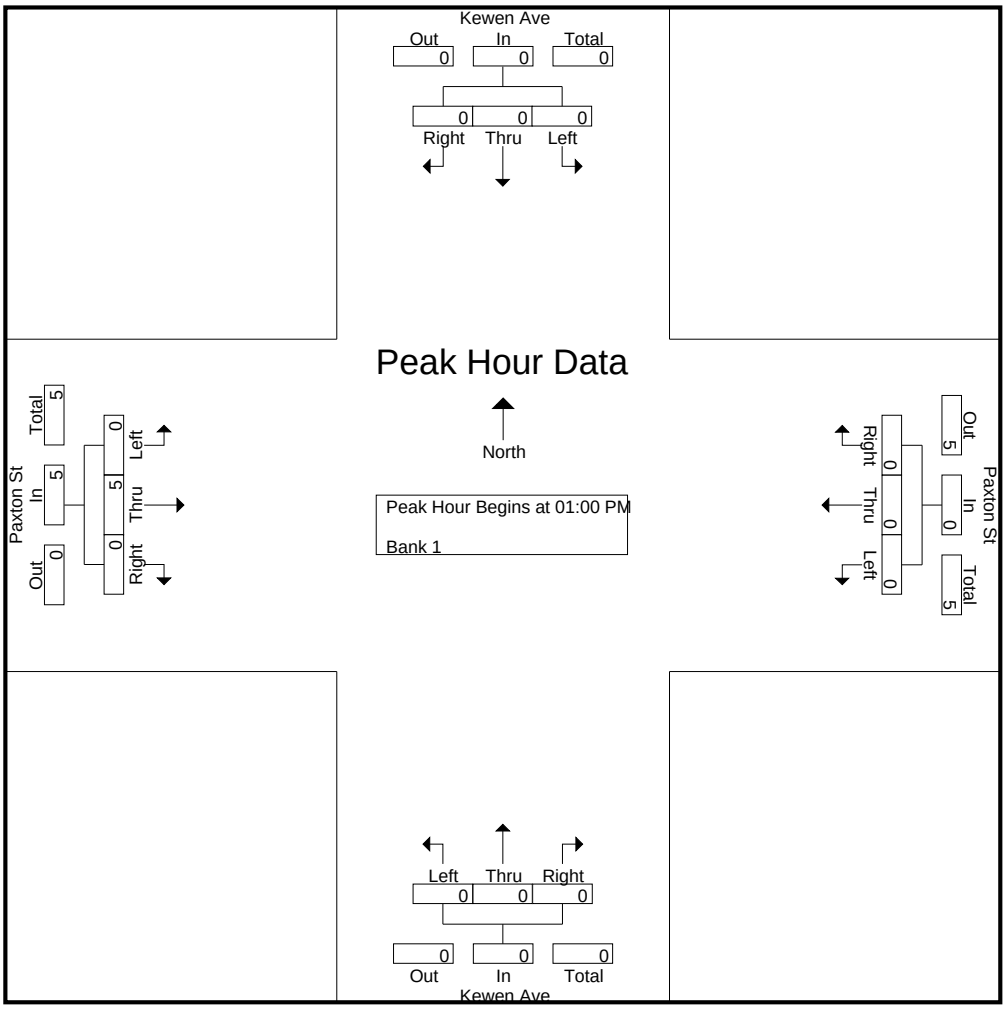

CITY TRAFFIC COUNTERS

626.991.7522

www.ctcounters.com

File Name : Paxton_Kewen_3axle
Site Code : 00000000
Start Date : 3/26/2015
Page No : 4

	Kewen Ave Southbound				Paxton St Westbound				Kewen Ave Northbound				Paxton St Eastbound				
Start Time	Left	Thru	Right	App. Total	Left	Thru	Right	App. Total	Left	Thru	Right	App. Total	Left	Thru	Right	App. Total	Int. Total
Peak Hour Analysis From 02:00 PM to 05:45 PM - Peak 1 of 1																	
Peak Hour for Entire Intersection Begins at 03:15 PM																	
03:15 PM	0	0	0	0	0	**2**	0	**2**	0	0	0	0	0	1	0	1	3
03:30 PM	0	0	0	0	0	1	0	1	0	0	0	0	0	0	0	0	1
03:45 PM	0	0	0	0	0	0	0	0	0	0	0	0	0	0	0	0	0
04:00 PM	0	0	0	0	0	0	0	0	0	0	0	0	0	**4**	0	**4**	**4**
Total Volume	0	0	0	0	0	3	0	3	0	0	0	0	0	5	0	5	8
% App. Total	0	0	0		0	100	0		0	0	0		0	100	0		
PHF	.000	.000	.000	.000	.000	.375	.000	.375	.000	.000	.000	.000	.000	.313	.000	.313	.500

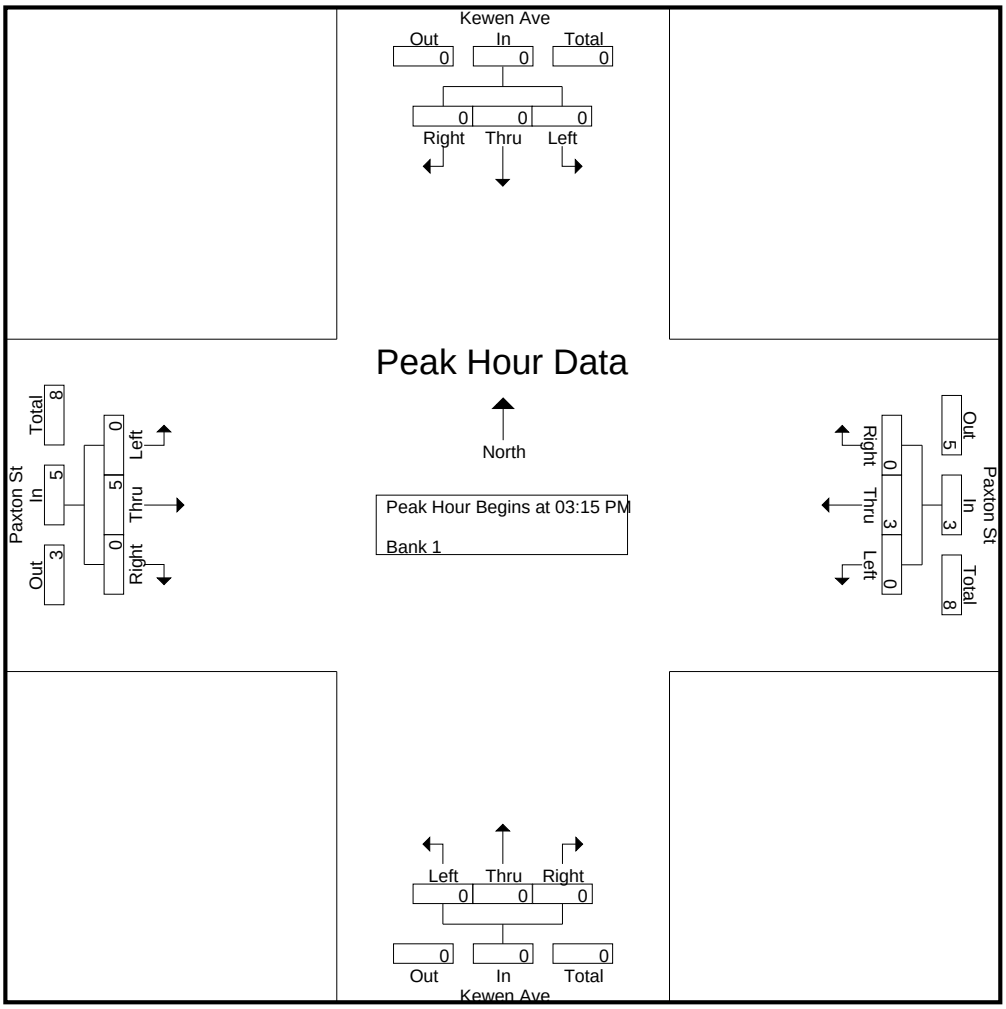

CITY TRAFFIC COUNTERS

626.991.7522

www.ctcounters.com

File Name : Paxton_Kewen_4axle
Site Code : 00000000
Start Date : 3/26/2015
Page No : 1

Groups Printed- Bank 2

	Kewen Ave Southbound			Paxton St Westbound			Kewen Ave Northbound			Paxton St Eastbound			
Start Time	Left	Thru	Right	Left	Thru	Right	Left	Thru	Right	Left	Thru	Right	Int. Total
07:15 AM	0	0	0	0	2	0	0	0	0	0	0	0	2
07:45 AM	0	0	0	0	0	0	0	0	0	0	1	0	1
Total	0	0	0	0	2	0	0	0	0	0	1	0	3
08:15 AM	0	0	0	0	1	0	0	0	0	0	0	0	1
Total	0	0	0	0	1	0	0	0	0	0	0	0	1
09:15 AM	0	0	0	0	1	0	0	0	0	0	0	0	1
09:45 AM	0	0	0	0	1	0	0	0	0	0	0	0	1
Total	0	0	0	0	2	0	0	0	0	0	0	0	2
12:15 PM	0	0	0	0	0	0	0	0	0	0	1	0	1
Total	0	0	0	0	0	0	0	0	0	0	1	0	1
04:00 PM	0	0	0	0	1	0	0	0	0	0	0	0	1
Total	0	0	0	0	1	0	0	0	0	0	0	0	1
Grand Total	0	0	0	0	6	0	0	0	0	0	2	0	8
Apprch %	0	0	0	0	100	0	0	0	0	0	100	0	
Total %	0	0	0	0	75	0	0	0	0	0	25	0	

CITY TRAFFIC COUNTERS

626.991.7522

www.ctcounters.com

File Name : Paxton_Kewen_4axle
Site Code : 00000000
Start Date : 3/26/2015
Page No : 2

	Kewen Ave Southbound				Paxton St Westbound				Kewen Ave Northbound				Paxton St Eastbound				
Start Time	Left	Thru	Right	App. Total	Left	Thru	Right	App. Total	Left	Thru	Right	App. Total	Left	Thru	Right	App. Total	Int. Total
Peak Hour Analysis From 07:00 AM to 09:45 AM - Peak 1 of 1																	
Peak Hour for Entire Intersection Begins at 07:00 AM																	
07:00 AM	0	0	0	0	0	0	0	0	0	0	0	0	0	0	0	0	0
07:15 AM	0	0	0	0	0	**2**	0	**2**	0	0	0	0	0	0	0	0	**2**
07:30 AM	0	0	0	0	0	0	0	0	0	0	0	0	0	0	0	0	0
07:45 AM	0	0	0	0	0	0	0	0	0	0	0	0	0	**1**	0	**1**	1
Total Volume	0	0	0	0	0	2	0	2	0	0	0	0	0	1	0	1	3
% App. Total	0	0	0		0	100	0		0	0	0		0	100	0		
PHF	.000	.000	.000	.000	.000	.250	.000	.250	.000	.000	.000	.000	.000	.250	.000	.250	.375

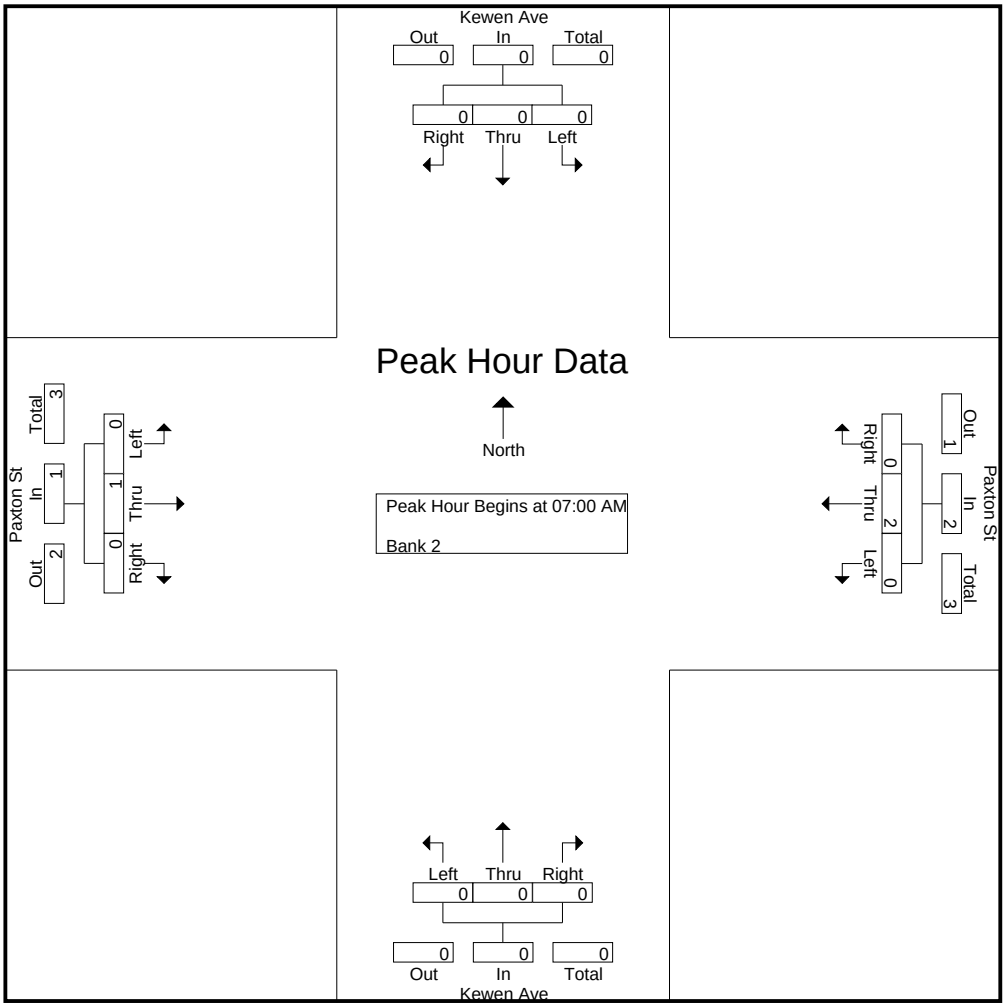

CITY TRAFFIC COUNTERS

626.991.7522

www.ctcounters.com

File Name : Paxton_Kewen_4axle
Site Code : 00000000
Start Date : 3/26/2015
Page No : 3

	Kewen Ave Southbound				Paxton St Westbound				Kewen Ave Northbound				Paxton St Eastbound				
Start Time	Left	Thru	Right	App. Total	Left	Thru	Right	App. Total	Left	Thru	Right	App. Total	Left	Thru	Right	App. Total	Int. Total
Peak Hour Analysis From 10:00 AM to 01:45 PM - Peak 1 of 1																	
Peak Hour for Entire Intersection Begins at 11:30 AM																	
11:30 AM	0	0	0	0	0	0	0	0	0	0	0	0	0	0	0	0	0
11:45 AM	0	0	0	0	0	0	0	0	0	0	0	0	0	0	0	0	0
12:00 PM	0	0	0	0	0	0	0	0	0	0	0	0	0	0	0	0	0
12:15 PM	0	0	0	0	0	0	0	0	0	0	0	0	0	**1**	0	**1**	**1**
Total Volume	0	0	0	0	0	0	0	0	0	0	0	0	0	1	0	1	1
% App. Total	0	0	0		0	0	0		0	0	0		0	100	0		
PHF	.000	.000	.000	.000	.000	.000	.000	.000	.000	.000	.000	.000	.000	.250	.000	.250	.250

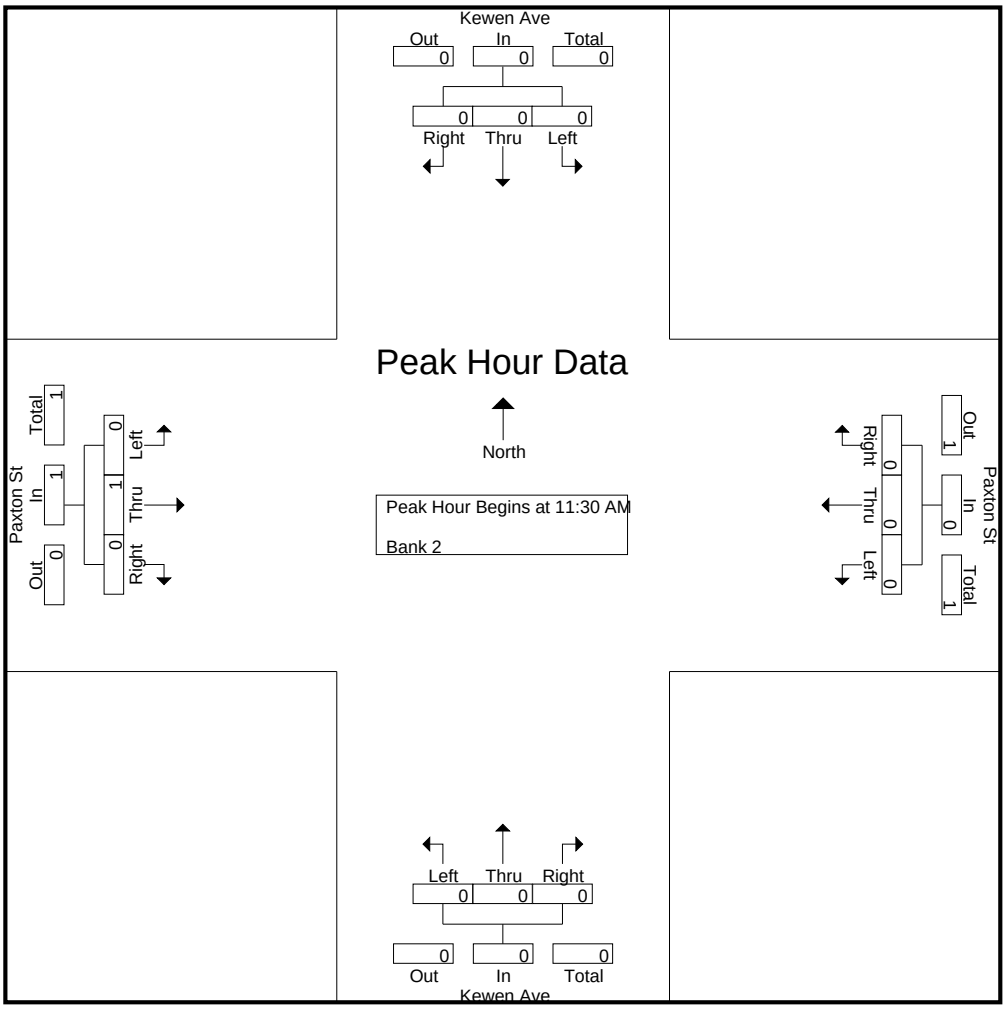

CITY TRAFFIC COUNTERS

626.991.7522

www.ctcounters.com

File Name : Paxton_Kewen_4axle
Site Code : 00000000
Start Date : 3/26/2015
Page No : 4

	Kewen Ave Southbound				Paxton St Westbound				Kewen Ave Northbound				Paxton St Eastbound				
Start Time	Left	Thru	Right	App. Total	Left	Thru	Right	App. Total	Left	Thru	Right	App. Total	Left	Thru	Right	App. Total	Int. Total
Peak Hour Analysis From 02:00 PM to 05:45 PM - Peak 1 of 1																	
Peak Hour for Entire Intersection Begins at 03:15 PM																	
03:15 PM	0	0	0	0	0	0	0	0	0	0	0	0	0	0	0	0	0
03:30 PM	0	0	0	0	0	0	0	0	0	0	0	0	0	0	0	0	0
03:45 PM	0	0	0	0	0	0	0	0	0	0	0	0	0	0	0	0	0
04:00 PM	0	0	0	0	0	**1**	0	**1**	0	0	0	0	0	0	0	0	**1**
Total Volume	0	0	0	0	0	1	0	1	0	0	0	0	0	0	0	0	1
% App. Total	0	0	0		0	100	0		0	0	0		0	0	0		
PHF	.000	.000	.000	.000	.000	.250	.000	.250	.000	.000	.000	.000	.000	.000	.000	.000	.250

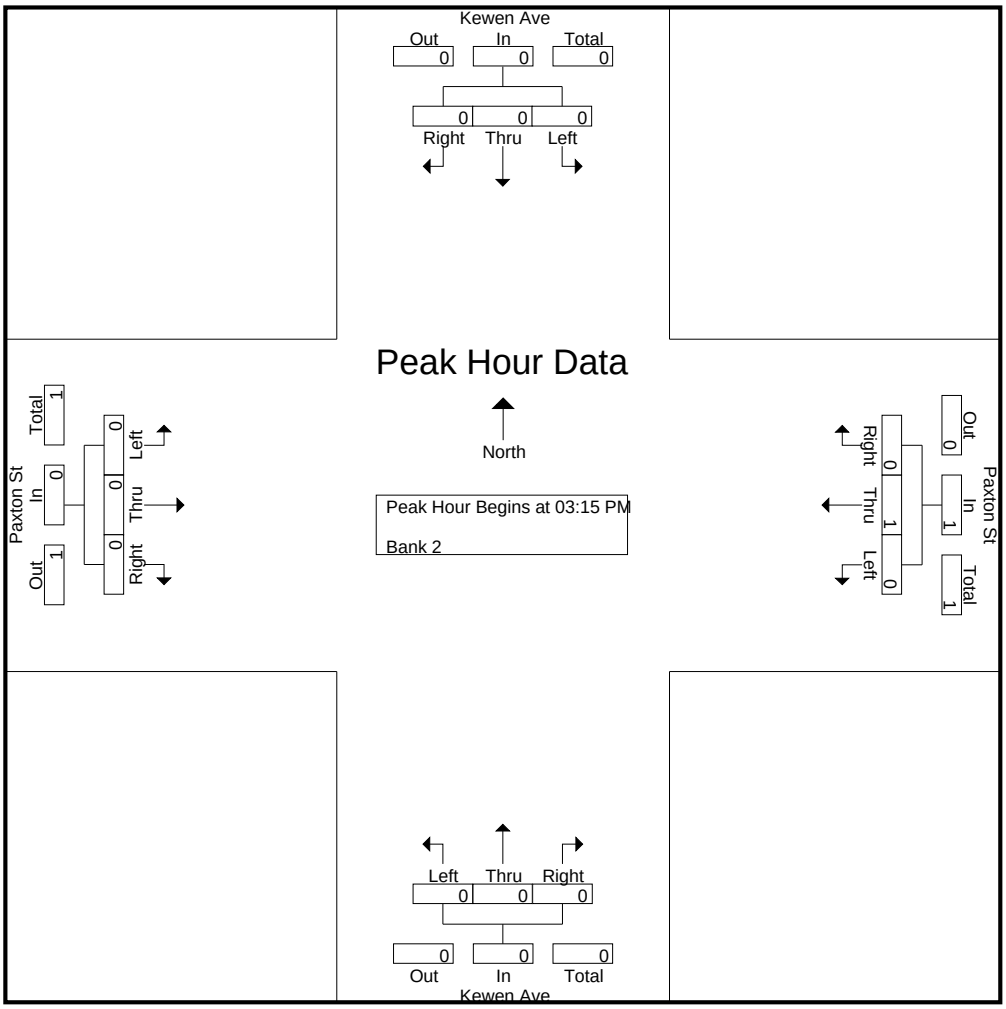

CITY TRAFFIC COUNTERS

626.991.7522

www.ctcounters.com

File Name : paxton_kewen_5axle
Site Code : 00000000
Start Date : 3/26/2015
Page No : 1

Groups Printed- Unshifted

	Kewen Ave Southbound			Paxton St Westbound			Kewen Ave Northbound			Paxton St Eastbound			
Start Time	Left	Thru	Right	Left	Thru	Right	Left	Thru	Right	Left	Thru	Right	Int. Total
12:45 PM	0	0	0	0	1	0	0	0	0	0	0	0	1
Total	0	0	0	0	1	0	0	0	0	0	0	0	1
03:00 PM	0	0	0	0	0	0	0	0	0	0	1	0	1
Total	0	0	0	0	0	0	0	0	0	0	1	0	1
04:00 PM	0	0	0	0	1	0	0	0	0	0	1	0	2
04:30 PM	0	0	0	0	0	0	0	0	0	0	1	0	1
Total	0	0	0	0	1	0	0	0	0	0	2	0	3
Grand Total	0	0	0	0	2	0	0	0	0	0	3	0	5
Apprch %	0	0	0	0	100	0	0	0	0	0	100	0	
Total %	0	0	0	0	40	0	0	0	0	0	60	0	

CITY TRAFFIC COUNTERS

626.991.7522

www.ctcounters.com

File Name : paxton_kewen_5axle
Site Code : 00000000
Start Date : 3/26/2015
Page No : 2

	Kewen Ave Southbound				Paxton St Westbound				Kewen Ave Northbound				Paxton St Eastbound				
Start Time	Left	Thru	Right	App. Total	Left	Thru	Right	App. Total	Left	Thru	Right	App. Total	Left	Thru	Right	App. Total	Int. Total
Peak Hour Analysis From 07:00 AM to 09:45 AM - Peak 1 of 1																	
Peak Hour for Entire Intersection Begins at 07:00 AM																	
07:00 AM	0	0	0	0	0	0	0	0	0	0	0	0	0	0	0	0	0
07:15 AM	0	0	0	0	0	0	0	0	0	0	0	0	0	0	0	0	0
07:30 AM	0	0	0	0	0	0	0	0	0	0	0	0	0	0	0	0	0
07:45 AM	0	0	0	0	0	0	0	0	0	0	0	0	0	0	0	0	0
Total Volume	0	0	0	0	0	0	0	0	0	0	0	0	0	0	0	0	0
% App. Total	0	0	0		0	0	0		0	0	0		0	0	0		
PHF	.000	.000	.000	.000	.000	.000	.000	.000	.000	.000	.000	.000	.000	.000	.000	.000	.000

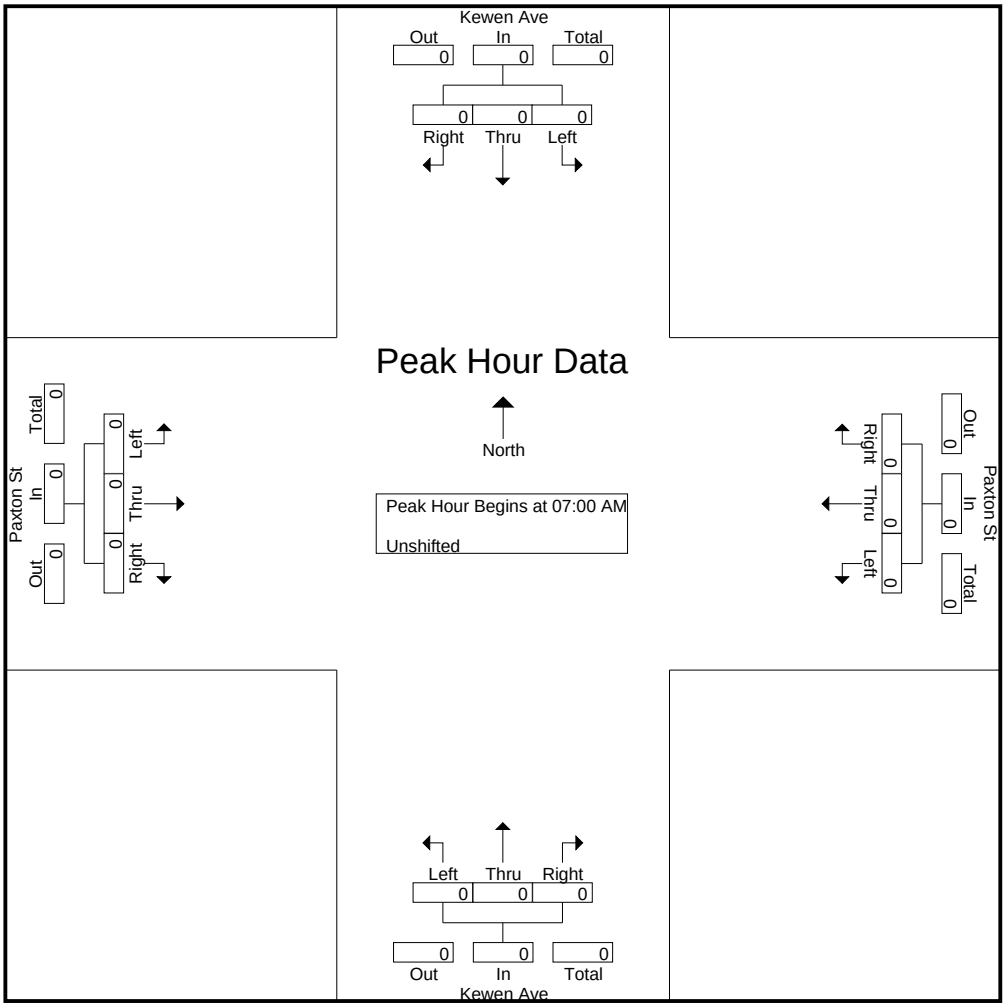

CITY TRAFFIC COUNTERS

626.991.7522

www.ctcounters.com

File Name : paxton_kewen_5axle
Site Code : 00000000
Start Date : 3/26/2015
Page No : 3

	Kewen Ave Southbound				Paxton St Westbound				Kewen Ave Northbound				Paxton St Eastbound				
Start Time	Left	Thru	Right	App. Total	Left	Thru	Right	App. Total	Left	Thru	Right	App. Total	Left	Thru	Right	App. Total	Int. Total
Peak Hour Analysis From 10:00 AM to 01:45 PM - Peak 1 of 1																	
Peak Hour for Entire Intersection Begins at 12:00 PM																	
12:00 PM	0	0	0	0	0	0	0	0	0	0	0	0	0	0	0	0	0
12:15 PM	0	0	0	0	0	0	0	0	0	0	0	0	0	0	0	0	0
12:30 PM	0	0	0	0	0	0	0	0	0	0	0	0	0	0	0	0	0
12:45 PM	0	0	0	0	0	**1**	0	**1**	0	0	0	0	0	0	0	0	**1**
Total Volume	0	0	0	0	0	1	0	1	0	0	0	0	0	0	0	0	1
% App. Total	0	0	0		0	100	0		0	0	0		0	0	0		
PHF	.000	.000	.000	.000	.000	.250	.000	.250	.000	.000	.000	.000	.000	.000	.000	.000	.250

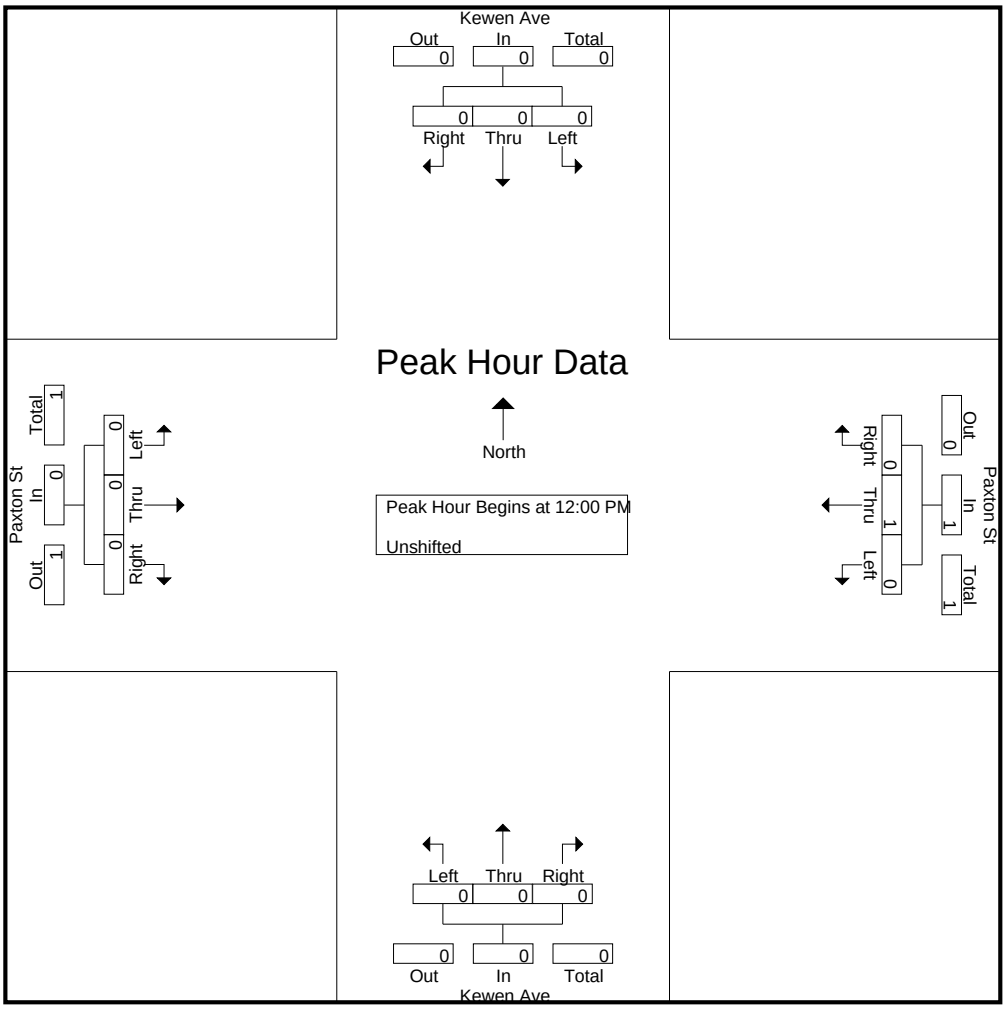

CITY TRAFFIC COUNTERS

626.991.7522

www.ctcounters.com

File Name : paxton_kewen_5axle
Site Code : 00000000
Start Date : 3/26/2015
Page No : 4

	Kewen Ave Southbound				Paxton St Westbound				Kewen Ave Northbound				Paxton St Eastbound				
Start Time	Left	Thru	Right	App. Total	Left	Thru	Right	App. Total	Left	Thru	Right	App. Total	Left	Thru	Right	App. Total	Int. Total
Peak Hour Analysis From 02:00 PM to 05:45 PM - Peak 1 of 1																	
Peak Hour for Entire Intersection Begins at 03:45 PM																	
03:45 PM	0	0	0	0	0	0	0	0	0	0	0	0	0	0	0	0	0
04:00 PM	0	0	0	0	0	**1**	0	**1**	0	0	0	0	0	**1**	0	**1**	**2**
04:15 PM	0	0	0	0	0	0	0	0	0	0	0	0	0	0	0	0	0
04:30 PM	0	0	0	0	0	0	0	0	0	0	0	0	0	1	0	1	1
Total Volume	0	0	0	0	0	1	0	1	0	0	0	0	0	2	0	2	3
% App. Total	0	0	0		0	100	0		0	0	0		0	100	0		
PHF	.000	.000	.000	.000	.000	.250	.000	.250	.000	.000	.000	.000	.000	.500	.000	.500	.375

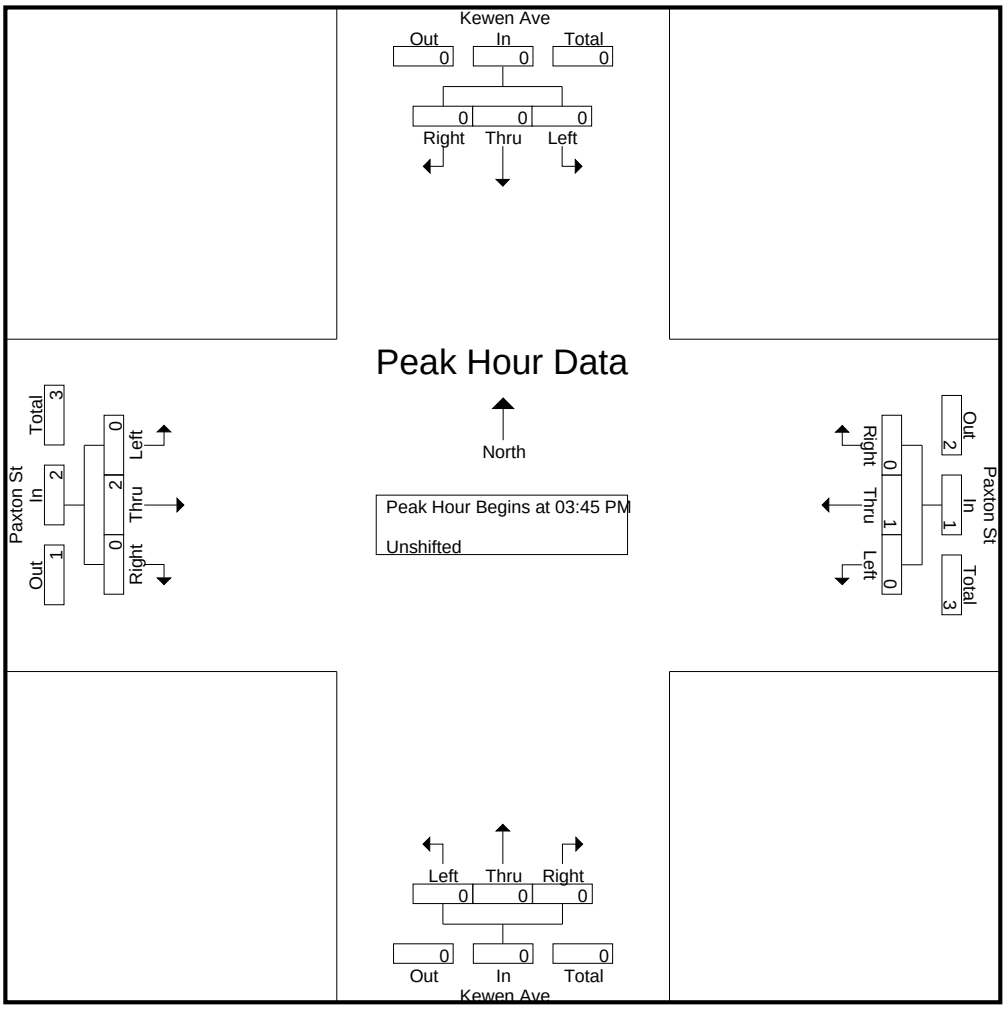

CITY TRAFFIC COUNTERS

626.991.7522

www.ctcounters.com

File Name : Paxton_Telfair
Site Code : 00000000
Start Date : 3/26/2015
Page No : 1

Groups Printed- Unshifted

	Telfair Ave Southbound			Paxton St Westbound			Telfair Ave Northbound			Paxton St Eastbound			
Start Time	Left	Thru	Right	Left	Thru	Right	Left	Thru	Right	Left	Thru	Right	Int. Total
07:00 AM	7	3	24	10	118	5	10	6	10	12	113	8	326
07:15 AM	14	9	23	11	127	4	14	3	10	15	158	15	403
07:30 AM	16	5	28	21	162	8	19	11	5	23	174	21	493
07:45 AM	12	16	27	17	172	7	14	24	14	29	183	26	541
Total	49	33	102	59	579	24	57	44	39	79	628	70	1763
08:00 AM	4	8	16	17	145	9	10	17	11	21	138	14	410
08:15 AM	4	7	22	15	120	4	7	3	7	16	132	9	346
08:30 AM	2	1	22	5	106	2	7	3	7	15	112	6	288
08:45 AM	6	2	9	5	87	5	10	6	5	11	98	3	247
Total	16	18	69	42	458	20	34	29	30	63	480	32	1291
09:00 AM	3	5	10	2	80	2	2	4	2	9	65	4	188
09:15 AM	1	1	13	7	84	3	4	1	6	11	89	1	221
09:30 AM	7	2	12	3	82	2	8	5	3	10	96	4	234
09:45 AM	3	0	10	3	80	4	0	3	6	9	117	3	238
Total	14	8	45	15	326	11	14	13	17	39	367	12	881
12:00 PM	1	2	16	3	97	3	6	2	4	15	114	4	267
12:15 PM	4	3	14	6	110	8	3	2	9	16	96	7	278
12:30 PM	4	3	9	7	116	0	5	1	5	16	97	8	271
12:45 PM	2	5	12	6	77	5	10	3	11	7	119	6	263
Total	11	13	51	22	400	16	24	8	29	54	426	25	1079
01:00 PM	4	2	8	5	104	2	7	5	10	22	99	1	269
01:15 PM	4	2	13	3	106	5	4	3	5	12	98	4	259
01:30 PM	2	2	5	4	117	6	6	1	6	16	98	4	267
01:45 PM	3	3	14	11	105	4	3	6	6	15	107	6	283
Total	13	9	40	23	432	17	20	15	27	65	402	15	1078
03:00 PM	5	1	17	4	117	7	10	5	7	21	112	7	313
03:15 PM	9	4	16	9	108	5	5	8	5	25	144	11	349
03:30 PM	5	4	13	11	149	8	6	5	9	25	148	6	389
03:45 PM	5	6	10	7	159	11	4	8	14	17	154	9	404
Total	24	15	56	31	533	31	25	26	35	88	558	33	1455
04:00 PM	5	4	13	15	142	3	6	10	17	25	150	12	402
04:15 PM	4	3	11	9	146	8	4	11	13	23	164	8	404
04:30 PM	5	6	11	9	160	3	15	9	14	23	150	8	413
04:45 PM	8	4	12	5	147	8	12	8	10	31	162	11	418
Total	22	17	47	38	595	22	37	38	54	102	626	39	1637
05:00 PM	8	4	13	12	159	8	8	14	13	15	195	9	458
05:15 PM	7	4	12	13	130	7	9	15	10	24	220	13	464
05:30 PM	7	14	15	12	151	13	8	8	7	35	197	12	479
05:45 PM	5	7	18	10	164	7	13	11	13	25	210	10	493
Total	27	29	58	47	604	35	38	48	43	99	822	44	1894
Grand Total	176	142	468	277	3927	176	249	221	274	589	4309	270	11078
Apprch %	22.4	18.1	59.5	6.3	89.7	4	33.5	29.7	36.8	11.4	83.4	5.2	
Total %	1.6	1.3	4.2	2.5	35.4	1.6	2.2	2	2.5	5.3	38.9	2.4	

CITY TRAFFIC COUNTERS

626.991.7522

www.ctcounters.com

File Name : Paxton_Telfair
Site Code : 00000000
Start Date : 3/26/2015
Page No : 2

	Telfair Ave Southbound				Paxton St Westbound				Telfair Ave Northbound				Paxton St Eastbound				
Start Time	Left	Thru	Right	App. Total	Left	Thru	Right	App. Total	Left	Thru	Right	App. Total	Left	Thru	Right	App. Total	Int. Total
Peak Hour Analysis From 07:00 AM to 09:45 AM - Peak 1 of 1																	
Peak Hour for Entire Intersection Begins at 07:15 AM																	
07:15 AM	14	9	23	46	11	127	4	142	14	3	10	27	15	158	15	188	403
07:30 AM	**16**	5	**28**	49	**21**	162	8	191	**19**	11	5	35	23	174	21	218	493
07:45 AM	12	**16**	27	**55**	17	**172**	7	**196**	14	**24**	**14**	**52**	**29**	**183**	**26**	**238**	**541**
08:00 AM	4	8	16	28	17	145	**9**	171	10	17	11	38	21	138	14	173	410
Total Volume	46	38	94	178	66	606	28	700	57	55	40	152	88	653	76	817	1847
% App. Total	25.8	21.3	52.8		9.4	86.6	4		37.5	36.2	26.3		10.8	79.9	9.3		
PHF	.719	.594	.839	.809	.786	.881	.778	.893	.750	.573	.714	.731	.759	.892	.731	.858	.854

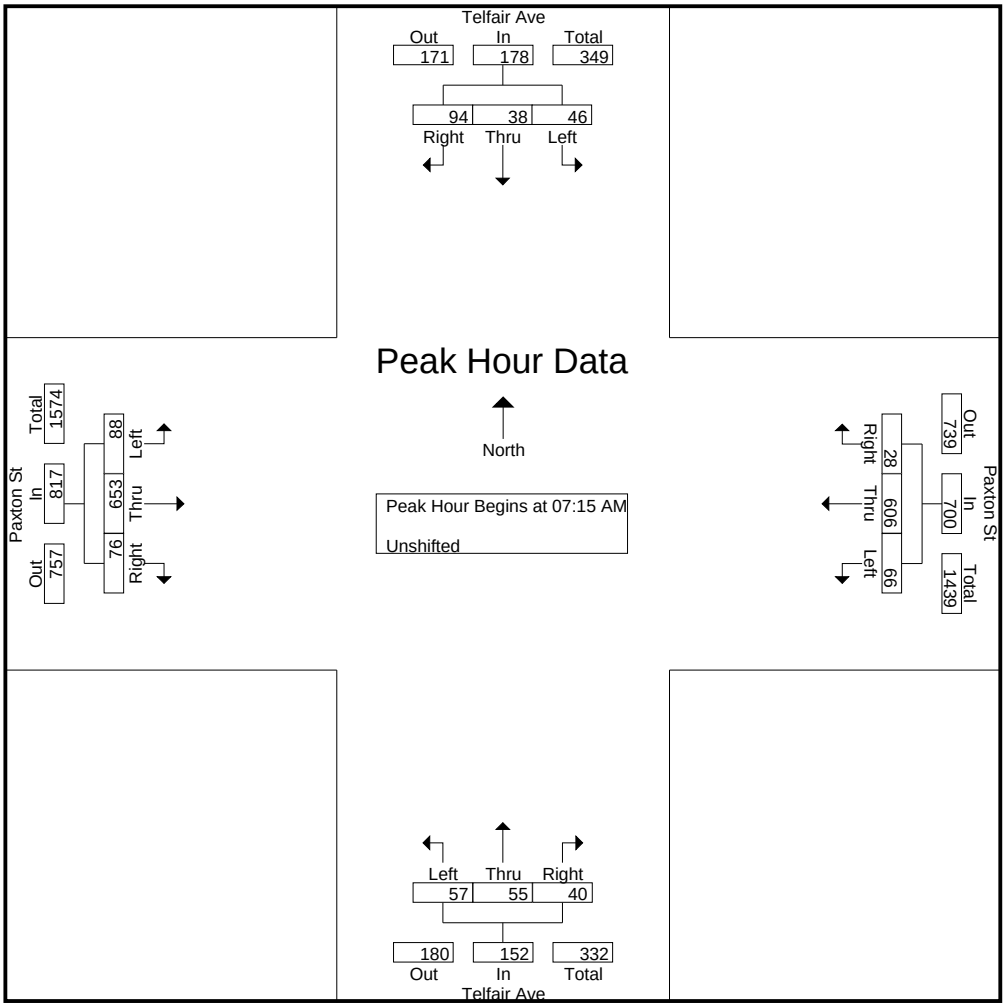

CITY TRAFFIC COUNTERS

626.991.7522

www.ctcounters.com

File Name : Paxton_Telfair
Site Code : 00000000
Start Date : 3/26/2015
Page No : 3

	Telfair Ave Southbound				Paxton St Westbound				Telfair Ave Northbound				Paxton St Eastbound				
Start Time	Left	Thru	Right	App. Total	Left	Thru	Right	App. Total	Left	Thru	Right	App. Total	Left	Thru	Right	App. Total	Int. Total
Peak Hour Analysis From 10:00 AM to 01:45 PM - Peak 1 of 1																	
Peak Hour for Entire Intersection Begins at 12:15 PM																	
12:15 PM	**4**	3	**14**	**21**	6	110	**8**	**124**	3	2	9	14	16	96	7	119	**278**
12:30 PM	4	3	9	16	**7**	**116**	0	123	5	1	5	11	16	97	**8**	121	271
12:45 PM	2	**5**	12	19	6	77	5	88	**10**	3	**11**	**24**	7	**119**	6	**132**	263
01:00 PM	4	2	8	14	5	104	2	111	7	**5**	10	22	**22**	99	1	122	269
Total Volume	14	13	43	70	24	407	15	446	25	11	35	71	61	411	22	494	1081
% App. Total	20	18.6	61.4		5.4	91.3	3.4		35.2	15.5	49.3		12.3	83.2	4.5		
PHF	.875	.650	.768	.833	.857	.877	.469	.899	.625	.550	.795	.740	.693	.863	.688	.936	.972

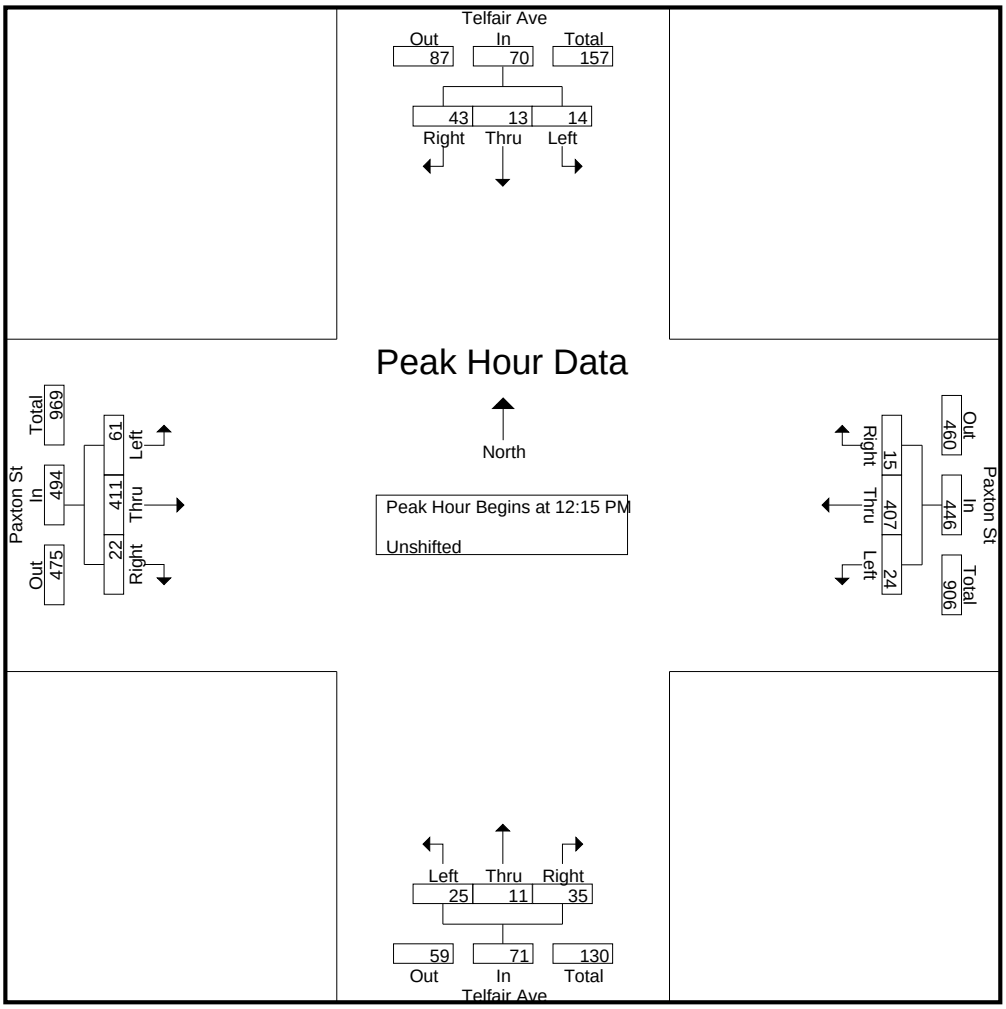

CITY TRAFFIC COUNTERS

626.991.7522

www.ctcounters.com

File Name : Paxton_Telfair
Site Code : 00000000
Start Date : 3/26/2015
Page No : 4

	Telfair Ave Southbound				Paxton St Westbound				Telfair Ave Northbound				Paxton St Eastbound				
Start Time	Left	Thru	Right	App. Total	Left	Thru	Right	App. Total	Left	Thru	Right	App. Total	Left	Thru	Right	App. Total	Int. Total
Peak Hour Analysis From 02:00 PM to 05:45 PM - Peak 1 of 1																	
Peak Hour for Entire Intersection Begins at 05:00 PM																	
05:00 PM	**8**	4	13	25	12	159	8	179	8	14	**13**	35	15	195	9	219	458
05:15 PM	7	4	12	23	**13**	130	7	150	9	**15**	10	34	24	**220**	**13**	**257**	464
05:30 PM	7	**14**	15	**36**	12	151	**13**	176	8	8	7	23	**35**	197	12	244	479
05:45 PM	5	7	**18**	30	10	**164**	7	**181**	**13**	11	13	**37**	25	210	10	245	**493**
Total Volume	27	29	58	114	47	604	35	686	38	48	43	129	99	822	44	965	1894
% App. Total	23.7	25.4	50.9		6.9	88	5.1		29.5	37.2	33.3		10.3	85.2	4.6		
PHF	.844	.518	.806	.792	.904	.921	.673	.948	.731	.800	.827	.872	.707	.934	.846	.939	.960

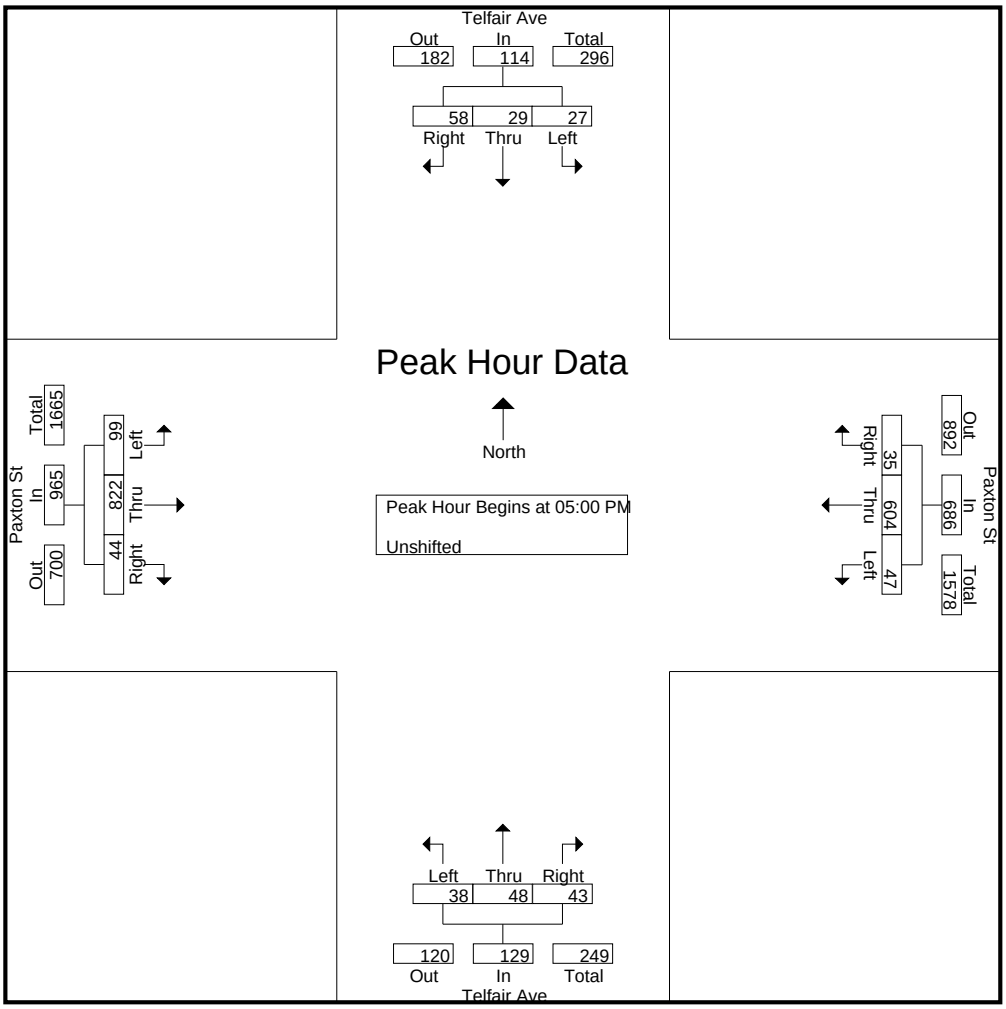

CITY TRAFFIC COUNTERS

626.991.7522

www.ctcounters.com

File Name : Paxton_Telfair_Motorcycles
Site Code : 00000000
Start Date : 3/26/2015
Page No : 1

Groups Printed- Bank 2

	Telfair Ave Southbound			Paxton St Westbound			Telfair Ave Northbound			Paxton St Eastbound			
Start Time	Left	Thru	Right	Left	Thru	Right	Left	Thru	Right	Left	Thru	Right	Int. Total
07:00 AM	0	0	0	0	0	0	0	0	0	0	1	0	1
07:15 AM	0	0	0	0	1	0	0	0	0	0	0	0	1
07:30 AM	0	0	0	0	2	0	0	0	0	0	0	0	2
07:45 AM	0	0	0	0	0	0	0	0	0	0	1	0	1
Total	0	0	0	0	3	0	0	0	0	0	2	0	5
08:00 AM	0	0	0	0	0	0	0	0	0	0	1	0	1
08:30 AM	0	0	0	0	0	0	0	0	0	0	1	0	1
Total	0	0	0	0	0	0	0	0	0	0	2	0	2
09:30 AM	0	0	0	0	1	0	0	0	0	0	0	0	1
09:45 AM	0	0	0	0	1	0	0	0	0	0	0	0	1
Total	0	0	0	0	2	0	0	0	0	0	0	0	2
01:00 PM	0	0	0	0	0	0	0	0	0	0	1	0	1
01:30 PM	0	0	0	0	1	0	0	0	0	0	0	0	1
01:45 PM	0	0	0	0	1	0	0	0	0	0	0	0	1
Total	0	0	0	0	2	0	0	0	0	0	1	0	3
03:15 PM	0	0	0	0	1	0	0	0	0	0	0	0	1
03:30 PM	0	0	0	0	1	0	0	0	0	0	1	0	2
03:45 PM	0	0	0	0	0	0	0	0	0	0	3	0	3
Total	0	0	0	0	2	0	0	0	0	0	4	0	6
04:30 PM	0	0	0	0	4	0	0	0	0	0	0	0	4
04:45 PM	0	0	0	0	2	0	0	0	0	0	0	0	2
Total	0	0	0	0	6	0	0	0	0	0	0	0	6
05:00 PM	0	0	0	0	1	1	0	0	0	0	0	0	2
05:15 PM	0	0	0	0	2	0	1	0	0	0	2	0	5
05:30 PM	0	0	0	0	1	0	0	0	0	1	0	0	2
Total	0	0	0	0	4	1	1	0	0	1	2	0	9
Grand Total	0	0	0	0	19	1	1	0	0	1	11	0	33
Apprch %	0	0	0	0	95	5	100	0	0	8.3	91.7	0	
Total %	0	0	0	0	57.6	3	3	0	0	3	33.3	0	

CITY TRAFFIC COUNTERS

626.991.7522

www.ctcounters.com

File Name : Paxton_Telfair_Motorcycles
Site Code : 00000000
Start Date : 3/26/2015
Page No : 2

	Telfair Ave Southbound				Paxton St Westbound				Telfair Ave Northbound				Paxton St Eastbound				
Start Time	Left	Thru	Right	App. Total	Left	Thru	Right	App. Total	Left	Thru	Right	App. Total	Left	Thru	Right	App. Total	Int. Total
Peak Hour Analysis From 07:00 AM to 09:45 AM - Peak 1 of 1																	
Peak Hour for Entire Intersection Begins at 07:00 AM																	
07:00 AM	0	0	0	0	0	0	0	0	0	0	0	0	0	**1**	0	**1**	1
07:15 AM	0	0	0	0	0	1	0	1	0	0	0	0	0	0	0	0	1
07:30 AM	0	0	0	0	0	**2**	0	**2**	0	0	0	0	0	0	0	0	**2**
07:45 AM	0	0	0	0	0	0	0	0	0	0	0	0	0	1	0	1	1
Total Volume	0	0	0	0	0	3	0	3	0	0	0	0	0	2	0	2	5
% App. Total	0	0	0		0	100	0		0	0	0		0	100	0		
PHF	.000	.000	.000	.000	.000	.375	.000	.375	.000	.000	.000	.000	.000	.500	.000	.500	.625

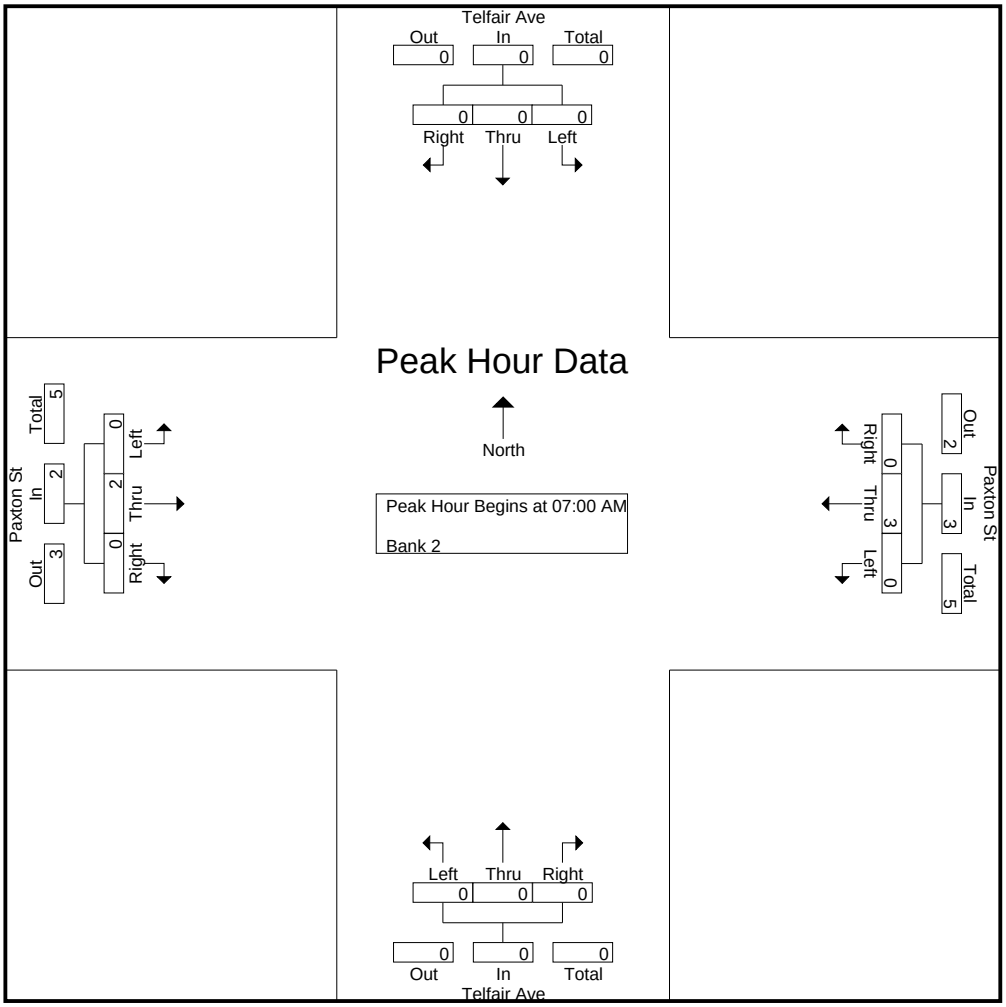

CITY TRAFFIC COUNTERS

626.991.7522

www.ctcounters.com

File Name : Paxton_Telfair_Motorcycles
Site Code : 00000000
Start Date : 3/26/2015
Page No : 3

	Telfair Ave Southbound				Paxton St Westbound				Telfair Ave Northbound				Paxton St Eastbound				
Start Time	Left	Thru	Right	App. Total	Left	Thru	Right	App. Total	Left	Thru	Right	App. Total	Left	Thru	Right	App. Total	Int. Total
Peak Hour Analysis From 10:00 AM to 01:45 PM - Peak 1 of 1																	
Peak Hour for Entire Intersection Begins at 01:00 PM																	
01:00 PM	0	0	0	0	0	0	0	0	0	0	0	0	0	**1**	0	**1**	**1**
01:15 PM	0	0	0	0	0	0	0	0	0	0	0	0	0	0	0	0	0
01:30 PM	0	0	0	0	0	**1**	0	**1**	0	0	0	0	0	0	0	0	1
01:45 PM	0	0	0	0	0	1	0	1	0	0	0	0	0	0	0	0	1
Total Volume	0	0	0	0	0	2	0	2	0	0	0	0	0	1	0	1	3
% App. Total	0	0	0		0	100	0		0	0	0		0	100	0		
PHF	.000	.000	.000	.000	.000	.500	.000	.500	.000	.000	.000	.000	.000	.250	.000	.250	.750

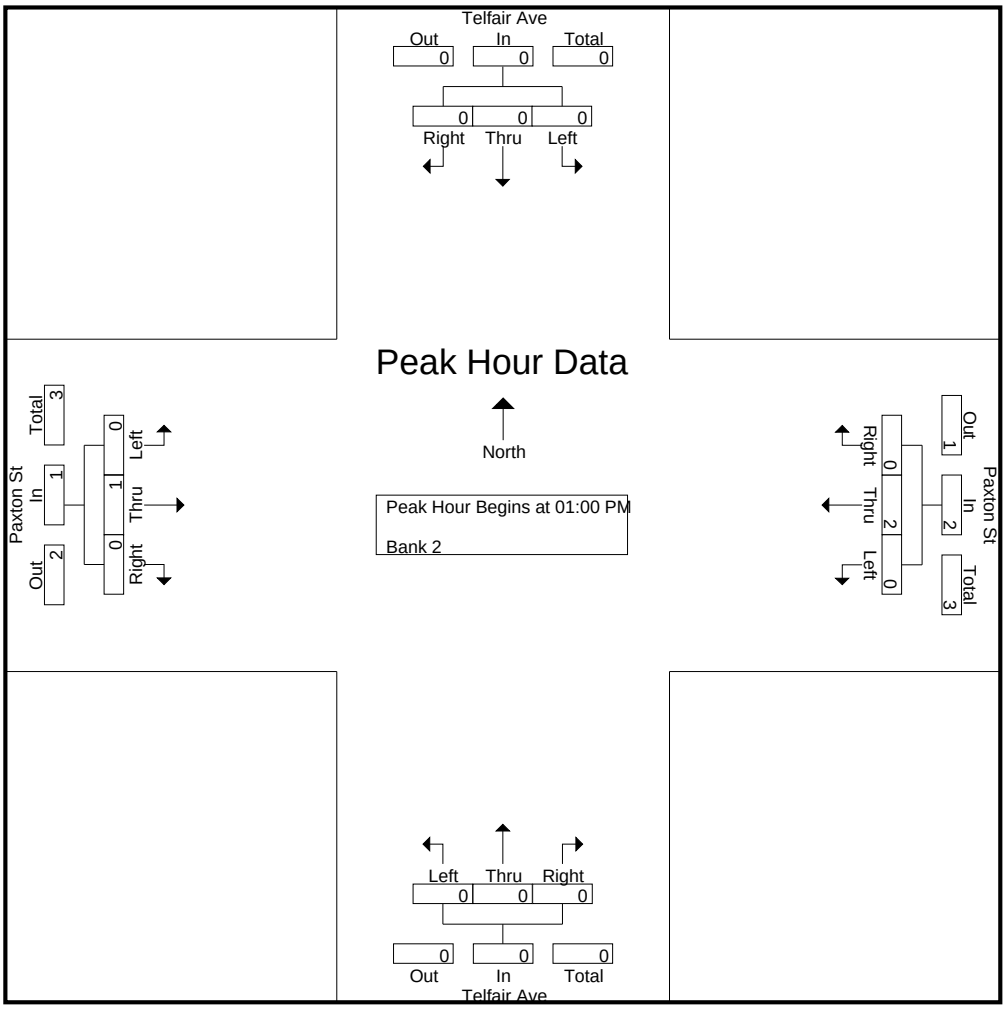

CITY TRAFFIC COUNTERS

626.991.7522

www.ctcounters.com

File Name : Paxton_Telfair_Motorcycles
Site Code : 00000000
Start Date : 3/26/2015
Page No : 4

	Telfair Ave Southbound				Paxton St Westbound				Telfair Ave Northbound				Paxton St Eastbound				
Start Time	Left	Thru	Right	App. Total	Left	Thru	Right	App. Total	Left	Thru	Right	App. Total	Left	Thru	Right	App. Total	Int. Total
Peak Hour Analysis From 02:00 PM to 05:45 PM - Peak 1 of 1																	
Peak Hour for Entire Intersection Begins at 04:30 PM																	
04:30 PM	0	0	0	0	0	**4**	0	**4**	0	0	0	0	0	0	0	0	4
04:45 PM	0	0	0	0	0	2	0	2	0	0	0	0	0	0	0	0	2
05:00 PM	0	0	0	0	0	1	**1**	2	0	0	0	0	0	0	0	0	2
05:15 PM	0	0	0	0	0	2	0	2	**1**	0	0	**1**	0	**2**	0	**2**	**5**
Total Volume	0	0	0	0	0	9	1	10	1	0	0	1	0	2	0	2	13
% App. Total	0	0	0		0	90	10		100	0	0		0	100	0		
PHF	.000	.000	.000	.000	.000	.563	.250	.625	.250	.000	.000	.250	.000	.250	.000	.250	.650

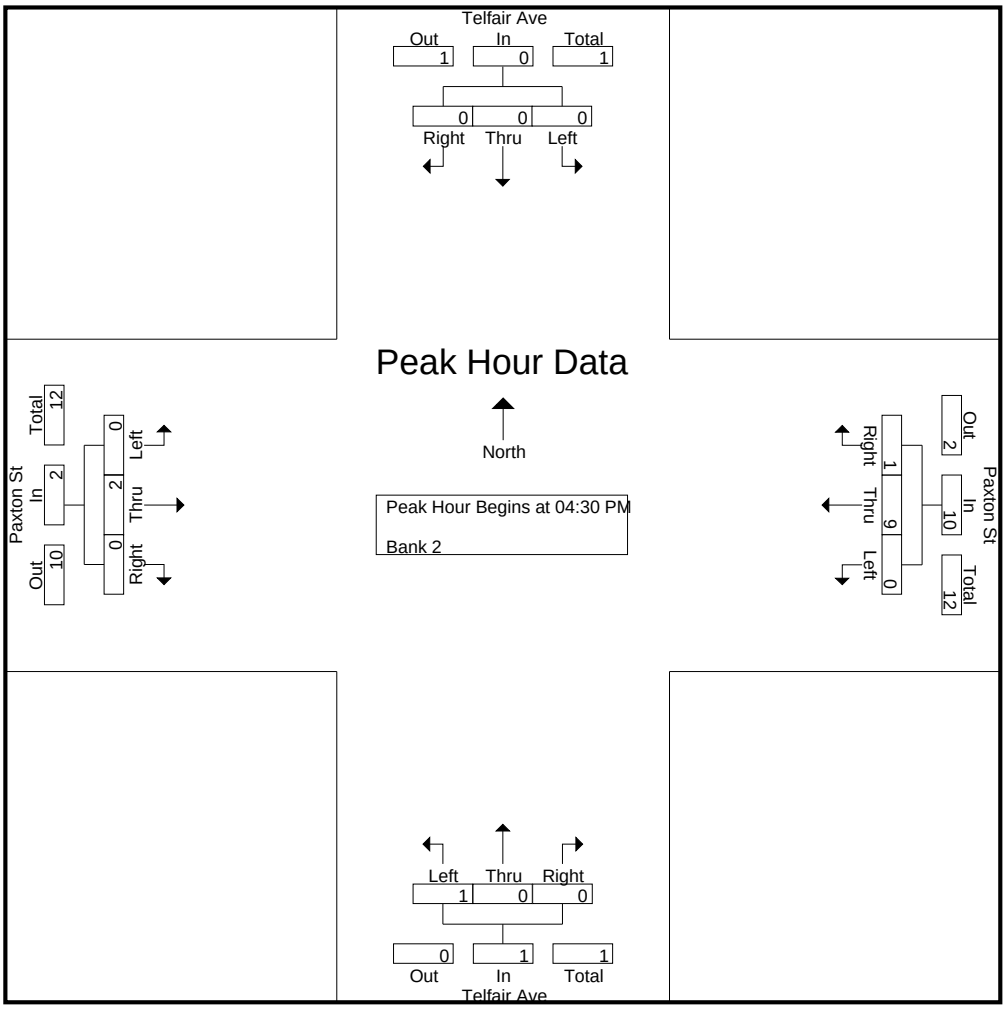

CITY TRAFFIC COUNTERS

626.991.7522

www.ctcounters.com

File Name : Paxton_Telfair_Buses
Site Code : 00000000
Start Date : 3/26/2015
Page No : 1

Groups Printed- Bank 1

	Telfair Ave Southbound			Paxton St Westbound			Telfair Ave Northbound			Paxton St Eastbound			
Start Time	Left	Thru	Right	Left	Thru	Right	Left	Thru	Right	Left	Thru	Right	Int. Total
07:00 AM	0	0	0	0	3	0	0	0	0	0	2	0	5
07:30 AM	0	0	0	0	1	0	0	0	0	0	0	0	1
07:45 AM	0	0	0	0	1	0	0	0	0	0	1	0	2
Total	0	0	0	0	5	0	0	0	0	0	3	0	8
08:00 AM	0	0	0	0	0	0	0	0	0	0	1	0	1
08:15 AM	0	0	0	0	0	0	0	0	0	0	5	0	5
08:30 AM	0	0	0	0	0	0	0	0	0	0	5	0	5
08:45 AM	0	0	0	0	1	0	0	0	0	0	1	0	2
Total	0	0	0	0	1	0	0	0	0	0	12	0	13
09:00 AM	0	0	0	0	0	0	0	0	0	0	5	0	5
09:15 AM	0	0	0	0	0	0	0	0	0	0	2	0	2
09:30 AM	0	0	0	0	0	0	0	0	0	0	3	0	3
09:45 AM	0	0	0	0	0	0	0	0	0	0	1	0	1
Total	0	0	0	0	0	0	0	0	0	0	11	0	11
12:00 PM	0	0	0	0	1	0	0	0	0	0	1	0	2
12:15 PM	0	0	0	0	0	0	0	0	0	0	1	0	1
12:30 PM	0	0	0	0	0	0	0	0	0	0	1	0	1
12:45 PM	0	0	0	0	2	0	0	0	0	0	0	0	2
Total	0	0	0	0	3	0	0	0	0	0	3	0	6
01:15 PM	0	0	0	0	3	0	0	0	0	0	0	0	3
01:30 PM	0	0	0	0	4	0	0	0	0	0	1	0	5
01:45 PM	0	0	0	0	2	0	0	0	0	0	0	0	2
Total	0	0	0	0	9	0	0	0	0	0	1	0	10
03:00 PM	0	0	0	0	1	0	0	0	0	0	1	0	2
03:15 PM	0	0	0	0	1	0	0	0	0	0	8	0	9
03:30 PM	0	0	0	0	1	0	0	0	0	0	3	0	4
03:45 PM	0	0	0	0	1	0	0	0	0	0	4	0	5
Total	0	0	0	0	4	0	0	0	0	0	16	0	20
04:00 PM	0	0	0	0	1	0	0	0	0	0	4	0	5
04:15 PM	0	0	0	0	0	0	0	0	0	0	4	0	4
04:30 PM	0	0	0	0	0	0	0	0	0	0	2	0	2
04:45 PM	0	0	0	0	1	0	0	0	0	0	3	0	4
Total	0	0	0	0	2	0	0	0	0	0	13	0	15
05:00 PM	0	0	0	0	0	0	0	0	0	0	4	0	4
05:15 PM	0	0	0	0	0	0	0	0	0	0	6	0	6
05:30 PM	0	0	0	0	0	0	0	0	0	0	4	0	4
05:45 PM	0	0	0	0	1	0	0	0	0	0	2	0	3
Total	0	0	0	0	1	0	0	0	0	0	16	0	17
Grand Total	0	0	0	0	25	0	0	0	0	0	75	0	100
Apprch %	0	0	0	0	100	0	0	0	0	0	100	0	
Total %	0	0	0	0	25	0	0	0	0	0	75	0	

CITY TRAFFIC COUNTERS

626.991.7522

www.ctcounters.com

File Name : Paxton_Telfair_Buses
Site Code : 00000000
Start Date : 3/26/2015
Page No : 2

	Telfair Ave Southbound				Paxton St Westbound				Telfair Ave Northbound				Paxton St Eastbound				
Start Time	Left	Thru	Right	App. Total	Left	Thru	Right	App. Total	Left	Thru	Right	App. Total	Left	Thru	Right	App. Total	Int. Total
Peak Hour Analysis From 07:00 AM to 09:45 AM - Peak 1 of 1																	
Peak Hour for Entire Intersection Begins at 08:15 AM																	
08:15 AM	0	0	0	0	0	0	0	0	0	0	0	0	0	**5**	0	**5**	**5**
08:30 AM	0	0	0	0	0	0	0	0	0	0	0	0	0	5	0	5	5
08:45 AM	0	0	0	0	0	**1**	0	**1**	0	0	0	0	0	1	0	1	2
09:00 AM	0	0	0	0	0	0	0	0	0	0	0	0	0	5	0	5	5
Total Volume	0	0	0	0	0	1	0	1	0	0	0	0	0	16	0	16	17
% App. Total	0	0	0		0	100	0		0	0	0		0	100	0		
PHF	.000	.000	.000	.000	.000	.250	.000	.250	.000	.000	.000	.000	.000	.800	.000	.800	.850

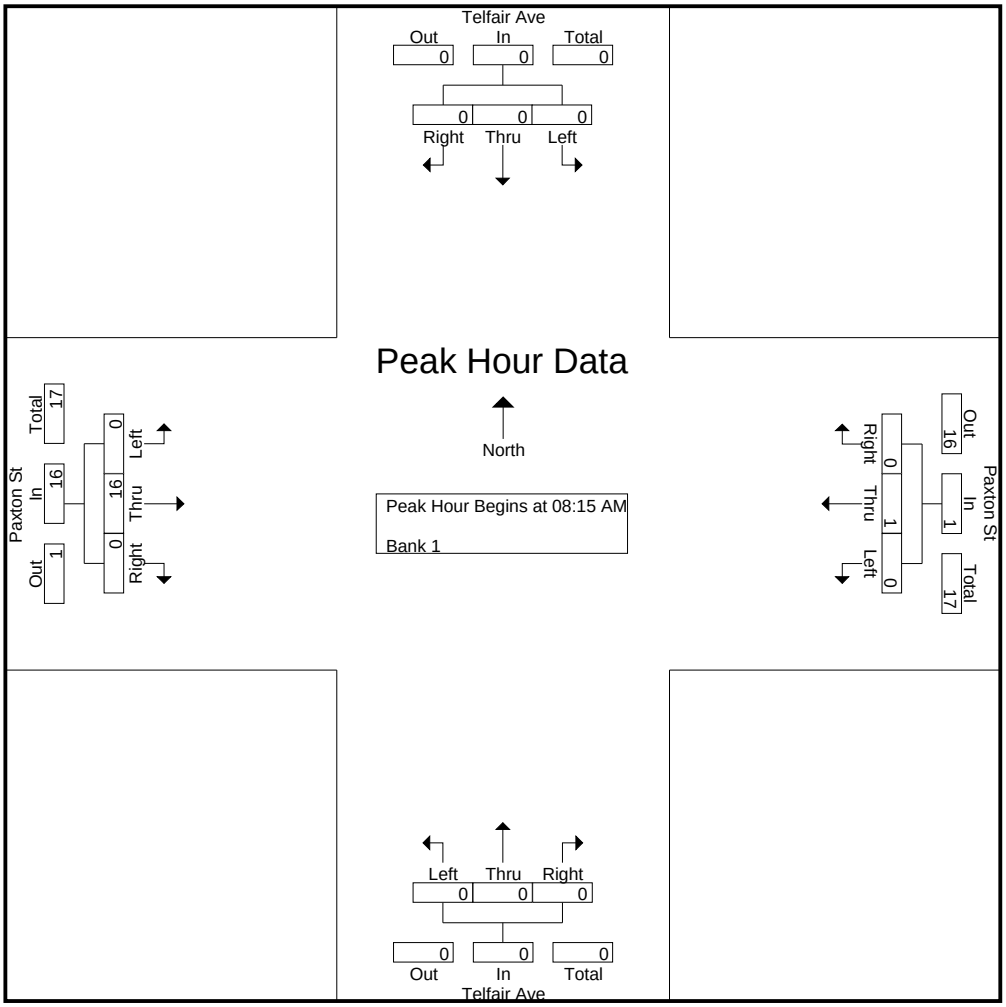

CITY TRAFFIC COUNTERS

626.991.7522

www.ctcounters.com

File Name : Paxton_Telfair_Buses
Site Code : 00000000
Start Date : 3/26/2015
Page No : 3

	Telfair Ave Southbound				Paxton St Westbound				Telfair Ave Northbound				Paxton St Eastbound				
Start Time	Left	Thru	Right	App. Total	Left	Thru	Right	App. Total	Left	Thru	Right	App. Total	Left	Thru	Right	App. Total	Int. Total
Peak Hour Analysis From 10:00 AM to 01:45 PM - Peak 1 of 1																	
Peak Hour for Entire Intersection Begins at 12:45 PM																	
12:45 PM	0	0	0	0	0	2	0	2	0	0	0	0	0	0	0	0	2
01:00 PM	0	0	0	0	0	0	0	0	0	0	0	0	0	0	0	0	0
01:15 PM	0	0	0	0	0	3	0	3	0	0	0	0	0	0	0	0	3
01:30 PM	0	0	0	0	0	**4**	0	**4**	0	0	0	0	0	**1**	0	**1**	**5**
Total Volume	0	0	0	0	0	9	0	9	0	0	0	0	0	1	0	1	10
% App. Total	0	0	0		0	100	0		0	0	0		0	100	0		
PHF	.000	.000	.000	.000	.000	.563	.000	.563	.000	.000	.000	.000	.000	.250	.000	.250	.500

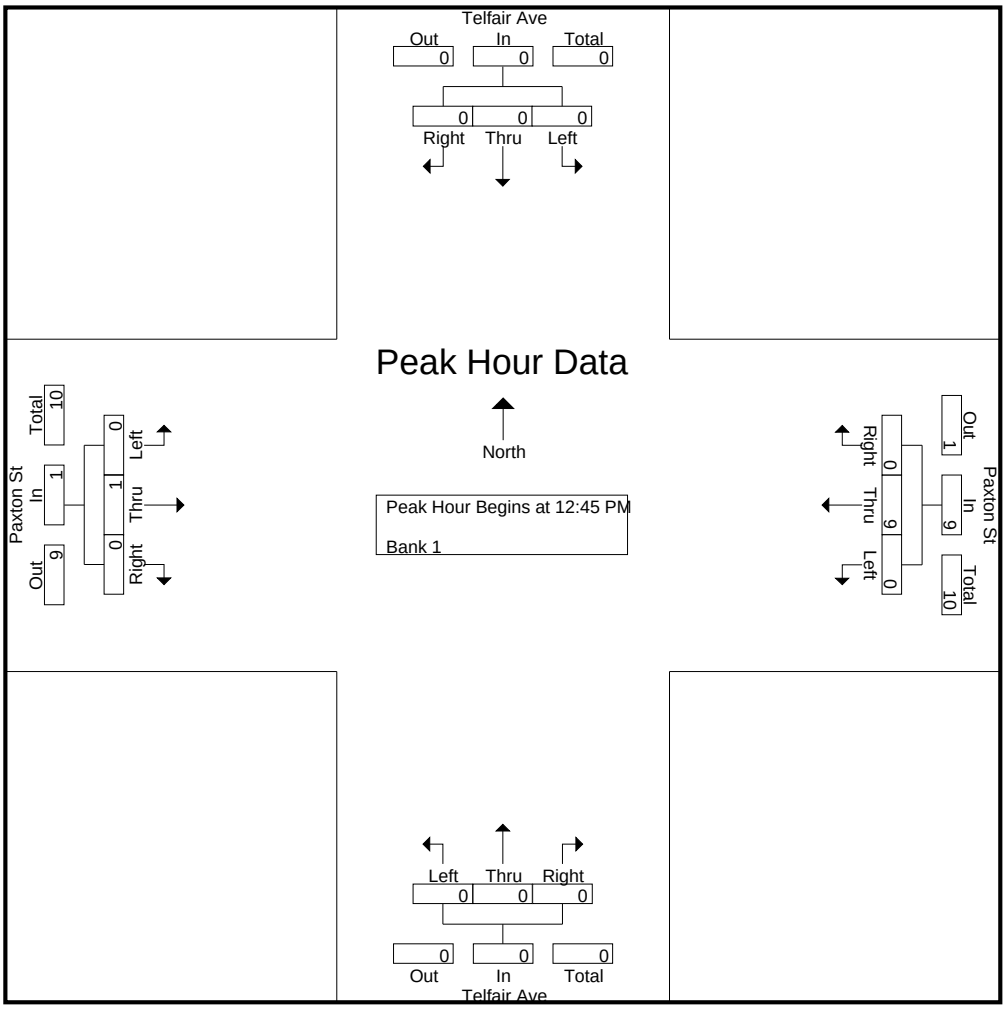

CITY TRAFFIC COUNTERS

626.991.7522

www.ctcounters.com

File Name : Paxton_Telfair_Buses
Site Code : 00000000
Start Date : 3/26/2015
Page No : 4

	Telfair Ave Southbound				Paxton St Westbound				Telfair Ave Northbound				Paxton St Eastbound				
Start Time	Left	Thru	Right	App. Total	Left	Thru	Right	App. Total	Left	Thru	Right	App. Total	Left	Thru	Right	App. Total	Int. Total
Peak Hour Analysis From 02:00 PM to 05:45 PM - Peak 1 of 1																	
Peak Hour for Entire Intersection Begins at 03:15 PM																	
03:15 PM	0	0	0	0	0	**1**	0	**1**	0	0	0	0	0	**8**	0	**8**	**9**
03:30 PM	0	0	0	0	0	1	0	1	0	0	0	0	0	3	0	3	4
03:45 PM	0	0	0	0	0	1	0	1	0	0	0	0	0	4	0	4	5
04:00 PM	0	0	0	0	0	1	0	1	0	0	0	0	0	4	0	4	5
Total Volume	0	0	0	0	0	4	0	4	0	0	0	0	0	19	0	19	23
% App. Total	0	0	0		0	100	0		0	0	0		0	100	0		
PHF	.000	.000	.000	.000	.000	1.00	.000	1.00	.000	.000	.000	.000	.000	.594	.000	.594	.639

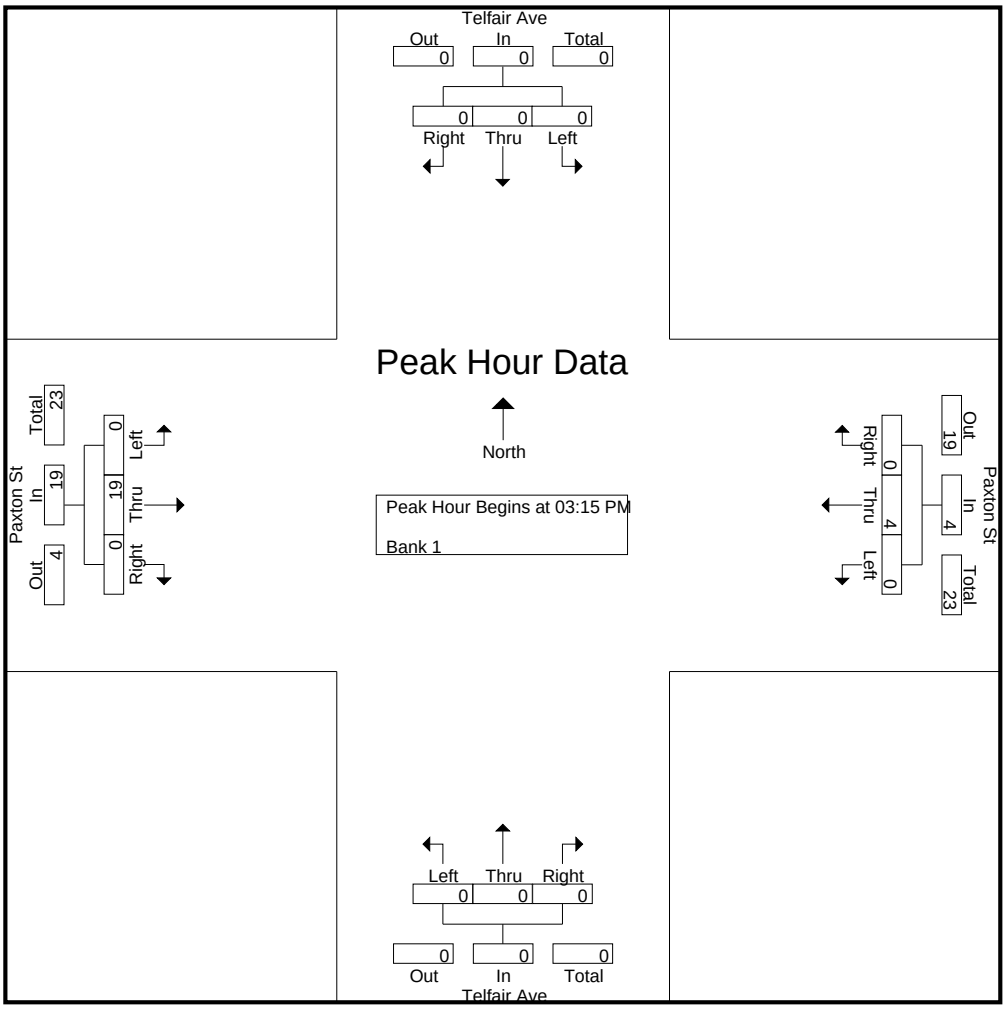

CITY TRAFFIC COUNTERS

626.991.7522

www.ctcounters.com

File Name : paxton_telfair_2axle
Site Code : 00000000
Start Date : 3/26/2015
Page No : 1

Groups Printed- Unshifted

	Telfair Ave Southbound			Paxton St Westbound			Telfair Ave Northbound			Paxton St Eastbound			
Start Time	Left	Thru	Right	Left	Thru	Right	Left	Thru	Right	Left	Thru	Right	Int. Total
07:00 AM	0	0	0	2	9	1	0	0	1	2	5	0	20
07:15 AM	0	0	1	1	5	0	0	0	0	0	3	1	11
07:30 AM	0	0	0	2	3	0	0	0	0	0	7	0	12
07:45 AM	0	0	0	0	3	0	0	0	0	0	4	0	7
Total	0	0	1	5	20	1	0	0	1	2	19	1	50
08:00 AM	0	0	0	1	5	0	0	0	0	0	5	0	11
08:15 AM	0	0	1	1	6	1	0	0	0	2	6	2	19
08:30 AM	1	0	0	0	4	1	0	0	0	2	5	1	14
08:45 AM	0	0	0	0	4	0	0	1	1	1	6	1	14
Total	1	0	1	2	19	2	0	1	1	5	22	4	58
09:00 AM	0	0	0	0	6	0	0	0	1	0	8	1	16
09:15 AM	0	0	1	0	5	0	0	0	0	0	6	0	12
09:30 AM	0	0	0	1	4	0	0	0	2	0	2	0	9
09:45 AM	0	0	0	1	3	0	0	0	0	0	1	0	5
Total	0	0	1	2	18	0	0	0	3	0	17	1	42
12:00 PM	0	1	0	2	6	0	0	0	0	0	6	0	15
12:15 PM	0	0	0	4	2	0	0	0	0	0	4	0	10
12:30 PM	0	0	0	0	4	0	0	0	0	0	2	0	6
12:45 PM	0	0	0	0	5	0	0	0	0	0	2	0	7
Total	0	1	0	6	17	0	0	0	0	0	14	0	38
01:00 PM	0	0	0	0	2	0	0	0	0	0	3	0	5
01:15 PM	0	0	1	1	2	1	0	0	0	2	1	0	8
01:30 PM	0	0	1	0	9	1	0	0	1	0	6	0	18
01:45 PM	1	0	1	0	6	0	0	1	0	1	5	0	15
Total	1	0	3	1	19	2	0	1	1	3	15	0	46
03:00 PM	0	0	1	0	6	0	0	0	0	1	6	1	15
03:15 PM	0	0	1	0	2	0	0	0	0	1	10	1	15
03:30 PM	1	0	0	0	2	1	0	0	0	2	3	0	9
03:45 PM	0	0	0	0	5	1	0	0	0	1	3	0	10
Total	1	0	2	0	15	2	0	0	0	5	22	2	49
04:00 PM	0	0	0	1	3	0	0	0	1	0	4	0	9
04:15 PM	0	0	1	1	5	0	0	0	1	0	3	0	11
04:30 PM	0	0	0	0	1	0	0	0	0	0	8	0	9
04:45 PM	0	0	0	0	2	1	0	0	0	1	4	0	8
Total	0	0	1	2	11	1	0	0	2	1	19	0	37
05:00 PM	0	0	1	0	1	1	0	0	0	1	3	0	7
05:15 PM	0	0	0	1	1	0	0	0	0	1	2	0	5
05:30 PM	0	0	0	0	0	0	0	0	0	0	7	0	7
05:45 PM	0	0	0	0	2	0	0	0	0	0	1	0	3
Total	0	0	1	1	4	1	0	0	0	2	13	0	22
Grand Total	3	1	10	19	123	9	0	2	8	18	141	8	342
Apprch %	21.4	7.1	71.4	12.6	81.5	6	0	20	80	10.8	84.4	4.8	
Total %	0.9	0.3	2.9	5.6	36	2.6	0	0.6	2.3	5.3	41.2	2.3	

CITY TRAFFIC COUNTERS

626.991.7522

www.ctcounters.com

File Name : paxton_telfair_2axle
Site Code : 00000000
Start Date : 3/26/2015
Page No : 2

	Telfair Ave Southbound				Paxton St Westbound				Telfair Ave Northbound				Paxton St Eastbound				
Start Time	Left	Thru	Right	App. Total	Left	Thru	Right	App. Total	Left	Thru	Right	App. Total	Left	Thru	Right	App. Total	Int. Total
Peak Hour Analysis From 07:00 AM to 09:45 AM - Peak 1 of 1																	
Peak Hour for Entire Intersection Begins at 08:15 AM																	
08:15 AM	0	0	**1**	**1**	**1**	**6**	**1**	**8**	0	0	0	0	**2**	6	**2**	**10**	**19**
08:30 AM	**1**	0	0	1	0	4	1	5	0	0	0	0	2	5	1	8	14
08:45 AM	0	0	0	0	0	4	0	4	0	**1**	**1**	**2**	1	6	1	8	14
09:00 AM	0	0	0	0	0	6	0	6	0	0	1	1	0	**8**	1	9	16
Total Volume	1	0	1	2	1	20	2	23	0	1	2	3	5	25	5	35	63
% App. Total	50	0	50		4.3	87	8.7		0	33.3	66.7		14.3	71.4	14.3		
PHF	.250	.000	.250	.500	.250	.833	.500	.719	.000	.250	.500	.375	.625	.781	.625	.875	.829

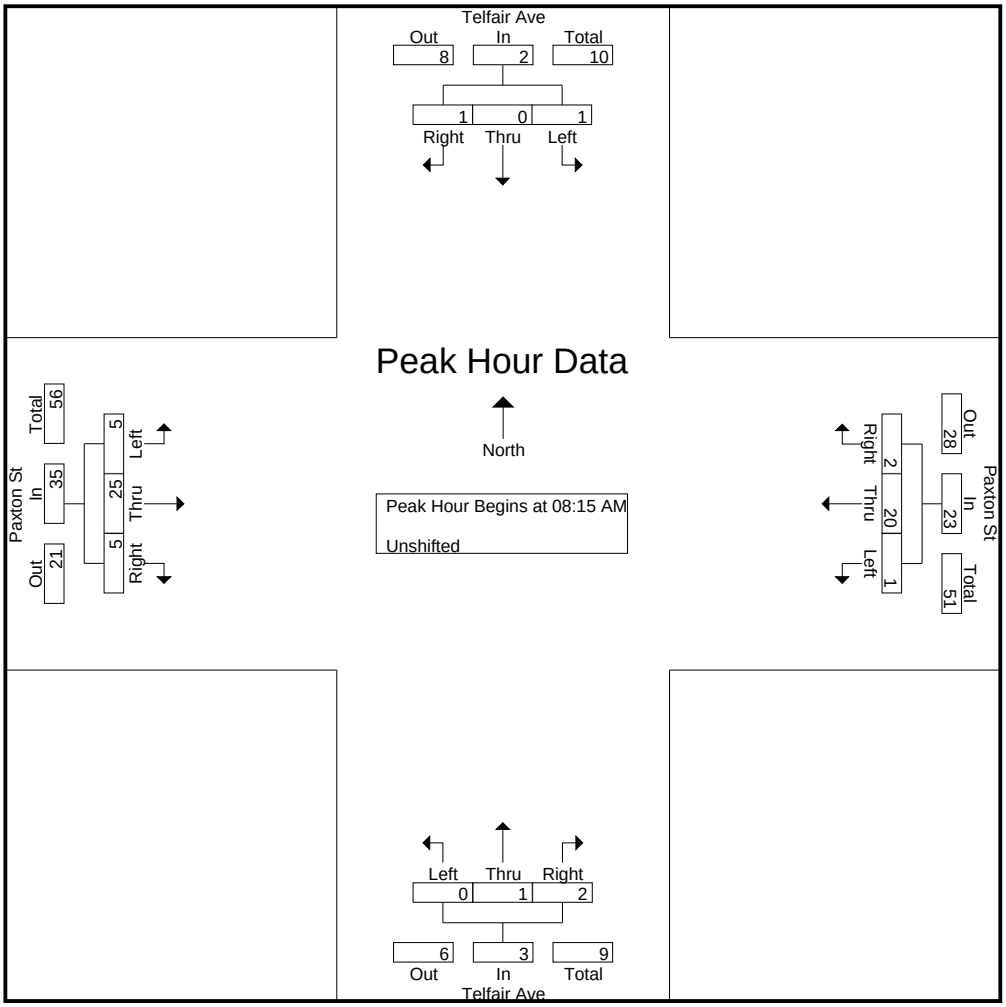

CITY TRAFFIC COUNTERS

626.991.7522

www.ctcounters.com

File Name : paxton_telfair_2axle
Site Code : 00000000
Start Date : 3/26/2015
Page No : 3

	Telfair Ave Southbound				Paxton St Westbound				Telfair Ave Northbound				Paxton St Eastbound				
Start Time	Left	Thru	Right	App. Total	Left	Thru	Right	App. Total	Left	Thru	Right	App. Total	Left	Thru	Right	App. Total	Int. Total
Peak Hour Analysis From 10:00 AM to 01:45 PM - Peak 1 of 1																	
Peak Hour for Entire Intersection Begins at 01:00 PM																	
01:00 PM	0	0	0	0	0	2	0	2	0	0	0	0	0	3	0	3	5
01:15 PM	0	0	**1**	1	**1**	2	**1**	4	0	0	0	0	**2**	1	0	3	8
01:30 PM	0	0	1	1	0	**9**	1	**10**	0	0	**1**	**1**	0	**6**	0	**6**	**18**
01:45 PM	**1**	0	1	**2**	0	6	0	6	0	**1**	0	1	1	5	0	6	15
Total Volume	1	0	3	4	1	19	2	22	0	1	1	2	3	15	0	18	46
% App. Total	25	0	75		4.5	86.4	9.1		0	50	50		16.7	83.3	0		
PHF	.250	.000	.750	.500	.250	.528	.500	.550	.000	.250	.250	.500	.375	.625	.000	.750	.639

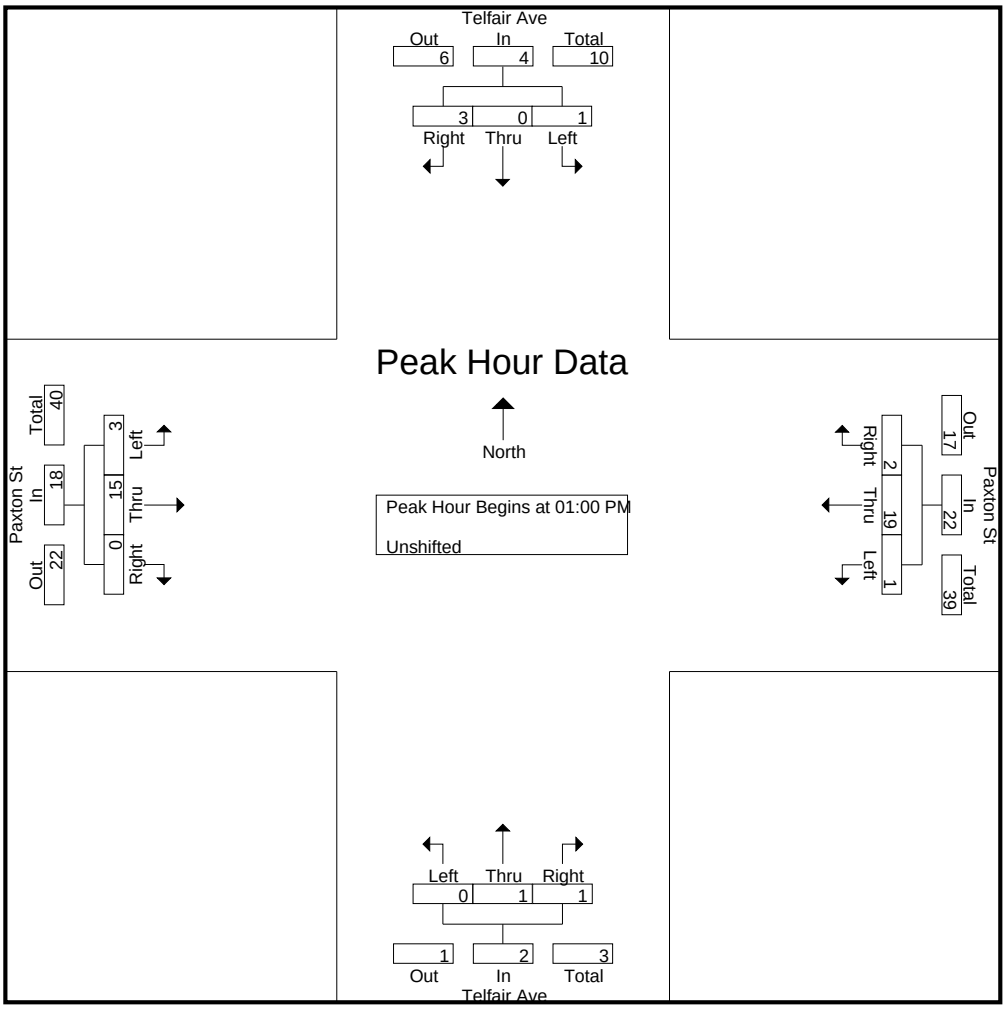

CITY TRAFFIC COUNTERS

626.991.7522

www.ctcounters.com

File Name : paxton_telfair_2axle
Site Code : 00000000
Start Date : 3/26/2015
Page No : 4

	Telfair Ave Southbound				Paxton St Westbound				Telfair Ave Northbound				Paxton St Eastbound				
Start Time	Left	Thru	Right	App. Total	Left	Thru	Right	App. Total	Left	Thru	Right	App. Total	Left	Thru	Right	App. Total	Int. Total
Peak Hour Analysis From 02:00 PM to 05:45 PM - Peak 1 of 1																	
Peak Hour for Entire Intersection Begins at 03:00 PM																	
03:00 PM	0	0	**1**	**1**	0	**6**	0	**6**	0	0	0	0	1	6	**1**	8	**15**
03:15 PM	0	0	1	1	0	2	0	2	0	0	0	0	1	**10**	1	**12**	15
03:30 PM	**1**	0	0	1	0	2	**1**	3	0	0	0	0	**2**	3	0	5	9
03:45 PM	0	0	0	0	0	5	1	6	0	0	0	0	1	3	0	4	10
Total Volume	1	0	2	3	0	15	2	17	0	0	0	0	5	22	2	29	49
% App. Total	33.3	0	66.7		0	88.2	11.8		0	0	0		17.2	75.9	6.9		
PHF	.250	.000	.500	.750	.000	.625	.500	.708	.000	.000	.000	.000	.625	.550	.500	.604	.817

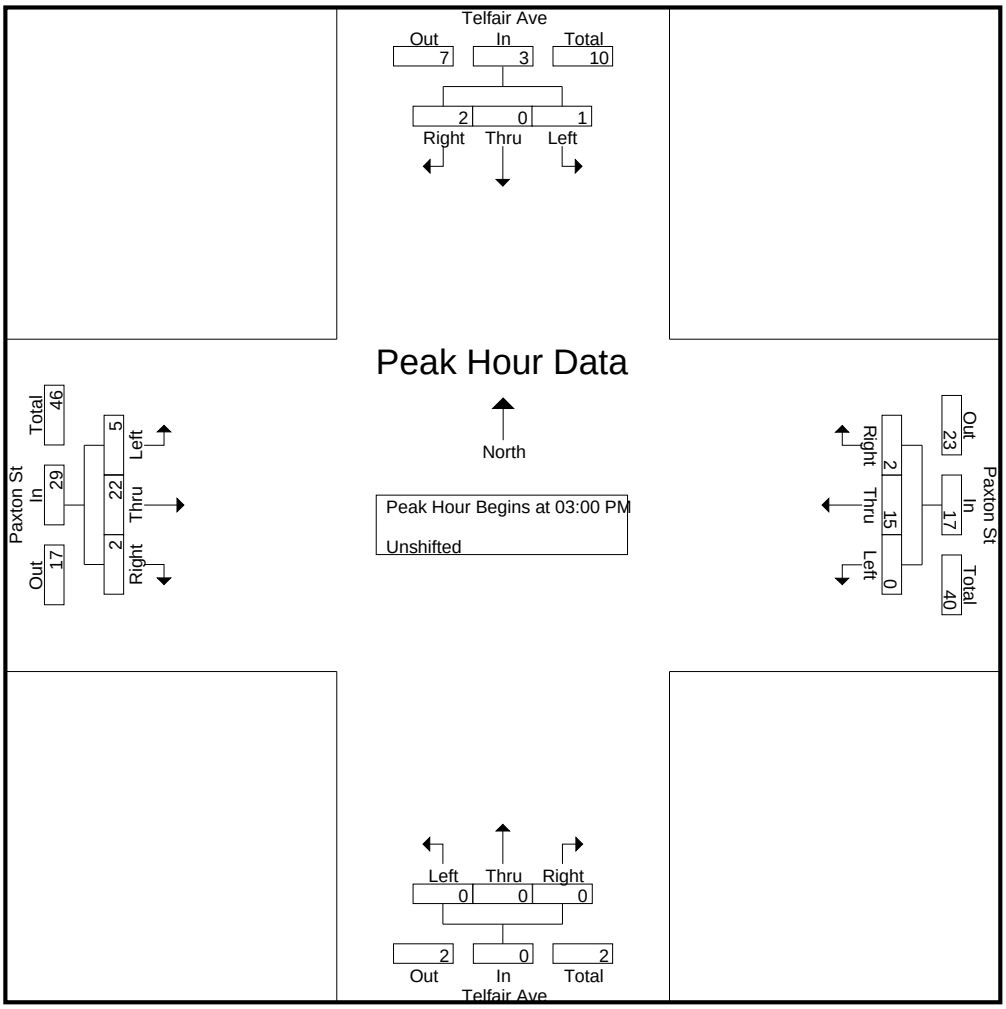

CITY TRAFFIC COUNTERS

626.991.7522

www.ctcounters.com

File Name : Paxton_Telfair_3axle
Site Code : 00000000
Start Date : 3/26/2015
Page No : 1

Groups Printed- Bank 1

	Telfair Ave Southbound			Paxton St Westbound			Telfair Ave Northbound			Paxton St Eastbound			
Start Time	Left	Thru	Right	Left	Thru	Right	Left	Thru	Right	Left	Thru	Right	Int. Total
07:00 AM	1	0	0	0	0	0	0	0	0	0	0	0	1
07:15 AM	0	0	1	0	2	0	0	0	0	0	0	0	3
07:30 AM	0	0	0	0	0	0	0	0	0	0	1	0	1
Total	1	0	1	0	2	0	0	0	0	0	1	0	5
08:00 AM	0	0	0	0	0	0	0	0	0	0	1	0	1
08:30 AM	0	0	0	0	0	0	0	0	0	0	1	0	1
08:45 AM	0	0	0	0	1	0	0	0	0	0	1	0	2
Total	0	0	0	0	1	0	0	0	0	0	3	0	4
09:00 AM	0	0	0	0	0	0	0	0	0	0	1	0	1
09:30 AM	0	0	0	0	0	0	0	0	0	0	2	0	2
09:45 AM	0	0	0	0	2	0	0	0	0	0	2	0	4
Total	0	0	0	0	2	0	0	0	0	0	5	0	7
12:00 PM	0	0	0	0	1	0	0	0	0	0	2	0	3
12:45 PM	0	0	0	0	1	0	0	0	0	0	0	0	1
Total	0	0	0	0	2	0	0	0	0	0	2	0	4
01:00 PM	0	0	0	0	1	2	0	0	0	0	0	0	3
01:15 PM	0	0	0	0	0	0	0	0	0	0	3	0	3
01:45 PM	0	0	0	0	0	0	0	0	0	0	2	0	2
Total	0	0	0	0	1	2	0	0	0	0	5	0	8
03:00 PM	0	0	0	0	0	0	0	0	0	1	0	0	1
03:15 PM	0	0	0	0	2	0	0	0	0	0	1	0	3
03:30 PM	0	0	0	0	1	0	0	0	0	0	0	0	1
Total	0	0	0	0	3	0	0	0	0	1	1	0	5
04:00 PM	0	0	1	0	0	0	0	0	0	0	4	0	5
04:15 PM	0	0	0	2	2	0	0	0	0	0	2	0	6
04:45 PM	0	0	0	0	0	0	0	0	0	0	1	0	1
Total	0	0	1	2	2	0	0	0	0	0	7	0	12
05:00 PM	0	0	0	0	0	0	0	0	0	2	0	0	2
05:30 PM	0	0	0	0	1	0	0	0	0	1	1	0	3
Total	0	0	0	0	1	0	0	0	0	3	1	0	5
Grand Total	1	0	2	2	14	2	0	0	0	4	25	0	50
Apprch %	33.3	0	66.7	11.1	77.8	11.1	0	0	0	13.8	86.2	0	
Total %	2	0	4	4	28	4	0	0	0	8	50	0	

CITY TRAFFIC COUNTERS

626.991.7522

www.ctcounters.com

File Name : Paxton_Telfair_3axle
Site Code : 00000000
Start Date : 3/26/2015
Page No : 2

	Telfair Ave Southbound				Paxton St Westbound				Telfair Ave Northbound				Paxton St Eastbound				
Start Time	Left	Thru	Right	App. Total	Left	Thru	Right	App. Total	Left	Thru	Right	App. Total	Left	Thru	Right	App. Total	Int. Total
Peak Hour Analysis From 07:00 AM to 09:45 AM - Peak 1 of 1																	
Peak Hour for Entire Intersection Begins at 09:00 AM																	
09:00 AM	0	0	0	0	0	0	0	0	0	0	0	0	0	1	0	1	1
09:15 AM	0	0	0	0	0	0	0	0	0	0	0	0	0	0	0	0	0
09:30 AM	0	0	0	0	0	0	0	0	0	0	0	0	0	**2**	0	**2**	2
09:45 AM	0	0	0	0	0	**2**	0	**2**	0	0	0	0	0	2	0	2	**4**
Total Volume	0	0	0	0	0	2	0	2	0	0	0	0	0	5	0	5	7
% App. Total	0	0	0		0	100	0		0	0	0		0	100	0		
PHF	.000	.000	.000	.000	.000	.250	.000	.250	.000	.000	.000	.000	.000	.625	.000	.625	.438

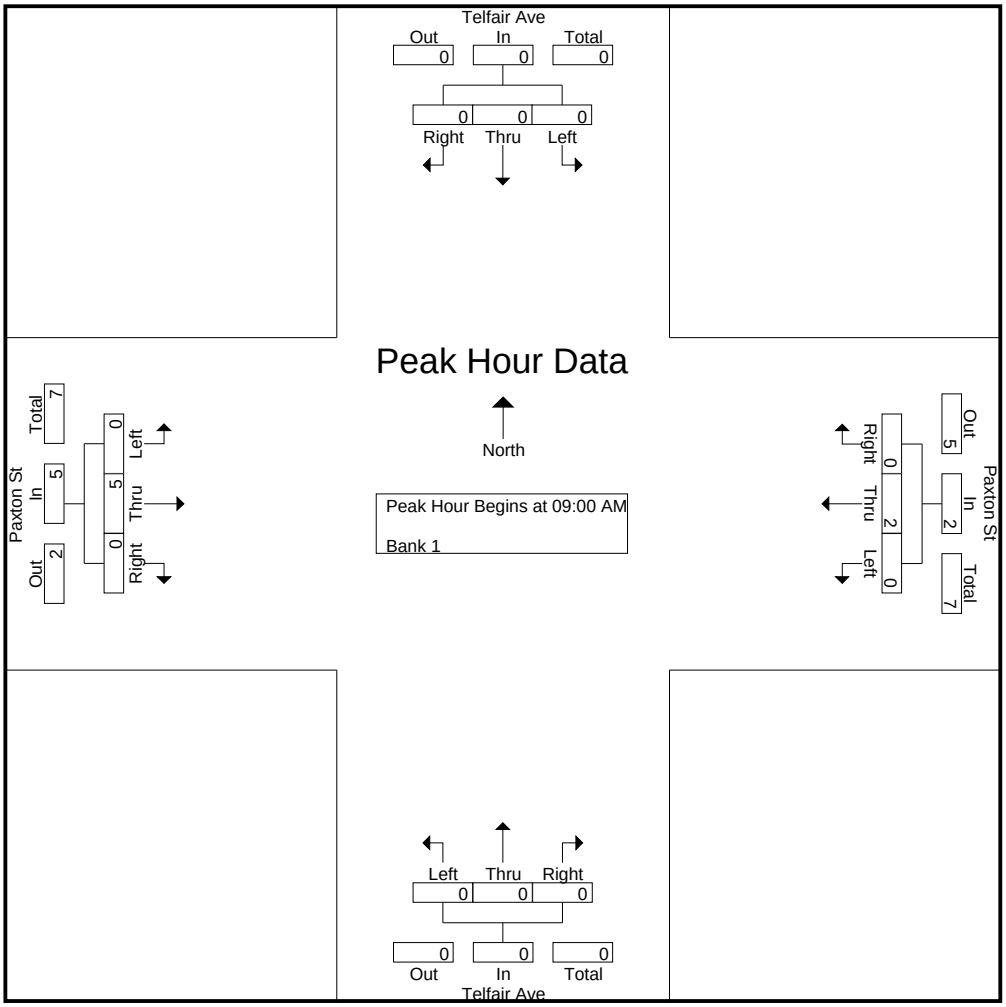

CITY TRAFFIC COUNTERS

626.991.7522

www.ctcounters.com

File Name : Paxton_Telfair_3axle
Site Code : 00000000
Start Date : 3/26/2015
Page No : 3

	Telfair Ave Southbound				Paxton St Westbound				Telfair Ave Northbound				Paxton St Eastbound				
Start Time	Left	Thru	Right	App. Total	Left	Thru	Right	App. Total	Left	Thru	Right	App. Total	Left	Thru	Right	App. Total	Int. Total
Peak Hour Analysis From 10:00 AM to 01:45 PM - Peak 1 of 1																	
Peak Hour for Entire Intersection Begins at 01:00 PM																	
01:00 PM	0	0	0	0	0	**1**	**2**	**3**	0	0	0	0	0	0	0	0	**3**
01:15 PM	0	0	0	0	0	0	0	0	0	0	0	0	0	**3**	0	**3**	3
01:30 PM	0	0	0	0	0	0	0	0	0	0	0	0	0	0	0	0	0
01:45 PM	0	0	0	0	0	0	0	0	0	0	0	0	0	2	0	2	2
Total Volume	0	0	0	0	0	1	2	3	0	0	0	0	0	5	0	5	8
% App. Total	0	0	0		0	33.3	66.7		0	0	0		0	100	0		
PHF	.000	.000	.000	.000	.000	.250	.250	.250	.000	.000	.000	.000	.000	.417	.000	.417	.667

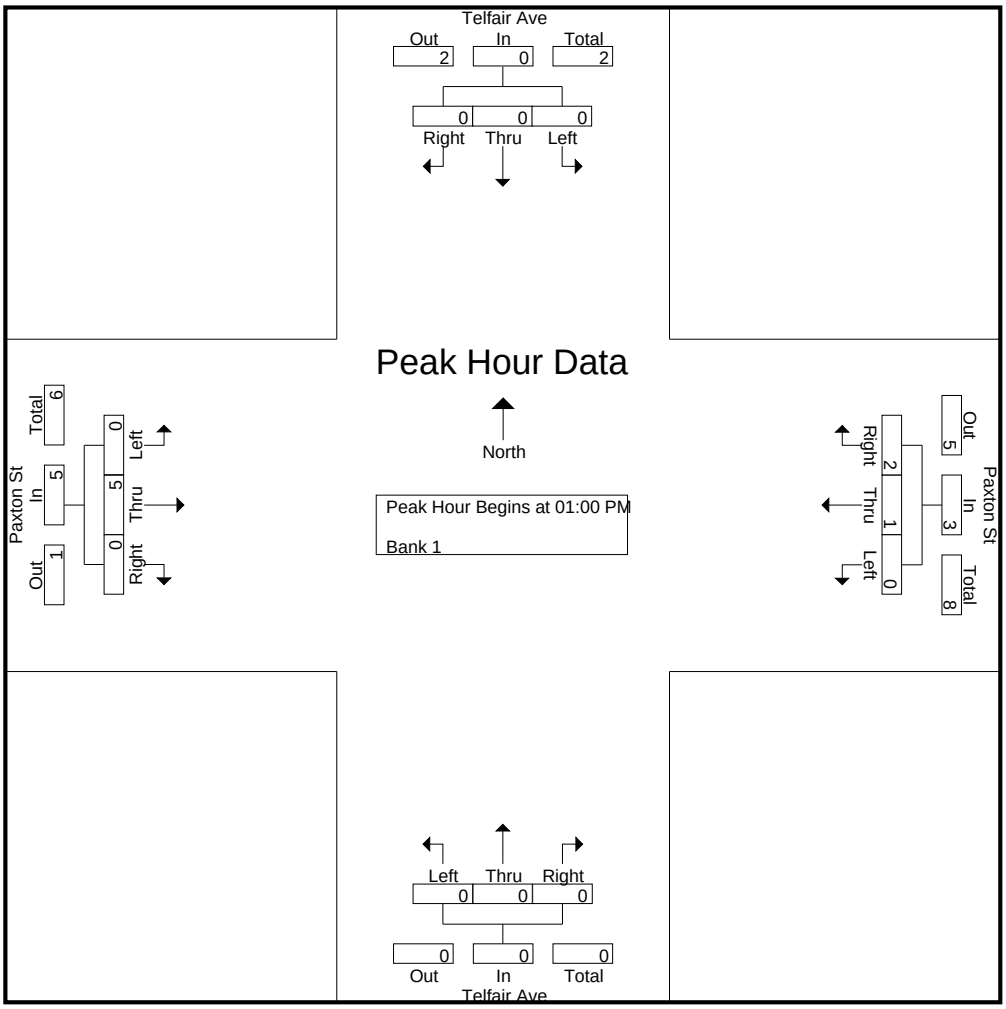

CITY TRAFFIC COUNTERS

626.991.7522

www.ctcounters.com

File Name : Paxton_Telfair_3axle
Site Code : 00000000
Start Date : 3/26/2015
Page No : 4

	Telfair Ave Southbound				Paxton St Westbound				Telfair Ave Northbound				Paxton St Eastbound				
Start Time	Left	Thru	Right	App. Total	Left	Thru	Right	App. Total	Left	Thru	Right	App. Total	Left	Thru	Right	App. Total	Int. Total
Peak Hour Analysis From 02:00 PM to 05:45 PM - Peak 1 of 1																	
Peak Hour for Entire Intersection Begins at 03:30 PM																	
03:30 PM	0	0	0	0	0	1	0	1	0	0	0	0	0	0	0	0	1
03:45 PM	0	0	0	0	0	0	0	0	0	0	0	0	0	0	0	0	0
04:00 PM	0	0	**1**	**1**	0	0	0	0	0	0	0	0	0	**4**	0	**4**	5
04:15 PM	0	0	0	0	**2**	**2**	0	**4**	0	0	0	0	0	2	0	2	**6**
Total Volume	0	0	1	1	2	3	0	5	0	0	0	0	0	6	0	6	12
% App. Total	0	0	100		40	60	0		0	0	0		0	100	0		
PHF	.000	.000	.250	.250	.250	.375	.000	.313	.000	.000	.000	.000	.000	.375	.000	.375	.500

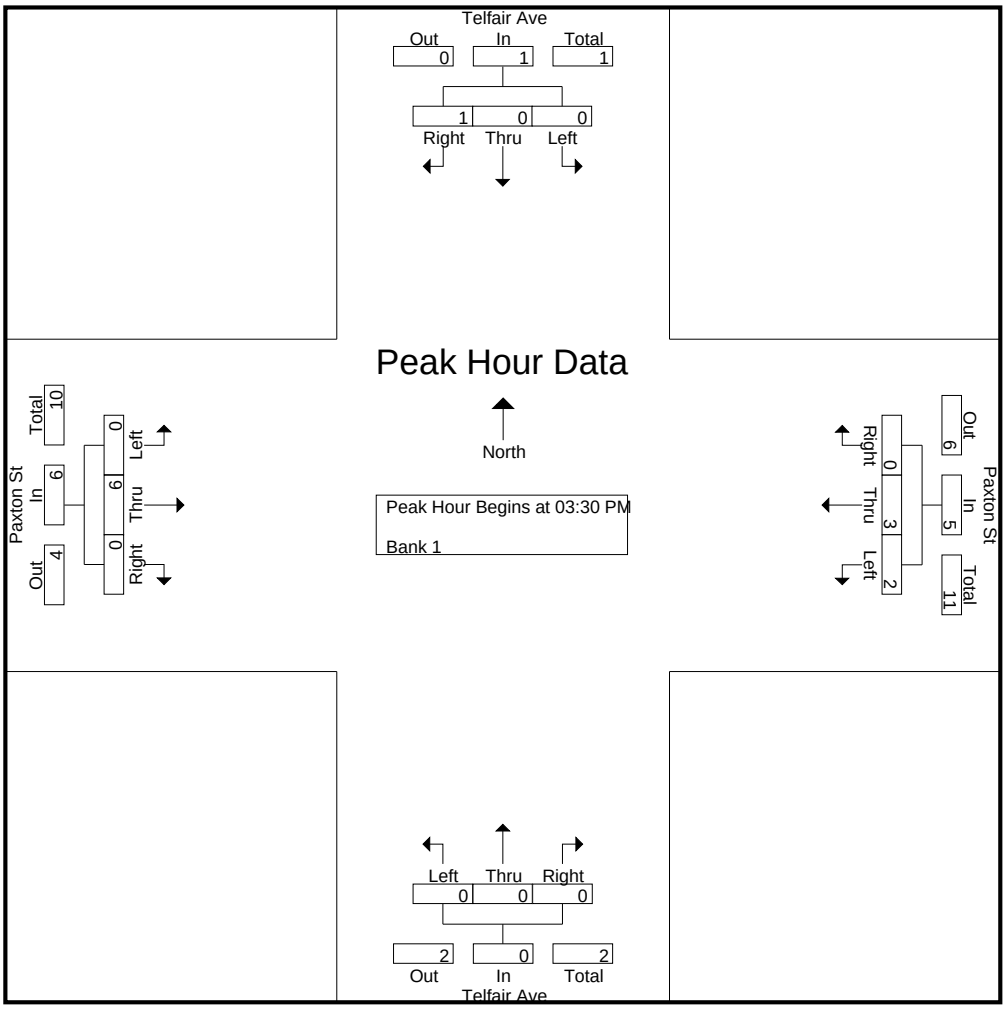

CITY TRAFFIC COUNTERS

626.991.7522

www.ctcounters.com

File Name : Paxton_Telfair_4axle
Site Code : 00000000
Start Date : 3/26/2015
Page No : 1

Groups Printed- Bank 2

	Telfair Ave Southbound			Paxton St Westbound			Telfair Ave Northbound			Paxton St Eastbound			
Start Time	Left	Thru	Right	Left	Thru	Right	Left	Thru	Right	Left	Thru	Right	Int. Total
07:00 AM	0	0	0	0	1	0	0	0	0	0	0	0	1
07:15 AM	0	0	0	0	1	0	0	0	0	0	0	0	1
07:45 AM	0	0	0	0	0	0	0	0	0	0	1	0	1
Total	0	0	0	0	2	0	0	0	0	0	1	0	3
08:00 AM	0	0	0	0	0	0	1	0	0	0	0	0	1
Total	0	0	0	0	0	0	1	0	0	0	0	0	1
09:15 AM	0	0	0	0	1	0	0	0	0	0	0	0	1
09:45 AM	0	0	0	0	1	0	0	0	0	0	0	0	1
Total	0	0	0	0	2	0	0	0	0	0	0	0	2
12:15 PM	0	0	0	0	0	0	0	0	0	0	1	0	1
Total	0	0	0	0	0	0	0	0	0	0	1	0	1
01:15 PM	0	0	0	0	1	0	0	0	0	0	0	0	1
Total	0	0	0	0	1	0	0	0	0	0	0	0	1
04:00 PM	0	0	0	0	1	0	0	0	0	0	0	0	1
Total	0	0	0	0	1	0	0	0	0	0	0	0	1
05:45 PM	0	0	0	0	0	0	0	0	1	0	0	0	1
Total	0	0	0	0	0	0	0	0	1	0	0	0	1
Grand Total	0	0	0	0	6	0	1	0	1	0	2	0	10
Apprch %	0	0	0	0	100	0	50	0	50	0	100	0	
Total %	0	0	0	0	60	0	10	0	10	0	20	0	

CITY TRAFFIC COUNTERS

626.991.7522

www.ctcounters.com

File Name : Paxton_Telfair_4axle
Site Code : 00000000
Start Date : 3/26/2015
Page No : 2

	Telfair Ave Southbound				Paxton St Westbound				Telfair Ave Northbound				Paxton St Eastbound				
Start Time	Left	Thru	Right	App. Total	Left	Thru	Right	App. Total	Left	Thru	Right	App. Total	Left	Thru	Right	App. Total	Int. Total
Peak Hour Analysis From 07:00 AM to 09:45 AM - Peak 1 of 1																	
Peak Hour for Entire Intersection Begins at 07:00 AM																	
07:00 AM	0	0	0	0	0	**1**	0	**1**	0	0	0	0	0	0	0	0	**1**
07:15 AM	0	0	0	0	0	1	0	1	0	0	0	0	0	0	0	0	1
07:30 AM	0	0	0	0	0	0	0	0	0	0	0	0	0	0	0	0	0
07:45 AM	0	0	0	0	0	0	0	0	0	0	0	0	0	**1**	0	**1**	1
Total Volume	0	0	0	0	0	2	0	2	0	0	0	0	0	1	0	1	3
% App. Total	0	0	0		0	100	0		0	0	0		0	100	0		
PHF	.000	.000	.000	.000	.000	.500	.000	.500	.000	.000	.000	.000	.000	.250	.000	.250	.750

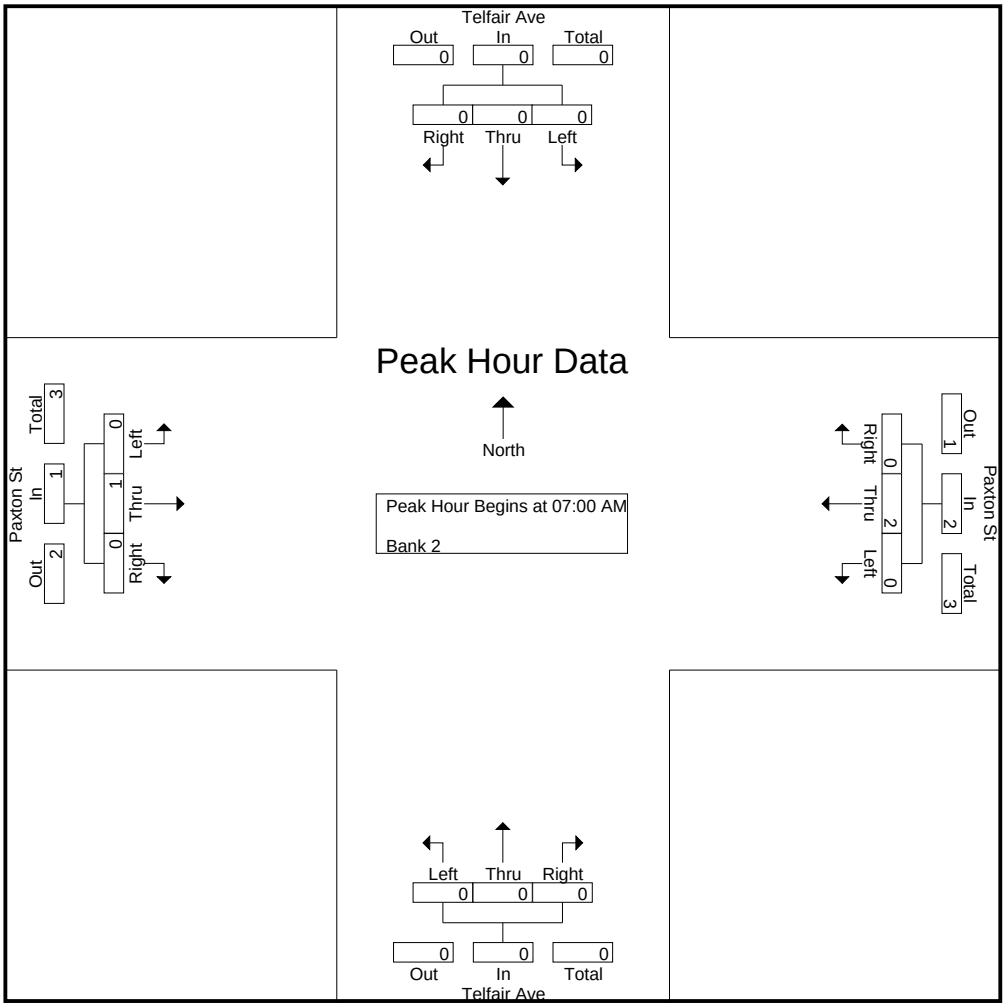

CITY TRAFFIC COUNTERS

626.991.7522

www.ctcounters.com

File Name : Paxton_Telfair_4axle
Site Code : 00000000
Start Date : 3/26/2015
Page No : 3

	Telfair Ave Southbound				Paxton St Westbound				Telfair Ave Northbound				Paxton St Eastbound				
Start Time	Left	Thru	Right	App. Total	Left	Thru	Right	App. Total	Left	Thru	Right	App. Total	Left	Thru	Right	App. Total	Int. Total
Peak Hour Analysis From 10:00 AM to 01:45 PM - Peak 1 of 1																	
Peak Hour for Entire Intersection Begins at 11:30 AM																	
11:30 AM	0	0	0	0	0	0	0	0	0	0	0	0	0	0	0	0	0
11:45 AM	0	0	0	0	0	0	0	0	0	0	0	0	0	0	0	0	0
12:00 PM	0	0	0	0	0	0	0	0	0	0	0	0	0	0	0	0	0
12:15 PM	0	0	0	0	0	0	0	0	0	0	0	0	0	**1**	0	**1**	**1**
Total Volume	0	0	0	0	0	0	0	0	0	0	0	0	0	1	0	1	1
% App. Total	0	0	0		0	0	0		0	0	0		0	100	0		
PHF	.000	.000	.000	.000	.000	.000	.000	.000	.000	.000	.000	.000	.000	.250	.000	.250	.250

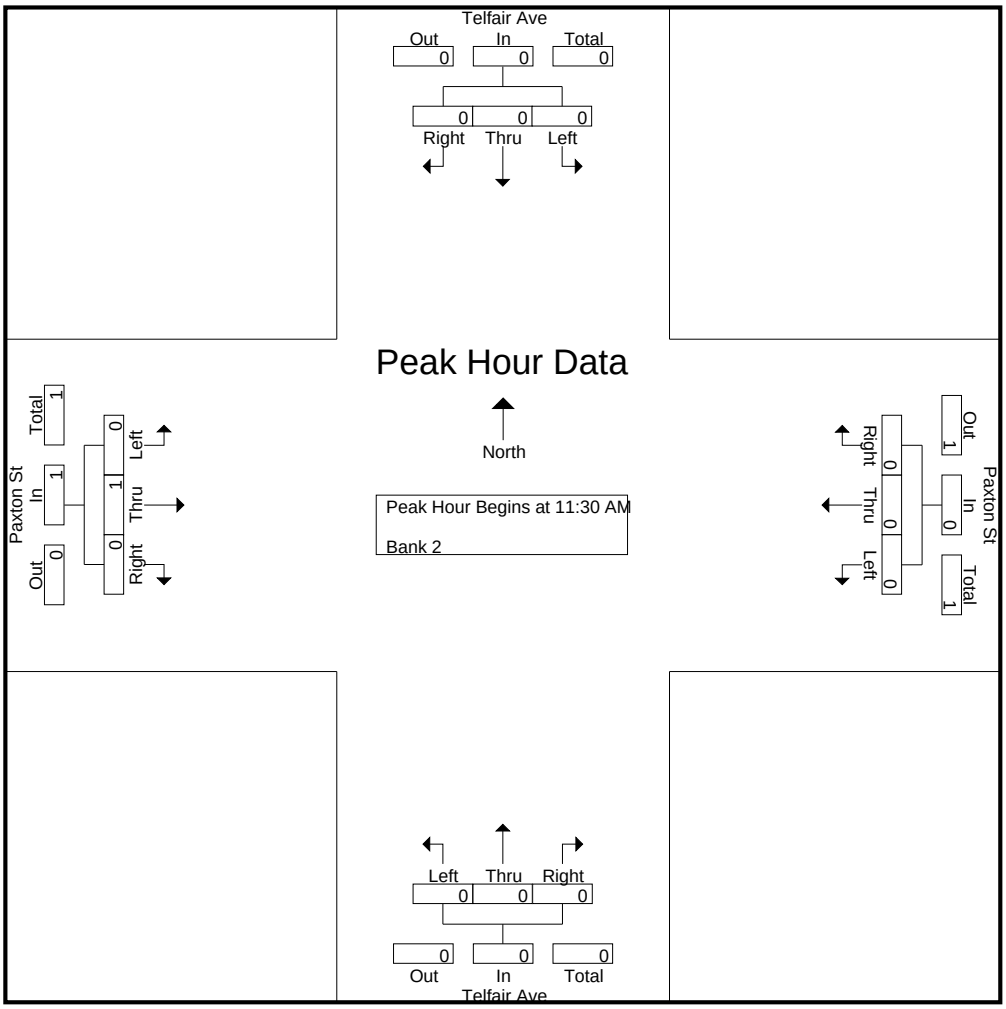

CITY TRAFFIC COUNTERS

626.991.7522

www.ctcounters.com

File Name : Paxton_Telfair_4axle
Site Code : 00000000
Start Date : 3/26/2015
Page No : 4

	Telfair Ave Southbound				Paxton St Westbound				Telfair Ave Northbound				Paxton St Eastbound				
Start Time	Left	Thru	Right	App. Total	Left	Thru	Right	App. Total	Left	Thru	Right	App. Total	Left	Thru	Right	App. Total	Int. Total
Peak Hour Analysis From 02:00 PM to 05:45 PM - Peak 1 of 1																	
Peak Hour for Entire Intersection Begins at 03:15 PM																	
03:15 PM	0	0	0	0	0	0	0	0	0	0	0	0	0	0	0	0	0
03:30 PM	0	0	0	0	0	0	0	0	0	0	0	0	0	0	0	0	0
03:45 PM	0	0	0	0	0	0	0	0	0	0	0	0	0	0	0	0	0
04:00 PM	0	0	0	0	0	**1**	0	**1**	0	0	0	0	0	0	0	0	**1**
Total Volume	0	0	0	0	0	1	0	1	0	0	0	0	0	0	0	0	1
% App. Total	0	0	0		0	100	0		0	0	0		0	0	0		
PHF	.000	.000	.000	.000	.000	.250	.000	.250	.000	.000	.000	.000	.000	.000	.000	.000	.250

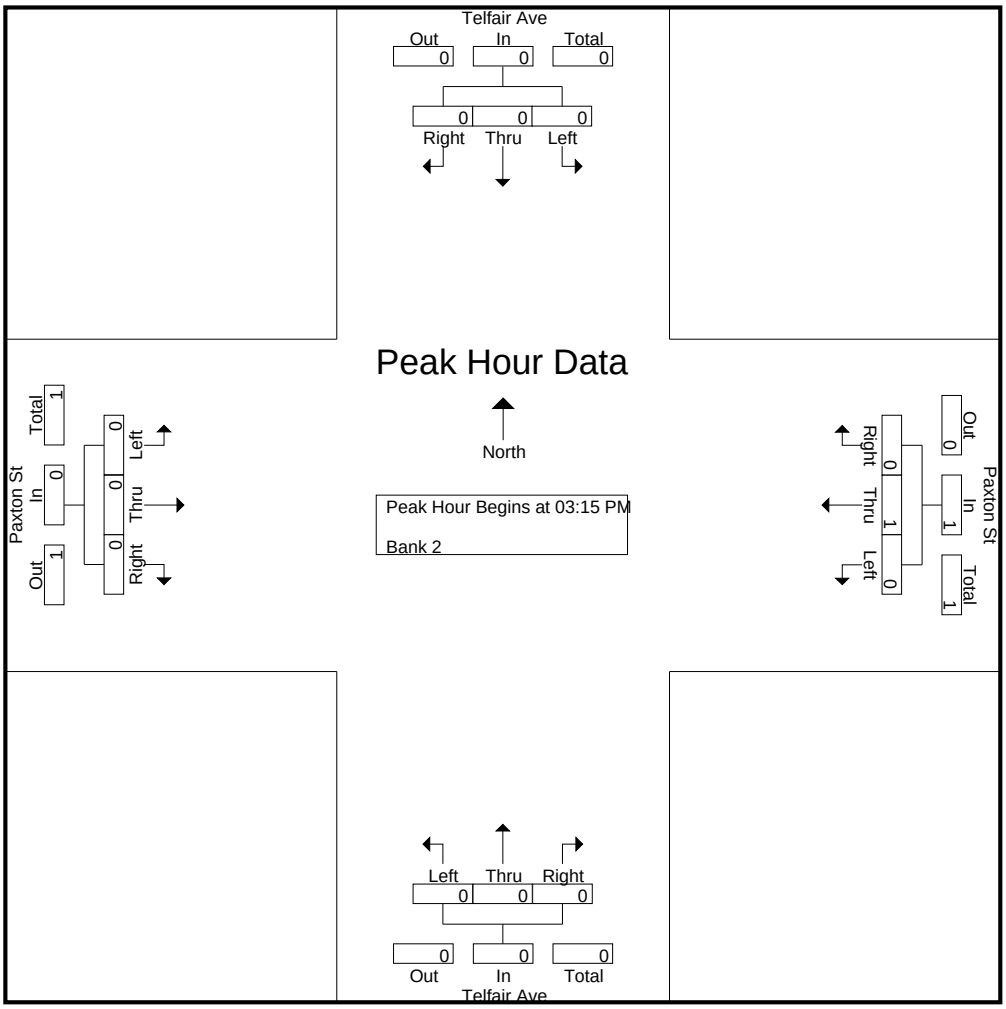

CITY TRAFFIC COUNTERS

626.991.7522

www.ctcounters.com

File Name : paxton_telfair_5axle
Site Code : 00000000
Start Date : 3/26/2015
Page No : 1

Groups Printed- Unshifted

	Telfair Ave Southbound			Paxton St Westbound			Telfair Ave Northbound			Paxton St Eastbound			
Start Time	Left	Thru	Right	Left	Thru	Right	Left	Thru	Right	Left	Thru	Right	Int. Total
08:15 AM	0	0	0	0	0	1	0	0	0	0	0	0	1
Total	0	0	0	0	0	1	0	0	0	0	0	0	1
09:30 AM	1	0	0	0	0	0	0	0	0	0	1	0	2
Total	1	0	0	0	0	0	0	0	0	0	1	0	2
12:45 PM	0	0	0	0	1	0	0	0	0	0	0	0	1
Total	0	0	0	0	1	0	0	0	0	0	0	0	1
03:00 PM	0	0	0	0	0	0	0	0	0	0	1	0	1
Total	0	0	0	0	0	0	0	0	0	0	1	0	1
04:00 PM	0	0	0	0	1	0	0	0	0	0	1	0	2
04:30 PM	0	0	0	0	0	0	0	0	0	0	1	0	1
Total	0	0	0	0	1	0	0	0	0	0	2	0	3
Grand Total	1	0	0	0	2	1	0	0	0	0	4	0	8
Apprch %	100	0	0	0	66.7	33.3	0	0	0	0	100	0	
Total %	12.5	0	0	0	25	12.5	0	0	0	0	50	0	

CITY TRAFFIC COUNTERS

626.991.7522

www.ctcounters.com

File Name : paxton_telfair_5axle
Site Code : 00000000
Start Date : 3/26/2015
Page No : 2

	Telfair Ave Southbound				Paxton St Westbound				Telfair Ave Northbound				Paxton St Eastbound				
Start Time	Left	Thru	Right	App. Total	Left	Thru	Right	App. Total	Left	Thru	Right	App. Total	Left	Thru	Right	App. Total	Int. Total
Peak Hour Analysis From 07:00 AM to 09:45 AM - Peak 1 of 1																	
Peak Hour for Entire Intersection Begins at 08:45 AM																	
08:45 AM	0	0	0	0	0	0	0	0	0	0	0	0	0	0	0	0	0
09:00 AM	0	0	0	0	0	0	0	0	0	0	0	0	0	0	0	0	0
09:15 AM	0	0	0	0	0	0	0	0	0	0	0	0	0	0	0	0	0
09:30 AM	**1**	0	0	**1**	0	0	0	0	0	0	0	0	0	**1**	0	**1**	**2**
Total Volume	1	0	0	1	0	0	0	0	0	0	0	0	0	1	0	1	2
% App. Total	100	0	0		0	0	0		0	0	0		0	100	0		
PHF	.250	.000	.000	.250	.000	.000	.000	.000	.000	.000	.000	.000	.000	.250	.000	.250	.250

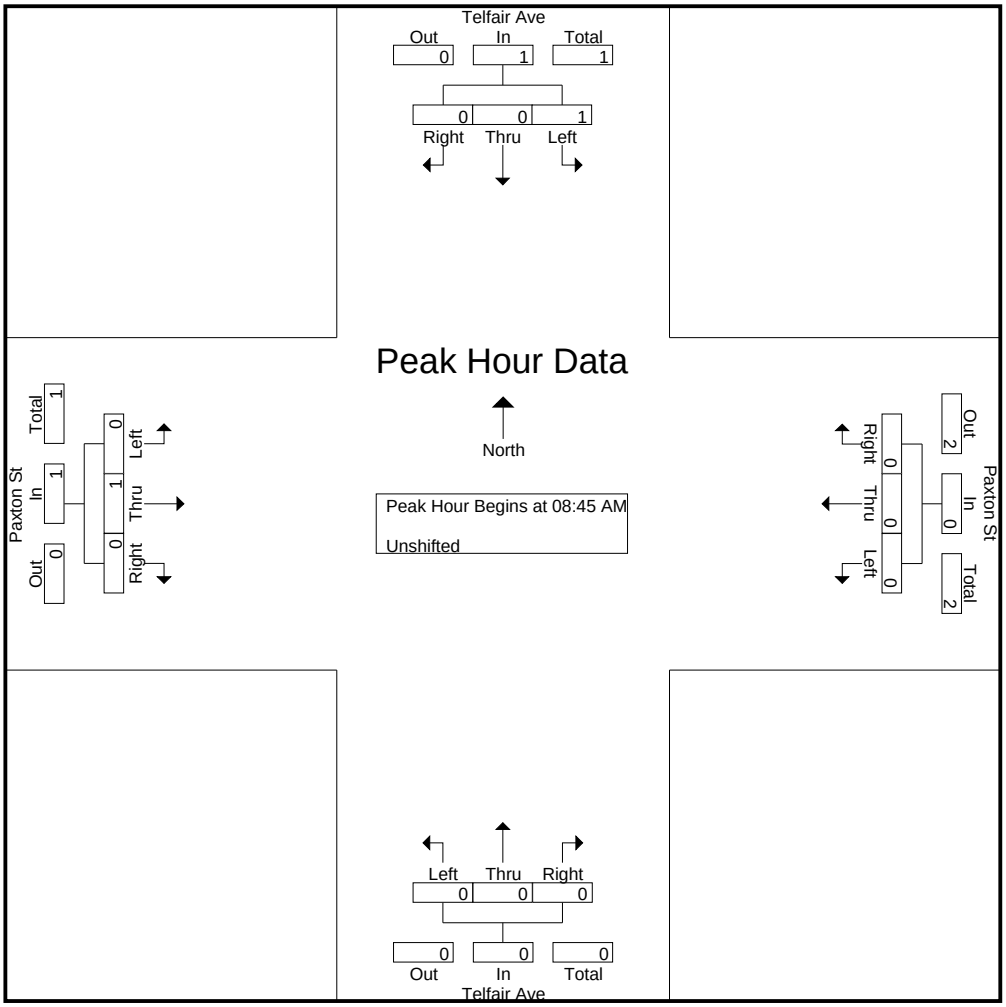

CITY TRAFFIC COUNTERS

626.991.7522

www.ctcounters.com

File Name : paxton_telfair_5axle
Site Code : 00000000
Start Date : 3/26/2015
Page No : 3

	Telfair Ave Southbound				Paxton St Westbound				Telfair Ave Northbound				Paxton St Eastbound				
Start Time	Left	Thru	Right	App. Total	Left	Thru	Right	App. Total	Left	Thru	Right	App. Total	Left	Thru	Right	App. Total	Int. Total
Peak Hour Analysis From 10:00 AM to 01:45 PM - Peak 1 of 1																	
Peak Hour for Entire Intersection Begins at 12:00 PM																	
12:00 PM	0	0	0	0	0	0	0	0	0	0	0	0	0	0	0	0	0
12:15 PM	0	0	0	0	0	0	0	0	0	0	0	0	0	0	0	0	0
12:30 PM	0	0	0	0	0	0	0	0	0	0	0	0	0	0	0	0	0
12:45 PM	0	0	0	0	0	**1**	0	**1**	0	0	0	0	0	0	0	0	**1**
Total Volume	0	0	0	0	0	1	0	1	0	0	0	0	0	0	0	0	1
% App. Total	0	0	0		0	100	0		0	0	0		0	0	0		
PHF	.000	.000	.000	.000	.000	.250	.000	.250	.000	.000	.000	.000	.000	.000	.000	.000	.250

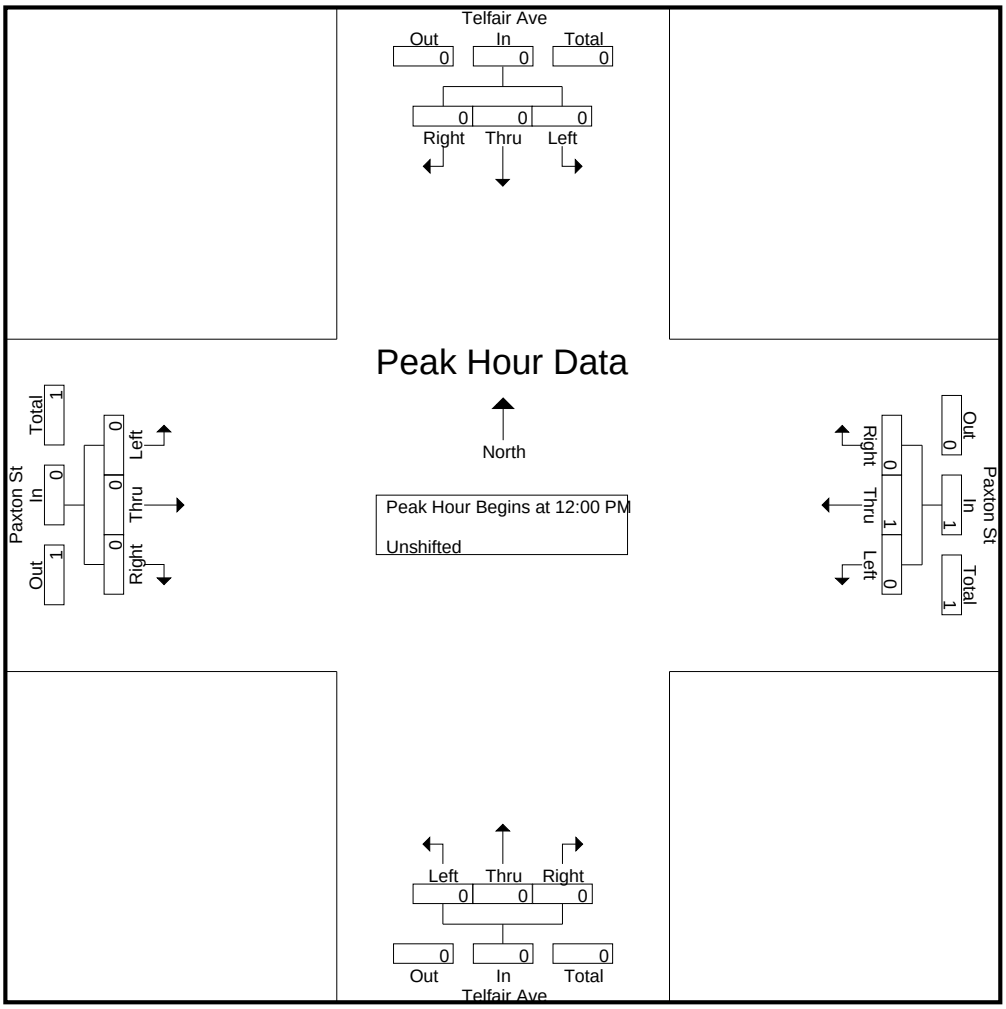

CITY TRAFFIC COUNTERS

626.991.7522

www.ctcounters.com

File Name : paxton_telfair_5axle
Site Code : 00000000
Start Date : 3/26/2015
Page No : 4

	Telfair Ave Southbound				Paxton St Westbound				Telfair Ave Northbound				Paxton St Eastbound				
Start Time	Left	Thru	Right	App. Total	Left	Thru	Right	App. Total	Left	Thru	Right	App. Total	Left	Thru	Right	App. Total	Int. Total
Peak Hour Analysis From 02:00 PM to 05:45 PM - Peak 1 of 1																	
Peak Hour for Entire Intersection Begins at 03:45 PM																	
03:45 PM	0	0	0	0	0	0	0	0	0	0	0	0	0	0	0	0	0
04:00 PM	0	0	0	0	0	**1**	0	**1**	0	0	0	0	0	**1**	0	**1**	**2**
04:15 PM	0	0	0	0	0	0	0	0	0	0	0	0	0	0	0	0	0
04:30 PM	0	0	0	0	0	0	0	0	0	0	0	0	0	1	0	1	1
Total Volume	0	0	0	0	0	1	0	1	0	0	0	0	0	2	0	2	3
% App. Total	0	0	0		0	100	0		0	0	0		0	100	0		
PHF	.000	.000	.000	.000	.000	.250	.000	.250	.000	.000	.000	.000	.000	.500	.000	.500	.375

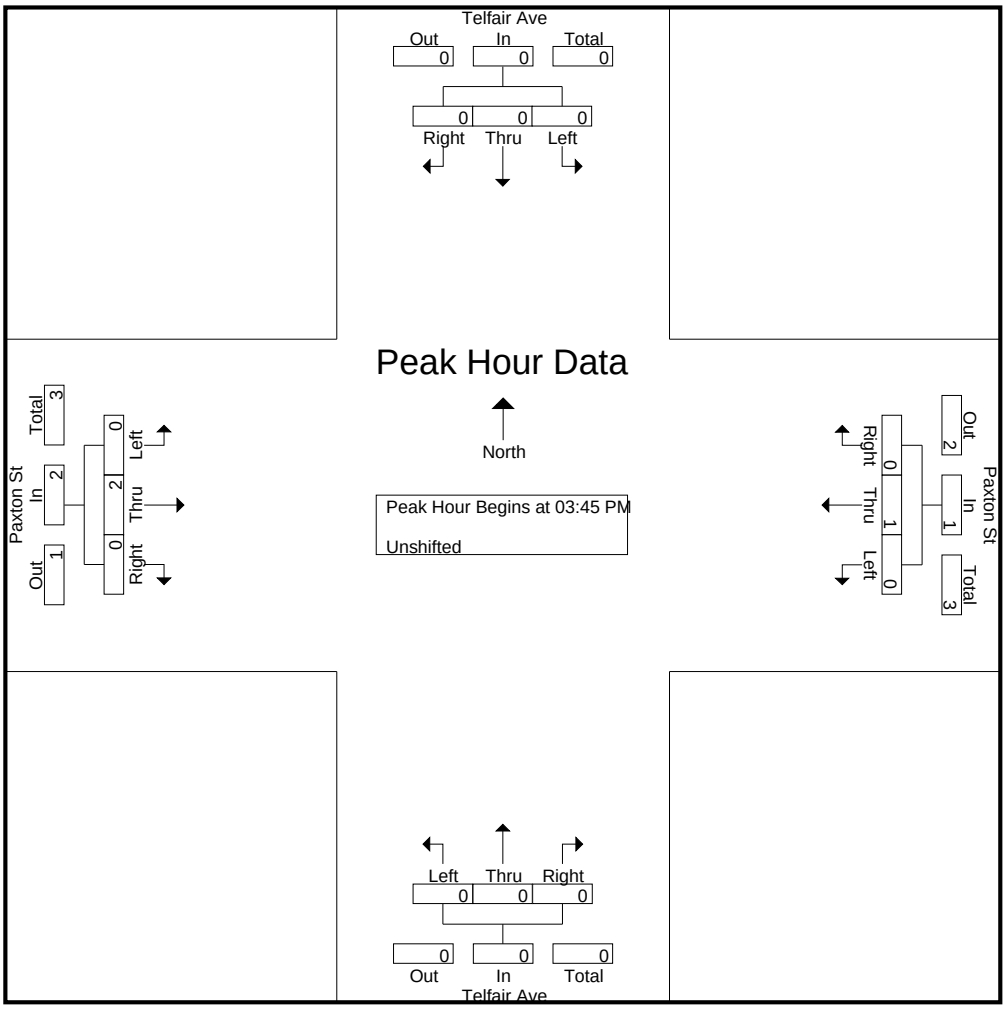

CITY TRAFFIC COUNTERS

626.991.7522

www.ctcounters.com

File Name : Paxton_SanFernando
Site Code : 00000000
Start Date : 3/25/2015
Page No : 1

Groups Printed- Unshifted

	San Fernando Rd Southbound			Paxton St Westbound			San Fernando Rd Northbound			Paxton St Eastbound			
Start Time	Left	Thru	Right	Left	Thru	Right	Left	Thru	Right	Left	Thru	Right	Int. Total
07:00 AM	28	114	30	22	103	62	6	99	87	23	96	2	672
07:15 AM	31	139	31	30	111	77	7	133	74	15	180	4	832
07:30 AM	38	171	60	29	138	77	5	127	85	18	171	1	920
07:45 AM	44	174	69	32	129	81	6	194	95	19	206	1	1050
Total	141	598	190	113	481	297	24	553	341	75	653	8	3474
08:00 AM	39	144	71	31	104	62	9	141	100	17	161	0	879
08:15 AM	30	145	37	16	98	69	4	137	81	18	126	0	761
08:30 AM	33	111	33	15	94	71	1	129	63	16	85	1	652
08:45 AM	21	91	30	11	69	60	4	130	79	23	97	2	617
Total	123	491	171	73	365	262	18	537	323	74	469	3	2909
09:00 AM	22	88	31	22	63	71	2	124	80	20	50	1	574
09:15 AM	30	103	28	27	68	52	3	133	80	14	85	1	624
09:30 AM	37	104	28	20	70	73	4	152	81	18	113	0	700
09:45 AM	41	96	24	23	70	56	2	175	87	14	76	1	665
Total	130	391	111	92	271	252	11	584	328	66	324	3	2563
12:00 PM	32	96	19	28	73	81	6	144	107	12	113	11	722
12:15 PM	44	117	19	45	110	80	4	158	76	11	71	20	755
12:30 PM	49	133	34	37	97	100	8	171	79	23	72	24	827
12:45 PM	31	103	21	29	56	57	6	175	62	19	82	27	668
Total	156	449	93	139	336	318	24	648	324	65	338	82	2972
01:00 PM	39	99	16	45	95	105	9	169	51	22	76	27	753
01:15 PM	32	98	11	36	79	83	7	153	44	17	65	24	649
01:30 PM	34	122	20	44	84	73	6	152	52	16	77	25	705
01:45 PM	37	108	16	34	103	90	4	159	66	15	84	27	743
Total	142	427	63	159	361	351	26	633	213	70	302	103	2850
03:00 PM	45	114	16	32	108	87	5	180	88	26	94	23	818
03:15 PM	25	140	17	31	93	95	7	177	81	26	121	18	831
03:30 PM	30	142	24	26	129	90	3	163	79	26	112	30	854
03:45 PM	44	194	37	26	125	74	5	156	91	26	115	30	923
Total	144	590	94	115	455	346	20	676	339	104	442	101	3426
04:00 PM	25	180	17	20	126	71	6	144	67	20	119	25	820
04:15 PM	13	155	17	25	94	76	3	170	64	26	122	30	795
04:30 PM	21	187	43	42	140	77	2	177	78	26	113	27	933
04:45 PM	31	172	32	38	160	85	8	154	73	19	127	27	926
Total	90	694	109	125	520	309	19	645	282	91	481	109	3474
05:00 PM	31	178	33	30	104	83	11	152	60	20	146	51	899
05:15 PM	30	140	26	36	129	70	1	164	61	22	174	38	891
05:30 PM	44	161	34	39	121	76	7	181	75	26	166	39	969
05:45 PM	33	129	26	25	124	97	7	184	54	26	184	33	922
Total	138	608	119	130	478	326	26	681	250	94	670	161	3681
Grand Total	1064	4248	950	946	3267	2461	168	4957	2400	639	3679	570	25349
Apprch %	17	67.8	15.2	14.2	49	36.9	2.2	65.9	31.9	13.1	75.3	11.7	
Total %	4.2	16.8	3.7	3.7	12.9	9.7	0.7	19.6	9.5	2.5	14.5	2.2	

CITY TRAFFIC COUNTERS

626.991.7522

www.ctcounters.com

File Name : Paxton_SanFernando
Site Code : 00000000
Start Date : 3/25/2015
Page No : 2

	San Fernando Rd Southbound				Paxton St Westbound				San Fernando Rd Northbound				Paxton St Eastbound				
Start Time	Left	Thru	Right	App. Total	Left	Thru	Right	App. Total	Left	Thru	Right	App. Total	Left	Thru	Right	App. Total	Int. Total
Peak Hour Analysis From 07:00 AM to 09:45 AM - Peak 1 of 1																	
Peak Hour for Entire Intersection Begins at 07:15 AM																	
07:15 AM	31	139	31	201	30	111	77	218	7	133	74	214	15	180	**4**	199	832
07:30 AM	38	171	60	269	29	**138**	77	**244**	5	127	85	217	18	171	1	190	920
07:45 AM	**44**	**174**	69	**287**	**32**	129	**81**	242	6	**194**	95	**295**	**19**	**206**	1	**226**	**1050**
08:00 AM	39	144	**71**	254	31	104	62	197	**9**	141	**100**	250	17	161	0	178	879
Total Volume	152	628	231	1011	122	482	297	901	27	595	354	976	69	718	6	793	3681
% App. Total	15	62.1	22.8		13.5	53.5	33		2.8	61	36.3		8.7	90.5	0.8		
PHF	.864	.902	.813	.881	.953	.873	.917	.923	.750	.767	.885	.827	.908	.871	.375	.877	.876

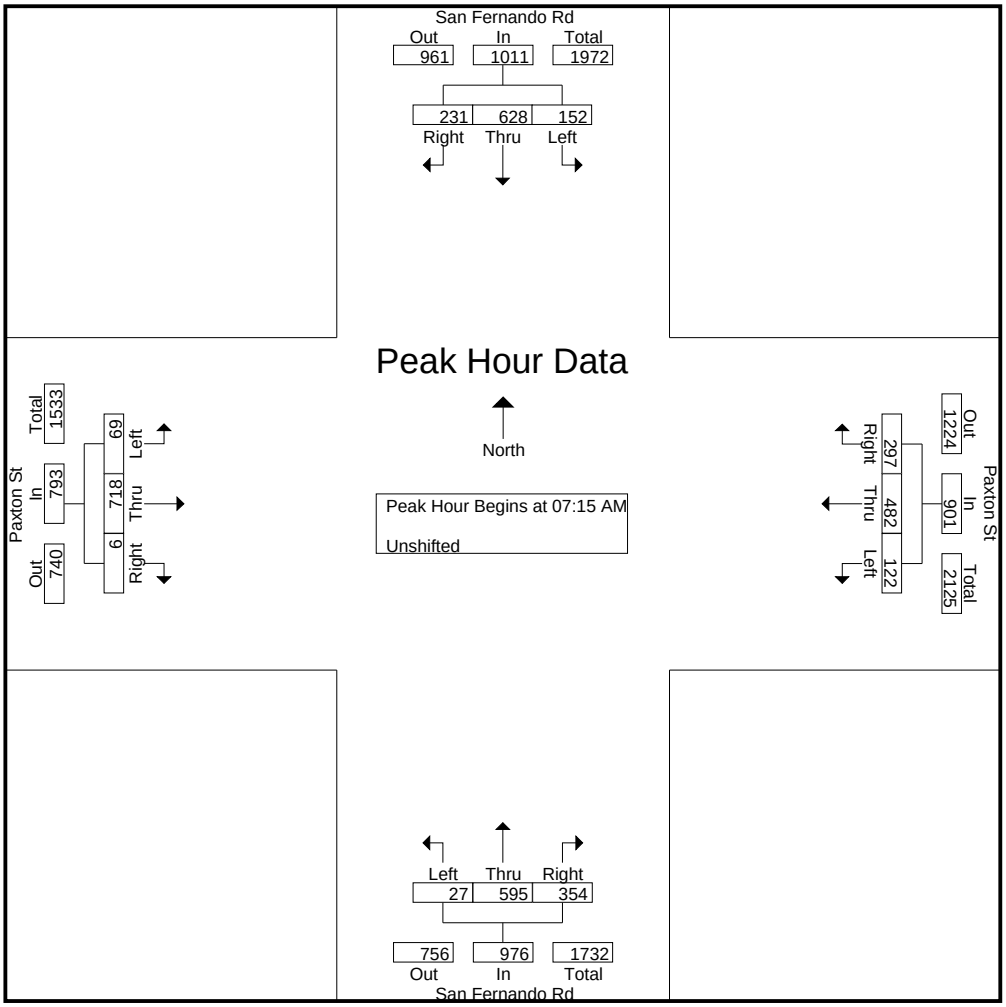

CITY TRAFFIC COUNTERS

626.991.7522

www.ctcounters.com

File Name : Paxton_SanFernando
Site Code : 00000000
Start Date : 3/25/2015
Page No : 3

	San Fernando Rd Southbound				Paxton St Westbound				San Fernando Rd Northbound				Paxton St Eastbound				
Start Time	Left	Thru	Right	App. Total	Left	Thru	Right	App. Total	Left	Thru	Right	App. Total	Left	Thru	Right	App. Total	Int. Total
Peak Hour Analysis From 10:00 AM to 01:45 PM - Peak 1 of 1																	
Peak Hour for Entire Intersection Begins at 12:15 PM																	
12:15 PM	44	117	19	180	**45**	**110**	80	235	4	158	76	238	11	71	20	102	755
12:30 PM	**49**	**133**	**34**	**216**	37	97	100	234	8	171	**79**	**258**	**23**	72	24	119	**827**
12:45 PM	31	103	21	155	29	56	57	142	6	**175**	62	243	19	**82**	**27**	**128**	668
01:00 PM	39	99	16	154	45	95	**105**	**245**	**9**	169	51	229	22	76	27	125	753
Total Volume	163	452	90	705	156	358	342	856	27	673	268	968	75	301	98	474	3003
% App. Total	23.1	64.1	12.8		18.2	41.8	40		2.8	69.5	27.7		15.8	63.5	20.7		
PHF	.832	.850	.662	.816	.867	.814	.814	.873	.750	.961	.848	.938	.815	.918	.907	.926	.908

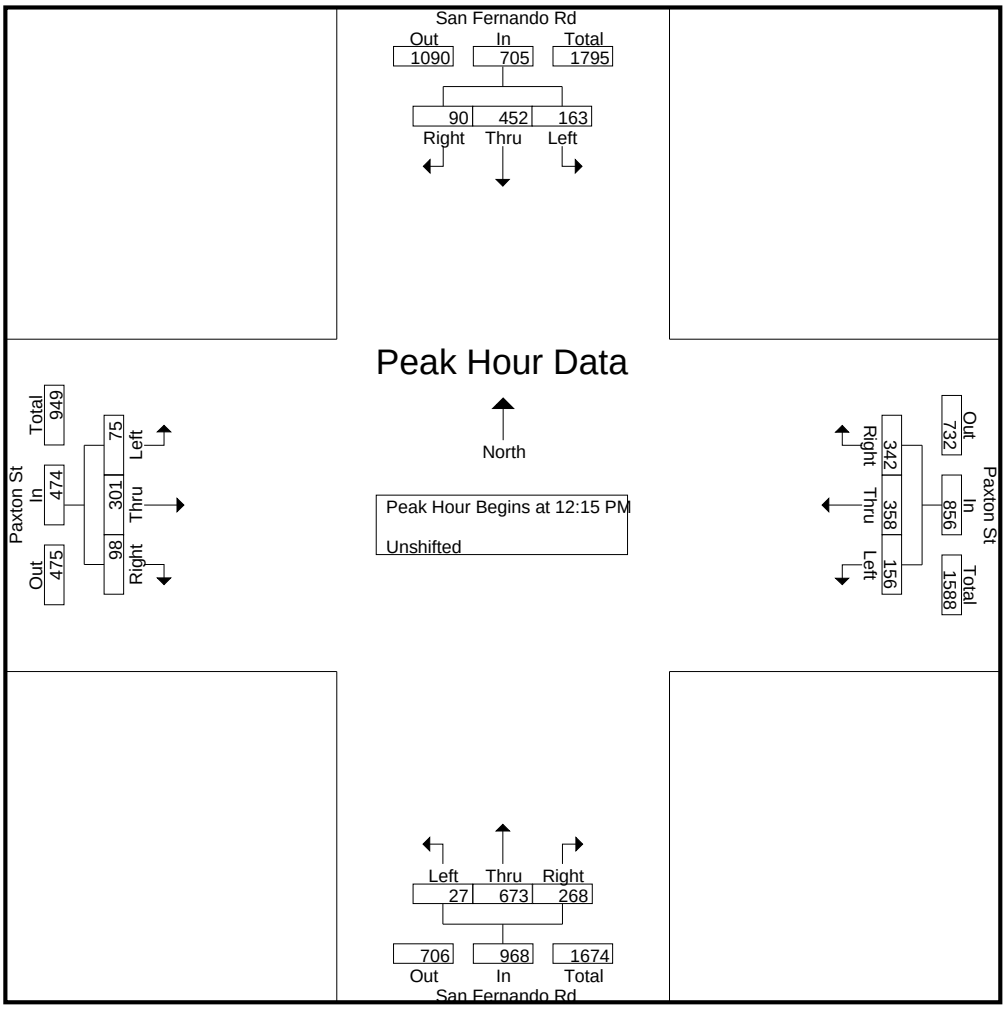

CITY TRAFFIC COUNTERS

626.991.7522

www.ctcounters.com

File Name : Paxton_SanFernando
Site Code : 00000000
Start Date : 3/25/2015
Page No : 4

	San Fernando Rd Southbound				Paxton St Westbound				San Fernando Rd Northbound				Paxton St Eastbound				
Start Time	Left	Thru	Right	App. Total	Left	Thru	Right	App. Total	Left	Thru	Right	App. Total	Left	Thru	Right	App. Total	Int. Total
Peak Hour Analysis From 02:00 PM to 05:45 PM - Peak 1 of 1																	
Peak Hour for Entire Intersection Begins at 04:45 PM																	
04:45 PM	31	172	32	235	38	**160**	**85**	**283**	8	154	73	235	19	127	27	173	926
05:00 PM	31	**178**	33	**242**	30	104	83	217	**11**	152	60	223	20	146	**51**	217	899
05:15 PM	30	140	26	196	36	129	70	235	1	164	61	226	22	**174**	38	**234**	891
05:30 PM	**44**	161	**34**	239	**39**	121	76	236	7	**181**	**75**	**263**	**26**	166	39	231	**969**
Total Volume	136	651	125	912	143	514	314	971	27	651	269	947	87	613	155	855	3685
% App. Total	14.9	71.4	13.7		14.7	52.9	32.3		2.9	68.7	28.4		10.2	71.7	18.1		
PHF	.773	.914	.919	.942	.917	.803	.924	.858	.614	.899	.897	.900	.837	.881	.760	.913	.951

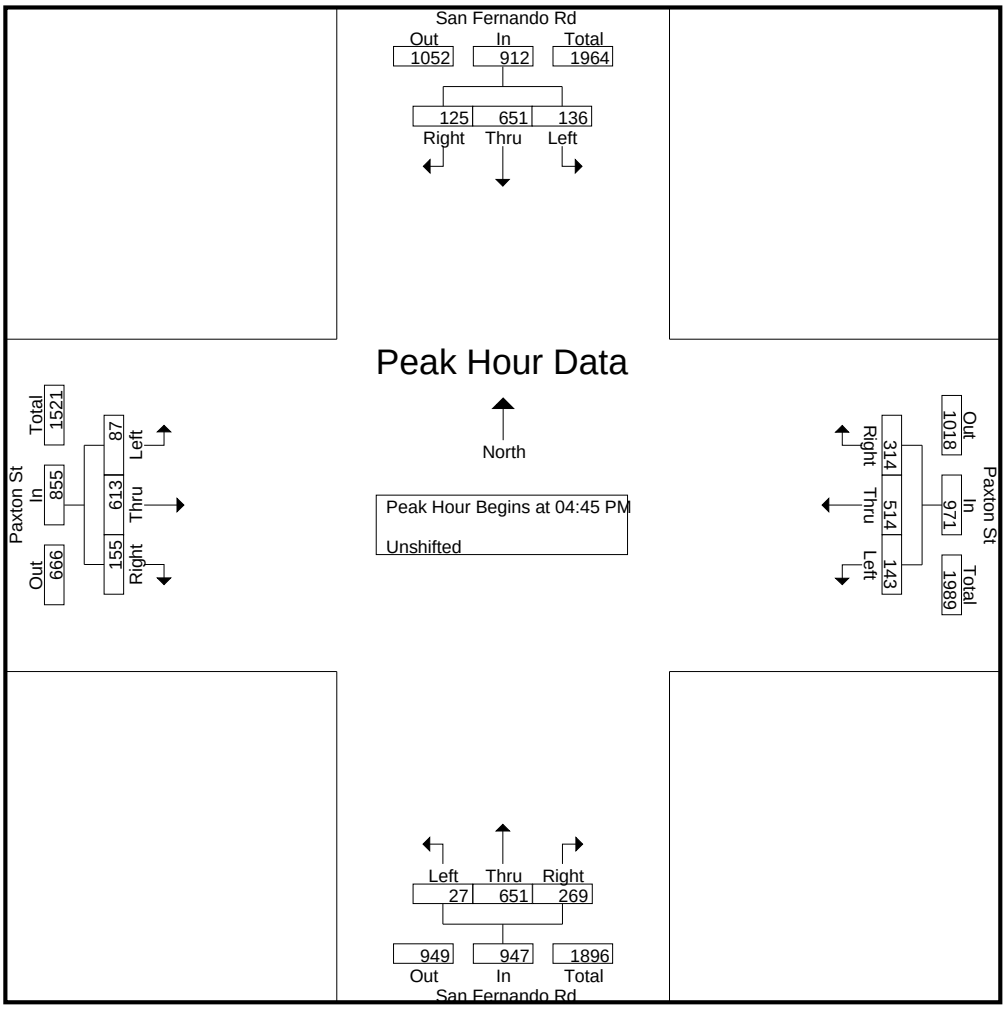

CITY TRAFFIC COUNTERS

626.991.7522

www.ctcounters.com

File Name : Paxton_SanFernando_Motorcycles
Site Code : 00000000
Start Date : 3/25/2015
Page No : 1

Groups Printed- Bank 2

	San Fernando Rd Southbound			Paxton St Westbound			San Fernando Rd Northbound			Paxton St Eastbound			
Start Time	Left	Thru	Right	Left	Thru	Right	Left	Thru	Right	Left	Thru	Right	Int. Total
07:00 AM	1	0	0	0	0	0	0	0	1	0	0	0	2
07:15 AM	0	0	0	0	0	1	0	0	0	0	0	0	1
07:45 AM	0	1	1	0	0	0	0	1	0	0	1	0	4
Total	1	1	1	0	0	1	0	1	1	0	1	0	7
08:00 AM	0	0	0	0	0	0	0	1	1	0	0	0	2
Total	0	0	0	0	0	0	0	1	1	0	0	0	2
09:00 AM	0	0	0	0	0	0	0	0	1	0	0	0	1
09:15 AM	0	0	0	0	0	0	0	1	0	0	0	0	1
Total	0	0	0	0	0	0	0	1	1	0	0	0	2
12:00 PM	0	0	0	0	0	0	0	0	1	0	0	0	1
12:15 PM	0	0	0	0	0	0	0	0	1	0	0	0	1
12:30 PM	0	0	0	0	0	0	0	1	0	0	0	0	1
12:45 PM	0	0	0	0	0	0	0	0	1	0	0	0	1
Total	0	0	0	0	0	0	0	1	3	0	0	0	4
01:45 PM	0	0	0	0	1	1	0	0	0	0	0	0	2
Total	0	0	0	0	1	1	0	0	0	0	0	0	2
03:00 PM	0	1	0	0	0	0	0	1	0	0	0	0	2
03:15 PM	0	0	0	0	0	0	0	1	0	0	0	0	1
03:30 PM	0	0	0	0	0	0	0	1	0	0	0	0	1
03:45 PM	0	1	0	0	0	0	0	0	0	0	0	0	1
Total	0	2	0	0	0	0	0	3	0	0	0	0	5
04:30 PM	0	0	0	0	1	1	0	0	0	0	0	0	2
04:45 PM	0	1	0	0	0	0	0	0	0	0	0	0	1
Total	0	1	0	0	1	1	0	0	0	0	0	0	3
05:00 PM	0	0	0	1	2	0	0	1	0	0	0	0	4
05:15 PM	0	0	0	0	0	1	0	0	0	0	0	0	1
05:30 PM	0	0	0	0	0	0	0	1	0	0	0	0	1
Total	0	0	0	1	2	1	0	2	0	0	0	0	6
Grand Total	1	4	1	1	4	4	0	9	6	0	1	0	31
Apprch %	16.7	66.7	16.7	11.1	44.4	44.4	0	60	40	0	100	0	
Total %	3.2	12.9	3.2	3.2	12.9	12.9	0	29	19.4	0	3.2	0	

CITY TRAFFIC COUNTERS

626.991.7522

www.ctcounters.com

File Name : Paxton_SanFernando_Motorcycles
Site Code : 00000000
Start Date : 3/25/2015
Page No : 2

	San Fernando Rd Southbound				Paxton St Westbound				San Fernando Rd Northbound				Paxton St Eastbound				
Start Time	Left	Thru	Right	App. Total	Left	Thru	Right	App. Total	Left	Thru	Right	App. Total	Left	Thru	Right	App. Total	Int. Total
Peak Hour Analysis From 07:00 AM to 09:45 AM - Peak 1 of 1																	
Peak Hour for Entire Intersection Begins at 07:00 AM																	
07:00 AM	**1**	0	0	1	0	0	0	0	0	0	**1**	**1**	0	0	0	0	2
07:15 AM	0	0	0	0	0	0	**1**	**1**	0	0	0	0	0	0	0	0	1
07:30 AM	0	0	0	0	0	0	0	0	0	0	0	0	0	0	0	0	0
07:45 AM	0	**1**	**1**	**2**	0	0	0	0	0	**1**	0	1	0	**1**	0	**1**	**4**
Total Volume	1	1	1	3	0	0	1	1	0	1	1	2	0	1	0	1	7
% App. Total	33.3	33.3	33.3		0	0	100		0	50	50		0	100	0		
PHF	.250	.250	.250	.375	.000	.000	.250	.250	.000	.250	.250	.500	.000	.250	.000	.250	.438

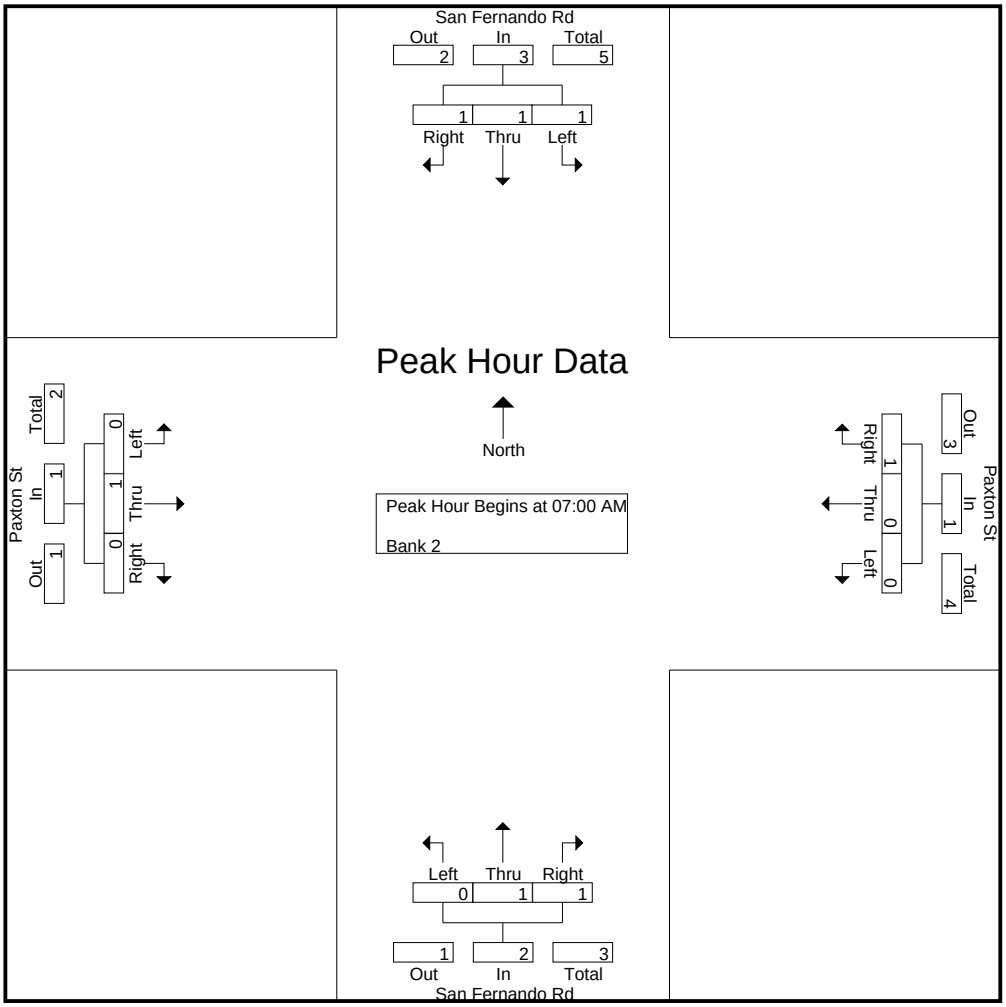

CITY TRAFFIC COUNTERS

626.991.7522

www.ctcounters.com

File Name : Paxton_SanFernando_Motorcycles
Site Code : 00000000
Start Date : 3/25/2015
Page No : 3

	San Fernando Rd Southbound				Paxton St Westbound				San Fernando Rd Northbound				Paxton St Eastbound				
Start Time	Left	Thru	Right	App. Total	Left	Thru	Right	App. Total	Left	Thru	Right	App. Total	Left	Thru	Right	App. Total	Int. Total
Peak Hour Analysis From 10:00 AM to 01:45 PM - Peak 1 of 1																	
Peak Hour for Entire Intersection Begins at 12:00 PM																	
12:00 PM	0	0	0	0	0	0	0	0	0	0	**1**	**1**	0	0	0	0	**1**
12:15 PM	0	0	0	0	0	0	0	0	0	0	1	1	0	0	0	0	1
12:30 PM	0	0	0	0	0	0	0	0	0	**1**	0	1	0	0	0	0	1
12:45 PM	0	0	0	0	0	0	0	0	0	0	1	1	0	0	0	0	1
Total Volume	0	0	0	0	0	0	0	0	0	1	3	4	0	0	0	0	4
% App. Total	0	0	0		0	0	0		0	25	75		0	0	0		
PHF	.000	.000	.000	.000	.000	.000	.000	.000	.000	.250	.750	1.00	.000	.000	.000	.000	1.00

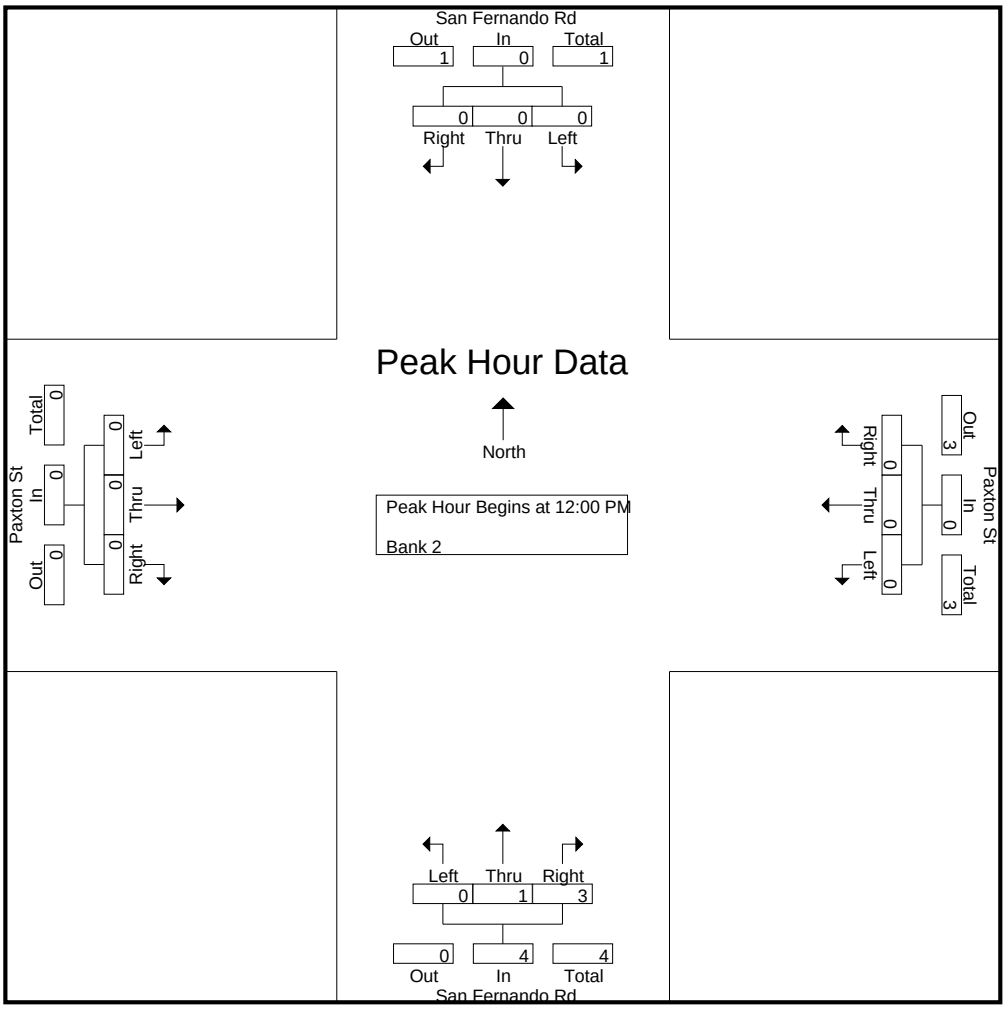

CITY TRAFFIC COUNTERS

626.991.7522

www.ctcounters.com

File Name : Paxton_SanFernando_Motorcycles
Site Code : 00000000
Start Date : 3/25/2015
Page No : 4

	San Fernando Rd Southbound				Paxton St Westbound				San Fernando Rd Northbound				Paxton St Eastbound				
Start Time	Left	Thru	Right	App. Total	Left	Thru	Right	App. Total	Left	Thru	Right	App. Total	Left	Thru	Right	App. Total	Int. Total
Peak Hour Analysis From 02:00 PM to 05:45 PM - Peak 1 of 1																	
Peak Hour for Entire Intersection Begins at 04:30 PM																	
04:30 PM	0	0	0	0	0	1	**1**	2	0	0	0	0	0	0	0	0	2
04:45 PM	0	**1**	0	**1**	0	0	0	0	0	0	0	0	0	0	0	0	1
05:00 PM	0	0	0	0	**1**	**2**	0	**3**	0	**1**	0	**1**	0	0	0	0	**4**
05:15 PM	0	0	0	0	0	0	1	1	0	0	0	0	0	0	0	0	1
Total Volume	0	1	0	1	1	3	2	6	0	1	0	1	0	0	0	0	8
% App. Total	0	100	0		16.7	50	33.3		0	100	0		0	0	0		
PHF	.000	.250	.000	.250	.250	.375	.500	.500	.000	.250	.000	.250	.000	.000	.000	.000	.500

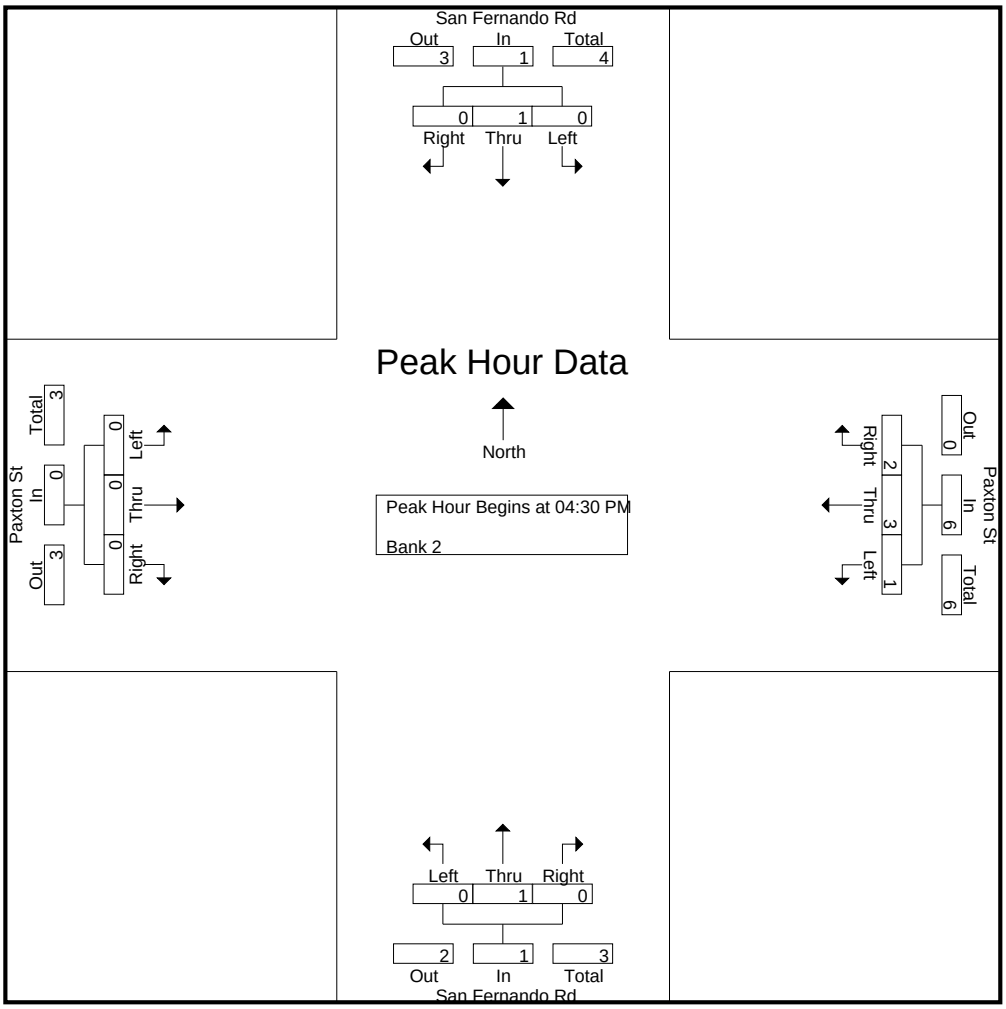

CITY TRAFFIC COUNTERS

626.991.7522

www.ctcounters.com

File Name : Paxton_SanFernando_Buses
Site Code : 00000000
Start Date : 3/25/2015
Page No : 1

Groups Printed- Bank 1

	San Fernando Rd Southbound			Paxton St Westbound			San Fernando Rd Northbound			Paxton St Eastbound			
Start Time	Left	Thru	Right	Left	Thru	Right	Left	Thru	Right	Left	Thru	Right	Int. Total
07:00 AM	0	1	0	1	3	1	0	1	0	1	0	0	8
07:15 AM	0	2	1	0	1	0	0	2	0	0	1	0	7
07:30 AM	0	1	1	0	1	0	0	1	0	0	0	0	4
07:45 AM	0	2	0	0	0	0	0	2	0	0	1	0	5
Total	0	6	2	1	5	1	0	6	0	1	2	0	24
08:00 AM	0	2	0	0	1	0	0	1	0	1	0	0	5
08:15 AM	0	2	0	0	0	0	0	2	0	2	1	0	7
08:30 AM	0	1	0	0	1	0	0	4	0	2	1	0	9
08:45 AM	0	2	0	0	0	0	0	5	0	2	1	0	10
Total	0	7	0	0	2	0	0	12	0	7	3	0	31
09:00 AM	0	1	1	0	0	0	0	5	1	3	1	0	12
09:15 AM	0	1	0	0	0	0	0	7	1	1	0	0	10
09:30 AM	0	1	1	0	1	0	0	0	0	2	1	0	6
09:45 AM	0	1	1	0	0	0	0	1	0	1	0	0	4
Total	0	4	3	0	1	0	0	13	2	7	2	0	32
12:00 PM	0	1	1	0	0	0	0	0	0	1	0	0	3
12:15 PM	0	2	0	0	0	0	0	1	0	0	0	0	3
12:30 PM	0	0	0	0	0	0	0	1	0	0	0	0	1
12:45 PM	0	3	0	0	1	0	0	0	0	0	1	1	6
Total	0	6	1	0	1	0	0	2	0	1	1	1	13
01:00 PM	0	1	0	0	0	0	0	1	0	0	0	1	3
01:15 PM	0	3	2	0	0	0	0	1	0	0	0	0	6
01:30 PM	0	4	2	0	1	0	0	2	0	0	0	0	9
01:45 PM	1	4	2	0	0	1	0	1	0	0	0	0	9
Total	1	12	6	0	1	1	0	5	0	0	0	1	27
03:00 PM	0	2	2	0	0	0	0	1	1	2	0	0	8
03:15 PM	0	3	0	0	0	0	0	2	0	3	1	1	10
03:30 PM	0	2	0	0	0	0	0	2	0	0	1	0	5
03:45 PM	0	4	1	0	0	1	0	2	0	3	0	0	11
Total	0	11	3	0	0	1	0	7	1	8	2	1	34
04:00 PM	0	2	0	0	2	1	0	2	0	3	2	0	12
04:15 PM	0	1	0	0	2	1	0	3	0	1	1	0	9
04:30 PM	0	3	0	1	1	1	0	3	0	2	0	0	11
04:45 PM	0	0	0	0	0	0	0	2	0	3	2	0	7
Total	0	6	0	1	5	3	0	10	0	9	5	0	39
05:00 PM	0	2	0	0	0	0	0	3	0	3	0	0	8
05:15 PM	0	0	0	0	0	0	0	1	0	6	0	1	8
05:30 PM	0	2	0	0	0	1	0	2	0	2	1	0	8
05:45 PM	0	1	0	0	1	0	0	4	0	1	1	0	8
Total	0	5	0	0	1	1	0	10	0	12	2	1	32
Grand Total	1	57	15	2	16	7	0	65	3	45	17	4	232
Apprch %	1.4	78.1	20.5	8	64	28	0	95.6	4.4	68.2	25.8	6.1	
Total %	0.4	24.6	6.5	0.9	6.9	3	0	28	1.3	19.4	7.3	1.7	

CITY TRAFFIC COUNTERS

626.991.7522

www.ctcounters.com

File Name : Paxton_SanFernando_Buses
Site Code : 00000000
Start Date : 3/25/2015
Page No : 2

	San Fernando Rd Southbound				Paxton St Westbound				San Fernando Rd Northbound				Paxton St Eastbound				
Start Time	Left	Thru	Right	App. Total	Left	Thru	Right	App. Total	Left	Thru	Right	App. Total	Left	Thru	Right	App. Total	Int. Total
Peak Hour Analysis From 07:00 AM to 09:45 AM - Peak 1 of 1																	
Peak Hour for Entire Intersection Begins at 08:30 AM																	
08:30 AM	0	1	0	1	0	**1**	0	**1**	0	4	0	4	2	**1**	0	3	9
08:45 AM	0	**2**	0	**2**	0	0	0	0	0	5	0	5	2	1	0	3	10
09:00 AM	0	1	**1**	2	0	0	0	0	0	5	**1**	6	**3**	1	0	**4**	**12**
09:15 AM	0	1	0	1	0	0	0	0	0	**7**	1	**8**	1	0	0	1	10
Total Volume	0	5	1	6	0	1	0	1	0	21	2	23	8	3	0	11	41
% App. Total	0	83.3	16.7		0	100	0		0	91.3	8.7		72.7	27.3	0		
PHF	.000	.625	.250	.750	.000	.250	.000	.250	.000	.750	.500	.719	.667	.750	.000	.688	.854

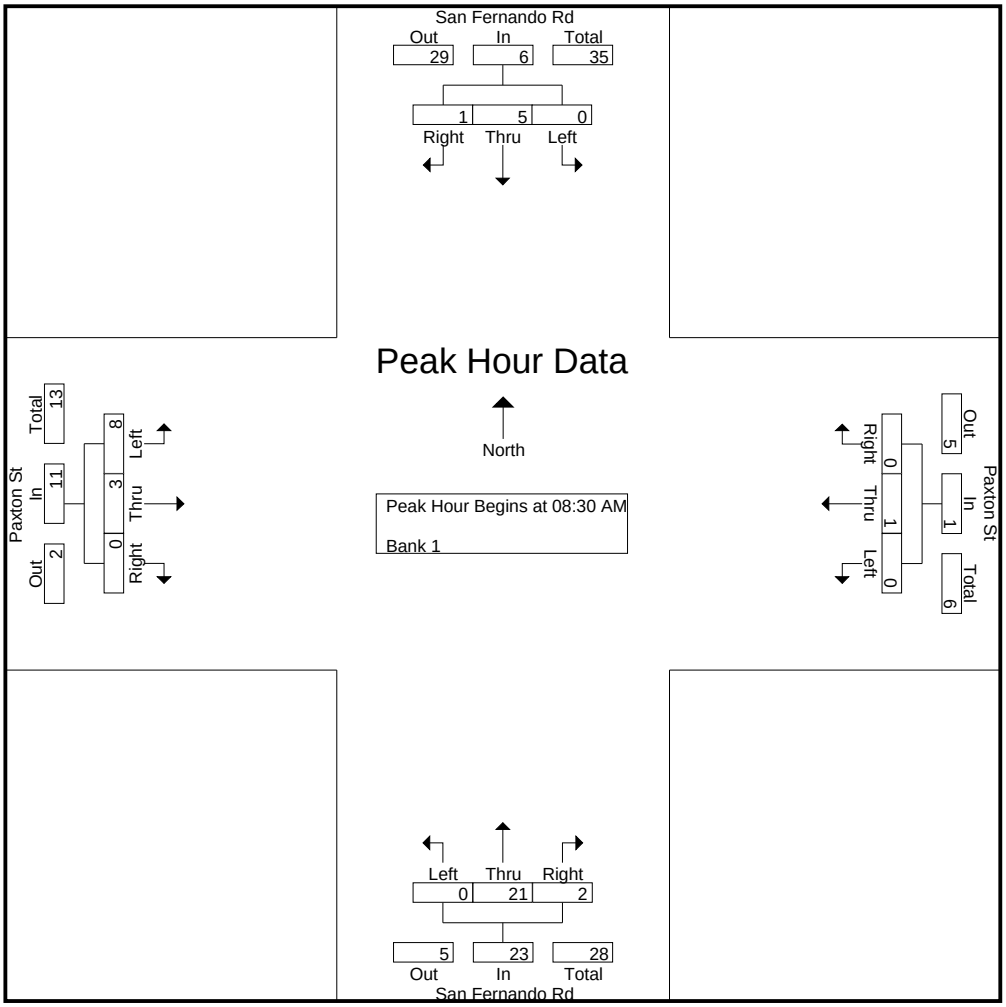

CITY TRAFFIC COUNTERS

626.991.7522

www.ctcounters.com

File Name : Paxton_SanFernando_Buses
Site Code : 00000000
Start Date : 3/25/2015
Page No : 3

	San Fernando Rd Southbound				Paxton St Westbound				San Fernando Rd Northbound				Paxton St Eastbound				
Start Time	Left	Thru	Right	App. Total	Left	Thru	Right	App. Total	Left	Thru	Right	App. Total	Left	Thru	Right	App. Total	Int. Total
Peak Hour Analysis From 10:00 AM to 01:45 PM - Peak 1 of 1																	
Peak Hour for Entire Intersection Begins at 01:00 PM																	
01:00 PM	0	1	0	1	0	0	0	0	0	1	0	1	0	0	**1**	**1**	3
01:15 PM	0	3	**2**	5	0	0	0	0	0	1	0	1	0	0	0	0	6
01:30 PM	0	**4**	2	6	0	**1**	0	**1**	0	**2**	0	**2**	0	0	0	0	**9**
01:45 PM	**1**	4	2	**7**	0	0	**1**	1	0	1	0	1	0	0	0	0	9
Total Volume	1	12	6	19	0	1	1	2	0	5	0	5	0	0	1	1	27
% App. Total	5.3	63.2	31.6		0	50	50		0	100	0		0	0	100		
PHF	.250	.750	.750	.679	.000	.250	.250	.500	.000	.625	.000	.625	.000	.000	.250	.250	.750

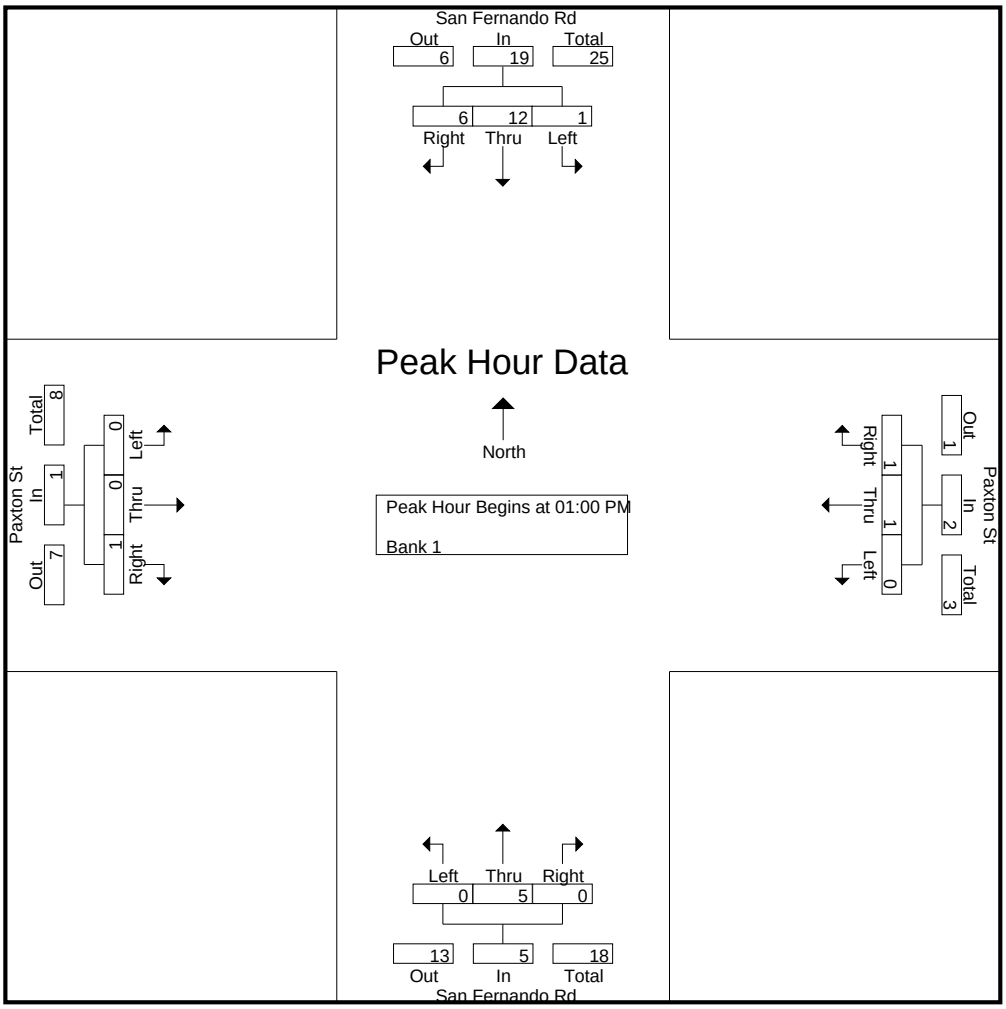

CITY TRAFFIC COUNTERS

626.991.7522

www.ctcounters.com

File Name : Paxton_SanFernando_Buses
Site Code : 00000000
Start Date : 3/25/2015
Page No : 4

	San Fernando Rd Southbound				Paxton St Westbound				San Fernando Rd Northbound				Paxton St Eastbound				
Start Time	Left	Thru	Right	App. Total	Left	Thru	Right	App. Total	Left	Thru	Right	App. Total	Left	Thru	Right	App. Total	Int. Total
Peak Hour Analysis From 02:00 PM to 05:45 PM - Peak 1 of 1																	
Peak Hour for Entire Intersection Begins at 03:45 PM																	
03:45 PM	0	**4**	**1**	**5**	0	0	**1**	1	0	2	0	2	**3**	0	0	3	11
04:00 PM	0	2	0	2	0	**2**	1	**3**	0	2	0	2	3	**2**	0	**5**	**12**
04:15 PM	0	1	0	1	0	2	1	3	0	**3**	0	**3**	1	1	0	2	9
04:30 PM	0	3	0	3	**1**	1	1	3	0	3	0	3	2	0	0	2	11
Total Volume	0	10	1	11	1	5	4	10	0	10	0	10	9	3	0	12	43
% App. Total	0	90.9	9.1		10	50	40		0	100	0		75	25	0		
PHF	.000	.625	.250	.550	.250	.625	1.00	.833	.000	.833	.000	.833	.750	.375	.000	.600	.896

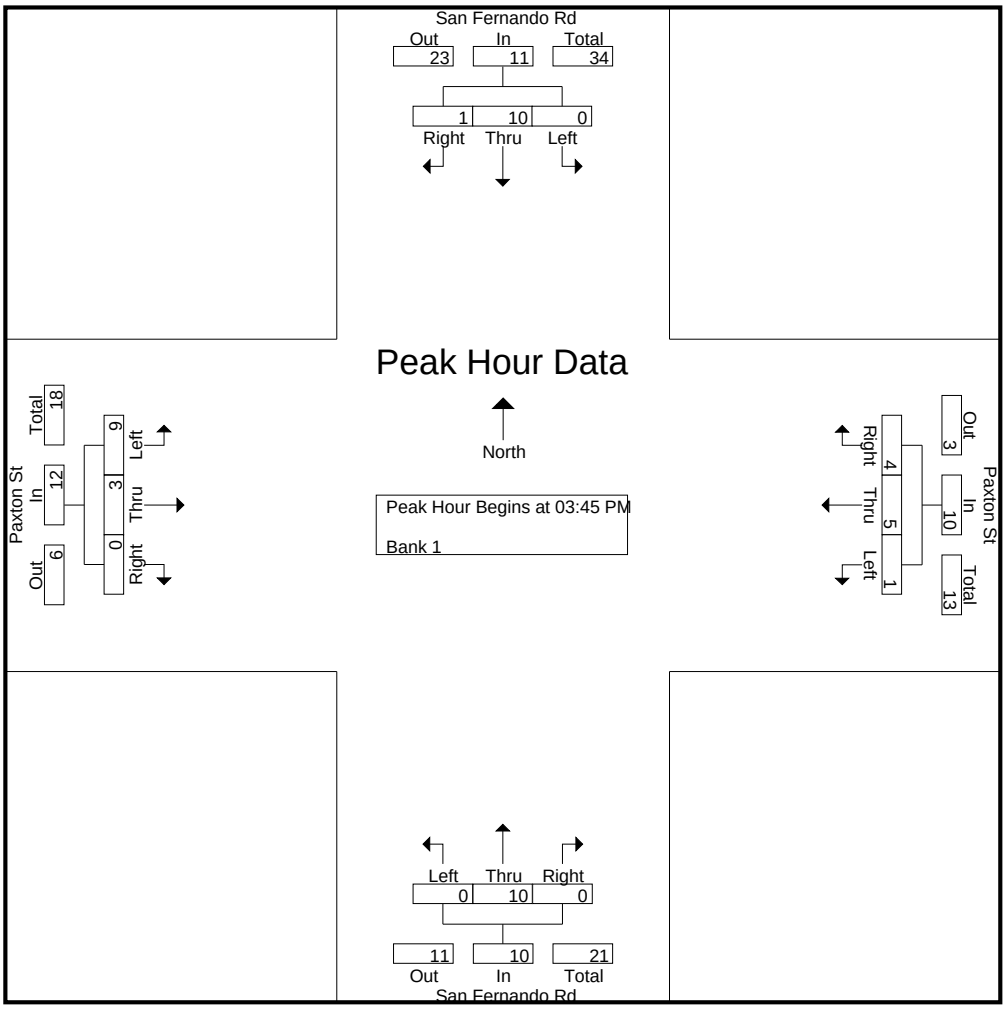

CITY TRAFFIC COUNTERS

626.991.7522

www.ctcounters.com

File Name : paxton_sanfernando_2axle
Site Code : 00000000
Start Date : 3/25/2015
Page No : 1

Groups Printed- Unshifted

	San Fernando Rd Southbound			Paxton St Westbound			San Fernando Rd Northbound			Paxton St Eastbound			
Start Time	Left	Thru	Right	Left	Thru	Right	Left	Thru	Right	Left	Thru	Right	Int. Total
07:00 AM	1	4	3	1	4	1	2	5	5	3	3	3	35
07:15 AM	0	7	3	0	4	3	0	6	3	1	3	4	34
07:30 AM	0	7	1	1	3	0	3	5	1	2	2	2	27
07:45 AM	1	5	1	0	2	4	2	3	2	1	1	2	24
Total	2	23	8	2	13	8	7	19	11	7	9	11	120
08:00 AM	1	9	2	2	1	0	0	4	1	3	3	1	27
08:15 AM	0	10	5	2	5	2	4	8	2	1	1	3	43
08:30 AM	0	6	5	3	2	2	1	6	0	2	2	4	33
08:45 AM	0	7	5	1	3	0	0	4	1	0	1	2	24
Total	1	32	17	8	11	4	5	22	4	6	7	10	127
09:00 AM	0	8	3	5	4	0	1	3	2	1	2	5	34
09:15 AM	0	15	4	5	4	1	1	5	1	1	2	1	40
09:30 AM	0	9	1	5	7	2	0	6	1	3	2	4	40
09:45 AM	0	11	3	2	4	0	1	4	3	0	1	1	30
Total	0	43	11	17	19	3	3	18	7	5	7	11	144
12:00 PM	1	7	7	1	0	0	0	7	2	0	1	5	31
12:15 PM	1	9	5	0	3	0	2	3	0	2	0	2	27
12:30 PM	1	5	4	2	4	0	1	4	3	2	1	4	31
12:45 PM	1	7	0	1	5	2	0	4	0	2	1	4	27
Total	4	28	16	4	12	2	3	18	5	6	3	15	116
01:00 PM	1	2	3	0	0	2	1	6	1	1	3	4	24
01:15 PM	1	3	4	0	1	0	3	6	1	0	2	3	24
01:30 PM	0	6	2	0	5	1	1	3	1	5	3	5	32
01:45 PM	0	6	8	1	2	1	1	6	1	3	3	5	37
Total	2	17	17	1	8	4	6	21	4	9	11	17	117
03:00 PM	0	7	4	0	1	0	1	4	4	1	2	3	27
03:15 PM	0	5	2	1	3	2	1	4	0	3	3	3	27
03:30 PM	0	7	4	1	0	0	1	6	3	0	2	3	27
03:45 PM	0	3	5	3	2	0	1	3	1	2	0	2	22
Total	0	22	15	5	6	2	4	17	8	6	7	11	103
04:00 PM	0	4	4	0	3	1	0	6	2	1	4	2	27
04:15 PM	0	7	5	0	1	0	1	4	2	1	2	2	25
04:30 PM	0	3	0	1	3	0	1	4	1	1	3	3	20
04:45 PM	0	11	2	1	3	0	0	6	1	0	4	1	29
Total	0	25	11	2	10	1	2	20	6	3	13	8	101
05:00 PM	0	5	2	2	2	0	1	1	1	1	0	1	16
05:15 PM	0	5	1	1	2	2	1	4	2	1	0	3	22
05:30 PM	0	6	3	0	0	0	0	4	1	0	0	2	16
05:45 PM	0	2	2	1	0	0	0	5	1	2	2	1	16
Total	0	18	8	4	4	2	2	14	5	4	2	7	70
Grand Total	9	208	103	43	83	26	32	149	50	46	59	90	898
Apprch %	2.8	65	32.2	28.3	54.6	17.1	13.9	64.5	21.6	23.6	30.3	46.2	
Total %	1	23.2	11.5	4.8	9.2	2.9	3.6	16.6	5.6	5.1	6.6	10	

CITY TRAFFIC COUNTERS

626.991.7522

www.ctcounters.com

File Name : paxton_sanfernando_2axle
Site Code : 00000000
Start Date : 3/25/2015
Page No : 2

	San Fernando Rd Southbound				Paxton St Westbound				San Fernando Rd Northbound				Paxton St Eastbound				
Start Time	Left	Thru	Right	App. Total	Left	Thru	Right	App. Total	Left	Thru	Right	App. Total	Left	Thru	Right	App. Total	Int. Total
Peak Hour Analysis From 07:00 AM to 09:45 AM - Peak 1 of 1																	
Peak Hour for Entire Intersection Begins at 09:00 AM																	
09:00 AM	0	8	3	11	**5**	4	0	9	**1**	3	2	6	1	**2**	**5**	8	34
09:15 AM	0	**15**	**4**	**19**	5	4	1	10	1	5	1	7	1	2	1	4	**40**
09:30 AM	0	9	1	10	5	**7**	**2**	**14**	0	**6**	1	7	**3**	2	4	**9**	40
09:45 AM	0	11	3	14	2	4	0	6	1	4	**3**	**8**	0	1	1	2	30
Total Volume	0	43	11	54	17	19	3	39	3	18	7	28	5	7	11	23	144
% App. Total	0	79.6	20.4		43.6	48.7	7.7		10.7	64.3	25		21.7	30.4	47.8		
PHF	.000	.717	.688	.711	.850	.679	.375	.696	.750	.750	.583	.875	.417	.875	.550	.639	.900

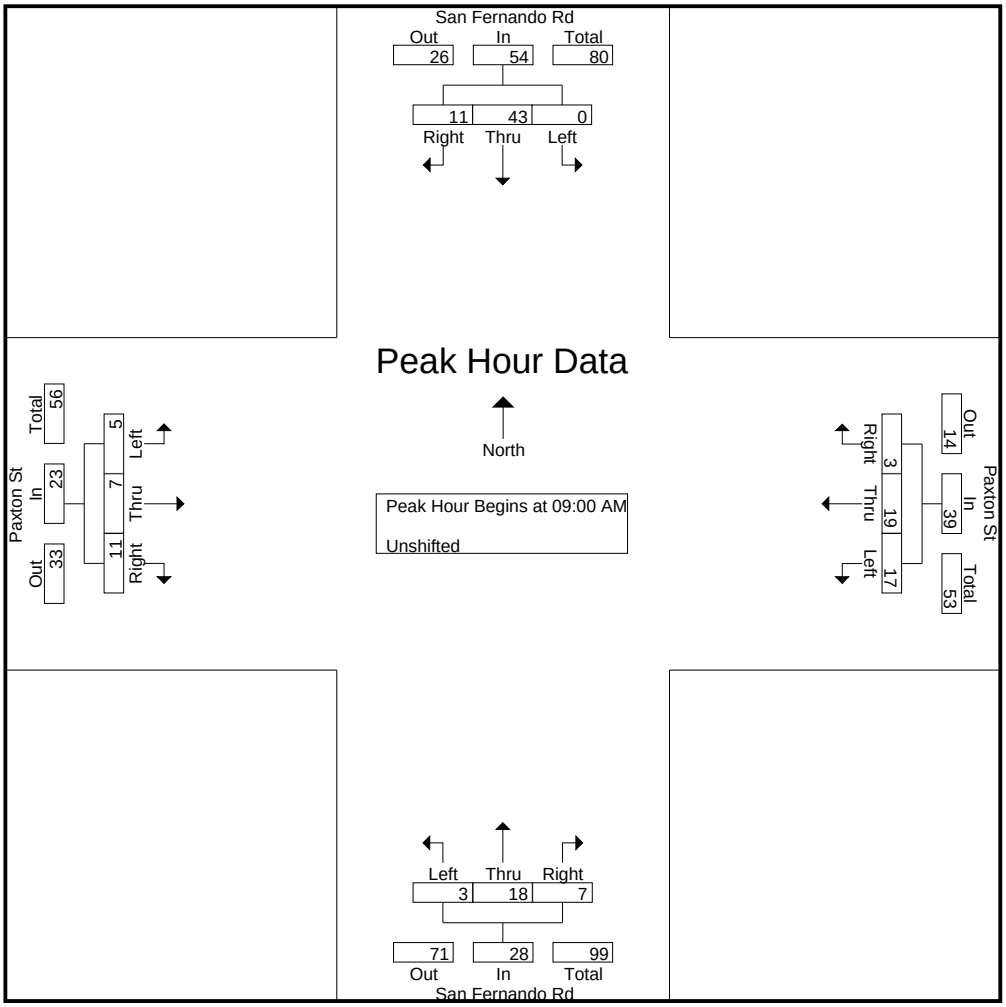

CITY TRAFFIC COUNTERS

626.991.7522

www.ctcounters.com

File Name : paxton_sanfernando_2axle
Site Code : 00000000
Start Date : 3/25/2015
Page No : 3

	San Fernando Rd Southbound				Paxton St Westbound				San Fernando Rd Northbound				Paxton St Eastbound				
Start Time	Left	Thru	Right	App. Total	Left	Thru	Right	App. Total	Left	Thru	Right	App. Total	Left	Thru	Right	App. Total	Int. Total
Peak Hour Analysis From 10:00 AM to 01:45 PM - Peak 1 of 1																	
Peak Hour for Entire Intersection Begins at 01:00 PM																	
01:00 PM	**1**	2	3	6	0	0	**2**	2	1	**6**	**1**	8	1	**3**	4	8	24
01:15 PM	1	3	4	8	0	1	0	1	**3**	6	1	**10**	0	2	3	5	24
01:30 PM	0	**6**	2	8	0	**5**	1	**6**	1	3	1	5	**5**	3	**5**	**13**	32
01:45 PM	0	6	**8**	**14**	**1**	2	1	4	1	6	1	8	3	3	5	11	**37**
Total Volume	2	17	17	36	1	8	4	13	6	21	4	31	9	11	17	37	117
% App. Total	5.6	47.2	47.2		7.7	61.5	30.8		19.4	67.7	12.9		24.3	29.7	45.9		
PHF	.500	.708	.531	.643	.250	.400	.500	.542	.500	.875	1.00	.775	.450	.917	.850	.712	.791

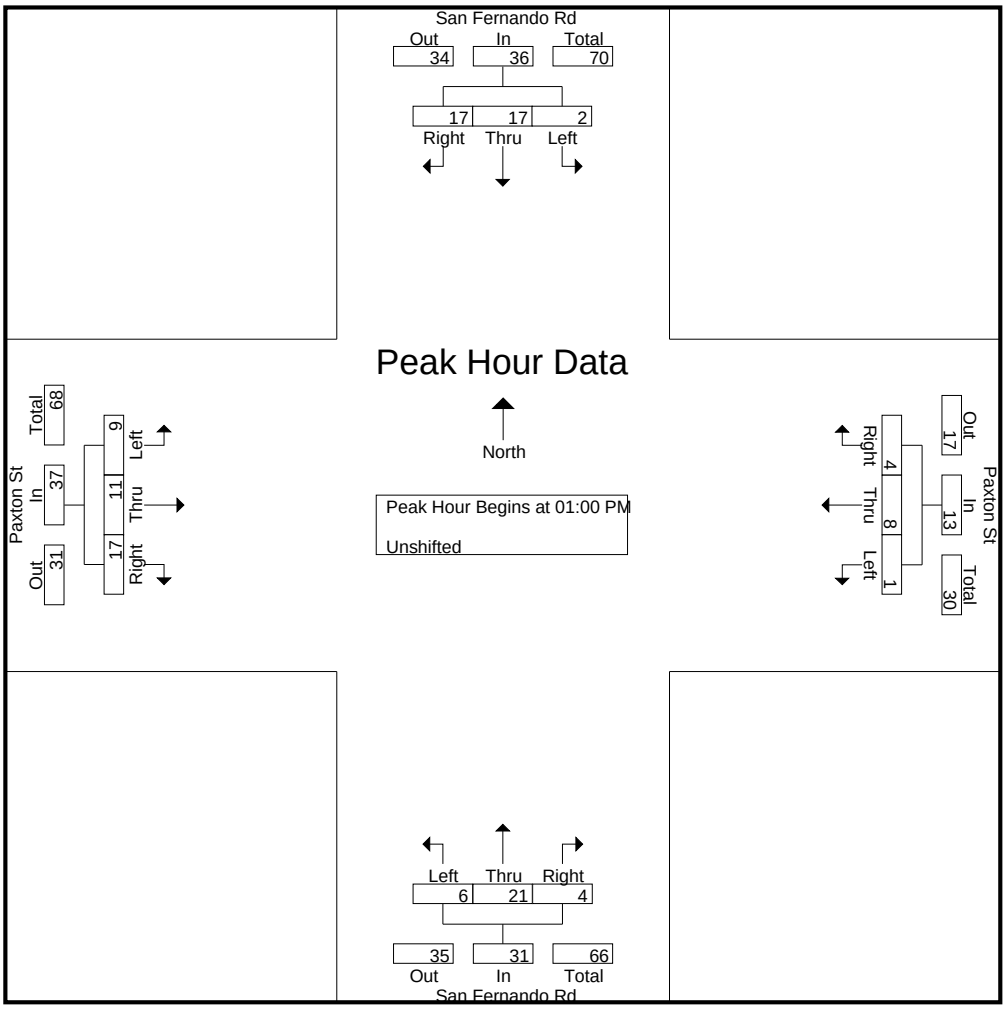

CITY TRAFFIC COUNTERS

626.991.7522

www.ctcounters.com

File Name : paxton_sanfernando_2axle
Site Code : 00000000
Start Date : 3/25/2015
Page No : 4

	San Fernando Rd Southbound				Paxton St Westbound				San Fernando Rd Northbound				Paxton St Eastbound				
Start Time	Left	Thru	Right	App. Total	Left	Thru	Right	App. Total	Left	Thru	Right	App. Total	Left	Thru	Right	App. Total	Int. Total
Peak Hour Analysis From 02:00 PM to 05:45 PM - Peak 1 of 1																	
Peak Hour for Entire Intersection Begins at 03:00 PM																	
03:00 PM	0	**7**	4	**11**	0	1	0	1	**1**	4	**4**	9	1	2	**3**	6	**27**
03:15 PM	0	5	2	7	1	**3**	**2**	**6**	1	4	0	5	**3**	**3**	3	**9**	27
03:30 PM	0	7	4	11	1	0	0	1	1	**6**	3	**10**	0	2	3	5	27
03:45 PM	0	3	**5**	8	**3**	2	0	5	1	3	1	5	2	0	2	4	22
Total Volume	0	22	15	37	5	6	2	13	4	17	8	29	6	7	11	24	103
% App. Total	0	59.5	40.5		38.5	46.2	15.4		13.8	58.6	27.6		25	29.2	45.8		
PHF	.000	.786	.750	.841	.417	.500	.250	.542	1.00	.708	.500	.725	.500	.583	.917	.667	.954

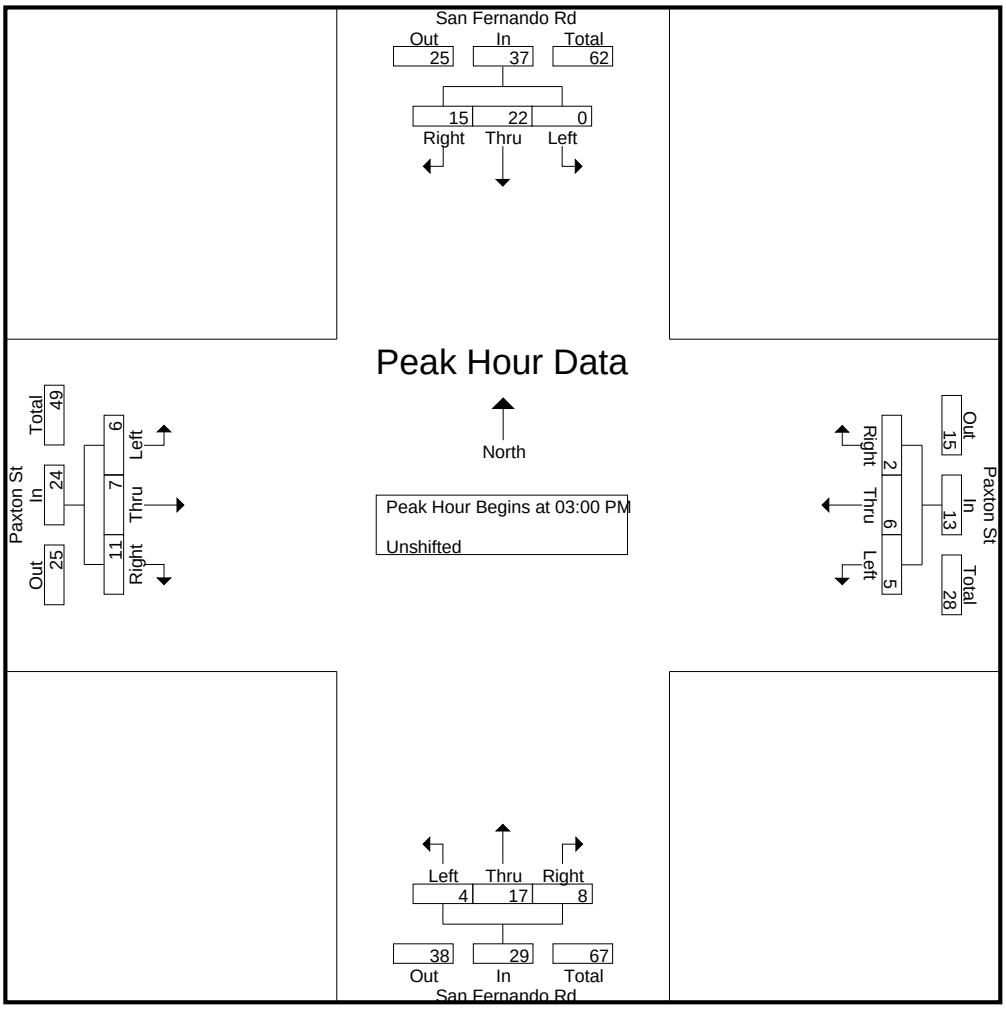

CITY TRAFFIC COUNTERS

626.991.7522

www.ctcounters.com

File Name : Paxton_SanFernando_3axle
Site Code : 00000000
Start Date : 3/25/2015
Page No : 1

Groups Printed- Bank 1

	San Fernando Rd Southbound			Paxton St Westbound			San Fernando Rd Northbound			Paxton St Eastbound			
Start Time	Left	Thru	Right	Left	Thru	Right	Left	Thru	Right	Left	Thru	Right	Int. Total
07:00 AM	0	0	0	0	0	1	0	0	0	1	1	2	5
07:15 AM	0	0	0	0	0	1	0	0	0	0	0	0	1
07:30 AM	0	0	0	0	0	0	0	2	0	0	0	0	2
07:45 AM	0	0	0	0	0	0	0	0	0	0	1	0	1
Total	0	0	0	0	0	2	0	2	0	1	2	2	9
08:00 AM	0	2	1	0	1	0	0	1	1	0	1	1	8
08:15 AM	0	1	0	0	2	0	0	0	0	0	0	1	4
08:30 AM	0	2	0	1	0	0	0	0	0	0	0	1	4
08:45 AM	0	1	0	0	1	0	0	1	1	0	0	0	4
Total	0	6	1	1	4	0	0	2	2	0	1	3	20
09:00 AM	0	1	0	0	0	1	0	0	0	2	2	0	6
09:15 AM	0	2	1	0	0	0	0	0	0	0	1	1	5
09:30 AM	0	1	1	0	0	0	0	1	0	0	1	1	5
09:45 AM	0	0	0	0	1	0	0	0	1	0	0	1	3
Total	0	4	2	0	1	1	0	1	1	2	4	3	19
12:00 PM	0	1	2	0	0	0	0	1	1	0	0	1	6
12:15 PM	0	3	2	0	0	0	1	2	1	0	0	0	9
12:30 PM	0	2	0	1	1	0	0	2	0	0	0	2	8
12:45 PM	0	1	1	1	0	0	1	1	0	1	0	1	7
Total	0	7	5	2	1	0	2	6	2	1	0	4	30
01:00 PM	0	3	1	0	0	2	1	2	1	1	0	2	13
01:15 PM	0	0	1	1	1	0	0	1	0	1	1	0	6
01:30 PM	0	0	1	0	2	0	0	0	0	0	1	2	6
01:45 PM	0	1	2	0	0	0	0	2	1	1	0	0	7
Total	0	4	5	1	3	2	1	5	2	3	2	4	32
03:00 PM	0	0	2	0	0	0	2	0	0	0	0	2	6
03:15 PM	0	3	0	0	0	0	0	2	1	1	0	0	7
03:30 PM	0	0	1	0	0	0	1	1	0	1	0	0	4
03:45 PM	0	0	0	0	1	0	0	0	0	0	0	0	1
Total	0	3	3	0	1	0	3	3	1	2	0	2	18
04:00 PM	0	1	0	0	0	0	0	0	0	0	0	0	1
04:15 PM	0	1	0	0	0	0	1	2	0	0	0	0	4
04:30 PM	0	1	1	0	1	0	0	0	0	0	0	0	3
04:45 PM	0	0	0	0	1	0	0	1	0	0	0	1	3
Total	0	3	1	0	2	0	1	3	0	0	0	1	11
05:00 PM	0	0	0	0	0	0	0	0	0	0	0	1	1
05:15 PM	0	0	0	0	0	0	1	0	0	0	0	0	1
05:30 PM	0	1	0	0	0	0	0	1	0	1	0	0	3
Total	0	1	0	0	0	0	1	1	0	1	0	1	5
Grand Total	0	28	17	4	12	5	8	23	8	10	9	20	144
Apprch %	0	62.2	37.8	19	57.1	23.8	20.5	59	20.5	25.6	23.1	51.3	
Total %	0	19.4	11.8	2.8	8.3	3.5	5.6	16	5.6	6.9	6.2	13.9	

CITY TRAFFIC COUNTERS

626.991.7522

www.ctcounters.com

File Name : Paxton_SanFernando_3axle
Site Code : 00000000
Start Date : 3/25/2015
Page No : 2

	San Fernando Rd Southbound				Paxton St Westbound				San Fernando Rd Northbound				Paxton St Eastbound				
Start Time	Left	Thru	Right	App. Total	Left	Thru	Right	App. Total	Left	Thru	Right	App. Total	Left	Thru	Right	App. Total	Int. Total
Peak Hour Analysis From 07:00 AM to 09:45 AM - Peak 1 of 1																	
Peak Hour for Entire Intersection Begins at 08:00 AM																	
08:00 AM	0	**2**	**1**	**3**	0	1	0	1	0	**1**	**1**	**2**	0	**1**	**1**	**2**	**8**
08:15 AM	0	1	0	1	0	**2**	0	**2**	0	0	0	0	0	0	1	1	4
08:30 AM	0	2	0	2	**1**	0	0	1	0	0	0	0	0	0	1	1	4
08:45 AM	0	1	0	1	0	1	0	1	0	1	1	2	0	0	0	0	4
Total Volume	0	6	1	7	1	4	0	5	0	2	2	4	0	1	3	4	20
% App. Total	0	85.7	14.3		20	80	0		0	50	50		0	25	75		
PHF	.000	.750	.250	.583	.250	.500	.000	.625	.000	.500	.500	.500	.000	.250	.750	.500	.625

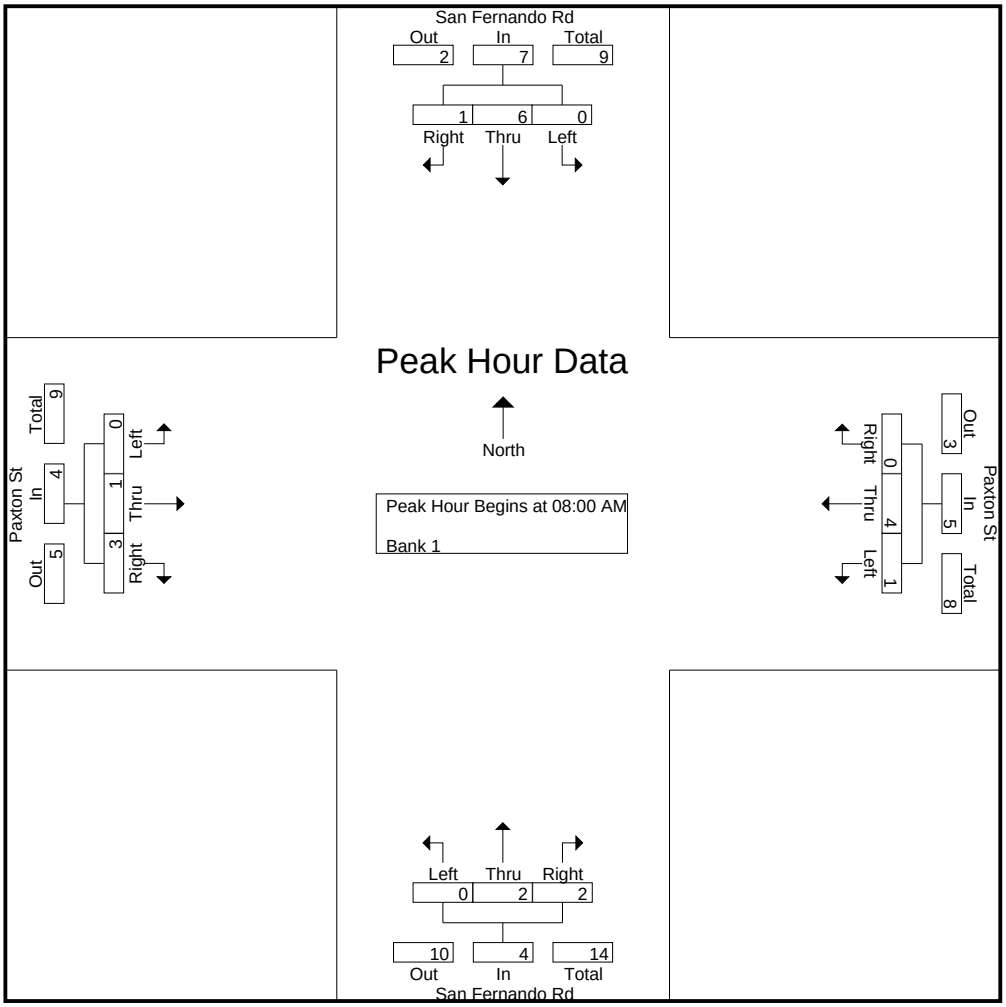

CITY TRAFFIC COUNTERS

626.991.7522

www.ctcounters.com

File Name : Paxton_SanFernando_3axle
Site Code : 00000000
Start Date : 3/25/2015
Page No : 3

	San Fernando Rd Southbound				Paxton St Westbound				San Fernando Rd Northbound				Paxton St Eastbound				
Start Time	Left	Thru	Right	App. Total	Left	Thru	Right	App. Total	Left	Thru	Right	App. Total	Left	Thru	Right	App. Total	Int. Total
Peak Hour Analysis From 10:00 AM to 01:45 PM - Peak 1 of 1																	
Peak Hour for Entire Intersection Begins at 12:15 PM																	
12:15 PM	0	**3**	**2**	**5**	0	0	0	0	**1**	**2**	**1**	**4**	0	0	0	0	9
12:30 PM	0	2	0	2	**1**	**1**	0	**2**	0	2	0	2	0	0	**2**	2	8
12:45 PM	0	1	1	2	1	0	0	1	1	1	0	2	**1**	0	1	2	7
01:00 PM	0	3	1	4	0	0	**2**	2	1	2	1	4	1	0	2	**3**	**13**
Total Volume	0	9	4	13	2	1	2	5	3	7	2	12	2	0	5	7	37
% App. Total	0	69.2	30.8		40	20	40		25	58.3	16.7		28.6	0	71.4		
PHF	.000	.750	.500	.650	.500	.250	.250	.625	.750	.875	.500	.750	.500	.000	.625	.583	.712

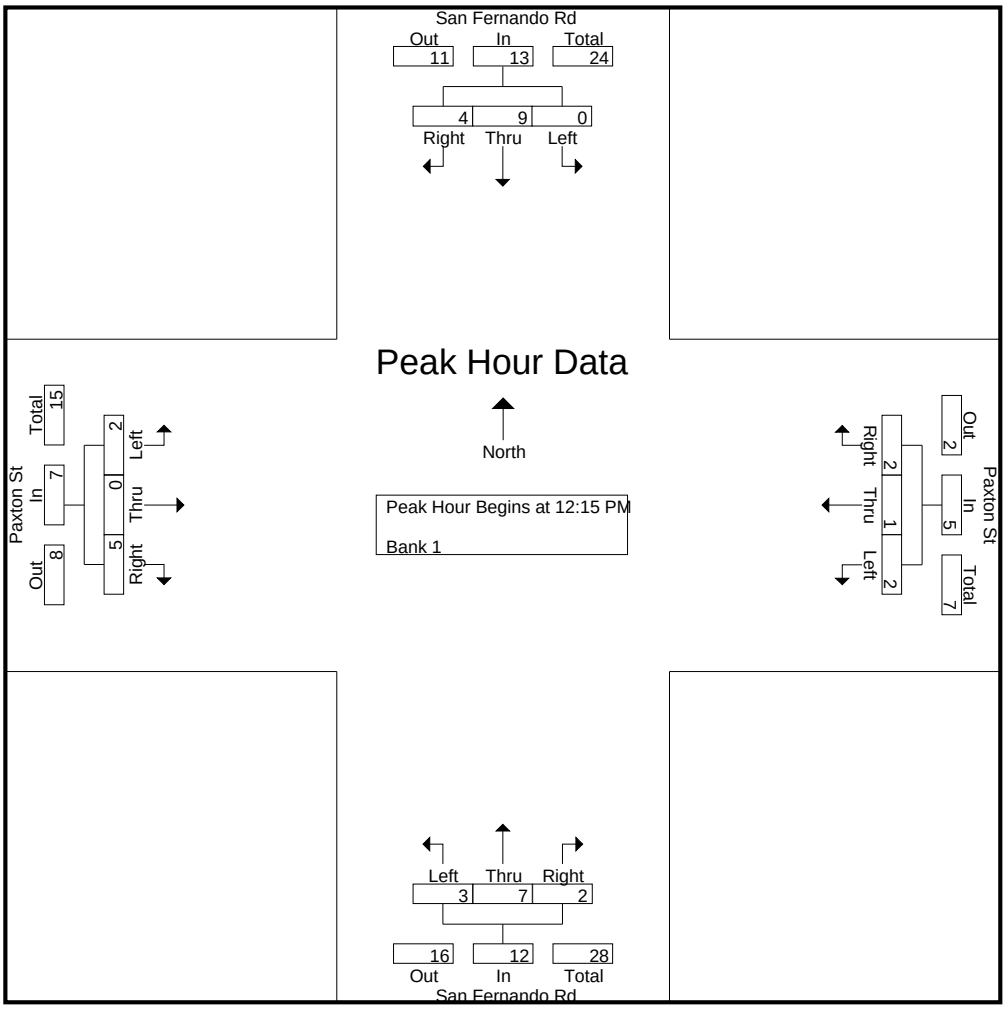

CITY TRAFFIC COUNTERS

626.991.7522

www.ctcounters.com

File Name : Paxton_SanFernando_3axle
Site Code : 00000000
Start Date : 3/25/2015
Page No : 4

	San Fernando Rd Southbound				Paxton St Westbound				San Fernando Rd Northbound				Paxton St Eastbound				
Start Time	Left	Thru	Right	App. Total	Left	Thru	Right	App. Total	Left	Thru	Right	App. Total	Left	Thru	Right	App. Total	Int. Total
Peak Hour Analysis From 02:00 PM to 05:45 PM - Peak 1 of 1																	
Peak Hour for Entire Intersection Begins at 03:00 PM																	
03:00 PM	0	0	**2**	2	0	0	0	0	**2**	0	0	2	0	0	**2**	**2**	6
03:15 PM	0	**3**	0	**3**	0	0	0	0	0	**2**	**1**	**3**	**1**	0	0	1	**7**
03:30 PM	0	0	1	1	0	0	0	0	1	1	0	2	1	0	0	1	4
03:45 PM	0	0	0	0	0	**1**	0	**1**	0	0	0	0	0	0	0	0	1
Total Volume	0	3	3	6	0	1	0	1	3	3	1	7	2	0	2	4	18
% App. Total	0	50	50		0	100	0		42.9	42.9	14.3		50	0	50		
PHF	.000	.250	.375	.500	.000	.250	.000	.250	.375	.375	.250	.583	.500	.000	.250	.500	.643

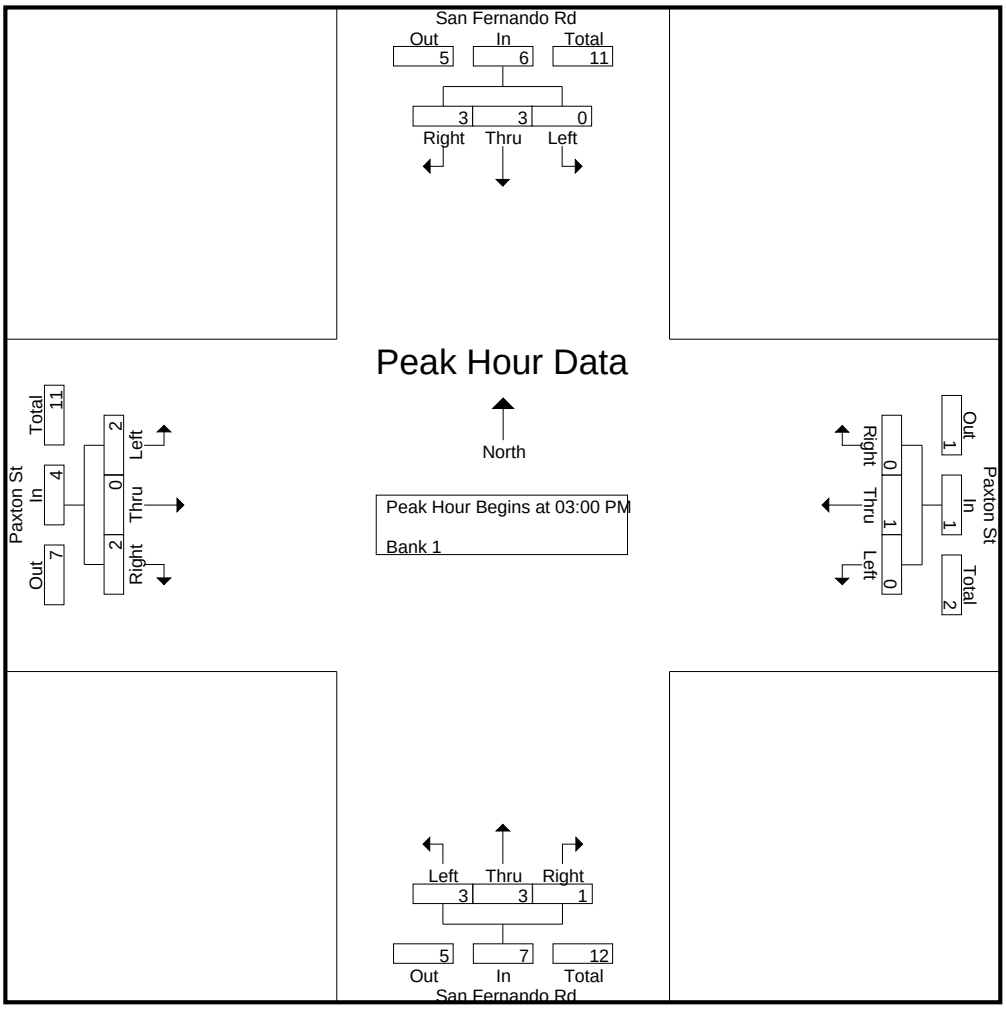

CITY TRAFFIC COUNTERS

626.991.7522

www.ctcounters.com

File Name : Paxton_SanFernando_4axle
Site Code : 00000000
Start Date : 3/25/2015
Page No : 1

Groups Printed- Bank 2

	San Fernando Rd Southbound			Paxton St Westbound			San Fernando Rd Northbound			Paxton St Eastbound			
Start Time	Left	Thru	Right	Left	Thru	Right	Left	Thru	Right	Left	Thru	Right	Int. Total
07:00 AM	0	0	1	0	0	0	0	0	0	0	0	0	1
07:45 AM	0	0	0	0	0	0	0	0	0	0	0	1	1
Total	0	0	1	0	0	0	0	0	0	0	0	1	2
08:15 AM	0	0	1	0	0	0	0	0	0	0	0	1	2
08:45 AM	0	0	0	0	0	0	0	0	0	0	0	1	1
Total	0	0	1	0	0	0	0	0	0	0	0	2	3
09:30 AM	0	0	0	0	0	0	0	1	0	0	0	1	2
Total	0	0	0	0	0	0	0	1	0	0	0	1	2
12:00 PM	0	0	0	0	0	0	0	1	0	0	0	0	1
12:15 PM	0	1	0	0	0	0	0	0	0	0	0	1	2
12:30 PM	0	0	0	0	0	0	0	0	0	0	0	1	1
Total	0	1	0	0	0	0	0	1	0	0	0	2	4
01:15 PM	0	1	0	0	0	0	0	0	0	0	0	0	1
01:30 PM	0	0	0	0	1	0	0	1	0	1	0	0	3
01:45 PM	0	1	2	0	0	0	1	1	0	1	0	1	7
Total	0	2	2	0	1	0	1	2	0	2	0	1	11
03:30 PM	0	0	1	0	0	0	1	0	0	0	0	0	2
03:45 PM	0	0	0	0	1	0	0	0	0	0	0	1	2
Total	0	0	1	0	1	0	1	0	0	0	0	1	4
04:00 PM	0	1	2	0	0	0	1	0	0	0	0	0	4
04:15 PM	0	0	0	0	1	0	0	0	0	0	0	1	2
04:30 PM	0	0	1	0	1	0	1	0	0	0	0	0	3
04:45 PM	0	0	0	0	0	0	1	0	0	0	0	0	1
Total	0	1	3	0	2	0	3	0	0	0	0	1	10
05:00 PM	0	1	0	0	1	0	0	0	0	0	0	0	2
05:15 PM	0	0	0	0	0	0	1	0	0	0	0	0	1
05:45 PM	0	0	0	0	1	0	0	0	0	0	0	0	1
Total	0	1	0	0	2	0	1	0	0	0	0	0	4
Grand Total	0	5	8	0	6	0	6	4	0	2	0	9	40
Apprch %	0	38.5	61.5	0	100	0	60	40	0	18.2	0	81.8	
Total %	0	12.5	20	0	15	0	15	10	0	5	0	22.5	

CITY TRAFFIC COUNTERS

626.991.7522

www.ctcounters.com

File Name : Paxton_SanFernando_4axle
Site Code : 00000000
Start Date : 3/25/2015
Page No : 2

	San Fernando Rd Southbound				Paxton St Westbound				San Fernando Rd Northbound				Paxton St Eastbound				
Start Time	Left	Thru	Right	App. Total	Left	Thru	Right	App. Total	Left	Thru	Right	App. Total	Left	Thru	Right	App. Total	Int. Total
Peak Hour Analysis From 07:00 AM to 09:45 AM - Peak 1 of 1																	
Peak Hour for Entire Intersection Begins at 07:30 AM																	
07:30 AM	0	0	0	0	0	0	0	0	0	0	0	0	0	0	0	0	0
07:45 AM	0	0	0	0	0	0	0	0	0	0	0	0	0	0	**1**	**1**	1
08:00 AM	0	0	0	0	0	0	0	0	0	0	0	0	0	0	0	0	0
08:15 AM	0	0	**1**	**1**	0	0	0	0	0	0	0	0	0	0	1	1	**2**
Total Volume	0	0	1	1	0	0	0	0	0	0	0	0	0	0	2	2	3
% App. Total	0	0	100		0	0	0		0	0	0		0	0	100		
PHF	.000	.000	.250	.250	.000	.000	.000	.000	.000	.000	.000	.000	.000	.000	.500	.500	.375

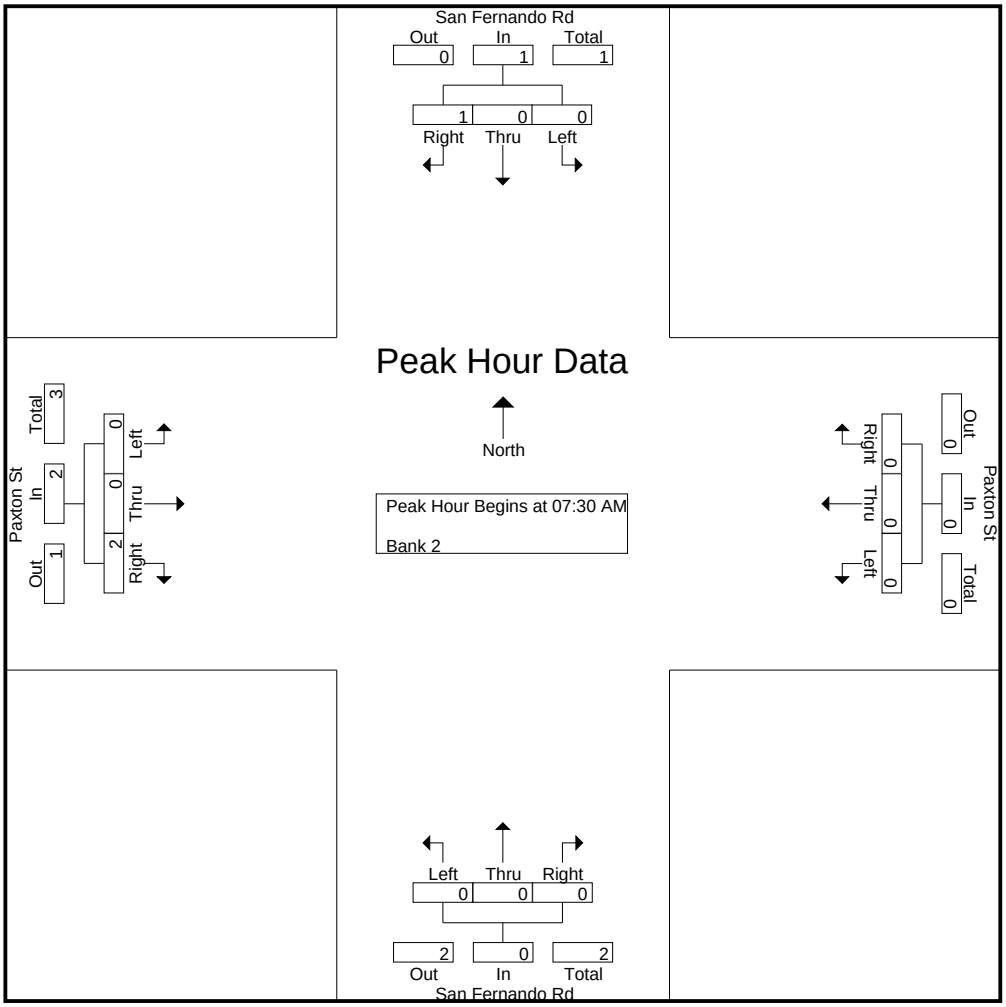

CITY TRAFFIC COUNTERS

626.991.7522

www.ctcounters.com

File Name : Paxton_SanFernando_4axle
Site Code : 00000000
Start Date : 3/25/2015
Page No : 3

	San Fernando Rd Southbound				Paxton St Westbound				San Fernando Rd Northbound				Paxton St Eastbound				
Start Time	Left	Thru	Right	App. Total	Left	Thru	Right	App. Total	Left	Thru	Right	App. Total	Left	Thru	Right	App. Total	Int. Total
Peak Hour Analysis From 10:00 AM to 01:45 PM - Peak 1 of 1																	
Peak Hour for Entire Intersection Begins at 01:00 PM																	
01:00 PM	0	0	0	0	0	0	0	0	0	0	0	0	0	0	0	0	0
01:15 PM	0	**1**	0	1	0	0	0	0	0	0	0	0	0	0	0	0	1
01:30 PM	0	0	0	0	0	**1**	0	**1**	0	**1**	0	1	**1**	0	0	1	3
01:45 PM	0	1	**2**	**3**	0	0	0	0	**1**	1	0	**2**	1	0	**1**	**2**	**7**
Total Volume	0	2	2	4	0	1	0	1	1	2	0	3	2	0	1	3	11
% App. Total	0	50	50		0	100	0		33.3	66.7	0		66.7	0	33.3		
PHF	.000	.500	.250	.333	.000	.250	.000	.250	.250	.500	.000	.375	.500	.000	.250	.375	.393

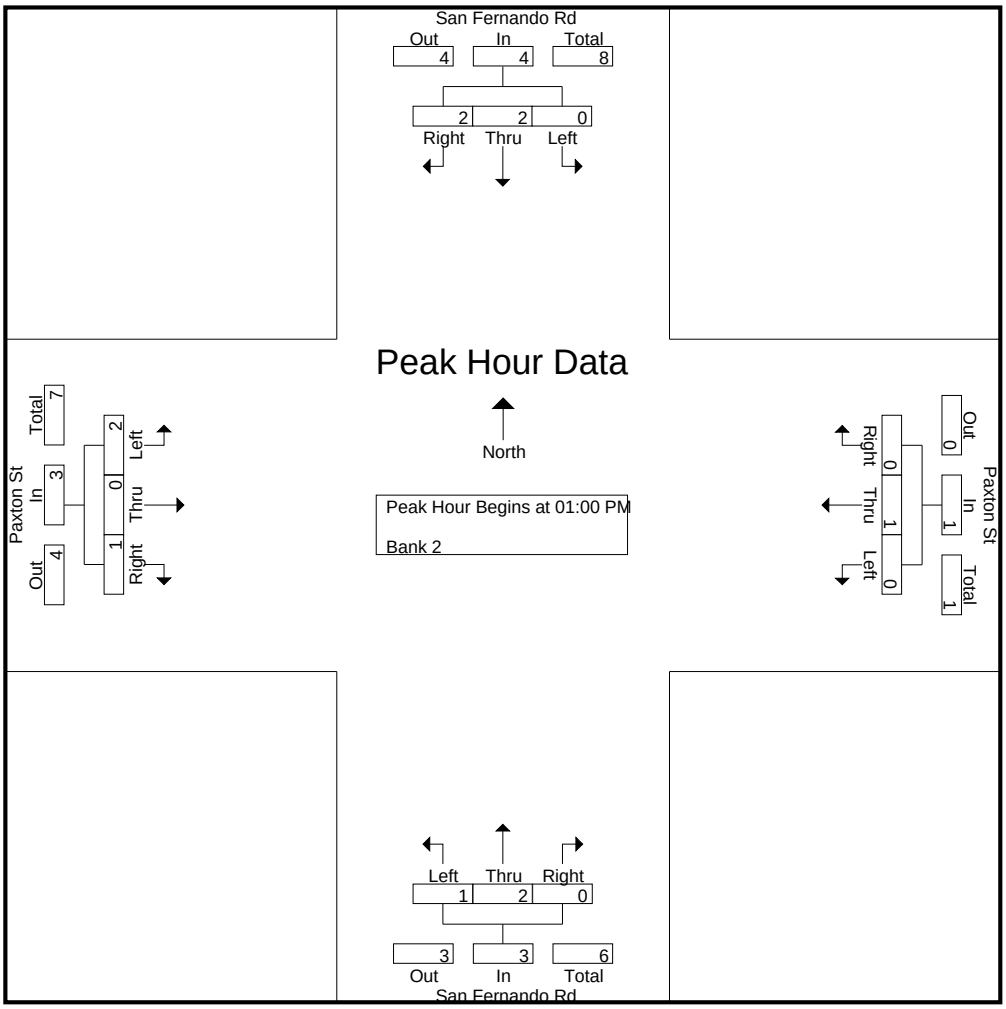

CITY TRAFFIC COUNTERS

626.991.7522

www.ctcounters.com

File Name : Paxton_SanFernando_4axle
Site Code : 00000000
Start Date : 3/25/2015
Page No : 4

	San Fernando Rd Southbound				Paxton St Westbound				San Fernando Rd Northbound				Paxton St Eastbound				
Start Time	Left	Thru	Right	App. Total	Left	Thru	Right	App. Total	Left	Thru	Right	App. Total	Left	Thru	Right	App. Total	Int. Total
Peak Hour Analysis From 02:00 PM to 05:45 PM - Peak 1 of 1																	
Peak Hour for Entire Intersection Begins at 03:45 PM																	
03:45 PM	0	0	0	0	0	**1**	0	**1**	0	0	0	0	0	0	**1**	**1**	2
04:00 PM	0	**1**	**2**	**3**	0	0	0	0	**1**	0	0	**1**	0	0	0	0	**4**
04:15 PM	0	0	0	0	0	1	0	1	0	0	0	0	0	0	1	1	2
04:30 PM	0	0	1	1	0	1	0	1	1	0	0	1	0	0	0	0	3
Total Volume	0	1	3	4	0	3	0	3	2	0	0	2	0	0	2	2	11
% App. Total	0	25	75		0	100	0		100	0	0		0	0	100		
PHF	.000	.250	.375	.333	.000	.750	.000	.750	.500	.000	.000	.500	.000	.000	.500	.500	.688

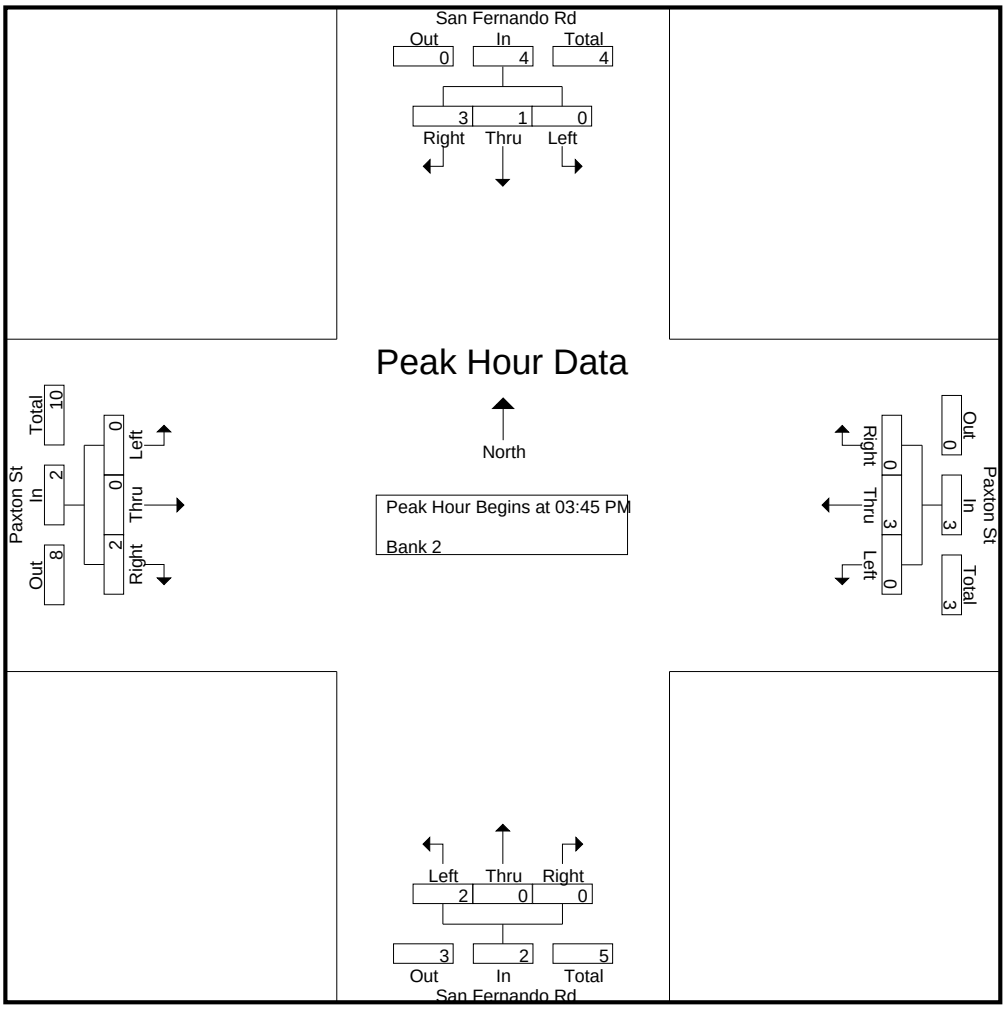

CITY TRAFFIC COUNTERS

626.991.7522

www.ctcounters.com

File Name : Paxton_SanFernando_5axle
Site Code : 00000000
Start Date : 3/25/2015
Page No : 1

Groups Printed- Unshifted

	San Fernando Rd Southbound			Paxton St Westbound			San Fernando Rd Northbound			Paxton St Eastbound			
Start Time	Left	Thru	Right	Left	Thru	Right	Left	Thru	Right	Left	Thru	Right	Int. Total
07:00 AM	0	0	0	0	0	3	0	3	0	1	0	1	8
07:15 AM	0	0	0	0	0	0	1	2	0	0	1	1	5
07:30 AM	0	2	0	0	0	0	0	0	0	0	0	1	3
07:45 AM	0	0	0	0	0	0	0	3	0	0	0	2	5
Total	0	2	0	0	0	3	1	8	0	1	1	5	21
08:00 AM	0	4	0	0	0	0	0	2	0	0	1	0	7
08:15 AM	0	1	2	0	0	0	0	1	0	1	0	0	5
08:30 AM	0	1	1	0	0	0	0	1	0	0	0	0	3
08:45 AM	0	1	1	0	0	1	0	1	0	1	0	2	7
Total	0	7	4	0	0	1	0	5	0	2	1	2	22
09:00 AM	0	0	2	0	1	1	0	3	0	0	0	0	7
09:15 AM	0	2	2	0	0	0	0	1	2	0	0	0	7
09:30 AM	0	1	1	0	0	0	0	0	0	1	0	0	3
09:45 AM	0	2	0	0	0	0	0	0	0	0	0	2	4
Total	0	5	5	0	1	1	0	4	2	1	0	2	21
12:00 PM	0	1	1	0	0	0	0	1	0	0	0	1	4
12:15 PM	0	0	1	0	0	0	0	1	0	0	1	0	3
12:30 PM	0	1	0	0	0	0	1	0	0	0	0	1	3
12:45 PM	0	1	1	0	1	0	0	1	0	0	0	2	6
Total	0	3	3	0	1	0	1	3	0	0	1	4	16
01:00 PM	0	1	5	0	0	0	0	1	1	0	0	0	8
01:15 PM	0	2	1	0	0	0	0	1	0	0	0	1	5
01:30 PM	0	1	3	0	2	0	1	1	0	0	0	0	8
01:45 PM	0	3	1	0	0	0	0	2	0	0	1	1	8
Total	0	7	10	0	2	0	1	5	1	0	1	2	29
03:00 PM	1	1	0	0	0	0	0	2	0	0	0	0	4
03:15 PM	0	0	0	0	0	0	0	0	1	1	0	0	2
03:30 PM	0	0	0	0	0	0	0	1	0	0	0	0	1
03:45 PM	0	0	0	0	1	0	0	1	0	0	2	2	6
Total	1	1	0	0	1	0	0	4	1	1	2	2	13
04:00 PM	1	0	0	1	0	0	0	0	0	0	0	0	2
04:15 PM	0	1	0	0	2	0	0	0	1	0	0	0	4
04:30 PM	0	0	0	0	0	0	0	0	1	0	1	0	2
04:45 PM	0	1	0	0	0	0	0	0	0	0	0	0	1
Total	1	2	0	1	2	0	0	0	2	0	1	0	9
05:00 PM	0	1	0	0	0	0	0	0	0	0	0	0	1
05:15 PM	0	0	0	0	1	0	0	0	0	0	0	0	1
05:45 PM	0	0	0	0	0	0	0	0	1	0	0	0	1
Total	0	1	0	0	1	0	0	0	1	0	0	0	3
Grand Total	2	28	22	1	8	5	3	29	7	5	7	17	134
Apprch %	3.8	53.8	42.3	7.1	57.1	35.7	7.7	74.4	17.9	17.2	24.1	58.6	
Total %	1.5	20.9	16.4	0.7	6	3.7	2.2	21.6	5.2	3.7	5.2	12.7	

CITY TRAFFIC COUNTERS

626.991.7522

www.ctcounters.com

File Name : Paxton_SanFernando_5axle
Site Code : 00000000
Start Date : 3/25/2015
Page No : 2

	San Fernando Rd Southbound				Paxton St Westbound				San Fernando Rd Northbound				Paxton St Eastbound				
Start Time	Left	Thru	Right	App. Total	Left	Thru	Right	App. Total	Left	Thru	Right	App. Total	Left	Thru	Right	App. Total	Int. Total
Peak Hour Analysis From 07:00 AM to 09:45 AM - Peak 1 of 1																	
Peak Hour for Entire Intersection Begins at 08:30 AM																	
08:30 AM	0	1	1	2	0	0	0	0	0	1	0	1	0	0	0	0	3
08:45 AM	0	1	1	2	0	0	**1**	1	0	1	0	1	**1**	0	**2**	**3**	**7**
09:00 AM	0	0	**2**	2	0	**1**	1	**2**	0	**3**	0	**3**	0	0	0	0	7
09:15 AM	0	**2**	2	**4**	0	0	0	0	0	1	**2**	3	0	0	0	0	7
Total Volume	0	4	6	10	0	1	2	3	0	6	2	8	1	0	2	3	24
% App. Total	0	40	60		0	33.3	66.7		0	75	25		33.3	0	66.7		
PHF	.000	.500	.750	.625	.000	.250	.500	.375	.000	.500	.250	.667	.250	.000	.250	.250	.857

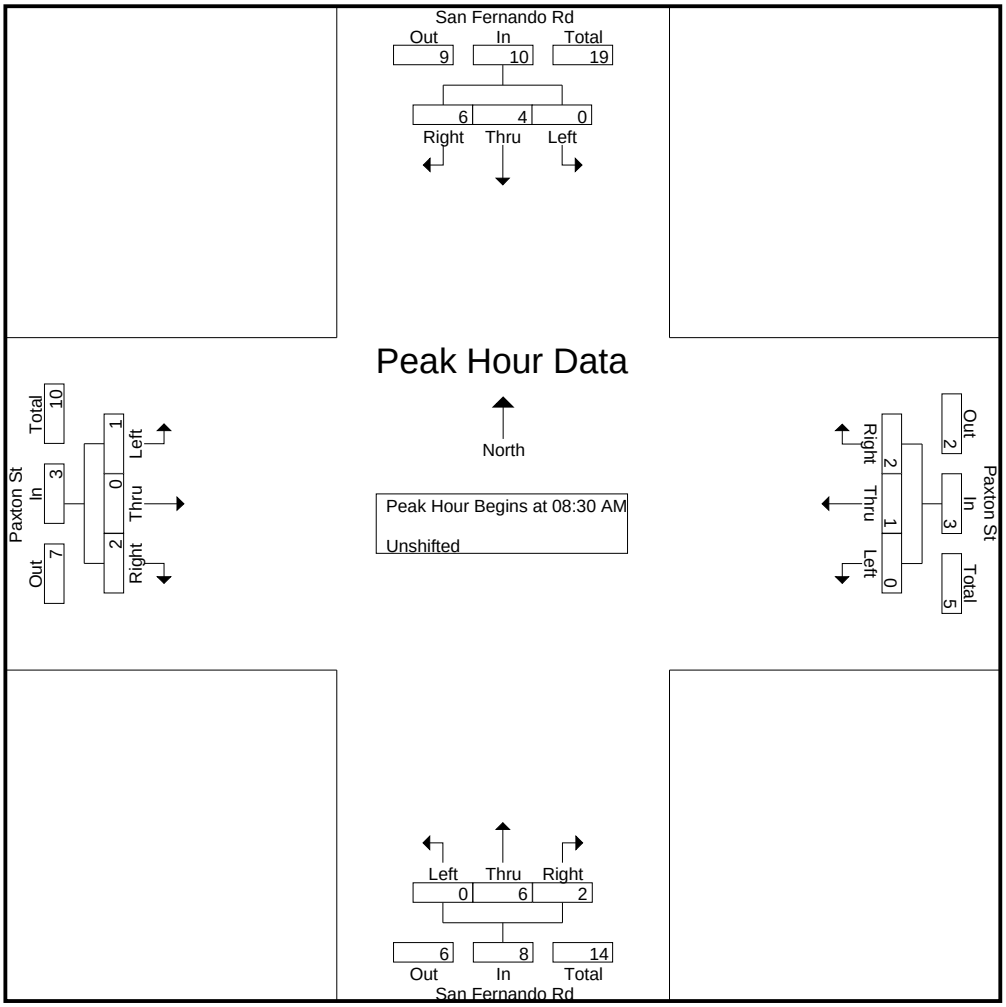

CITY TRAFFIC COUNTERS

626.991.7522

www.ctcounters.com

File Name : Paxton_SanFernando_5axle
Site Code : 00000000
Start Date : 3/25/2015
Page No : 3

	San Fernando Rd Southbound				Paxton St Westbound				San Fernando Rd Northbound				Paxton St Eastbound				
Start Time	Left	Thru	Right	App. Total	Left	Thru	Right	App. Total	Left	Thru	Right	App. Total	Left	Thru	Right	App. Total	Int. Total
Peak Hour Analysis From 10:00 AM to 01:45 PM - Peak 1 of 1																	
Peak Hour for Entire Intersection Begins at 01:00 PM																	
01:00 PM	0	1	**5**	**6**	0	0	0	0	0	1	**1**	**2**	0	0	0	0	**8**
01:15 PM	0	2	1	3	0	0	0	0	0	1	0	1	0	0	**1**	1	5
01:30 PM	0	1	3	4	0	**2**	0	**2**	**1**	1	0	2	0	0	0	0	8
01:45 PM	0	**3**	1	4	0	0	0	0	0	**2**	0	2	0	**1**	1	**2**	8
Total Volume	0	7	10	17	0	2	0	2	1	5	1	7	0	1	2	3	29
% App. Total	0	41.2	58.8		0	100	0		14.3	71.4	14.3		0	33.3	66.7		
PHF	.000	.583	.500	.708	.000	.250	.000	.250	.250	.625	.250	.875	.000	.250	.500	.375	.906

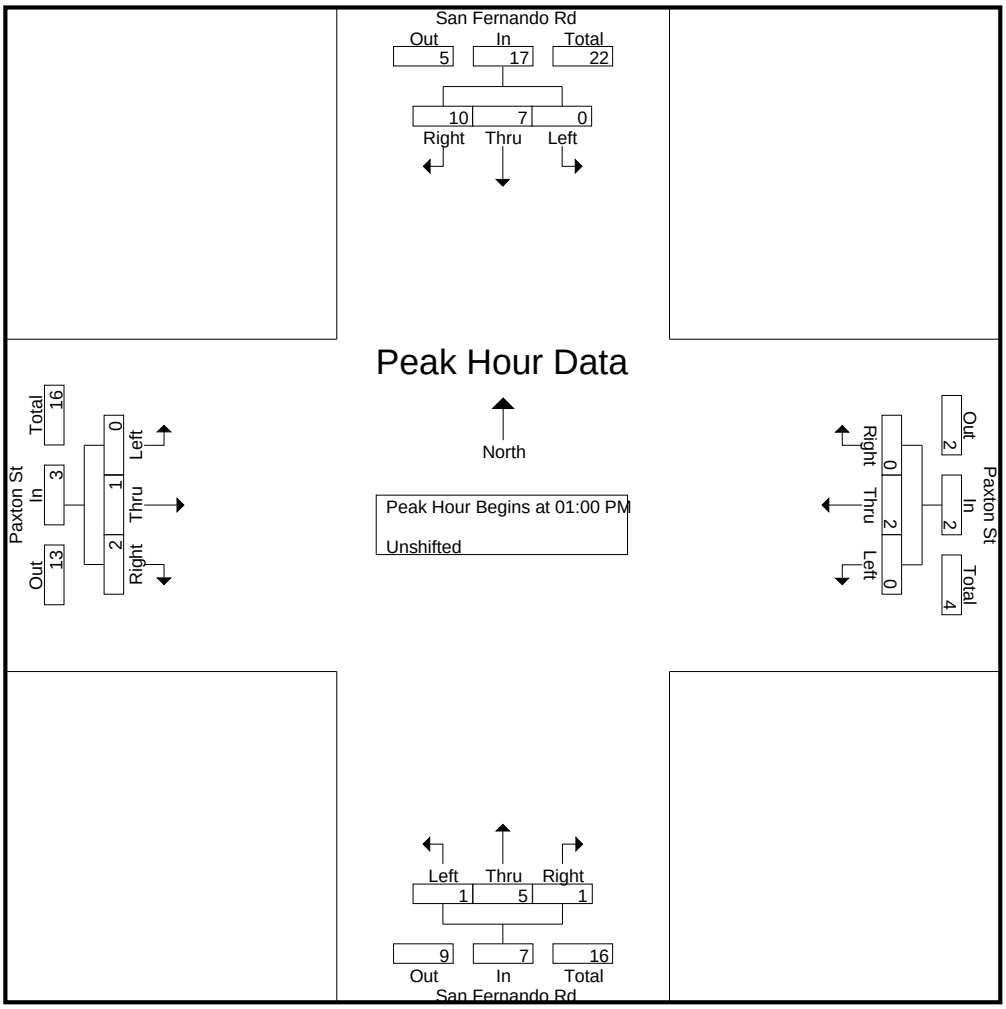

CITY TRAFFIC COUNTERS

626.991.7522

www.ctcounters.com

File Name : Paxton_SanFernando_5axle
Site Code : 00000000
Start Date : 3/25/2015
Page No : 4

	San Fernando Rd Southbound				Paxton St Westbound				San Fernando Rd Northbound				Paxton St Eastbound				
Start Time	Left	Thru	Right	App. Total	Left	Thru	Right	App. Total	Left	Thru	Right	App. Total	Left	Thru	Right	App. Total	Int. Total
Peak Hour Analysis From 02:00 PM to 05:45 PM - Peak 1 of 1																	
Peak Hour for Entire Intersection Begins at 03:45 PM																	
03:45 PM	0	0	0	0	0	1	0	1	0	**1**	0	**1**	0	**2**	**2**	**4**	**6**
04:00 PM	**1**	0	0	**1**	**1**	0	0	1	0	0	0	0	0	0	0	0	2
04:15 PM	0	**1**	0	1	0	**2**	0	**2**	0	0	**1**	1	0	0	0	0	4
04:30 PM	0	0	0	0	0	0	0	0	0	0	1	1	0	1	0	1	2
Total Volume	1	1	0	2	1	3	0	4	0	1	2	3	0	3	2	5	14
% App. Total	50	50	0		25	75	0		0	33.3	66.7		0	60	40		
PHF	.250	.250	.000	.500	.250	.375	.000	.500	.000	.250	.500	.750	.000	.375	.250	.313	.583

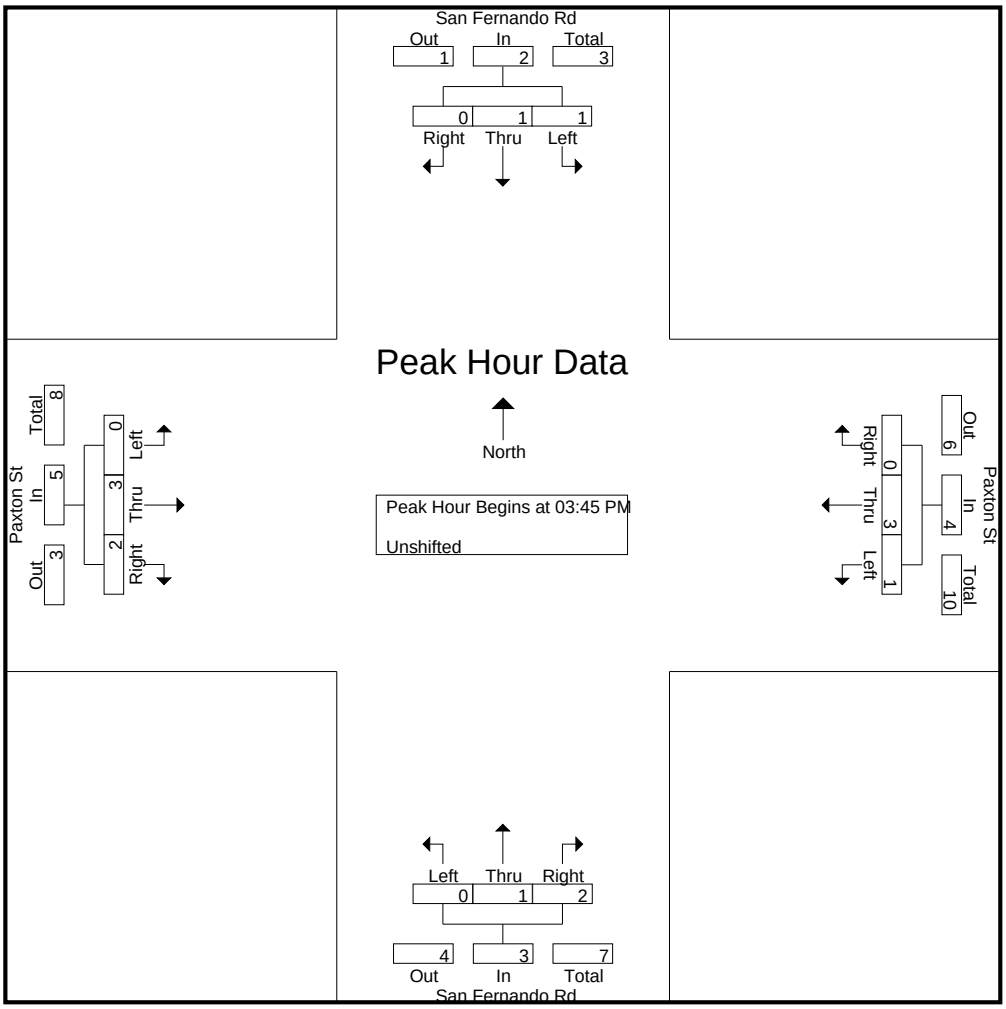

CITY TRAFFIC COUNTERS

626.991.7522

www.ctcounters.com

File Name : SanFernando_118EBRamps
Site Code : 00000000
Start Date : 3/25/2015
Page No : 1

Groups Printed- Unshifted

	San Fernando Rd Southbound			Westbound			San Fernando Rd Northbound			118 EB On/Off Ramps Eastbound			
Start Time	Left	Thru	Right	Left	Thru	Right	Left	Thru	Right	Left	Thru	Right	Int. Total
07:00 AM	0	98	33	0	0	0	9	79	0	96	0	65	380
07:15 AM	0	150	43	0	0	0	20	127	0	84	0	104	528
07:30 AM	0	177	55	0	0	0	19	126	0	91	0	112	580
07:45 AM	0	159	43	0	0	0	29	158	0	121	0	89	599
Total	0	584	174	0	0	0	77	490	0	392	0	370	2087
08:00 AM	0	170	41	0	0	0	15	138	0	150	0	88	602
08:15 AM	0	136	31	0	0	0	22	102	0	108	0	89	488
08:30 AM	0	117	28	0	0	0	18	114	0	98	0	69	444
08:45 AM	0	104	17	0	0	0	18	79	0	128	0	51	397
Total	0	527	117	0	0	0	73	433	0	484	0	297	1931
09:00 AM	0	100	19	0	0	0	8	107	0	94	0	39	367
09:15 AM	0	120	29	0	0	0	13	113	0	112	0	55	442
09:30 AM	0	128	25	0	0	0	12	119	0	124	0	52	460
09:45 AM	0	115	22	0	0	0	10	134	0	126	0	43	450
Total	0	463	95	0	0	0	43	473	0	456	0	189	1719
12:00 PM	0	142	27	0	0	0	13	148	0	119	0	37	486
12:15 PM	0	136	29	0	0	0	11	135	0	125	0	34	470
12:30 PM	0	135	36	0	0	0	10	135	0	123	0	38	477
12:45 PM	0	121	26	0	0	0	20	138	0	112	0	33	450
Total	0	534	118	0	0	0	54	556	0	479	0	142	1883
01:00 PM	0	140	23	0	0	0	20	135	0	106	0	32	456
01:15 PM	0	116	24	0	0	0	19	122	0	101	0	41	423
01:30 PM	0	143	31	0	0	0	14	128	0	111	0	41	468
01:45 PM	0	141	30	0	0	0	18	141	0	126	0	44	500
Total	0	540	108	0	0	0	71	526	0	444	0	158	1847
03:00 PM	0	133	33	0	0	0	12	187	0	126	0	51	542
03:15 PM	0	178	37	0	0	0	24	163	0	128	0	50	580
03:30 PM	0	167	39	0	0	0	22	150	0	102	0	59	539
03:45 PM	0	189	59	0	0	0	20	170	0	104	0	68	610
Total	0	667	168	0	0	0	78	670	0	460	0	228	2271
04:00 PM	0	186	45	0	0	0	19	143	0	99	0	52	544
04:15 PM	0	162	48	0	0	0	26	155	0	89	0	43	523
04:30 PM	0	198	53	0	0	0	31	186	0	112	0	49	629
04:45 PM	0	200	54	0	0	0	28	182	0	113	0	55	632
Total	0	746	200	0	0	0	104	666	0	413	0	199	2328
05:00 PM	0	170	64	0	0	0	29	194	0	96	0	48	601
05:15 PM	0	180	53	0	0	0	21	177	0	106	0	56	593
05:30 PM	0	174	52	0	0	0	33	180	0	110	0	53	602
05:45 PM	0	132	60	0	0	0	26	176	0	97	0	33	524
Total	0	656	229	0	0	0	109	727	0	409	0	190	2320
Grand Total	0	4717	1209	0	0	0	609	4541	0	3537	0	1773	16386
Apprch %	0	79.6	20.4	0	0	0	11.8	88.2	0	66.6	0	33.4	
Total %	0	28.8	7.4	0	0	0	3.7	27.7	0	21.6	0	10.8	

CITY TRAFFIC COUNTERS

626.991.7522

www.ctcounters.com

File Name : SanFernando_118EBRamps
Site Code : 00000000
Start Date : 3/25/2015
Page No : 2

	San Fernando Rd Southbound				Westbound				San Fernando Rd Northbound				118 EB On/Off Ramps Eastbound				
Start Time	Left	Thru	Right	App. Total	Left	Thru	Right	App. Total	Left	Thru	Right	App. Total	Left	Thru	Right	App. Total	Int. Total
Peak Hour Analysis From 07:00 AM to 09:45 AM - Peak 1 of 1																	
Peak Hour for Entire Intersection Begins at 07:15 AM																	
07:15 AM	0	150	43	193	0	0	0	0	20	127	0	147	84	0	104	188	528
07:30 AM	0	**177**	**55**	**232**	0	0	0	0	19	126	0	145	91	0	**112**	203	580
07:45 AM	0	159	43	202	0	0	0	0	**29**	**158**	0	**187**	121	0	89	210	599
08:00 AM	0	170	41	211	0	0	0	0	15	138	0	153	**150**	0	88	**238**	**602**
Total Volume	0	656	182	838	0	0	0	0	83	549	0	632	446	0	393	839	2309
% App. Total	0	78.3	21.7		0	0	0		13.1	86.9	0		53.2	0	46.8		
PHF	.000	.927	.827	.903	.000	.000	.000	.000	.716	.869	.000	.845	.743	.000	.877	.881	.959

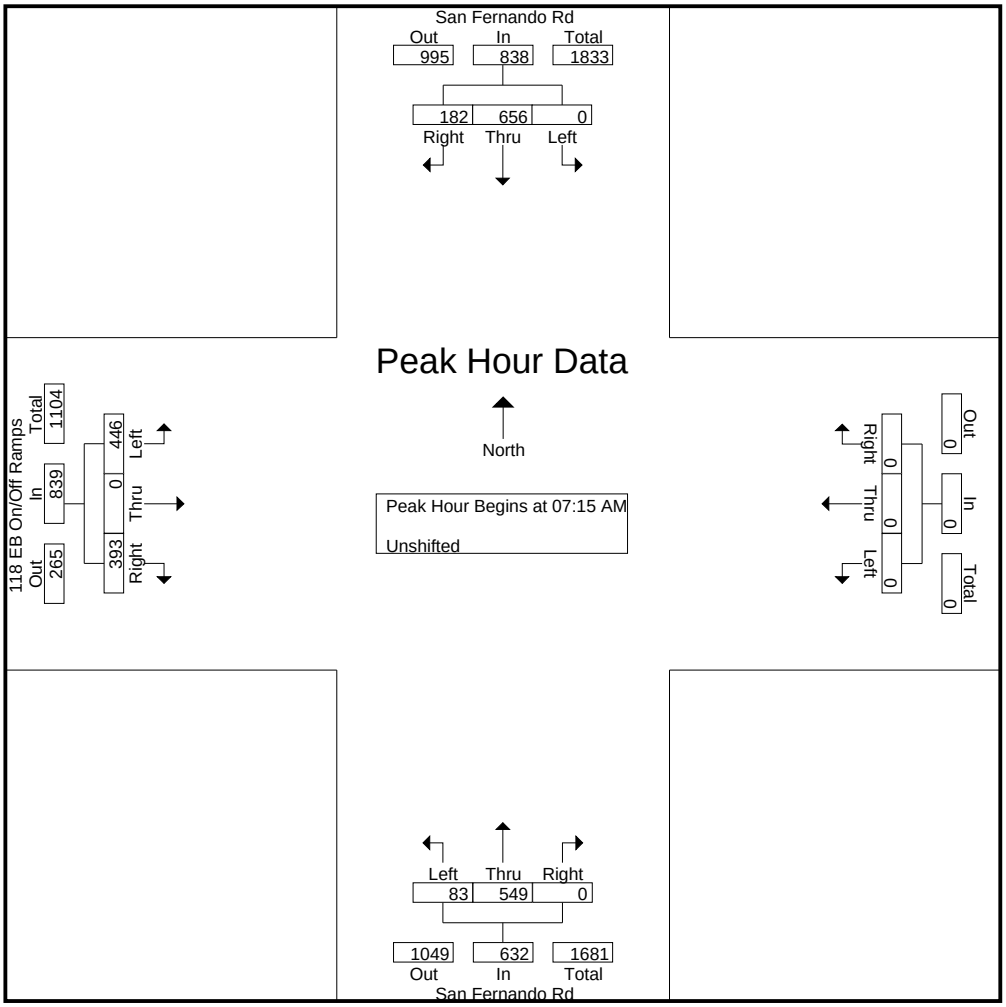

CITY TRAFFIC COUNTERS

626.991.7522

www.ctcounters.com

File Name : SanFernando_118EBRamps
Site Code : 00000000
Start Date : 3/25/2015
Page No : 3

	San Fernando Rd Southbound				Westbound				San Fernando Rd Northbound				118 EB On/Off Ramps Eastbound				
Start Time	Left	Thru	Right	App. Total	Left	Thru	Right	App. Total	Left	Thru	Right	App. Total	Left	Thru	Right	App. Total	Int. Total
Peak Hour Analysis From 10:00 AM to 01:45 PM - Peak 1 of 1																	
Peak Hour for Entire Intersection Begins at 12:00 PM																	
12:00 PM	0	**142**	27	169	0	0	0	0	13	**148**	0	**161**	119	0	37	156	**486**
12:15 PM	0	136	29	165	0	0	0	0	11	135	0	146	**125**	0	34	159	470
12:30 PM	0	135	**36**	**171**	0	0	0	0	10	135	0	145	123	0	**38**	**161**	477
12:45 PM	0	121	26	147	0	0	0	0	**20**	138	0	158	112	0	33	145	450
Total Volume	0	534	118	652	0	0	0	0	54	556	0	610	479	0	142	621	1883
% App. Total	0	81.9	18.1		0	0	0		8.9	91.1	0		77.1	0	22.9		
PHF	.000	.940	.819	.953	.000	.000	.000	.000	.675	.939	.000	.947	.958	.000	.934	.964	.969

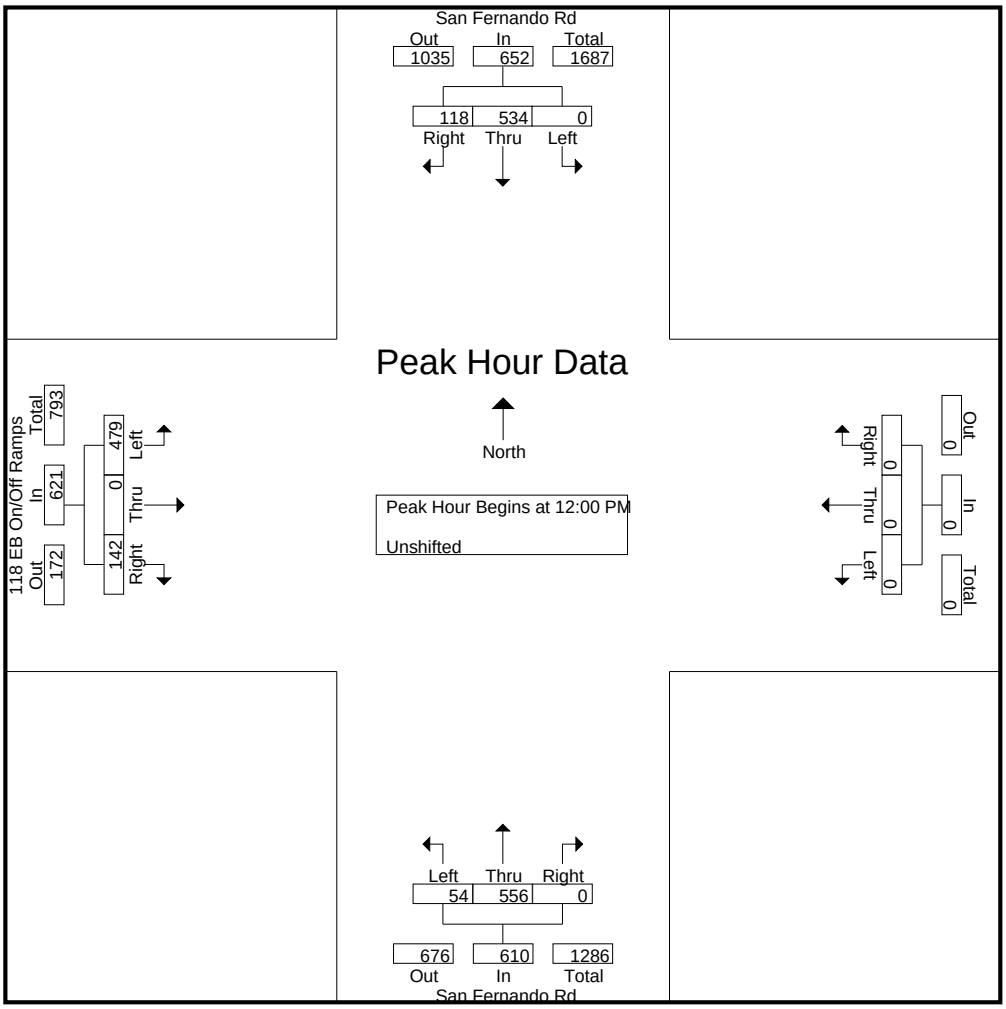

CITY TRAFFIC COUNTERS

626.991.7522

www.ctcounters.com

File Name : SanFernando_118EBRamps
Site Code : 00000000
Start Date : 3/25/2015
Page No : 4

	San Fernando Rd Southbound				Westbound				San Fernando Rd Northbound				118 EB On/Off Ramps Eastbound				
Start Time	Left	Thru	Right	App. Total	Left	Thru	Right	App. Total	Left	Thru	Right	App. Total	Left	Thru	Right	App. Total	Int. Total
Peak Hour Analysis From 02:00 PM to 05:45 PM - Peak 1 of 1																	
Peak Hour for Entire Intersection Begins at 04:30 PM																	
04:30 PM	0	198	53	251	0	0	0	0	**31**	186	0	217	112	0	49	161	629
04:45 PM	0	**200**	54	**254**	0	0	0	0	28	182	0	210	**113**	0	55	**168**	**632**
05:00 PM	0	170	**64**	234	0	0	0	0	29	**194**	0	**223**	96	0	48	144	601
05:15 PM	0	180	53	233	0	0	0	0	21	177	0	198	106	0	**56**	162	593
Total Volume	0	748	224	972	0	0	0	0	109	739	0	848	427	0	208	635	2455
% App. Total	0	77	23		0	0	0		12.9	87.1	0		67.2	0	32.8		
PHF	.000	.935	.875	.957	.000	.000	.000	.000	.879	.952	.000	.951	.945	.000	.929	.945	.971

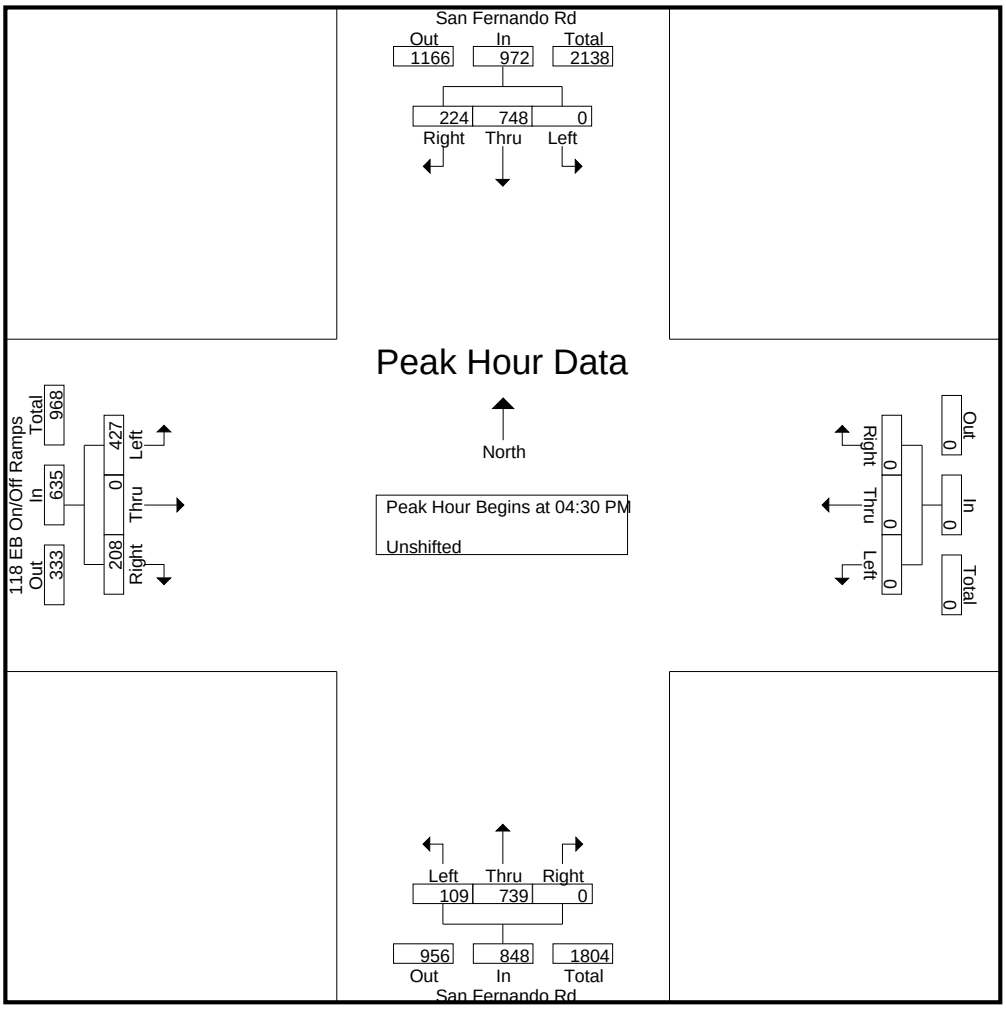

CITY TRAFFIC COUNTERS

626.991.7522

www.ctcounters.com

File Name : SanFernando_118EBRamps_Motorcycles
Site Code : 00000000
Start Date : 3/25/2015
Page No : 1

Groups Printed- Bank 2

	San Fernando Rd Southbound			Westbound			San Fernando Rd Northbound			118 EB On/Off Ramps Eastbound			
Start Time	Left	Thru	Right	Left	Thru	Right	Left	Thru	Right	Left	Thru	Right	Int. Total
07:00 AM	0	0	0	0	0	0	0	1	0	0	0	0	1
07:45 AM	0	0	0	0	0	0	0	1	0	0	0	0	1
Total	0	0	0	0	0	0	0	2	0	0	0	0	2
08:00 AM	0	1	0	0	0	0	0	0	0	2	0	0	3
08:15 AM	0	1	0	0	0	0	0	0	0	0	0	0	1
Total	0	2	0	0	0	0	0	0	0	2	0	0	4
12:00 PM	0	0	0	0	0	0	0	0	0	1	0	0	1
12:15 PM	0	0	0	0	0	0	0	1	0	0	0	0	1
12:30 PM	0	0	0	0	0	0	0	0	0	1	0	0	1
12:45 PM	0	0	0	0	0	0	1	0	0	1	0	2	4
Total	0	0	0	0	0	0	1	1	0	3	0	2	7
01:00 PM	0	0	0	0	0	0	1	0	0	0	0	0	1
01:45 PM	0	0	0	0	0	0	1	0	0	0	0	0	1
Total	0	0	0	0	0	0	2	0	0	0	0	0	2
03:00 PM	0	1	0	0	0	0	0	1	0	0	0	0	2
03:15 PM	0	0	0	0	0	0	0	1	0	0	0	0	1
03:30 PM	0	0	0	0	0	0	0	1	0	0	0	0	1
03:45 PM	0	2	0	0	0	0	0	0	0	1	0	0	3
Total	0	3	0	0	0	0	0	3	0	1	0	0	7
04:00 PM	0	1	0	0	0	0	0	0	0	0	0	0	1
04:30 PM	0	1	0	0	0	0	0	0	0	0	0	0	1
04:45 PM	0	0	0	0	0	0	0	0	0	0	0	1	1
Total	0	2	0	0	0	0	0	0	0	0	0	1	3
05:00 PM	0	2	0	0	0	0	0	1	0	0	0	0	3
05:15 PM	0	0	0	0	0	0	0	1	0	0	0	0	1
05:30 PM	0	0	0	0	0	0	0	0	0	0	0	1	1
Total	0	2	0	0	0	0	0	2	0	0	0	1	5
Grand Total	0	9	0	0	0	0	3	8	0	6	0	4	30
Apprch %	0	100	0	0	0	0	27.3	72.7	0	60	0	40	
Total %	0	30	0	0	0	0	10	26.7	0	20	0	13.3	

CITY TRAFFIC COUNTERS

626.991.7522

www.ctcounters.com

File Name : SanFernando_118EBRamps_Motorcycles
Site Code : 00000000
Start Date : 3/25/2015
Page No : 2

	San Fernando Rd Southbound				Westbound				San Fernando Rd Northbound				118 EB On/Off Ramps Eastbound				
Start Time	Left	Thru	Right	App. Total	Left	Thru	Right	App. Total	Left	Thru	Right	App. Total	Left	Thru	Right	App. Total	Int. Total
Peak Hour Analysis From 07:00 AM to 09:45 AM - Peak 1 of 1																	
Peak Hour for Entire Intersection Begins at 07:30 AM																	
07:30 AM	0	0	0	0	0	0	0	0	0	0	0	0	0	0	0	0	0
07:45 AM	0	0	0	0	0	0	0	0	0	**1**	0	**1**	0	0	0	0	1
08:00 AM	0	**1**	0	**1**	0	0	0	0	0	0	0	0	**2**	0	0	**2**	**3**
08:15 AM	0	1	0	1	0	0	0	0	0	0	0	0	0	0	0	0	1
Total Volume	0	2	0	2	0	0	0	0	0	1	0	1	2	0	0	2	5
% App. Total	0	100	0		0	0	0		0	100	0		100	0	0		
PHF	.000	.500	.000	.500	.000	.000	.000	.000	.000	.250	.000	.250	.250	.000	.000	.250	.417

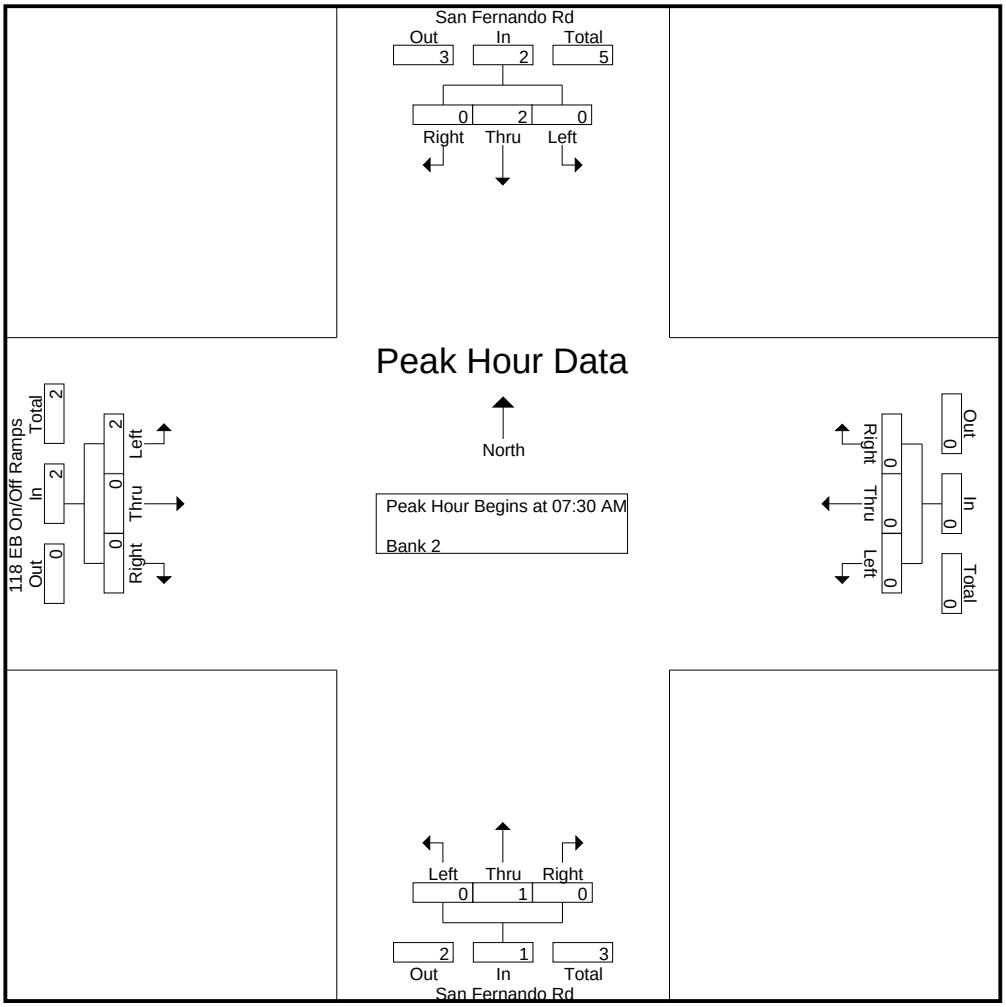

CITY TRAFFIC COUNTERS

626.991.7522

www.ctcounters.com

File Name : SanFernando_118EBRamps_Motorcycles
Site Code : 00000000
Start Date : 3/25/2015
Page No : 3

	San Fernando Rd Southbound				Westbound				San Fernando Rd Northbound				118 EB On/Off Ramps Eastbound				
Start Time	Left	Thru	Right	App. Total	Left	Thru	Right	App. Total	Left	Thru	Right	App. Total	Left	Thru	Right	App. Total	Int. Total
Peak Hour Analysis From 10:00 AM to 01:45 PM - Peak 1 of 1																	
Peak Hour for Entire Intersection Begins at 12:00 PM																	
12:00 PM	0	0	0	0	0	0	0	0	0	0	0	0	**1**	0	0	1	1
12:15 PM	0	0	0	0	0	0	0	0	0	**1**	0	**1**	0	0	0	0	1
12:30 PM	0	0	0	0	0	0	0	0	0	0	0	0	1	0	0	1	1
12:45 PM	0	0	0	0	0	0	0	0	**1**	0	0	1	1	0	**2**	**3**	**4**
Total Volume	0	0	0	0	0	0	0	0	1	1	0	2	3	0	2	5	7
% App. Total	0	0	0		0	0	0		50	50	0		60	0	40		
PHF	.000	.000	.000	.000	.000	.000	.000	.000	.250	.250	.000	.500	.750	.000	.250	.417	.438

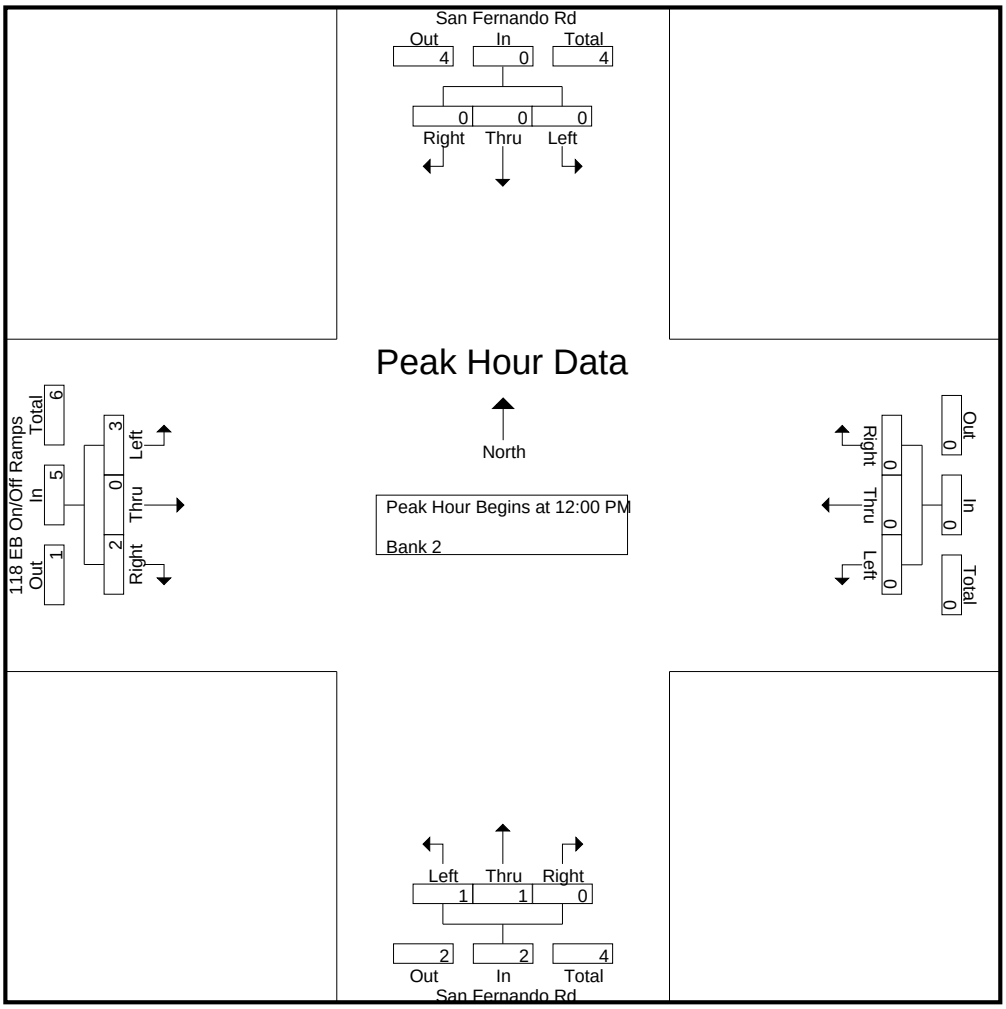

CITY TRAFFIC COUNTERS

626.991.7522

www.ctcounters.com

File Name : SanFernando_118EBRamps_Motorcycles
Site Code : 00000000
Start Date : 3/25/2015
Page No : 4

	San Fernando Rd Southbound				Westbound				San Fernando Rd Northbound				118 EB On/Off Ramps Eastbound				
Start Time	Left	Thru	Right	App. Total	Left	Thru	Right	App. Total	Left	Thru	Right	App. Total	Left	Thru	Right	App. Total	Int. Total
Peak Hour Analysis From 02:00 PM to 05:45 PM - Peak 1 of 1																	
Peak Hour for Entire Intersection Begins at 03:00 PM																	
03:00 PM	0	1	0	1	0	0	0	0	0	**1**	0	**1**	0	0	0	0	2
03:15 PM	0	0	0	0	0	0	0	0	0	1	0	1	0	0	0	0	1
03:30 PM	0	0	0	0	0	0	0	0	0	1	0	1	0	0	0	0	1
03:45 PM	0	**2**	0	**2**	0	0	0	0	0	0	0	0	**1**	0	0	**1**	**3**
Total Volume	0	3	0	3	0	0	0	0	0	3	0	3	1	0	0	1	7
% App. Total	0	100	0		0	0	0		0	100	0		100	0	0		
PHF	.000	.375	.000	.375	.000	.000	.000	.000	.000	.750	.000	.750	.250	.000	.000	.250	.583

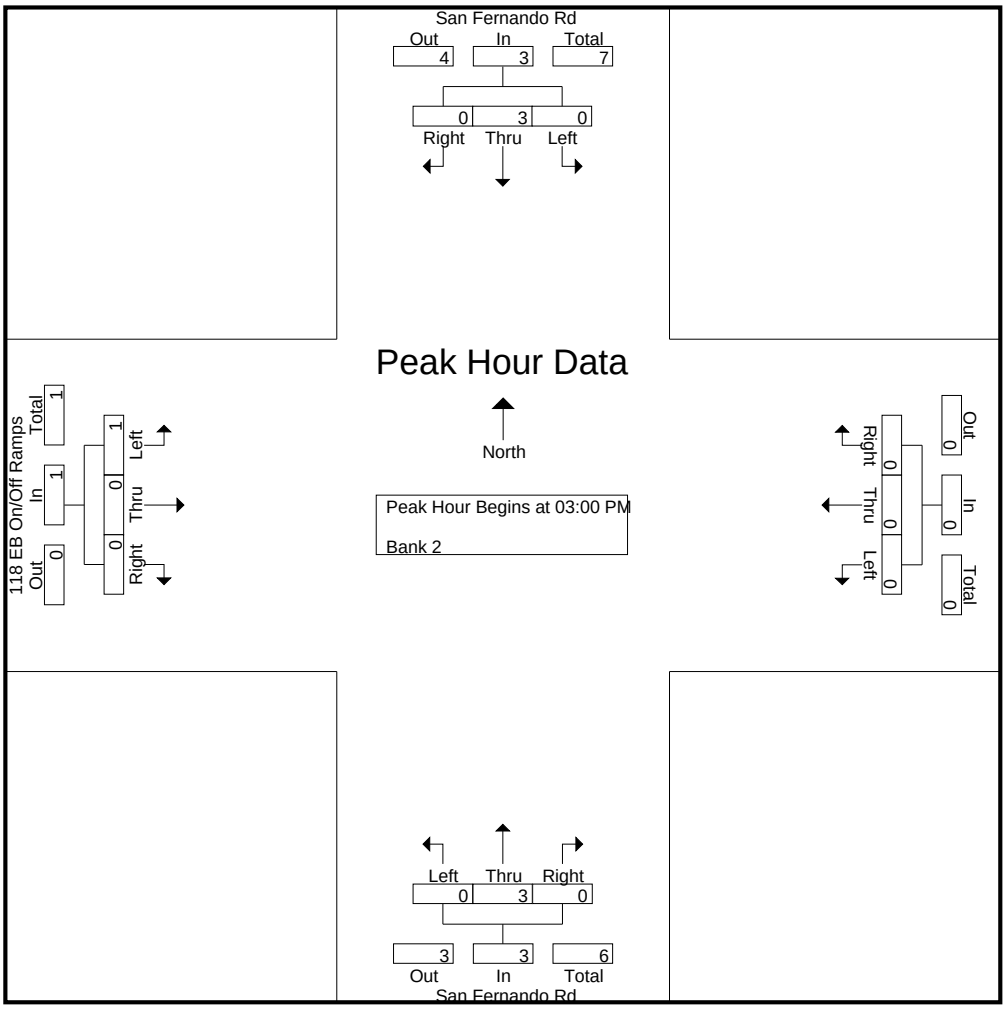

CITY TRAFFIC COUNTERS

626.991.7522

www.ctcounters.com

File Name : SanFernando_118EBRamps_Buses
Site Code : 00000000
Start Date : 3/25/2015
Page No : 1

Groups Printed- Bank 1

	San Fernando Rd Southbound			Westbound			San Fernando Rd Northbound			118 EB On/Off Ramps Eastbound			
Start Time	Left	Thru	Right	Left	Thru	Right	Left	Thru	Right	Left	Thru	Right	Int. Total
07:00 AM	0	1	0	0	0	0	0	1	0	0	0	1	3
07:15 AM	0	2	0	0	0	0	0	2	0	0	0	1	5
07:30 AM	0	1	1	0	0	0	0	1	0	0	0	0	3
07:45 AM	0	2	0	0	0	0	0	2	0	0	0	0	4
Total	0	6	1	0	0	0	0	6	0	0	0	2	15
08:00 AM	0	2	0	0	0	0	0	1	0	0	0	0	3
08:15 AM	0	2	0	0	0	0	0	2	0	0	0	0	4
08:30 AM	0	1	0	0	0	0	1	3	0	1	0	0	6
08:45 AM	0	2	0	0	0	0	0	4	0	2	0	0	8
Total	0	7	0	0	0	0	1	10	0	3	0	0	21
09:00 AM	0	1	0	0	0	0	0	2	0	5	0	0	8
09:15 AM	0	1	0	0	0	0	0	3	0	5	0	0	9
09:30 AM	0	1	0	0	0	0	0	0	0	0	0	0	1
09:45 AM	0	1	0	0	0	0	0	1	0	0	0	0	2
Total	0	4	0	0	0	0	0	6	0	10	0	0	20
12:00 PM	0	1	1	0	0	0	0	0	0	0	0	0	2
12:15 PM	0	2	0	0	0	0	0	1	0	1	0	1	5
12:30 PM	0	0	0	0	0	0	0	1	0	0	0	1	2
12:45 PM	0	3	1	0	0	0	0	0	0	0	0	0	4
Total	0	6	2	0	0	0	0	2	0	1	0	2	13
01:00 PM	0	0	1	0	0	0	0	1	0	0	0	0	2
01:15 PM	0	2	1	0	0	0	0	1	0	0	0	0	4
01:30 PM	0	4	0	0	0	0	0	1	0	1	0	0	6
01:45 PM	0	2	2	0	0	0	0	1	0	0	0	0	5
Total	0	8	4	0	0	0	0	4	0	1	0	0	17
03:00 PM	0	2	0	0	0	0	0	1	0	1	0	0	4
03:15 PM	0	2	0	0	0	0	0	1	0	1	0	0	4
03:30 PM	0	2	0	0	0	0	0	2	0	0	0	0	4
03:45 PM	0	4	0	0	0	0	0	1	0	1	0	0	6
Total	0	10	0	0	0	0	0	5	0	3	0	0	18
04:00 PM	0	2	0	0	0	0	0	1	0	1	0	0	4
04:15 PM	0	1	0	0	0	0	0	3	0	0	0	0	4
04:30 PM	0	3	0	0	0	0	0	3	0	0	0	0	6
04:45 PM	0	0	0	0	0	0	0	2	0	0	0	0	2
Total	0	6	0	0	0	0	0	9	0	1	0	0	16
05:00 PM	0	2	0	0	0	0	0	3	0	1	0	0	6
05:15 PM	0	0	1	0	0	0	0	1	0	0	0	0	2
05:30 PM	0	2	0	0	0	0	0	2	0	0	0	0	4
05:45 PM	0	1	0	0	0	0	0	1	0	3	0	0	5
Total	0	5	1	0	0	0	0	7	0	4	0	0	17
Grand Total	0	52	8	0	0	0	1	49	0	23	0	4	137
Apprch %	0	86.7	13.3	0	0	0	2	98	0	85.2	0	14.8	
Total %	0	38	5.8	0	0	0	0.7	35.8	0	16.8	0	2.9	

CITY TRAFFIC COUNTERS

626.991.7522

www.ctcounters.com

File Name : SanFernando_118EBRamps_Buses
Site Code : 00000000
Start Date : 3/25/2015
Page No : 2

	San Fernando Rd Southbound				Westbound				San Fernando Rd Northbound				118 EB On/Off Ramps Eastbound				
Start Time	Left	Thru	Right	App. Total	Left	Thru	Right	App. Total	Left	Thru	Right	App. Total	Left	Thru	Right	App. Total	Int. Total
Peak Hour Analysis From 07:00 AM to 09:45 AM - Peak 1 of 1																	
Peak Hour for Entire Intersection Begins at 08:30 AM																	
08:30 AM	0	1	0	1	0	0	0	0	**1**	3	0	**4**	1	0	0	1	6
08:45 AM	0	**2**	0	**2**	0	0	0	0	0	**4**	0	4	2	0	0	2	8
09:00 AM	0	1	0	1	0	0	0	0	0	2	0	2	**5**	0	0	**5**	8
09:15 AM	0	1	0	1	0	0	0	0	0	3	0	3	5	0	0	5	**9**
Total Volume	0	5	0	5	0	0	0	0	1	12	0	13	13	0	0	13	31
% App. Total	0	100	0		0	0	0		7.7	92.3	0		100	0	0		
PHF	.000	.625	.000	.625	.000	.000	.000	.000	.250	.750	.000	.813	.650	.000	.000	.650	.861

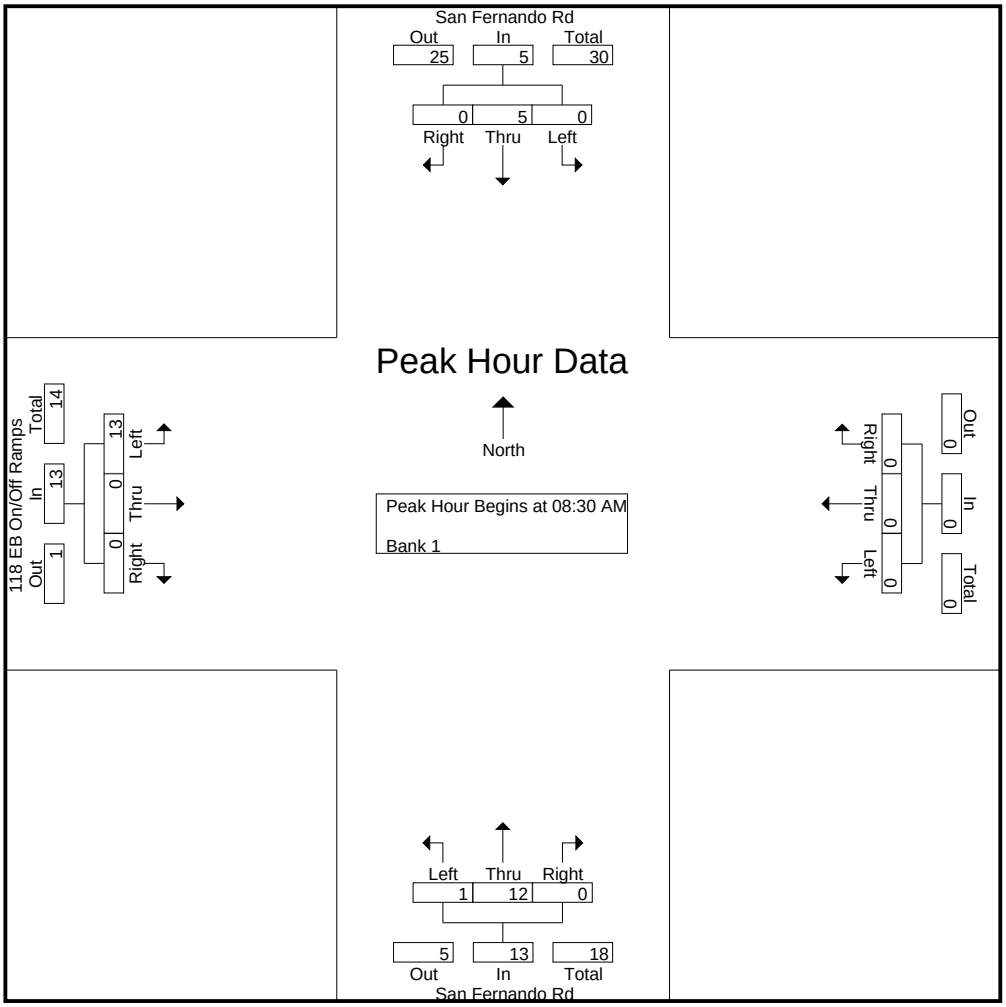

CITY TRAFFIC COUNTERS

626.991.7522

www.ctcounters.com

File Name : SanFernando_118EBRamps_Buses
Site Code : 00000000
Start Date : 3/25/2015
Page No : 3

	San Fernando Rd Southbound				Westbound				San Fernando Rd Northbound				118 EB On/Off Ramps Eastbound				
Start Time	Left	Thru	Right	App. Total	Left	Thru	Right	App. Total	Left	Thru	Right	App. Total	Left	Thru	Right	App. Total	Int. Total
Peak Hour Analysis From 10:00 AM to 01:45 PM - Peak 1 of 1																	
Peak Hour for Entire Intersection Begins at 01:00 PM																	
01:00 PM	0	0	1	1	0	0	0	0	0	**1**	0	**1**	0	0	0	0	2
01:15 PM	0	2	1	3	0	0	0	0	0	1	0	1	0	0	0	0	4
01:30 PM	0	**4**	0	**4**	0	0	0	0	0	1	0	1	**1**	0	0	**1**	**6**
01:45 PM	0	2	**2**	4	0	0	0	0	0	1	0	1	0	0	0	0	5
Total Volume	0	8	4	12	0	0	0	0	0	4	0	4	1	0	0	1	17
% App. Total	0	66.7	33.3		0	0	0		0	100	0		100	0	0		
PHF	.000	.500	.500	.750	.000	.000	.000	.000	.000	1.00	.000	1.00	.250	.000	.000	.250	.708

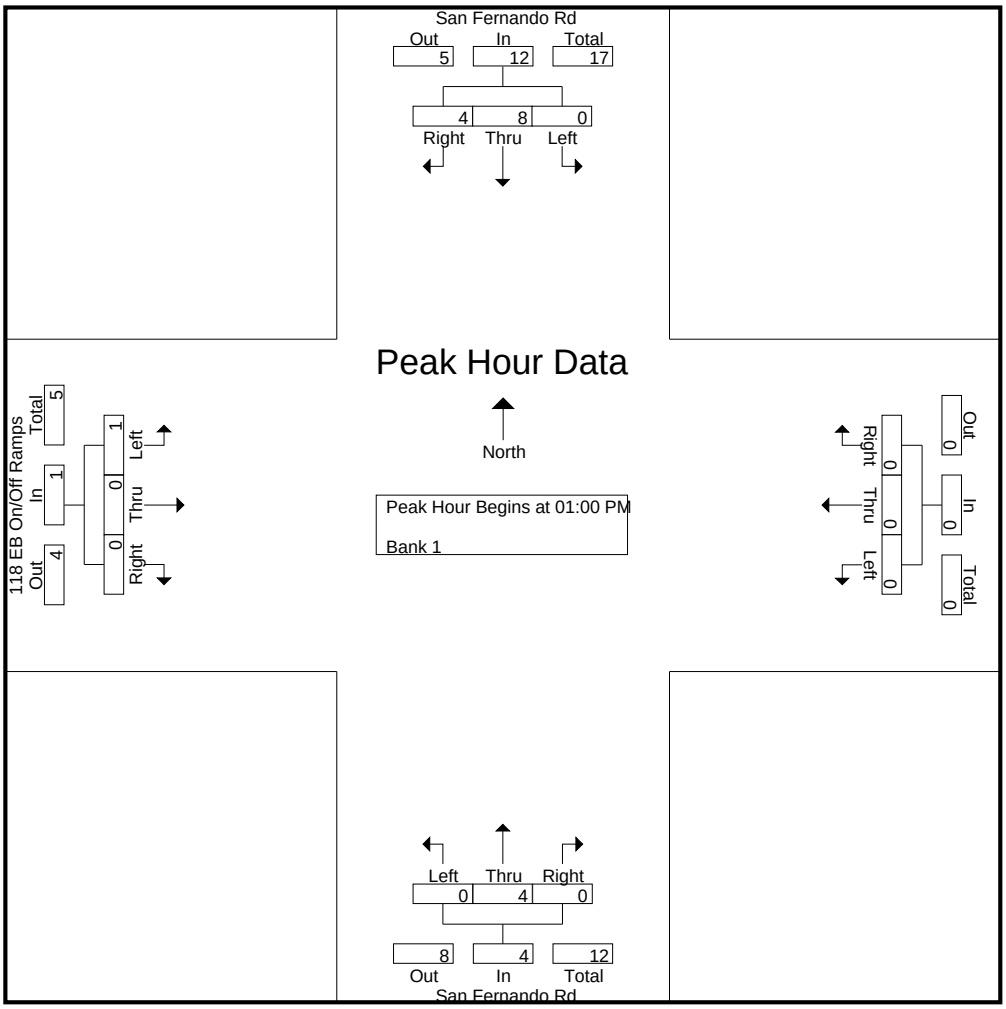

CITY TRAFFIC COUNTERS

626.991.7522

www.ctcounters.com

File Name : SanFernando_118EBRamps_Buses
Site Code : 00000000
Start Date : 3/25/2015
Page No : 4

	San Fernando Rd Southbound				Westbound				San Fernando Rd Northbound				118 EB On/Off Ramps Eastbound				
Start Time	Left	Thru	Right	App. Total	Left	Thru	Right	App. Total	Left	Thru	Right	App. Total	Left	Thru	Right	App. Total	Int. Total
Peak Hour Analysis From 02:00 PM to 05:45 PM - Peak 1 of 1																	
Peak Hour for Entire Intersection Begins at 03:45 PM																	
03:45 PM	0	**4**	0	**4**	0	0	0	0	0	1	0	1	**1**	0	0	**1**	**6**
04:00 PM	0	2	0	2	0	0	0	0	0	1	0	1	1	0	0	1	4
04:15 PM	0	1	0	1	0	0	0	0	0	**3**	0	**3**	0	0	0	0	4
04:30 PM	0	3	0	3	0	0	0	0	0	3	0	3	0	0	0	0	6
Total Volume	0	10	0	10	0	0	0	0	0	8	0	8	2	0	0	2	20
% App. Total	0	100	0		0	0	0		0	100	0		100	0	0		
PHF	.000	.625	.000	.625	.000	.000	.000	.000	.000	.667	.000	.667	.500	.000	.000	.500	.833

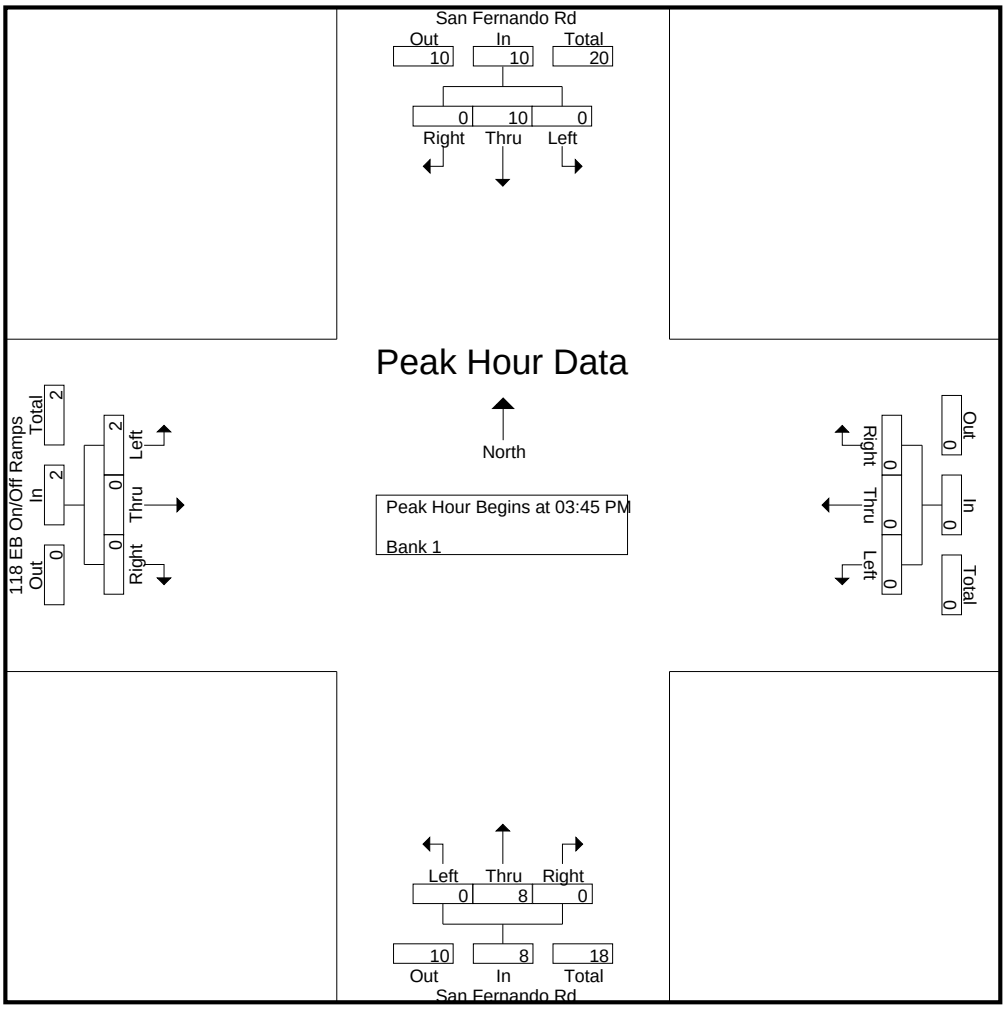

CITY TRAFFIC COUNTERS

626.991.7522

www.ctcounters.com

File Name : sanfernando_118ebramps_2axle
Site Code : 00000000
Start Date : 3/25/2015
Page No : 1

Groups Printed- Unshifted

	San Fernando Rd Southbound			Westbound			San Fernando Rd Northbound			118 EB On/Off Ramps Eastbound			
Start Time	Left	Thru	Right	Left	Thru	Right	Left	Thru	Right	Left	Thru	Right	Int. Total
07:00 AM	0	7	1	0	0	0	1	3	0	5	0	2	19
07:15 AM	0	7	3	0	0	0	1	3	0	4	0	1	19
07:30 AM	0	8	1	0	0	0	1	2	0	3	0	5	20
07:45 AM	0	6	0	0	0	0	1	1	0	1	0	0	9
Total	0	28	5	0	0	0	4	9	0	13	0	8	67
08:00 AM	0	9	2	0	0	0	0	5	0	0	0	1	17
08:15 AM	0	9	1	0	0	0	1	4	0	6	0	1	22
08:30 AM	0	8	2	0	0	0	1	4	0	3	0	0	18
08:45 AM	0	6	2	0	0	0	1	3	0	1	0	2	15
Total	0	32	7	0	0	0	3	16	0	10	0	4	72
09:00 AM	0	14	3	0	0	0	1	3	0	4	0	0	25
09:15 AM	0	11	3	0	0	0	1	5	0	2	0	1	23
09:30 AM	0	14	3	0	0	0	1	5	0	3	0	1	27
09:45 AM	0	8	2	0	0	0	1	4	0	5	0	2	22
Total	0	47	11	0	0	0	4	17	0	14	0	4	97
12:00 PM	0	9	2	0	0	0	1	3	0	4	0	1	20
12:15 PM	0	9	2	0	0	0	2	5	0	4	0	0	22
12:30 PM	0	7	3	0	0	0	1	4	0	1	0	1	17
12:45 PM	0	10	1	0	0	0	1	6	0	0	0	1	19
Total	0	35	8	0	0	0	5	18	0	9	0	3	78
01:00 PM	0	3	2	0	0	0	0	5	0	1	0	2	13
01:15 PM	0	4	1	0	0	0	0	5	0	2	0	2	14
01:30 PM	0	9	2	0	0	0	2	3	0	3	0	0	19
01:45 PM	0	7	3	0	0	0	1	6	0	2	0	2	21
Total	0	23	8	0	0	0	3	19	0	8	0	6	67
03:00 PM	0	6	1	0	0	0	0	6	0	6	0	2	21
03:15 PM	0	7	2	0	0	0	0	3	0	5	0	2	19
03:30 PM	0	8	2	0	0	0	3	4	0	9	0	2	28
03:45 PM	0	3	4	0	0	0	2	4	0	2	0	1	16
Total	0	24	9	0	0	0	5	17	0	22	0	7	84
04:00 PM	0	3	2	0	0	0	1	5	0	6	0	1	18
04:15 PM	0	9	0	0	0	0	2	4	0	6	0	1	22
04:30 PM	0	5	1	0	0	0	1	4	0	2	0	2	15
04:45 PM	0	10	1	0	0	0	1	5	0	4	0	1	22
Total	0	27	4	0	0	0	5	18	0	18	0	5	77
05:00 PM	0	6	2	0	0	0	0	3	0	1	0	2	14
05:15 PM	0	5	3	0	0	0	0	4	0	6	0	2	20
05:30 PM	0	6	1	0	0	0	0	6	0	2	0	0	15
05:45 PM	0	2	2	0	0	0	1	8	0	1	0	2	16
Total	0	19	8	0	0	0	1	21	0	10	0	6	65
Grand Total	0	235	60	0	0	0	30	135	0	104	0	43	607
Apprch %	0	79.7	20.3	0	0	0	18.2	81.8	0	70.7	0	29.3	
Total %	0	38.7	9.9	0	0	0	4.9	22.2	0	17.1	0	7.1	

CITY TRAFFIC COUNTERS

626.991.7522

www.ctcounters.com

File Name : sanfernando_118ebramps_2axle
Site Code : 00000000
Start Date : 3/25/2015
Page No : 2

	San Fernando Rd Southbound				Westbound				San Fernando Rd Northbound				118 EB On/Off Ramps Eastbound				
Start Time	Left	Thru	Right	App. Total	Left	Thru	Right	App. Total	Left	Thru	Right	App. Total	Left	Thru	Right	App. Total	Int. Total
Peak Hour Analysis From 07:00 AM to 09:45 AM - Peak 1 of 1																	
Peak Hour for Entire Intersection Begins at 09:00 AM																	
09:00 AM	0	**14**	**3**	**17**	0	0	0	0	**1**	3	0	4	4	0	0	4	25
09:15 AM	0	11	3	14	0	0	0	0	1	**5**	0	**6**	2	0	1	3	23
09:30 AM	0	14	3	17	0	0	0	0	1	5	0	6	3	0	1	4	**27**
09:45 AM	0	8	2	10	0	0	0	0	1	4	0	5	**5**	0	**2**	**7**	22
Total Volume	0	47	11	58	0	0	0	0	4	17	0	21	14	0	4	18	97
% App. Total	0	81	19		0	0	0		19	81	0		77.8	0	22.2		
PHF	.000	.839	.917	.853	.000	.000	.000	.000	1.00	.850	.000	.875	.700	.000	.500	.643	.898

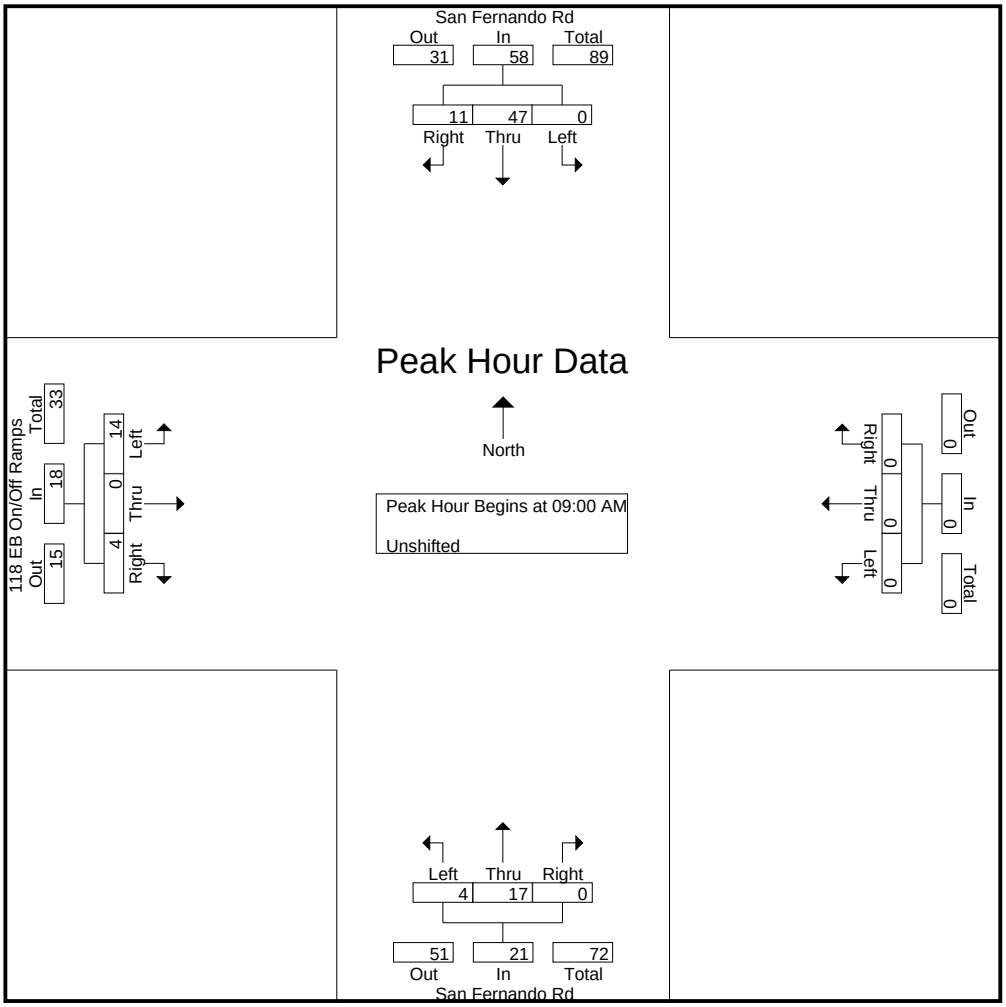

CITY TRAFFIC COUNTERS

626.991.7522

www.ctcounters.com

File Name : sanfernando_118ebramps_2axle
Site Code : 00000000
Start Date : 3/25/2015
Page No : 3

	San Fernando Rd Southbound				Westbound				San Fernando Rd Northbound				118 EB On/Off Ramps Eastbound				
Start Time	Left	Thru	Right	App. Total	Left	Thru	Right	App. Total	Left	Thru	Right	App. Total	Left	Thru	Right	App. Total	Int. Total
Peak Hour Analysis From 10:00 AM to 01:45 PM - Peak 1 of 1																	
Peak Hour for Entire Intersection Begins at 12:00 PM																	
12:00 PM	0	9	2	**11**	0	0	0	0	1	3	0	4	**4**	0	**1**	**5**	20
12:15 PM	0	9	2	11	0	0	0	0	**2**	5	0	**7**	4	0	0	4	**22**
12:30 PM	0	7	**3**	10	0	0	0	0	1	4	0	5	1	0	1	2	17
12:45 PM	0	**10**	1	11	0	0	0	0	1	**6**	0	7	0	0	1	1	19
Total Volume	0	35	8	43	0	0	0	0	5	18	0	23	9	0	3	12	78
% App. Total	0	81.4	18.6		0	0	0		21.7	78.3	0		75	0	25		
PHF	.000	.875	.667	.977	.000	.000	.000	.000	.625	.750	.000	.821	.563	.000	.750	.600	.886

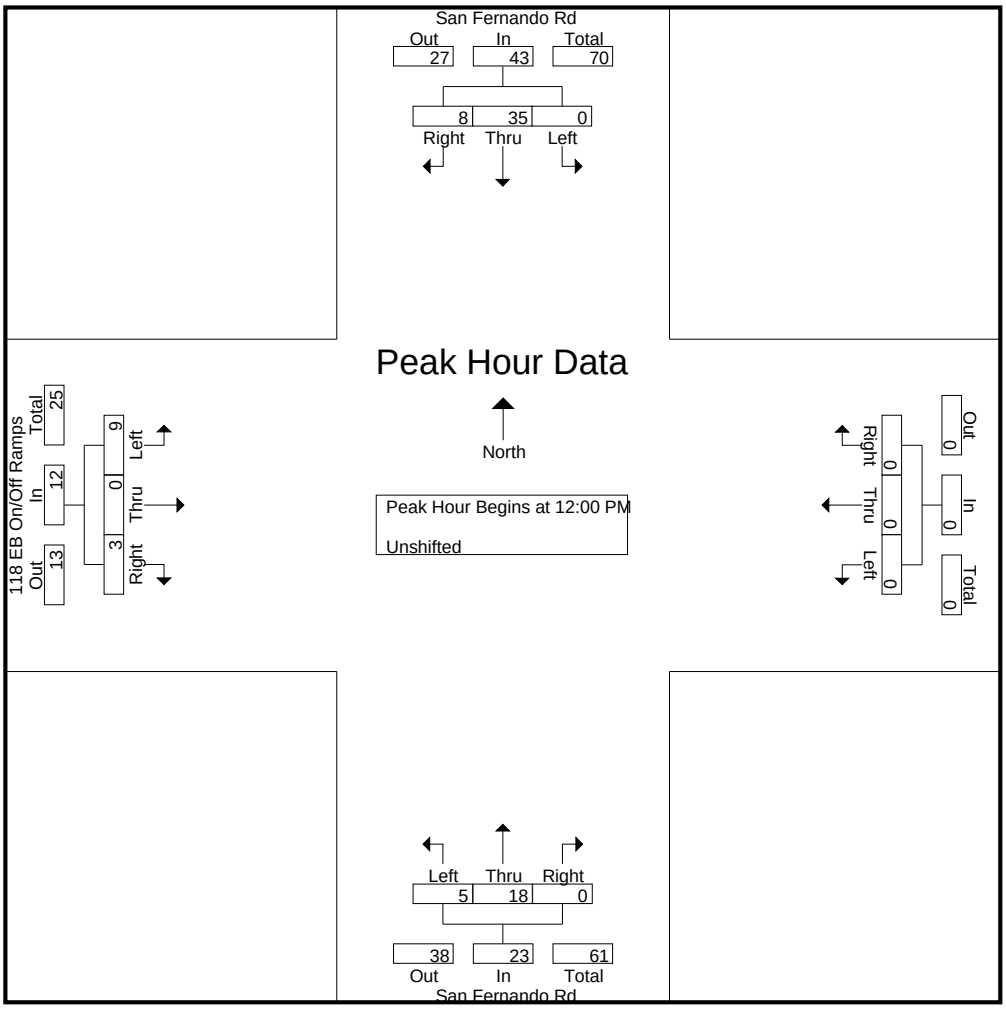

CITY TRAFFIC COUNTERS

626.991.7522

www.ctcounters.com

File Name : sanfernando_118ebramps_2axle
Site Code : 00000000
Start Date : 3/25/2015
Page No : 4

	San Fernando Rd Southbound				Westbound				San Fernando Rd Northbound				118 EB On/Off Ramps Eastbound				
Start Time	Left	Thru	Right	App. Total	Left	Thru	Right	App. Total	Left	Thru	Right	App. Total	Left	Thru	Right	App. Total	Int. Total
Peak Hour Analysis From 02:00 PM to 05:45 PM - Peak 1 of 1																	
Peak Hour for Entire Intersection Begins at 03:00 PM																	
03:00 PM	0	6	1	7	0	0	0	0	0	**6**	0	6	6	0	**2**	8	21
03:15 PM	0	7	2	9	0	0	0	0	0	3	0	3	5	0	2	7	19
03:30 PM	0	**8**	2	**10**	0	0	0	0	**3**	4	0	**7**	**9**	0	2	**11**	**28**
03:45 PM	0	3	**4**	7	0	0	0	0	2	4	0	6	2	0	1	3	16
Total Volume	0	24	9	33	0	0	0	0	5	17	0	22	22	0	7	29	84
% App. Total	0	72.7	27.3		0	0	0		22.7	77.3	0		75.9	0	24.1		
PHF	.000	.750	.563	.825	.000	.000	.000	.000	.417	.708	.000	.786	.611	.000	.875	.659	.750

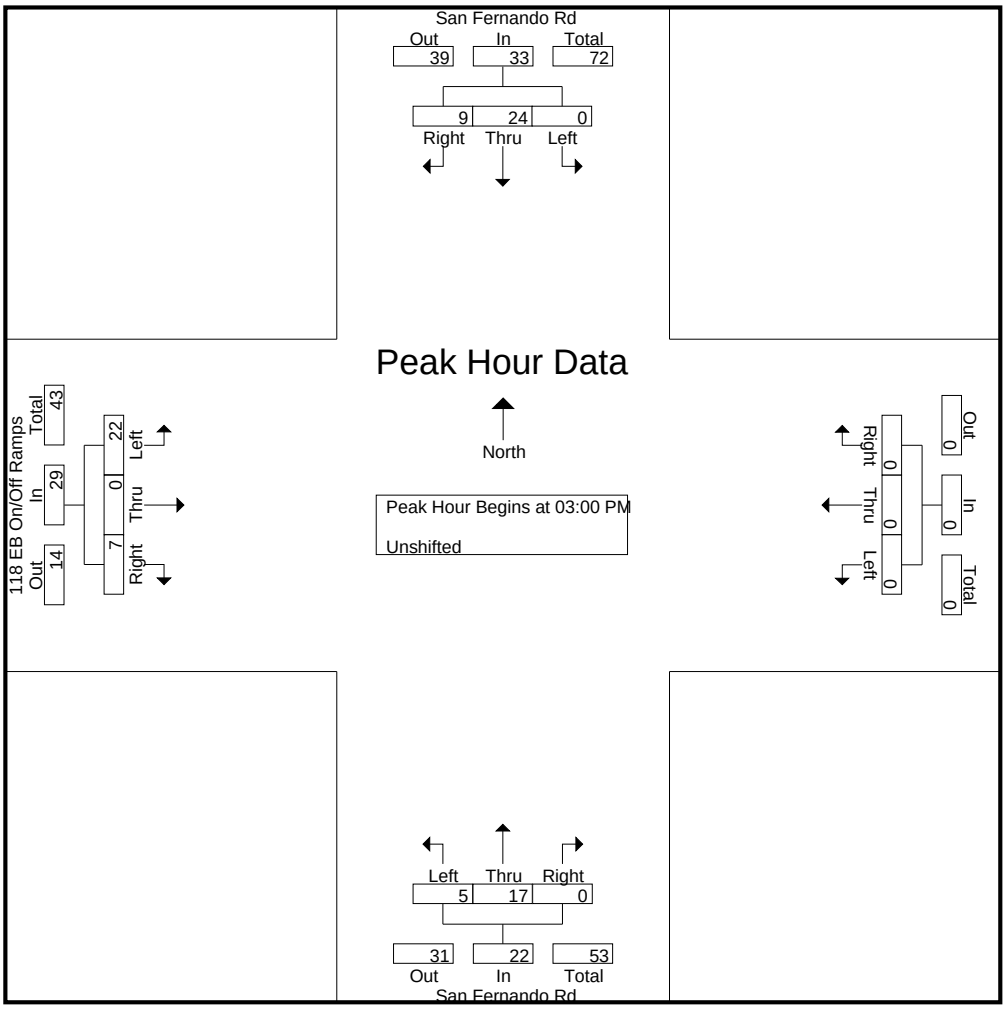

CITY TRAFFIC COUNTERS

626.991.7522

www.ctcounters.com

File Name : SanFernando_118EBRamps_3axle
Site Code : 00000000
Start Date : 3/25/2015
Page No : 1

Groups Printed- Bank 1

	San Fernando Rd Southbound			Westbound			San Fernando Rd Northbound			118 EB On/Off Ramps Eastbound			
Start Time	Left	Thru	Right	Left	Thru	Right	Left	Thru	Right	Left	Thru	Right	Int. Total
07:00 AM	0	2	0	0	0	0	0	0	0	0	0	2	4
07:15 AM	0	0	1	0	0	0	0	0	0	0	0	2	3
07:30 AM	0	0	0	0	0	0	0	1	0	1	0	2	4
07:45 AM	0	0	0	0	0	0	0	0	0	0	0	1	1
Total	0	2	1	0	0	0	0	1	0	1	0	7	12
08:00 AM	0	1	2	0	0	0	0	1	0	1	0	1	6
08:15 AM	0	2	0	0	0	0	0	0	0	0	0	0	2
08:30 AM	0	0	3	0	0	0	0	1	0	0	0	1	5
08:45 AM	0	0	1	0	0	0	0	0	0	2	0	2	5
Total	0	3	6	0	0	0	0	2	0	3	0	4	18
09:00 AM	0	1	0	0	0	0	0	0	0	1	0	0	2
09:15 AM	0	0	3	0	0	0	0	0	0	0	0	1	4
09:30 AM	0	0	2	0	0	0	0	2	0	2	0	0	6
09:45 AM	0	0	1	0	0	0	0	0	0	0	0	1	2
Total	0	1	6	0	0	0	0	2	0	3	0	2	14
12:00 PM	0	0	2	0	0	0	0	2	0	2	0	1	7
12:15 PM	0	1	2	0	0	0	0	1	0	3	0	0	7
12:30 PM	0	2	2	0	0	0	0	1	0	1	0	0	6
12:45 PM	0	2	0	0	0	0	0	2	0	0	0	0	4
Total	0	5	6	0	0	0	0	6	0	6	0	1	24
01:00 PM	0	2	3	0	0	0	0	2	0	2	0	1	10
01:15 PM	0	0	0	0	0	0	0	0	0	1	0	0	1
01:30 PM	0	1	1	0	0	0	0	0	0	1	0	0	3
01:45 PM	0	0	1	0	0	0	1	2	0	1	0	0	5
Total	0	3	5	0	0	0	1	4	0	5	0	1	19
03:00 PM	0	0	2	0	0	0	0	0	0	2	0	0	4
03:15 PM	0	1	2	0	0	0	0	0	0	3	0	1	7
03:30 PM	0	1	0	0	0	0	1	0	0	2	0	0	4
03:45 PM	0	0	0	0	0	0	0	0	0	0	0	4	4
Total	0	2	4	0	0	0	1	0	0	7	0	5	19
04:00 PM	0	0	0	0	0	0	0	0	0	1	0	0	1
04:15 PM	0	1	0	0	0	0	0	1	0	1	0	0	3
04:30 PM	0	1	0	0	0	0	0	0	0	1	0	0	2
04:45 PM	0	1	0	0	0	0	0	0	0	0	0	0	1
Total	0	3	0	0	0	0	0	1	0	3	0	0	7
05:15 PM	0	0	0	0	0	0	0	0	0	1	0	2	3
05:30 PM	0	1	0	0	0	0	1	1	0	0	0	0	3
05:45 PM	0	0	0	0	0	0	0	0	0	0	0	2	2
Total	0	1	0	0	0	0	1	1	0	1	0	4	8
Grand Total	0	20	28	0	0	0	3	17	0	29	0	24	121
Apprch %	0	41.7	58.3	0	0	0	15	85	0	54.7	0	45.3	
Total %	0	16.5	23.1	0	0	0	2.5	14	0	24	0	19.8	

CITY TRAFFIC COUNTERS

626.991.7522

www.ctcounters.com

File Name : SanFernando_118EBRamps_3axle
Site Code : 00000000
Start Date : 3/25/2015
Page No : 2

	San Fernando Rd Southbound				Westbound				San Fernando Rd Northbound				118 EB On/Off Ramps Eastbound				
Start Time	Left	Thru	Right	App. Total	Left	Thru	Right	App. Total	Left	Thru	Right	App. Total	Left	Thru	Right	App. Total	Int. Total
Peak Hour Analysis From 07:00 AM to 09:45 AM - Peak 1 of 1																	
Peak Hour for Entire Intersection Begins at 08:00 AM																	
08:00 AM	0	1	2	**3**	0	0	0	0	0	**1**	0	**1**	1	0	1	2	**6**
08:15 AM	0	**2**	0	2	0	0	0	0	0	0	0	0	0	0	0	0	2
08:30 AM	0	0	**3**	3	0	0	0	0	0	1	0	1	0	0	1	1	5
08:45 AM	0	0	1	1	0	0	0	0	0	0	0	0	**2**	0	**2**	**4**	5
Total Volume	0	3	6	9	0	0	0	0	0	2	0	2	3	0	4	7	18
% App. Total	0	33.3	66.7		0	0	0		0	100	0		42.9	0	57.1		
PHF	.000	.375	.500	.750	.000	.000	.000	.000	.000	.500	.000	.500	.375	.000	.500	.438	.750

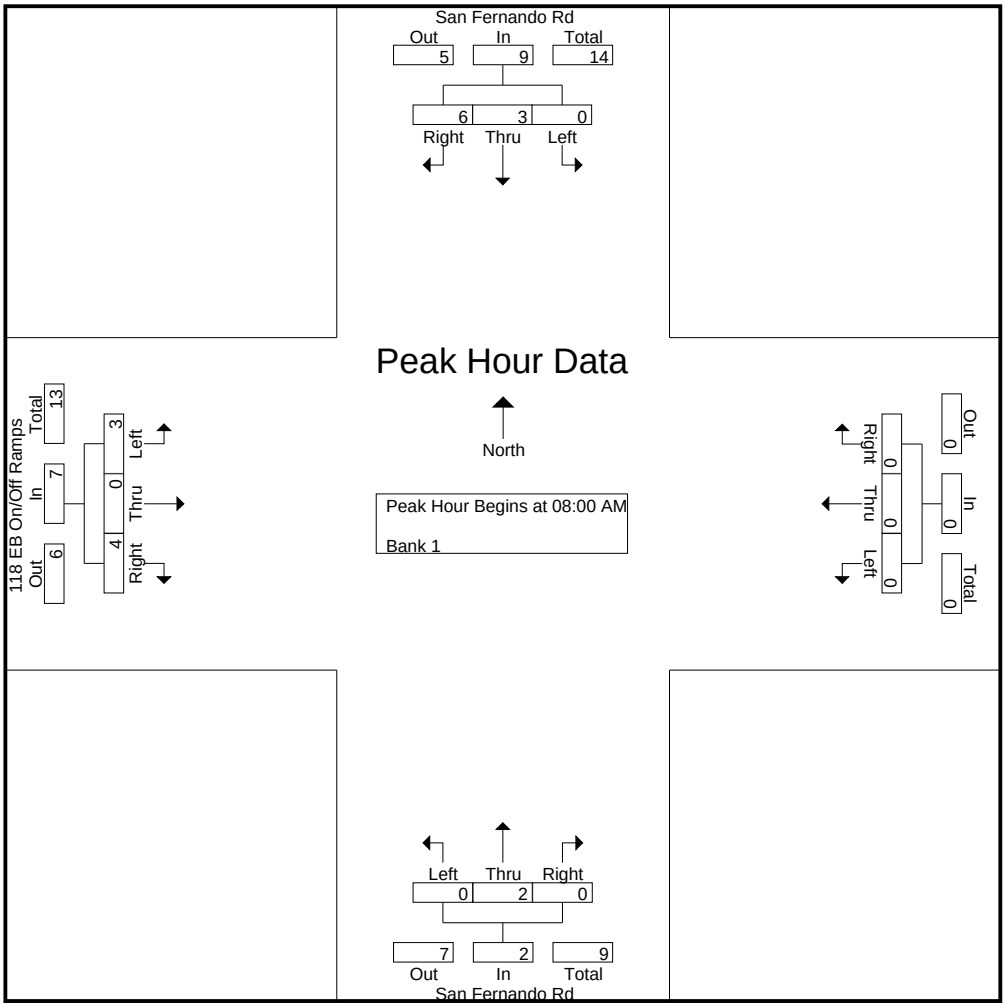

CITY TRAFFIC COUNTERS

626.991.7522

www.ctcounters.com

File Name : SanFernando_118EBRamps_3axle
Site Code : 00000000
Start Date : 3/25/2015
Page No : 3

	San Fernando Rd Southbound				Westbound				San Fernando Rd Northbound				118 EB On/Off Ramps Eastbound				
Start Time	Left	Thru	Right	App. Total	Left	Thru	Right	App. Total	Left	Thru	Right	App. Total	Left	Thru	Right	App. Total	Int. Total
Peak Hour Analysis From 10:00 AM to 01:45 PM - Peak 1 of 1																	
Peak Hour for Entire Intersection Begins at 12:15 PM																	
12:15 PM	0	1	2	3	0	0	0	0	0	1	0	1	**3**	0	0	**3**	7
12:30 PM	0	**2**	2	4	0	0	0	0	0	1	0	1	1	0	0	1	6
12:45 PM	0	2	0	2	0	0	0	0	0	**2**	0	**2**	0	0	0	0	4
01:00 PM	0	2	**3**	**5**	0	0	0	0	0	2	0	2	2	0	**1**	3	**10**
Total Volume	0	7	7	14	0	0	0	0	0	6	0	6	6	0	1	7	27
% App. Total	0	50	50		0	0	0		0	100	0		85.7	0	14.3		
PHF	.000	.875	.583	.700	.000	.000	.000	.000	.000	.750	.000	.750	.500	.000	.250	.583	.675

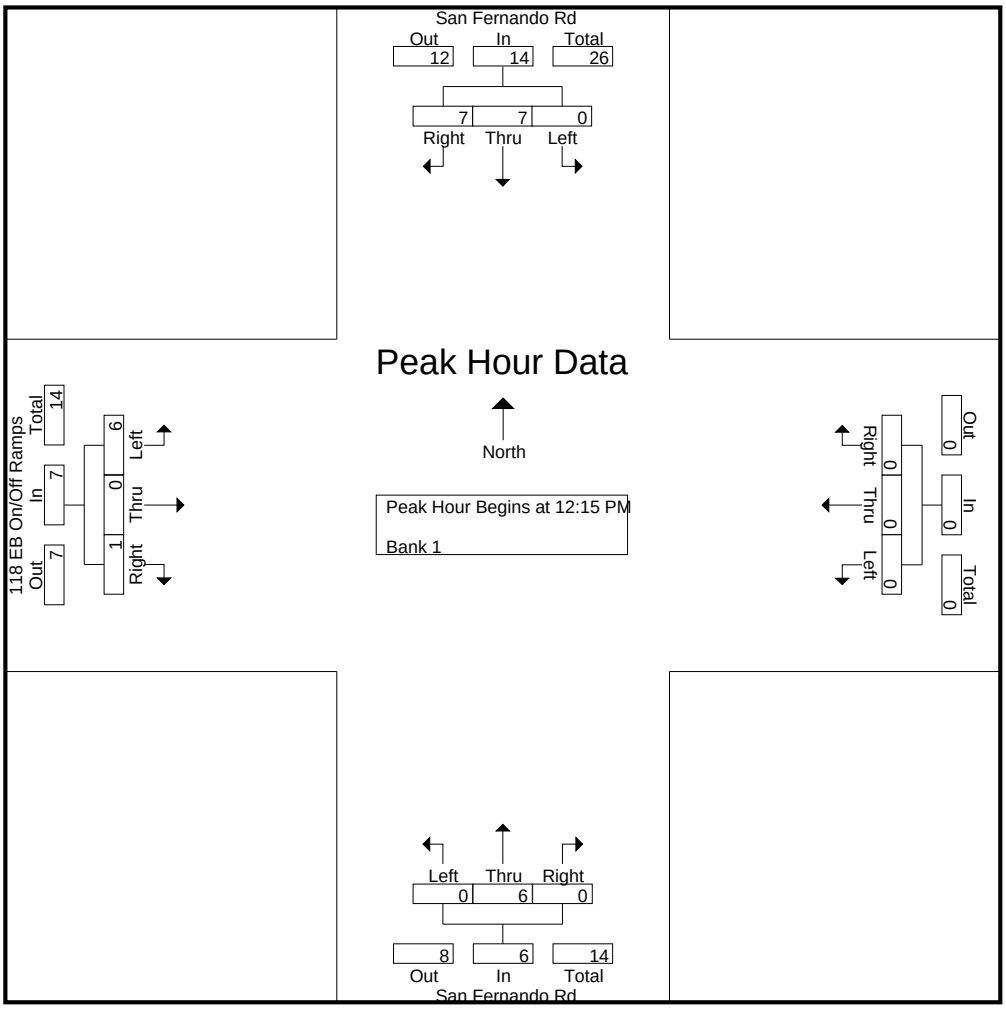

CITY TRAFFIC COUNTERS

626.991.7522

www.ctcounters.com

File Name : SanFernando_118EBRamps_3axle
Site Code : 00000000
Start Date : 3/25/2015
Page No : 4

	San Fernando Rd Southbound				Westbound				San Fernando Rd Northbound				118 EB On/Off Ramps Eastbound				
Start Time	Left	Thru	Right	App. Total	Left	Thru	Right	App. Total	Left	Thru	Right	App. Total	Left	Thru	Right	App. Total	Int. Total
Peak Hour Analysis From 02:00 PM to 05:45 PM - Peak 1 of 1																	
Peak Hour for Entire Intersection Begins at 03:00 PM																	
03:00 PM	0	0	**2**	2	0	0	0	0	0	0	0	0	2	0	0	2	4
03:15 PM	0	**1**	2	**3**	0	0	0	0	0	0	0	0	**3**	0	1	**4**	**7**
03:30 PM	0	1	0	1	0	0	0	0	**1**	0	0	**1**	2	0	0	2	4
03:45 PM	0	0	0	0	0	0	0	0	0	0	0	0	0	0	**4**	4	4
Total Volume	0	2	4	6	0	0	0	0	1	0	0	1	7	0	5	12	19
% App. Total	0	33.3	66.7		0	0	0		100	0	0		58.3	0	41.7		
PHF	.000	.500	.500	.500	.000	.000	.000	.000	.250	.000	.000	.250	.583	.000	.313	.750	.679

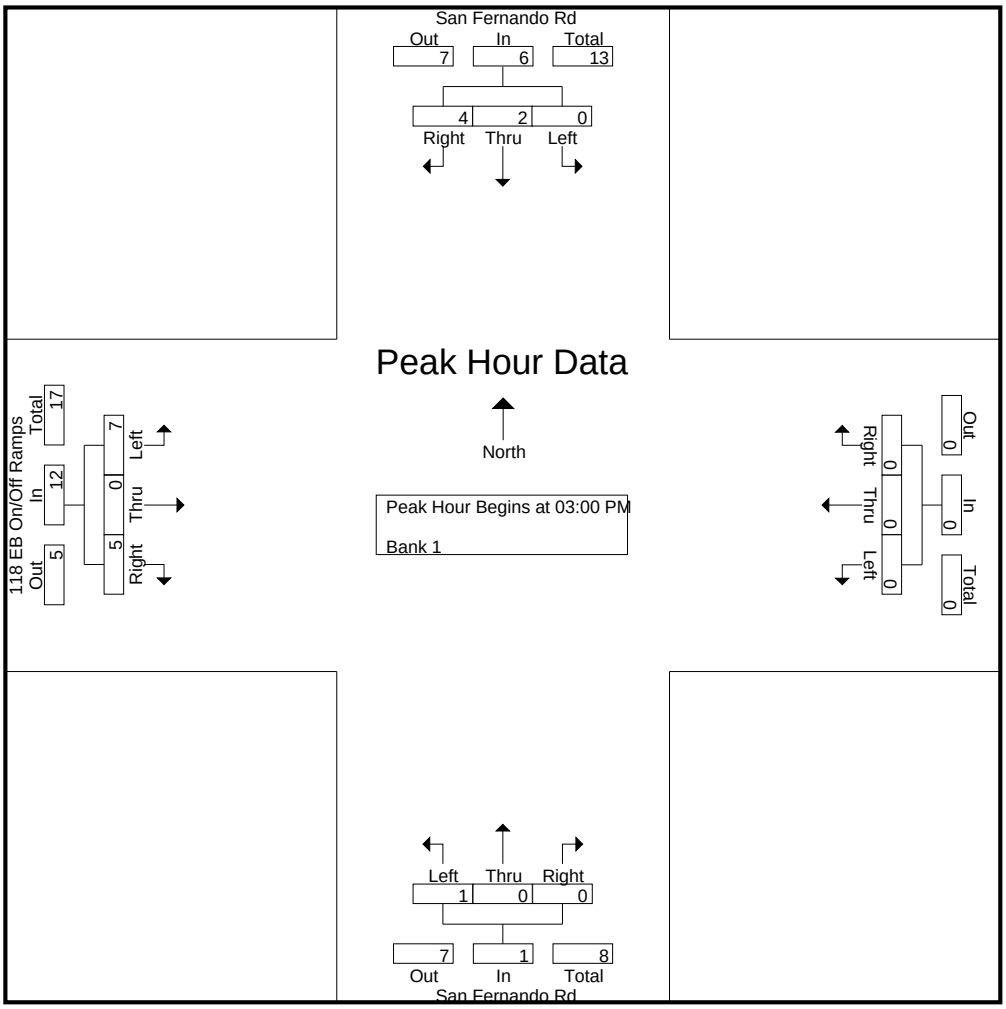

CITY TRAFFIC COUNTERS

626.991.7522

www.ctcounters.com

File Name : SanFernando_118EBRamps_4axle
Site Code : 00000000
Start Date : 3/25/2015
Page No : 1

Groups Printed- Bank 2

	San Fernando Rd Southbound			Westbound			San Fernando Rd Northbound			118 EB On/Off Ramps Eastbound			
Start Time	Left	Thru	Right	Left	Thru	Right	Left	Thru	Right	Left	Thru	Right	Int. Total
07:00 AM	0	0	0	0	0	0	0	0	0	0	0	2	2
07:15 AM	0	0	0	0	0	0	0	0	0	0	0	1	1
07:45 AM	0	0	1	0	0	0	0	0	0	0	0	0	1
Total	0	0	1	0	0	0	0	0	0	0	0	3	4
08:15 AM	0	1	0	0	0	0	0	0	0	1	0	0	2
08:45 AM	0	1	0	0	0	0	0	0	0	0	0	0	1
Total	0	2	0	0	0	0	0	0	0	1	0	0	3
09:15 AM	0	1	0	0	0	0	0	0	0	0	0	0	1
09:30 AM	0	0	0	0	0	0	0	1	0	0	0	0	1
Total	0	1	0	0	0	0	0	1	0	0	0	0	2
12:00 PM	0	1	0	0	0	0	0	0	0	1	0	0	2
12:15 PM	0	1	0	0	0	0	0	0	0	0	0	0	1
12:30 PM	0	1	0	0	0	0	0	0	0	0	0	0	1
Total	0	3	0	0	0	0	0	0	0	1	0	0	4
01:30 PM	0	1	0	0	0	0	0	2	0	0	0	0	3
01:45 PM	0	1	1	0	0	0	0	1	0	1	0	0	4
Total	0	2	1	0	0	0	0	3	0	1	0	0	7
03:15 PM	0	0	0	0	0	0	0	1	0	0	0	0	1
03:45 PM	0	0	1	0	0	0	0	0	0	0	0	0	1
Total	0	0	1	0	0	0	0	1	0	0	0	0	2
04:00 PM	0	0	1	0	0	0	0	1	0	1	0	0	3
04:15 PM	0	0	1	0	0	0	0	0	0	0	0	0	1
04:30 PM	0	0	0	0	0	0	0	0	0	1	0	0	1
04:45 PM	0	0	0	0	0	0	0	1	0	0	0	0	1
Total	0	0	2	0	0	0	0	2	0	2	0	0	6
05:00 PM	0	0	1	0	0	0	0	0	0	0	0	0	1
Total	0	0	1	0	0	0	0	0	0	0	0	0	1
Grand Total	0	8	6	0	0	0	0	7	0	5	0	3	29
Apprch %	0	57.1	42.9	0	0	0	0	100	0	62.5	0	37.5	
Total %	0	27.6	20.7	0	0	0	0	24.1	0	17.2	0	10.3	

CITY TRAFFIC COUNTERS

626.991.7522

www.ctcounters.com

File Name : SanFernando_118EBRamps_4axle
Site Code : 00000000
Start Date : 3/25/2015
Page No : 2

	San Fernando Rd Southbound				Westbound				San Fernando Rd Northbound				118 EB On/Off Ramps Eastbound				
Start Time	Left	Thru	Right	App. Total	Left	Thru	Right	App. Total	Left	Thru	Right	App. Total	Left	Thru	Right	App. Total	Int. Total
Peak Hour Analysis From 07:00 AM to 09:45 AM - Peak 1 of 1																	
Peak Hour for Entire Intersection Begins at 07:00 AM																	
07:00 AM	0	0	0	0	0	0	0	0	0	0	0	0	0	0	**2**	**2**	**2**
07:15 AM	0	0	0	0	0	0	0	0	0	0	0	0	0	0	1	1	1
07:30 AM	0	0	0	0	0	0	0	0	0	0	0	0	0	0	0	0	0
07:45 AM	0	0	**1**	**1**	0	0	0	0	0	0	0	0	0	0	0	0	1
Total Volume	0	0	1	1	0	0	0	0	0	0	0	0	0	0	3	3	4
% App. Total	0	0	100		0	0	0		0	0	0		0	0	100		
PHF	.000	.000	.250	.250	.000	.000	.000	.000	.000	.000	.000	.000	.000	.000	.375	.375	.500

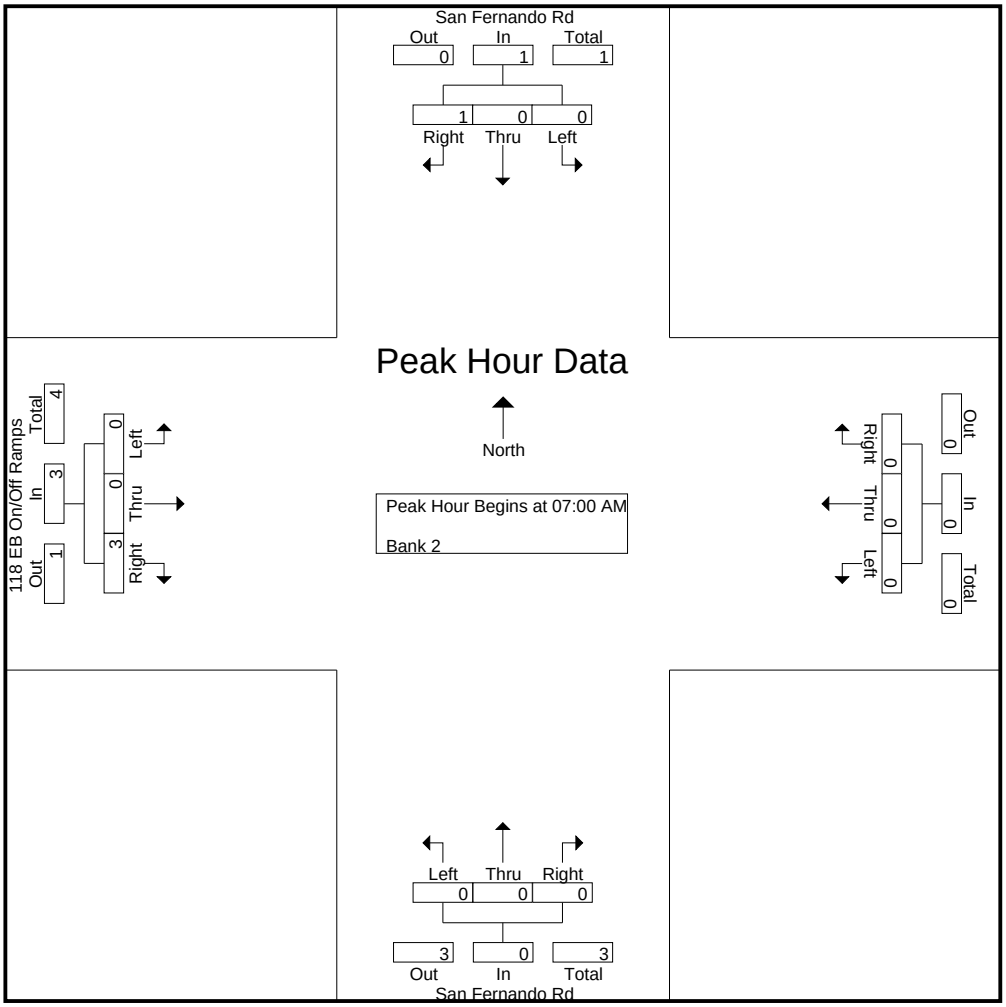

CITY TRAFFIC COUNTERS

626.991.7522

www.ctcounters.com

File Name : SanFernando_118EBRamps_4axle
Site Code : 00000000
Start Date : 3/25/2015
Page No : 3

	San Fernando Rd Southbound				Westbound				San Fernando Rd Northbound				118 EB On/Off Ramps Eastbound				
Start Time	Left	Thru	Right	App. Total	Left	Thru	Right	App. Total	Left	Thru	Right	App. Total	Left	Thru	Right	App. Total	Int. Total
Peak Hour Analysis From 10:00 AM to 01:45 PM - Peak 1 of 1																	
Peak Hour for Entire Intersection Begins at 01:00 PM																	
01:00 PM	0	0	0	0	0	0	0	0	0	0	0	0	0	0	0	0	0
01:15 PM	0	0	0	0	0	0	0	0	0	0	0	0	0	0	0	0	0
01:30 PM	0	**1**	0	1	0	0	0	0	0	**2**	0	**2**	0	0	0	0	3
01:45 PM	0	1	**1**	**2**	0	0	0	0	0	1	0	1	**1**	0	0	**1**	**4**
Total Volume	0	2	1	3	0	0	0	0	0	3	0	3	1	0	0	1	7
% App. Total	0	66.7	33.3		0	0	0		0	100	0		100	0	0		
PHF	.000	.500	.250	.375	.000	.000	.000	.000	.000	.375	.000	.375	.250	.000	.000	.250	.438

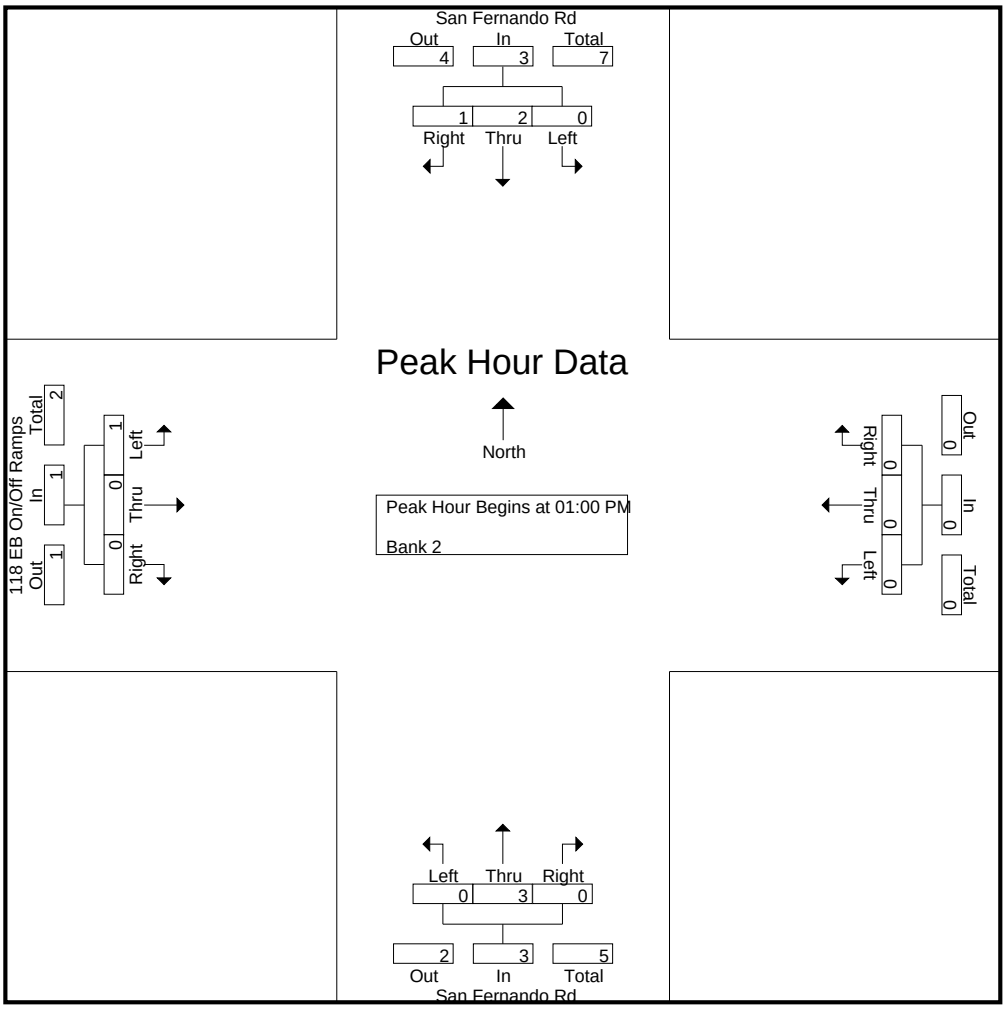

CITY TRAFFIC COUNTERS

626.991.7522

www.ctcounters.com

File Name : SanFernando_118EBRamps_4axle
Site Code : 00000000
Start Date : 3/25/2015
Page No : 4

	San Fernando Rd Southbound				Westbound				San Fernando Rd Northbound				118 EB On/Off Ramps Eastbound				
Start Time	Left	Thru	Right	App. Total	Left	Thru	Right	App. Total	Left	Thru	Right	App. Total	Left	Thru	Right	App. Total	Int. Total
Peak Hour Analysis From 02:00 PM to 05:45 PM - Peak 1 of 1																	
Peak Hour for Entire Intersection Begins at 03:45 PM																	
03:45 PM	0	0	**1**	**1**	0	0	0	0	0	0	0	0	0	0	0	0	1
04:00 PM	0	0	1	1	0	0	0	0	0	**1**	0	**1**	**1**	0	0	**1**	**3**
04:15 PM	0	0	1	1	0	0	0	0	0	0	0	0	0	0	0	0	1
04:30 PM	0	0	0	0	0	0	0	0	0	0	0	0	1	0	0	1	1
Total Volume	0	0	3	3	0	0	0	0	0	1	0	1	2	0	0	2	6
% App. Total	0	0	100		0	0	0		0	100	0		100	0	0		
PHF	.000	.000	.750	.750	.000	.000	.000	.000	.000	.250	.000	.250	.500	.000	.000	.500	.500

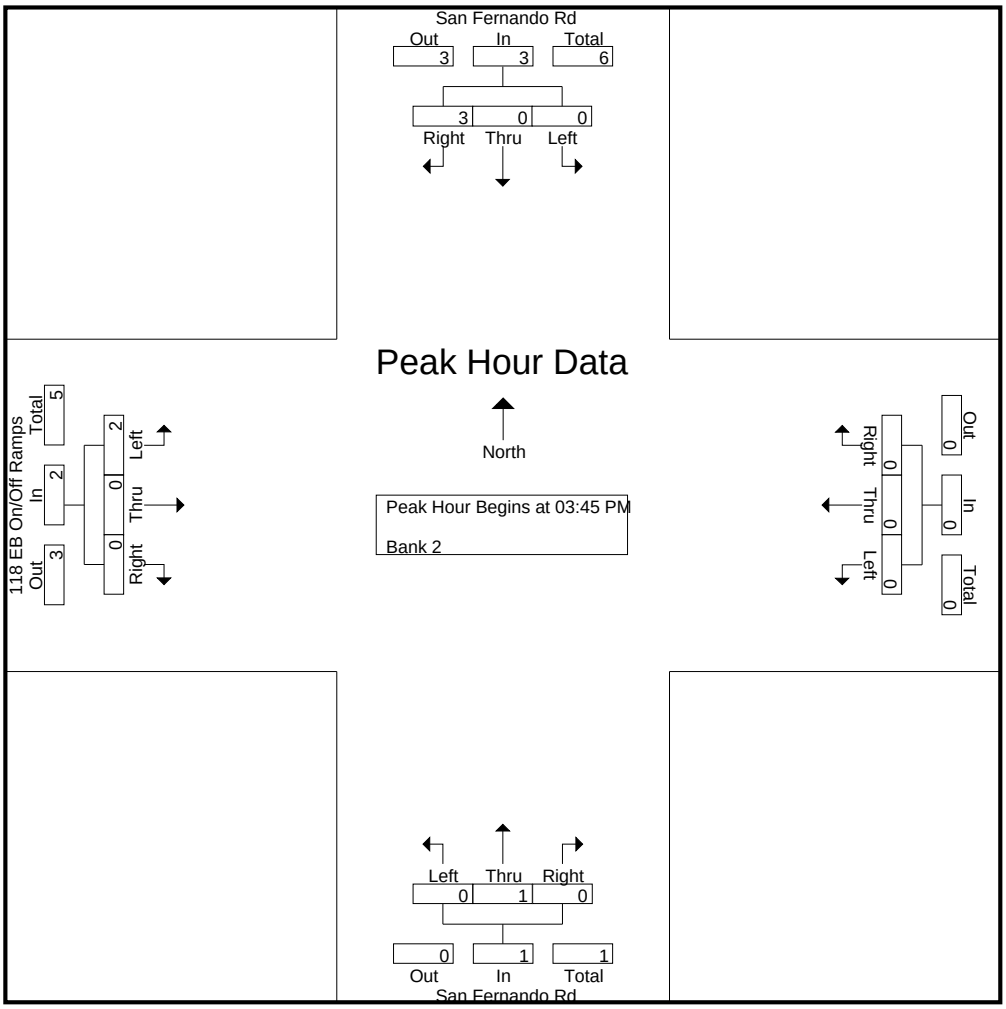

CITY TRAFFIC COUNTERS

626.991.7522

www.ctcounters.com

File Name : SanFernando_118EBRamps_5axle
Site Code : 00000000
Start Date : 3/25/2015
Page No : 1

Groups Printed- Unshifted

	San Fernando Rd Southbound			Westbound			San Fernando Rd Northbound			118 EB On/Off Ramps Eastbound			
Start Time	Left	Thru	Right	Left	Thru	Right	Left	Thru	Right	Left	Thru	Right	Int. Total
07:00 AM	0	0	0	0	0	0	0	1	0	0	0	1	2
07:15 AM	1	1	1	0	0	0	1	0	0	0	0	4	8
07:30 AM	0	1	1	0	0	0	0	0	0	0	0	1	3
07:45 AM	0	2	1	0	0	0	1	0	0	1	0	2	7
Total	1	4	3	0	0	0	2	1	0	1	0	8	20
08:00 AM	0	4	0	0	0	0	0	0	0	0	0	1	5
08:15 AM	0	1	2	0	0	0	0	1	0	1	0	3	8
08:30 AM	0	0	1	0	0	0	0	2	0	1	0	1	5
08:45 AM	0	1	1	0	0	0	1	0	0	1	0	0	4
Total	0	6	4	0	0	0	1	3	0	3	0	5	22
09:00 AM	0	1	1	0	0	0	0	2	0	1	0	1	6
09:15 AM	0	1	1	0	0	0	0	1	0	2	0	1	6
09:30 AM	0	1	1	0	0	0	0	0	0	0	0	2	4
09:45 AM	0	1	0	0	0	0	0	0	0	0	0	2	3
Total	0	4	3	0	0	0	0	3	0	3	0	6	19
12:00 PM	0	1	1	0	0	0	0	1	0	1	0	0	4
12:15 PM	0	1	0	0	0	0	0	0	0	1	0	0	2
12:30 PM	0	1	1	0	0	0	0	0	0	0	0	1	3
12:45 PM	0	0	2	0	0	0	1	0	0	1	0	1	5
Total	0	3	4	0	0	0	1	1	0	3	0	2	14
01:00 PM	0	0	1	0	0	0	0	1	0	1	0	1	4
01:15 PM	0	1	2	0	0	0	0	1	0	1	0	0	5
01:30 PM	0	1	1	0	0	0	0	0	0	1	0	0	3
01:45 PM	0	0	2	0	0	0	1	1	0	1	0	0	5
Total	0	2	6	0	0	0	1	3	0	4	0	1	17
03:00 PM	0	0	0	0	0	0	0	1	0	1	0	2	4
03:15 PM	0	0	0	0	0	0	0	0	0	0	0	3	3
03:30 PM	0	0	0	0	0	0	1	1	0	0	0	0	2
03:45 PM	0	1	0	0	0	0	0	1	0	1	0	1	4
Total	0	1	0	0	0	0	1	3	0	2	0	6	13
04:00 PM	0	0	0	0	0	0	0	1	0	0	0	0	1
04:15 PM	0	2	0	0	0	0	0	0	0	0	0	0	2
04:45 PM	0	0	1	0	0	0	0	1	0	0	0	0	2
Total	0	2	1	0	0	0	0	2	0	0	0	0	5
05:15 PM	0	1	0	0	0	0	0	0	0	0	0	0	1
05:45 PM	0	0	0	0	0	0	1	0	0	1	0	1	3
Total	0	1	0	0	0	0	1	0	0	1	0	1	4
Grand Total	1	23	21	0	0	0	7	16	0	17	0	29	114
Apprch %	2.2	51.1	46.7	0	0	0	30.4	69.6	0	37	0	63	
Total %	0.9	20.2	18.4	0	0	0	6.1	14	0	14.9	0	25.4	

CITY TRAFFIC COUNTERS

626.991.7522

www.ctcounters.com

File Name : SanFernando_118EBRamps_5axle
Site Code : 00000000
Start Date : 3/25/2015
Page No : 2

	San Fernando Rd Southbound				Westbound				San Fernando Rd Northbound				118 EB On/Off Ramps Eastbound				
Start Time	Left	Thru	Right	App. Total	Left	Thru	Right	App. Total	Left	Thru	Right	App. Total	Left	Thru	Right	App. Total	Int. Total
Peak Hour Analysis From 07:00 AM to 09:45 AM - Peak 1 of 1																	
Peak Hour for Entire Intersection Begins at 07:45 AM																	
07:45 AM	0	2	1	3	0	0	0	0	**1**	0	0	1	**1**	0	2	3	7
08:00 AM	0	**4**	0	**4**	0	0	0	0	0	0	0	0	0	0	1	1	5
08:15 AM	0	1	**2**	3	0	0	0	0	0	1	0	1	1	0	**3**	**4**	**8**
08:30 AM	0	0	1	1	0	0	0	0	0	**2**	0	**2**	1	0	1	2	5
Total Volume	0	7	4	11	0	0	0	0	1	3	0	4	3	0	7	10	25
% App. Total	0	63.6	36.4		0	0	0		25	75	0		30	0	70		
PHF	.000	.438	.500	.688	.000	.000	.000	.000	.250	.375	.000	.500	.750	.000	.583	.625	.781

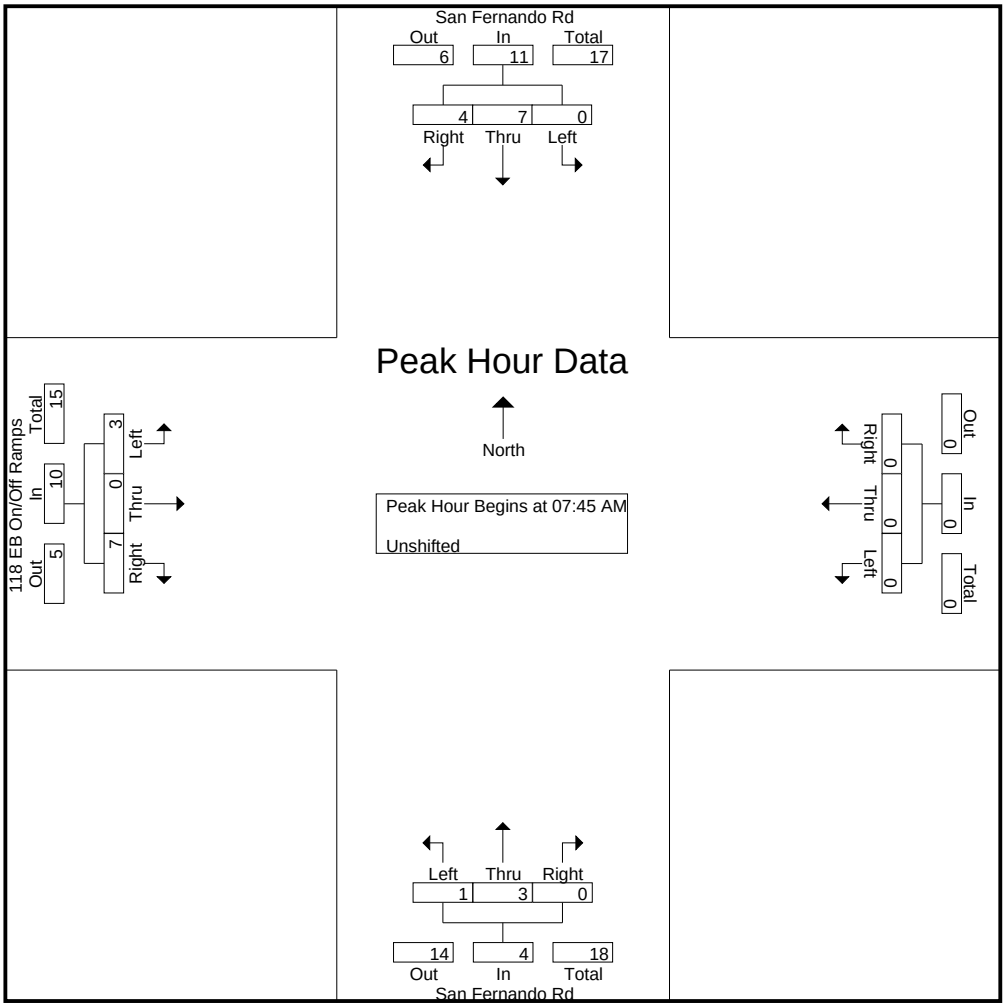

CITY TRAFFIC COUNTERS

626.991.7522

www.ctcounters.com

File Name : SanFernando_118EBRamps_5axle
Site Code : 00000000
Start Date : 3/25/2015
Page No : 3

	San Fernando Rd Southbound				Westbound				San Fernando Rd Northbound				118 EB On/Off Ramps Eastbound				
Start Time	Left	Thru	Right	App. Total	Left	Thru	Right	App. Total	Left	Thru	Right	App. Total	Left	Thru	Right	App. Total	Int. Total
Peak Hour Analysis From 10:00 AM to 01:45 PM - Peak 1 of 1																	
Peak Hour for Entire Intersection Begins at 12:30 PM																	
12:30 PM	0	**1**	1	2	0	0	0	0	0	0	0	0	0	0	**1**	1	3
12:45 PM	0	0	**2**	2	0	0	0	0	**1**	0	0	**1**	**1**	0	1	**2**	**5**
01:00 PM	0	0	1	1	0	0	0	0	0	**1**	0	1	1	0	1	2	4
01:15 PM	0	1	2	**3**	0	0	0	0	0	1	0	1	1	0	0	1	5
Total Volume	0	2	6	8	0	0	0	0	1	2	0	3	3	0	3	6	17
% App. Total	0	25	75		0	0	0		33.3	66.7	0		50	0	50		
PHF	.000	.500	.750	.667	.000	.000	.000	.000	.250	.500	.000	.750	.750	.000	.750	.750	.850

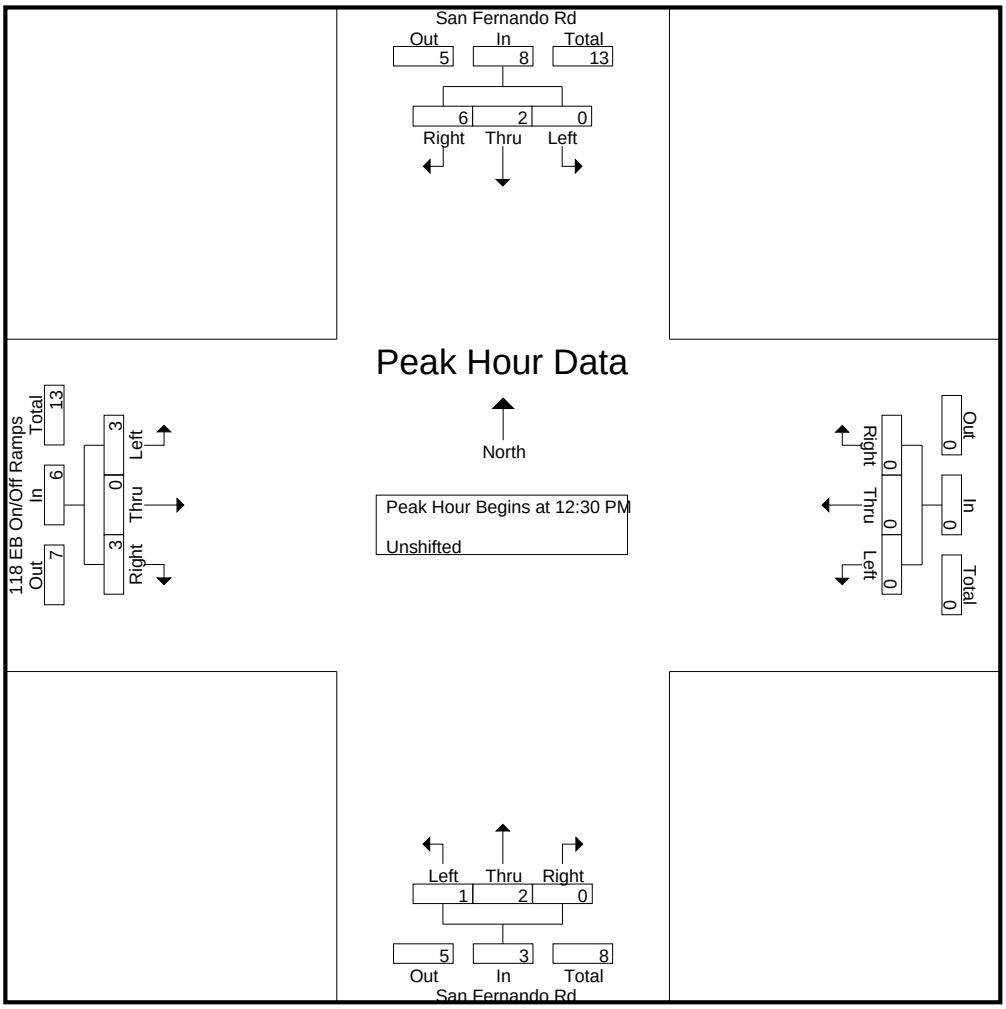

CITY TRAFFIC COUNTERS

626.991.7522

www.ctcounters.com

File Name : SanFernando_118EBRamps_5axle
Site Code : 00000000
Start Date : 3/25/2015
Page No : 4

	San Fernando Rd Southbound				Westbound				San Fernando Rd Northbound				118 EB On/Off Ramps Eastbound				
Start Time	Left	Thru	Right	App. Total	Left	Thru	Right	App. Total	Left	Thru	Right	App. Total	Left	Thru	Right	App. Total	Int. Total
Peak Hour Analysis From 02:00 PM to 05:45 PM - Peak 1 of 1																	
Peak Hour for Entire Intersection Begins at 03:00 PM																	
03:00 PM	0	0	0	0	0	0	0	0	0	**1**	0	1	**1**	0	2	**3**	**4**
03:15 PM	0	0	0	0	0	0	0	0	0	0	0	0	0	0	**3**	3	3
03:30 PM	0	0	0	0	0	0	0	0	**1**	1	0	**2**	0	0	0	0	2
03:45 PM	0	**1**	0	**1**	0	0	0	0	0	1	0	1	1	0	1	2	4
Total Volume	0	1	0	1	0	0	0	0	1	3	0	4	2	0	6	8	13
% App. Total	0	100	0		0	0	0		25	75	0		25	0	75		
PHF	.000	.250	.000	.250	.000	.000	.000	.000	.250	.750	.000	.500	.500	.000	.500	.667	.813

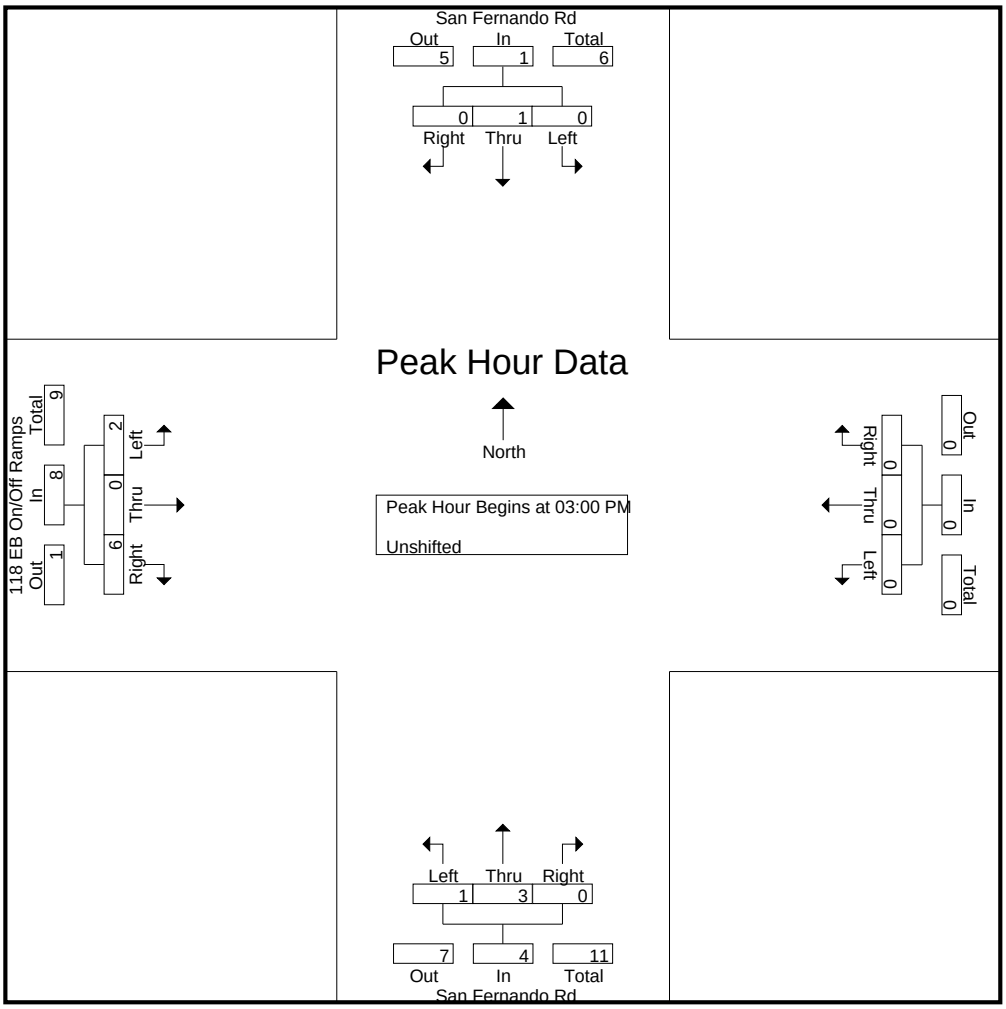

CITY TRAFFIC COUNTERS

626.991.7522

www.ctcounters.com

File Name : SanFernando_VanNuys
Site Code : 00000000
Start Date : 3/25/2015
Page No : 1

Groups Printed- Unshifted

	San Fernando Rd Southbound			Van Nuys Blvd Westbound			San Fernando Rd Northbound			Van Nuys Blvd Eastbound			
Start Time	Left	Thru	Right	Left	Thru	Right	Left	Thru	Right	Left	Thru	Right	Int. Total
07:00 AM	11	159	12	22	177	14	1	71	17	21	126	8	639
07:15 AM	34	222	22	51	235	18	7	119	31	27	208	8	982
07:30 AM	29	221	10	54	150	19	6	115	47	29	213	10	903
07:45 AM	50	193	10	58	187	32	4	99	37	22	217	11	920
Total	124	795	54	185	749	83	18	404	132	99	764	37	3444
08:00 AM	33	195	15	34	164	18	8	92	10	25	167	10	771
08:15 AM	15	185	18	31	158	18	4	85	21	20	160	12	727
08:30 AM	23	128	26	22	162	14	5	73	17	20	139	13	642
08:45 AM	18	141	26	21	132	7	14	58	6	30	189	20	662
Total	89	649	85	108	616	57	31	308	54	95	655	55	2802
09:00 AM	6	119	17	22	144	21	9	62	7	32	176	11	626
09:15 AM	17	96	34	17	114	9	3	68	21	17	111	18	525
09:30 AM	39	79	23	15	104	6	16	68	4	30	141	23	548
09:45 AM	21	95	31	12	119	14	12	61	15	32	136	24	572
Total	83	389	105	66	481	50	40	259	47	111	564	76	2271
12:00 PM	21	90	24	9	159	27	9	74	23	30	176	19	661
12:15 PM	28	84	37	14	126	26	15	91	19	37	180	24	681
12:30 PM	17	99	18	17	141	8	11	90	25	16	147	18	607
12:45 PM	14	90	28	16	130	6	15	122	13	26	134	19	613
Total	80	363	107	56	556	67	50	377	80	109	637	80	2562
01:00 PM	26	134	15	18	124	8	14	85	7	21	132	20	604
01:15 PM	20	105	23	15	103	15	26	80	14	18	160	21	600
01:30 PM	19	111	36	17	135	35	11	81	21	41	123	24	654
01:45 PM	22	103	35	12	113	16	19	90	10	29	128	20	597
Total	87	453	109	62	475	74	70	336	52	109	543	85	2455
03:00 PM	20	119	41	15	227	47	10	94	23	28	217	10	851
03:15 PM	46	121	42	27	182	25	14	129	24	23	181	17	831
03:30 PM	30	126	32	28	205	15	24	129	19	43	161	19	831
03:45 PM	22	127	52	32	208	21	18	131	21	24	175	24	855
Total	118	493	167	102	822	108	66	483	87	118	734	70	3368
04:00 PM	44	118	33	28	207	35	23	134	28	18	230	26	924
04:15 PM	26	117	28	25	178	22	12	139	17	12	146	28	750
04:30 PM	22	138	32	16	236	19	18	153	15	19	230	28	926
04:45 PM	29	138	35	18	143	14	20	141	20	25	174	21	778
Total	121	511	128	87	764	90	73	567	80	74	780	103	3378
05:00 PM	25	112	39	30	171	27	17	123	28	36	197	30	835
05:15 PM	32	121	38	22	187	7	10	159	30	18	227	28	879
05:30 PM	17	110	29	21	142	10	4	139	27	18	213	17	747
05:45 PM	19	112	28	27	146	9	5	129	19	21	173	19	707
Total	93	455	134	100	646	53	36	550	104	93	810	94	3168
Grand Total	795	4108	889	766	5109	582	384	3284	636	808	5487	600	23448
Apprch %	13.7	70.9	15.3	11.9	79.1	9	8.9	76.3	14.8	11.7	79.6	8.7	
Total %	3.4	17.5	3.8	3.3	21.8	2.5	1.6	14	2.7	3.4	23.4	2.6	

CITY TRAFFIC COUNTERS

626.991.7522

www.ctcounters.com

File Name : SanFernando_VanNuys
Site Code : 00000000
Start Date : 3/25/2015
Page No : 2

	San Fernando Rd Southbound				Van Nuys Blvd Westbound				San Fernando Rd Northbound				Van Nuys Blvd Eastbound				
Start Time	Left	Thru	Right	App. Total	Left	Thru	Right	App. Total	Left	Thru	Right	App. Total	Left	Thru	Right	App. Total	Int. Total
Peak Hour Analysis From 07:00 AM to 09:45 AM - Peak 1 of 1																	
Peak Hour for Entire Intersection Begins at 07:15 AM																	
07:15 AM	34	**222**	**22**	**278**	51	**235**	18	**304**	7	**119**	31	157	27	208	8	243	**982**
07:30 AM	29	221	10	260	54	150	19	223	6	115	**47**	**168**	**29**	213	10	**252**	903
07:45 AM	**50**	193	10	253	**58**	187	**32**	277	4	99	37	140	22	**217**	**11**	250	920
08:00 AM	33	195	15	243	34	164	18	216	**8**	92	10	110	25	167	10	202	771
Total Volume	146	831	57	1034	197	736	87	1020	25	425	125	575	103	805	39	947	3576
% App. Total	14.1	80.4	5.5		19.3	72.2	8.5		4.3	73.9	21.7		10.9	85	4.1		
PHF	.730	.936	.648	.930	.849	.783	.680	.839	.781	.893	.665	.856	.888	.927	.886	.939	.910

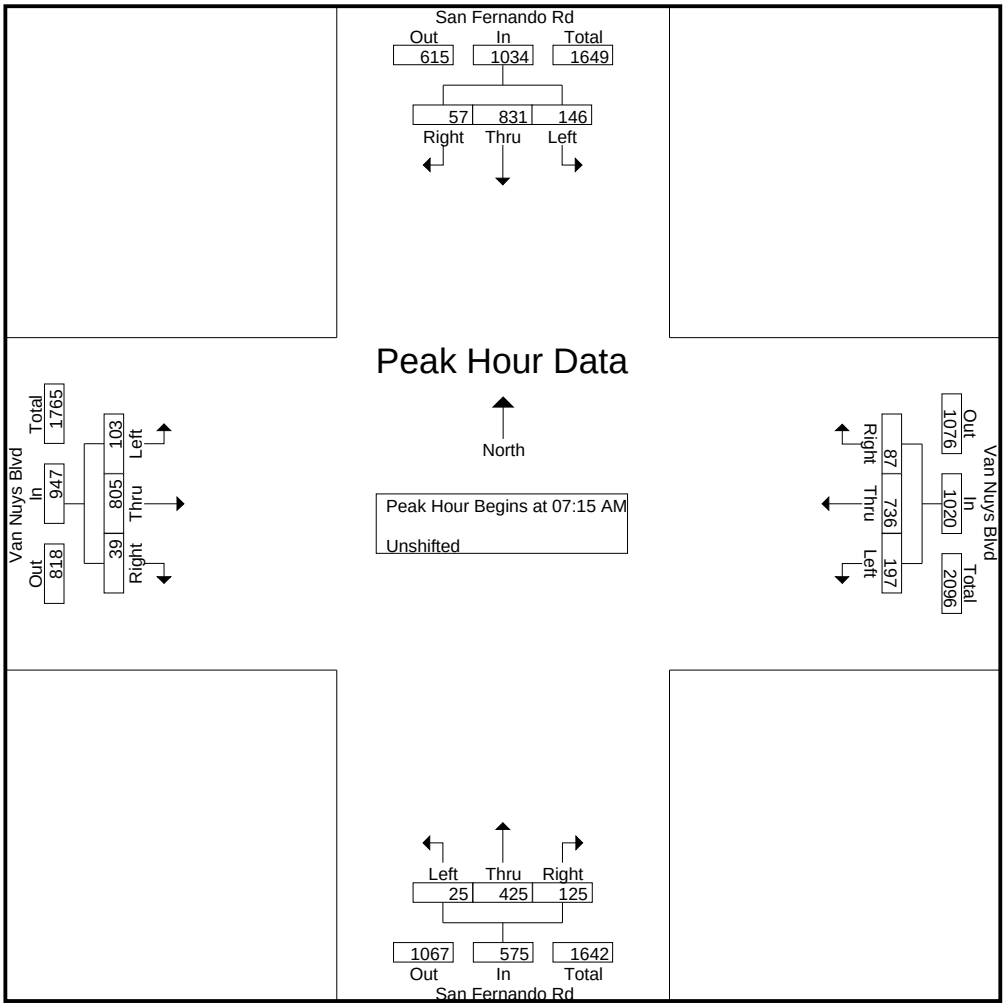

CITY TRAFFIC COUNTERS

626.991.7522

www.ctcounters.com

File Name : SanFernando_VanNuys
Site Code : 00000000
Start Date : 3/25/2015
Page No : 3

	San Fernando Rd Southbound				Van Nuys Blvd Westbound				San Fernando Rd Northbound				Van Nuys Blvd Eastbound				
Start Time	Left	Thru	Right	App. Total	Left	Thru	Right	App. Total	Left	Thru	Right	App. Total	Left	Thru	Right	App. Total	Int. Total
Peak Hour Analysis From 10:00 AM to 01:45 PM - Peak 1 of 1																	
Peak Hour for Entire Intersection Begins at 12:00 PM																	
12:00 PM	21	90	24	135	9	**159**	**27**	**195**	9	74	23	106	30	176	19	225	661
12:15 PM	**28**	84	**37**	**149**	14	126	26	166	**15**	91	19	125	**37**	**180**	**24**	**241**	**681**
12:30 PM	17	**99**	18	134	**17**	141	8	166	11	90	**25**	126	16	147	18	181	607
12:45 PM	14	90	28	132	16	130	6	152	15	**122**	13	**150**	26	134	19	179	613
Total Volume	80	363	107	550	56	556	67	679	50	377	80	507	109	637	80	826	2562
% App. Total	14.5	66	19.5		8.2	81.9	9.9		9.9	74.4	15.8		13.2	77.1	9.7		
PHF	.714	.917	.723	.923	.824	.874	.620	.871	.833	.773	.800	.845	.736	.885	.833	.857	.941

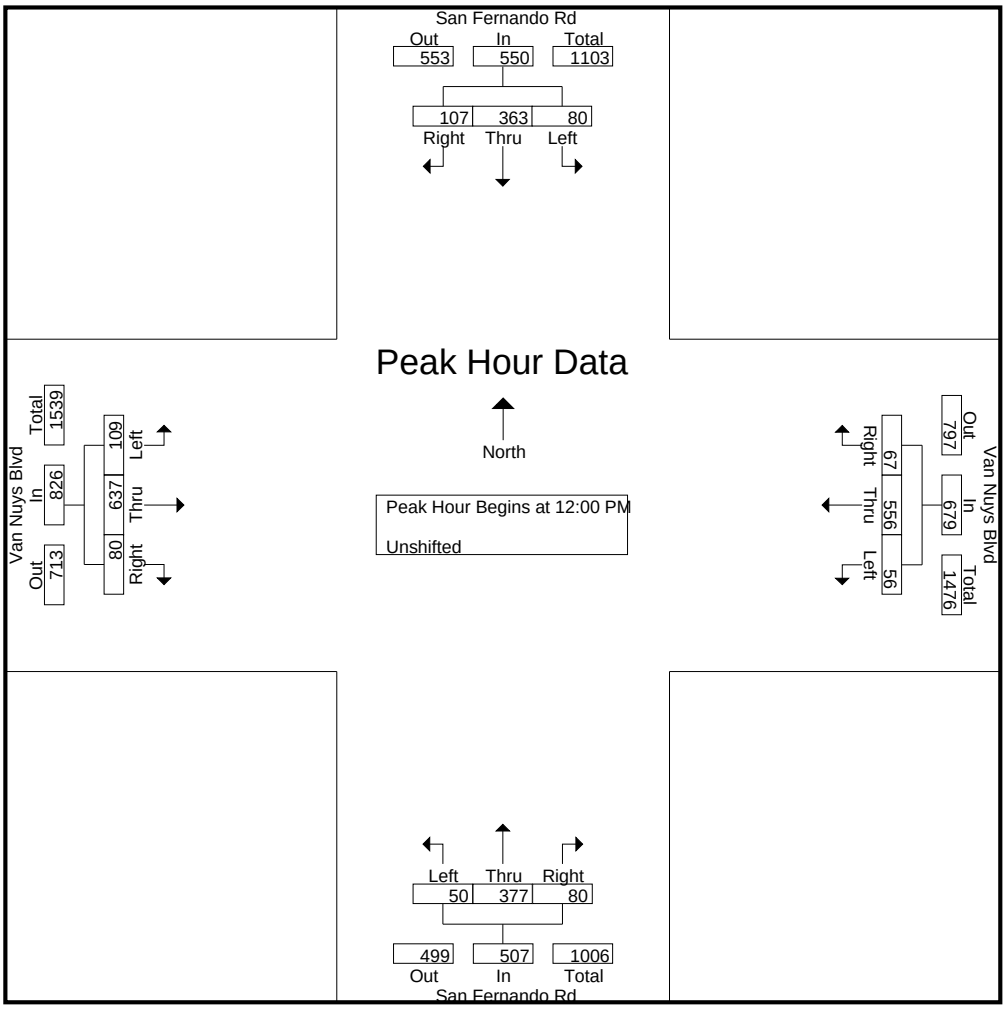

CITY TRAFFIC COUNTERS

626.991.7522

www.ctcounters.com

File Name : SanFernando_VanNuys
Site Code : 00000000
Start Date : 3/25/2015
Page No : 4

	San Fernando Rd Southbound				Van Nuys Blvd Westbound				San Fernando Rd Northbound				Van Nuys Blvd Eastbound				
Start Time	Left	Thru	Right	App. Total	Left	Thru	Right	App. Total	Left	Thru	Right	App. Total	Left	Thru	Right	App. Total	Int. Total
Peak Hour Analysis From 02:00 PM to 05:45 PM - Peak 1 of 1																	
Peak Hour for Entire Intersection Begins at 03:45 PM																	
03:45 PM	22	127	**52**	**201**	**32**	208	21	261	18	131	21	170	**24**	175	24	223	855
04:00 PM	**44**	118	33	195	28	207	**35**	270	**23**	134	**28**	185	18	**230**	26	274	924
04:15 PM	26	117	28	171	25	178	22	225	12	139	17	168	12	146	**28**	186	750
04:30 PM	22	**138**	32	192	16	**236**	19	**271**	18	**153**	15	**186**	19	230	28	**277**	**926**
Total Volume	114	500	145	759	101	829	97	1027	71	557	81	709	73	781	106	960	3455
% App. Total	15	65.9	19.1		9.8	80.7	9.4		10	78.6	11.4		7.6	81.4	11		
PHF	.648	.906	.697	.944	.789	.878	.693	.947	.772	.910	.723	.953	.760	.849	.946	.866	.933

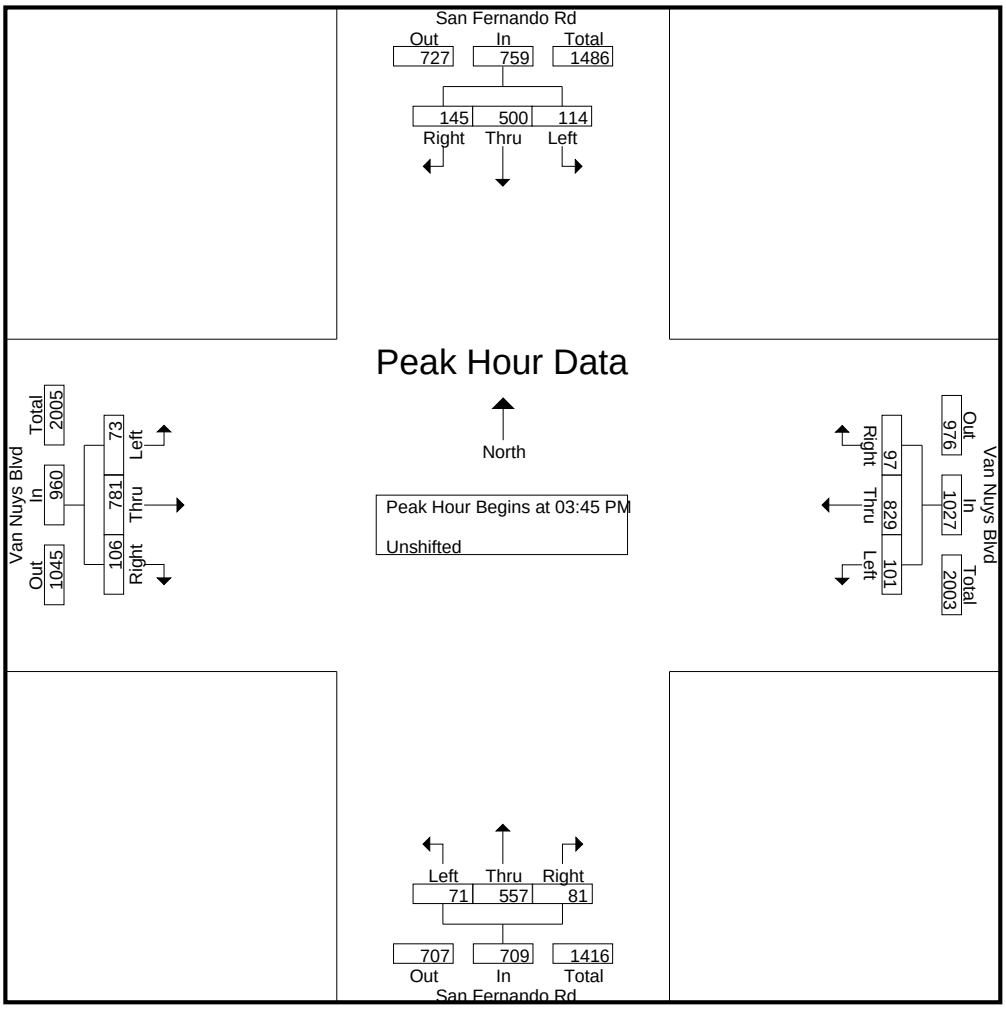

CITY TRAFFIC COUNTERS

626.991.7522

www.ctcounters.com

File Name : SanFernando_VanNuys_Motorcycles
Site Code : 00000000
Start Date : 3/25/2015
Page No : 1

Groups Printed- Bank 2

	San Fernando Rd Southbound			Van Nuys Blvd Westbound			San Fernando Rd Northbound			Van Nuys Blvd Eastbound			
Start Time	Left	Thru	Right	Left	Thru	Right	Left	Thru	Right	Left	Thru	Right	Int. Total
07:00 AM	0	0	0	0	0	0	0	1	0	0	0	0	1
07:15 AM	0	0	0	0	1	0	0	0	0	0	0	0	1
07:30 AM	0	0	0	0	0	0	0	1	0	0	0	0	1
07:45 AM	0	0	0	0	0	1	0	0	0	0	0	0	1
Total	0	0	0	0	1	1	0	2	0	0	0	0	4
08:30 AM	0	1	0	0	0	0	0	0	0	0	0	0	1
Total	0	1	0	0	0	0	0	0	0	0	0	0	1
09:00 AM	0	0	0	0	1	1	0	0	0	0	0	1	3
Total	0	0	0	0	1	1	0	0	0	0	0	1	3
12:15 PM	0	0	0	0	0	0	0	1	0	0	0	0	1
12:45 PM	0	1	0	0	0	0	0	1	0	0	0	0	2
Total	0	1	0	0	0	0	0	2	0	0	0	0	3
01:30 PM	0	0	0	0	0	0	0	1	0	0	0	0	1
Total	0	0	0	0	0	0	0	1	0	0	0	0	1
03:00 PM	0	1	0	0	0	0	0	1	0	0	0	0	2
03:15 PM	0	0	0	0	0	0	0	1	0	0	0	0	1
03:30 PM	0	0	0	0	0	0	0	1	0	0	0	0	1
Total	0	1	0	0	0	0	0	3	0	0	0	0	4
04:00 PM	0	2	0	0	0	0	0	0	0	0	0	0	2
04:30 PM	0	0	0	0	0	0	0	0	0	0	1	0	1
04:45 PM	0	3	0	0	0	0	0	0	1	0	0	0	4
Total	0	5	0	0	0	0	0	0	1	0	1	0	7
05:00 PM	0	2	0	0	0	0	0	0	1	0	1	0	4
05:15 PM	0	0	0	0	1	0	0	0	0	0	0	0	1
05:30 PM	0	0	0	0	2	0	0	0	1	0	2	0	5
05:45 PM	0	0	0	0	1	0	0	0	0	0	0	0	1
Total	0	2	0	0	4	0	0	0	2	0	3	0	11
Grand Total	0	10	0	0	6	2	0	8	3	0	4	1	34
Apprch %	0	100	0	0	75	25	0	72.7	27.3	0	80	20	
Total %	0	29.4	0	0	17.6	5.9	0	23.5	8.8	0	11.8	2.9	

CITY TRAFFIC COUNTERS

626.991.7522

www.ctcounters.com

File Name : SanFernando_VanNuys_Motorcycles
Site Code : 00000000
Start Date : 3/25/2015
Page No : 2

	San Fernando Rd Southbound				Van Nuys Blvd Westbound				San Fernando Rd Northbound				Van Nuys Blvd Eastbound				
Start Time	Left	Thru	Right	App. Total	Left	Thru	Right	App. Total	Left	Thru	Right	App. Total	Left	Thru	Right	App. Total	Int. Total
Peak Hour Analysis From 07:00 AM to 09:45 AM - Peak 1 of 1																	
Peak Hour for Entire Intersection Begins at 07:00 AM																	
07:00 AM	0	0	0	0	0	0	0	0	0	**1**	0	**1**	0	0	0	0	**1**
07:15 AM	0	0	0	0	0	**1**	0	**1**	0	0	0	0	0	0	0	0	1
07:30 AM	0	0	0	0	0	0	0	0	0	1	0	1	0	0	0	0	1
07:45 AM	0	0	0	0	0	0	**1**	1	0	0	0	0	0	0	0	0	1
Total Volume	0	0	0	0	0	1	1	2	0	2	0	2	0	0	0	0	4
% App. Total	0	0	0		0	50	50		0	100	0		0	0	0		
PHF	.000	.000	.000	.000	.000	.250	.250	.500	.000	.500	.000	.500	.000	.000	.000	.000	1.00

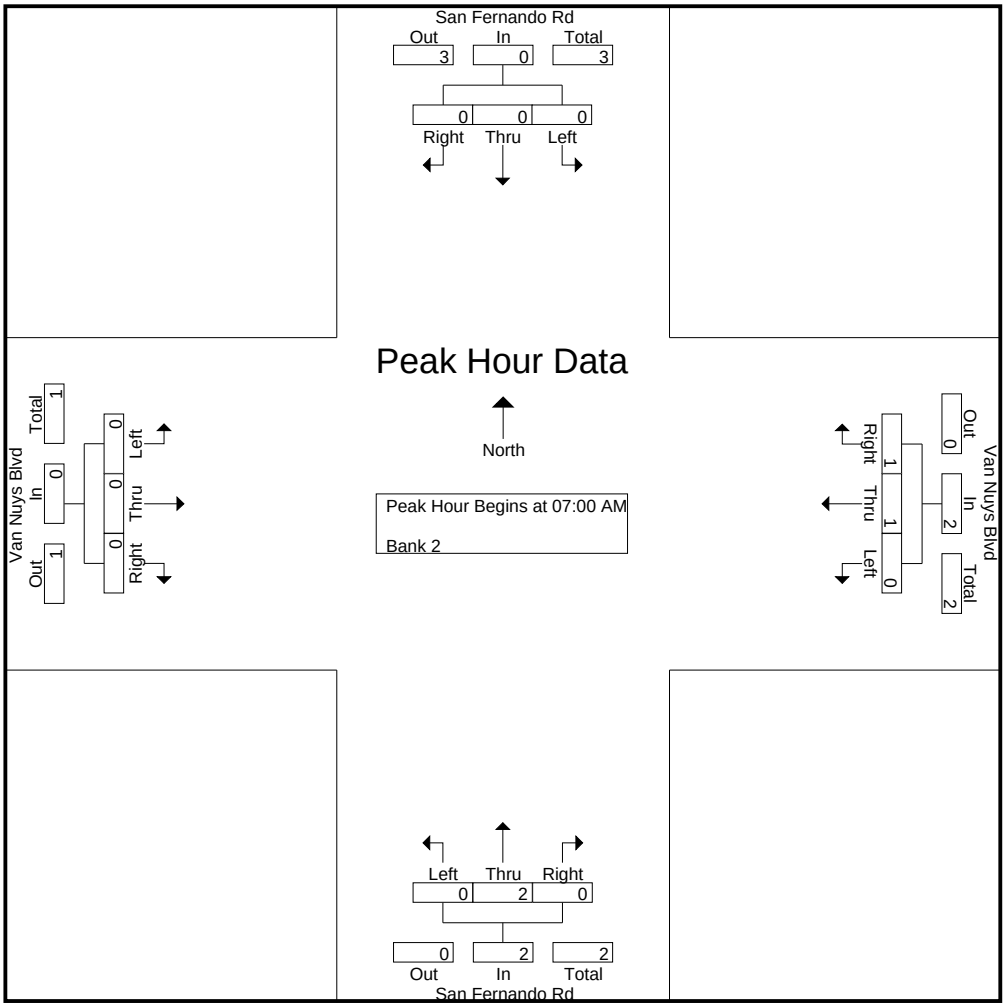

CITY TRAFFIC COUNTERS

626.991.7522

www.ctcounters.com

File Name : SanFernando_VanNuys_Motorcycles
Site Code : 00000000
Start Date : 3/25/2015
Page No : 3

	San Fernando Rd Southbound				Van Nuys Blvd Westbound				San Fernando Rd Northbound				Van Nuys Blvd Eastbound				
Start Time	Left	Thru	Right	App. Total	Left	Thru	Right	App. Total	Left	Thru	Right	App. Total	Left	Thru	Right	App. Total	Int. Total
Peak Hour Analysis From 10:00 AM to 01:45 PM - Peak 1 of 1																	
Peak Hour for Entire Intersection Begins at 12:00 PM																	
12:00 PM	0	0	0	0	0	0	0	0	0	0	0	0	0	0	0	0	0
12:15 PM	0	0	0	0	0	0	0	0	0	**1**	0	**1**	0	0	0	0	1
12:30 PM	0	0	0	0	0	0	0	0	0	0	0	0	0	0	0	0	0
12:45 PM	0	**1**	0	**1**	0	0	0	0	0	1	0	1	0	0	0	0	**2**
Total Volume	0	1	0	1	0	0	0	0	0	2	0	2	0	0	0	0	3
% App. Total	0	100	0		0	0	0		0	100	0		0	0	0		
PHF	.000	.250	.000	.250	.000	.000	.000	.000	.000	.500	.000	.500	.000	.000	.000	.000	.375

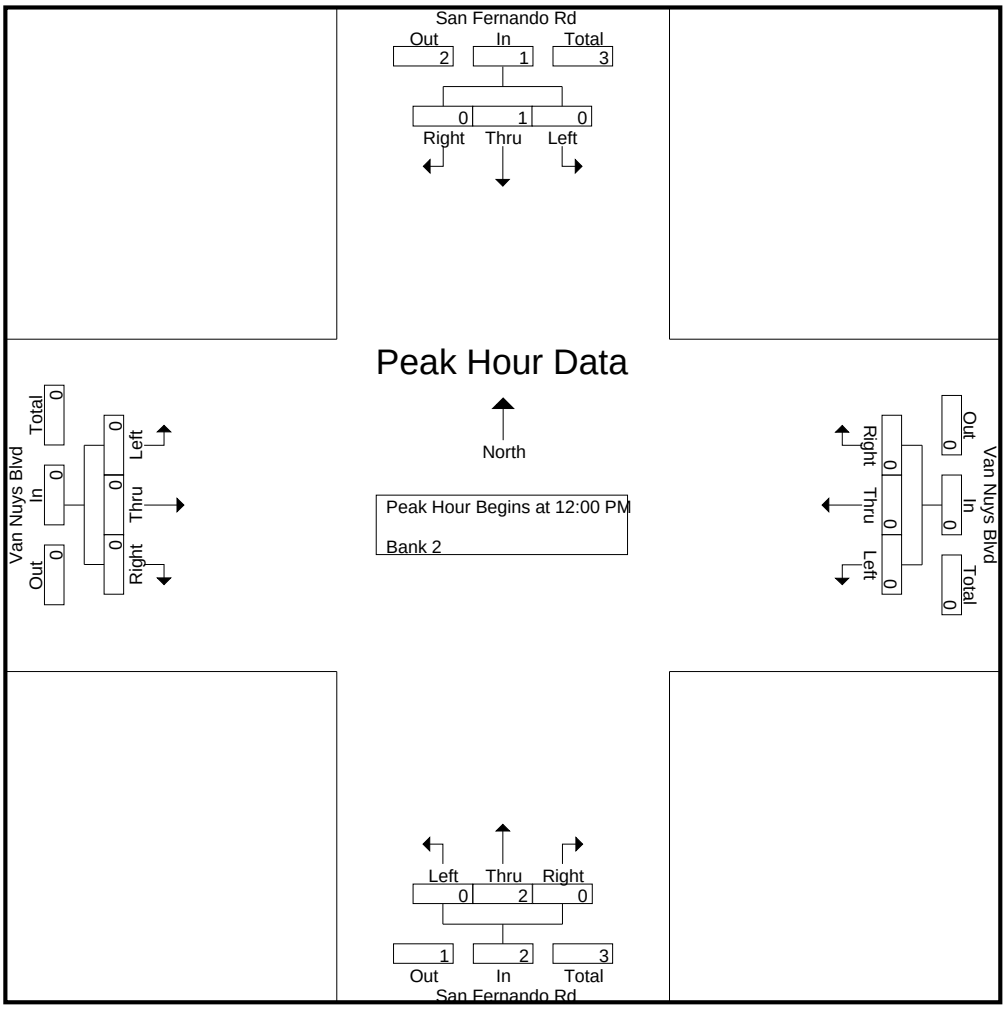

CITY TRAFFIC COUNTERS

626.991.7522

www.ctcounters.com

File Name : SanFernando_VanNuys_Motorcycles
Site Code : 00000000
Start Date : 3/25/2015
Page No : 4

	San Fernando Rd Southbound				Van Nuys Blvd Westbound				San Fernando Rd Northbound				Van Nuys Blvd Eastbound				
Start Time	Left	Thru	Right	App. Total	Left	Thru	Right	App. Total	Left	Thru	Right	App. Total	Left	Thru	Right	App. Total	Int. Total
Peak Hour Analysis From 02:00 PM to 05:45 PM - Peak 1 of 1																	
Peak Hour for Entire Intersection Begins at 04:45 PM																	
04:45 PM	0	**3**	0	**3**	0	0	0	0	0	0	**1**	**1**	0	0	0	0	4
05:00 PM	0	2	0	2	0	0	0	0	0	0	1	1	0	1	0	1	4
05:15 PM	0	0	0	0	0	1	0	1	0	0	0	0	0	0	0	0	1
05:30 PM	0	0	0	0	0	**2**	0	**2**	0	0	1	1	0	**2**	0	**2**	**5**
Total Volume	0	5	0	5	0	3	0	3	0	0	3	3	0	3	0	3	14
% App. Total	0	100	0		0	100	0		0	0	100		0	100	0		
PHF	.000	.417	.000	.417	.000	.375	.000	.375	.000	.000	.750	.750	.000	.375	.000	.375	.700

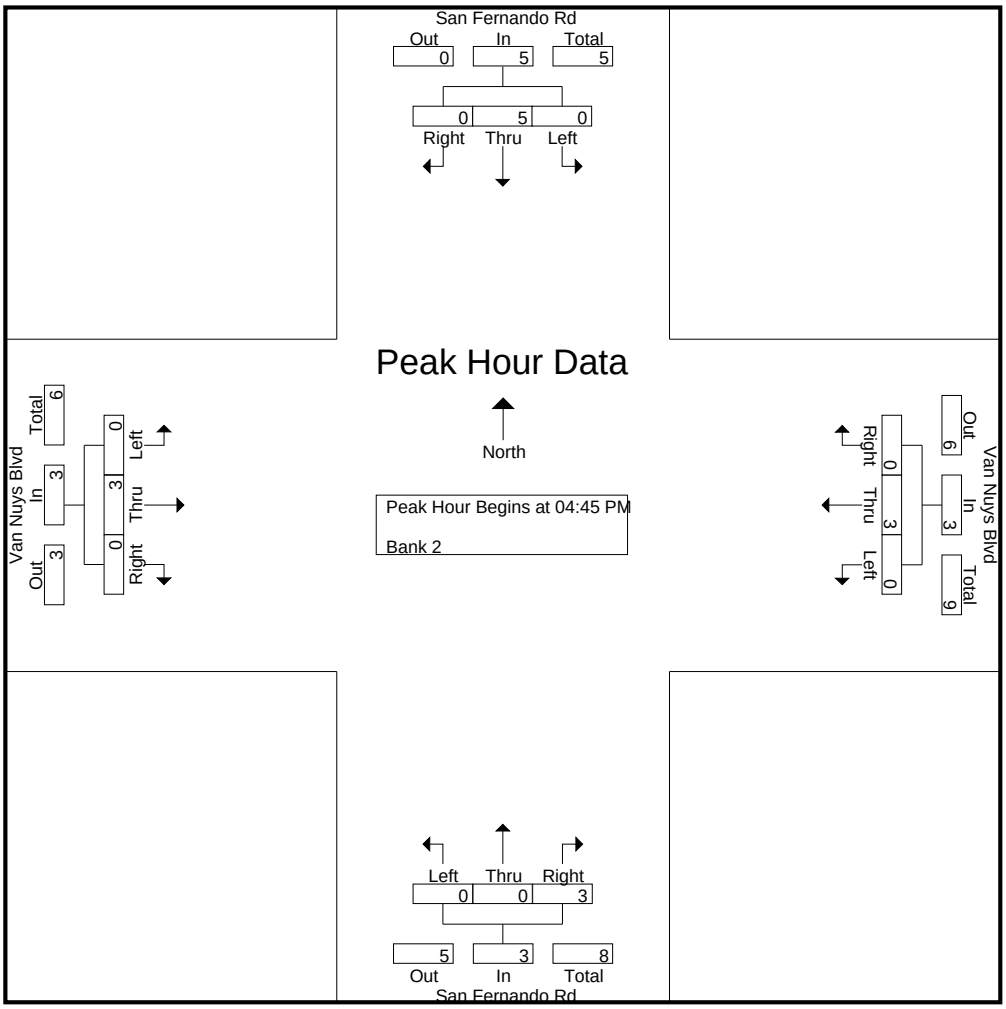

CITY TRAFFIC COUNTERS

626.991.7522

www.ctcounters.com

File Name : SanFernando_VanNuys_Buses
Site Code : 00000000
Start Date : 3/25/2015
Page No : 1

Groups Printed- Bank 1

	San Fernando Rd Southbound			Van Nuys Blvd Westbound			San Fernando Rd Northbound			Van Nuys Blvd Eastbound			
Start Time	Left	Thru	Right	Left	Thru	Right	Left	Thru	Right	Left	Thru	Right	Int. Total
07:00 AM	1	2	0	0	7	0	0	1	0	0	5	0	16
07:15 AM	0	3	0	0	2	0	0	2	0	0	1	0	8
07:30 AM	0	1	0	0	4	0	0	1	0	0	4	0	10
07:45 AM	0	2	0	0	0	0	0	2	0	0	2	0	6
Total	1	8	0	0	13	0	0	6	0	0	12	0	40
08:00 AM	0	2	0	0	3	0	0	1	0	0	4	1	11
08:15 AM	0	1	0	0	2	1	0	2	0	0	4	0	10
08:30 AM	0	2	0	0	0	0	0	3	0	1	4	0	10
08:45 AM	0	2	0	0	1	0	0	2	0	2	1	0	8
Total	0	7	0	0	6	1	0	8	0	3	13	1	39
09:00 AM	0	1	0	0	2	0	0	2	0	0	4	0	9
09:15 AM	0	1	0	0	0	0	0	2	0	1	3	0	7
09:30 AM	0	1	0	0	2	0	0	0	0	0	1	0	4
09:45 AM	0	1	0	0	1	0	0	1	0	0	2	0	5
Total	0	4	0	0	5	0	0	5	0	1	10	0	25
12:00 PM	0	1	0	0	2	0	0	0	0	0	2	0	5
12:15 PM	0	3	0	0	0	0	0	2	0	0	2	0	7
12:30 PM	0	0	0	1	3	0	0	0	0	0	2	0	6
12:45 PM	0	2	0	0	1	0	0	0	0	0	1	0	4
Total	0	6	0	1	6	0	0	2	0	0	7	0	22
01:00 PM	0	0	0	0	1	0	0	1	0	0	4	0	6
01:15 PM	0	1	1	0	1	0	0	1	0	0	0	0	4
01:30 PM	0	2	2	0	2	0	0	1	0	0	1	0	8
01:45 PM	0	2	0	0	0	0	0	1	0	0	1	0	4
Total	0	5	3	0	4	0	0	4	0	0	6	0	22
03:00 PM	0	1	1	0	5	0	0	1	0	0	1	0	9
03:15 PM	0	2	0	0	3	0	1	1	0	0	5	0	12
03:30 PM	0	2	0	0	3	0	1	2	1	0	4	0	13
03:45 PM	1	3	0	0	1	0	0	0	0	1	2	0	8
Total	1	8	1	0	12	0	2	4	1	1	12	0	42
04:00 PM	0	2	0	0	2	0	0	0	0	1	3	0	8
04:15 PM	0	1	0	0	3	0	0	3	0	0	7	0	14
04:30 PM	0	2	0	0	2	1	0	1	0	2	1	0	9
04:45 PM	0	0	0	0	4	0	0	1	0	1	2	0	8
Total	0	5	0	0	11	1	0	5	0	4	13	0	39
05:00 PM	0	2	0	0	1	0	0	3	0	0	1	0	7
05:15 PM	0	0	0	0	2	0	0	1	0	0	4	0	7
05:30 PM	0	1	0	0	2	0	0	2	0	0	1	0	6
05:45 PM	0	1	0	0	1	1	0	1	0	0	2	0	6
Total	0	4	0	0	6	1	0	7	0	0	8	0	26
Grand Total	2	47	4	1	63	3	2	41	1	9	81	1	255
Apprch %	3.8	88.7	7.5	1.5	94	4.5	4.5	93.2	2.3	9.9	89	1.1	
Total %	0.8	18.4	1.6	0.4	24.7	1.2	0.8	16.1	0.4	3.5	31.8	0.4	

CITY TRAFFIC COUNTERS

626.991.7522

www.ctcounters.com

File Name : SanFernando_VanNuys_Buses
Site Code : 00000000
Start Date : 3/25/2015
Page No : 2

	San Fernando Rd Southbound				Van Nuys Blvd Westbound				San Fernando Rd Northbound				Van Nuys Blvd Eastbound				
Start Time	Left	Thru	Right	App. Total	Left	Thru	Right	App. Total	Left	Thru	Right	App. Total	Left	Thru	Right	App. Total	Int. Total
Peak Hour Analysis From 07:00 AM to 09:45 AM - Peak 1 of 1																	
Peak Hour for Entire Intersection Begins at 07:00 AM																	
07:00 AM	**1**	2	0	**3**	0	**7**	0	**7**	0	1	0	1	0	**5**	0	**5**	**16**
07:15 AM	0	**3**	0	3	0	2	0	2	0	**2**	0	**2**	0	1	0	1	8
07:30 AM	0	1	0	1	0	4	0	4	0	1	0	1	0	4	0	4	10
07:45 AM	0	2	0	2	0	0	0	0	0	2	0	2	0	2	0	2	6
Total Volume	1	8	0	9	0	13	0	13	0	6	0	6	0	12	0	12	40
% App. Total	11.1	88.9	0		0	100	0		0	100	0		0	100	0		
PHF	.250	.667	.000	.750	.000	.464	.000	.464	.000	.750	.000	.750	.000	.600	.000	.600	.625

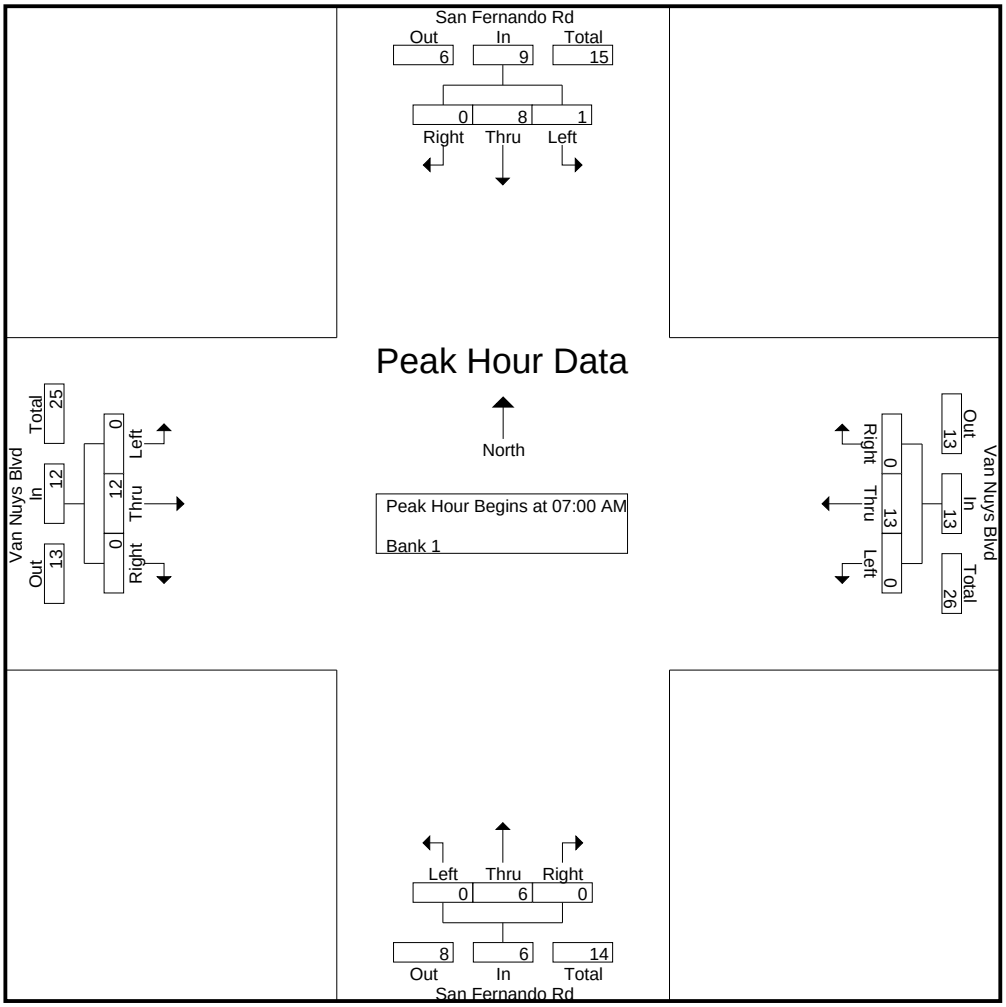

CITY TRAFFIC COUNTERS

626.991.7522

www.ctcounters.com

File Name : SanFernando_VanNuys_Buses
Site Code : 00000000
Start Date : 3/25/2015
Page No : 3

	San Fernando Rd Southbound				Van Nuys Blvd Westbound				San Fernando Rd Northbound				Van Nuys Blvd Eastbound				
Start Time	Left	Thru	Right	App. Total	Left	Thru	Right	App. Total	Left	Thru	Right	App. Total	Left	Thru	Right	App. Total	Int. Total
Peak Hour Analysis From 10:00 AM to 01:45 PM - Peak 1 of 1																	
Peak Hour for Entire Intersection Begins at 12:15 PM																	
12:15 PM	0	**3**	0	**3**	0	0	0	0	0	**2**	0	**2**	0	2	0	2	**7**
12:30 PM	0	0	0	0	**1**	**3**	0	**4**	0	0	0	0	0	2	0	2	6
12:45 PM	0	2	0	2	0	1	0	1	0	0	0	0	0	1	0	1	4
01:00 PM	0	0	0	0	0	1	0	1	0	1	0	1	0	**4**	0	**4**	6
Total Volume	0	5	0	5	1	5	0	6	0	3	0	3	0	9	0	9	23
% App. Total	0	100	0		16.7	83.3	0		0	100	0		0	100	0		
PHF	.000	.417	.000	.417	.250	.417	.000	.375	.000	.375	.000	.375	.000	.563	.000	.563	.821

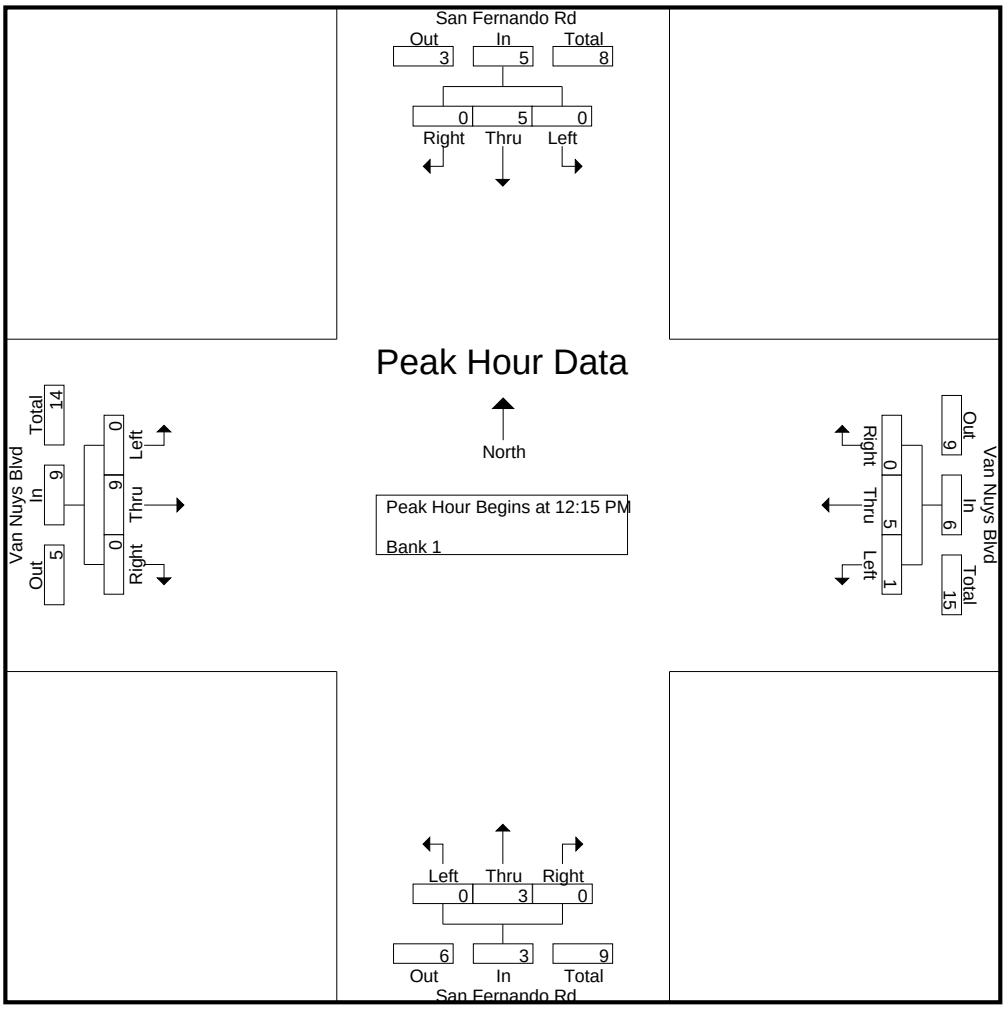

CITY TRAFFIC COUNTERS

626.991.7522

www.ctcounters.com

File Name : SanFernando_VanNuys_Buses
Site Code : 00000000
Start Date : 3/25/2015
Page No : 4

	San Fernando Rd Southbound				Van Nuys Blvd Westbound				San Fernando Rd Northbound				Van Nuys Blvd Eastbound				
Start Time	Left	Thru	Right	App. Total	Left	Thru	Right	App. Total	Left	Thru	Right	App. Total	Left	Thru	Right	App. Total	Int. Total
Peak Hour Analysis From 02:00 PM to 05:45 PM - Peak 1 of 1																	
Peak Hour for Entire Intersection Begins at 03:30 PM																	
03:30 PM	0	2	0	2	0	**3**	0	**3**	**1**	2	**1**	**4**	0	4	0	4	13
03:45 PM	**1**	**3**	0	**4**	0	1	0	1	0	0	0	0	**1**	2	0	3	8
04:00 PM	0	2	0	2	0	2	0	2	0	0	0	0	1	3	0	4	8
04:15 PM	0	1	0	1	0	3	0	3	0	**3**	0	3	0	**7**	0	**7**	**14**
Total Volume	1	8	0	9	0	9	0	9	1	5	1	7	2	16	0	18	43
% App. Total	11.1	88.9	0		0	100	0		14.3	71.4	14.3		11.1	88.9	0		
PHF	.250	.667	.000	.563	.000	.750	.000	.750	.250	.417	.250	.438	.500	.571	.000	.643	.768

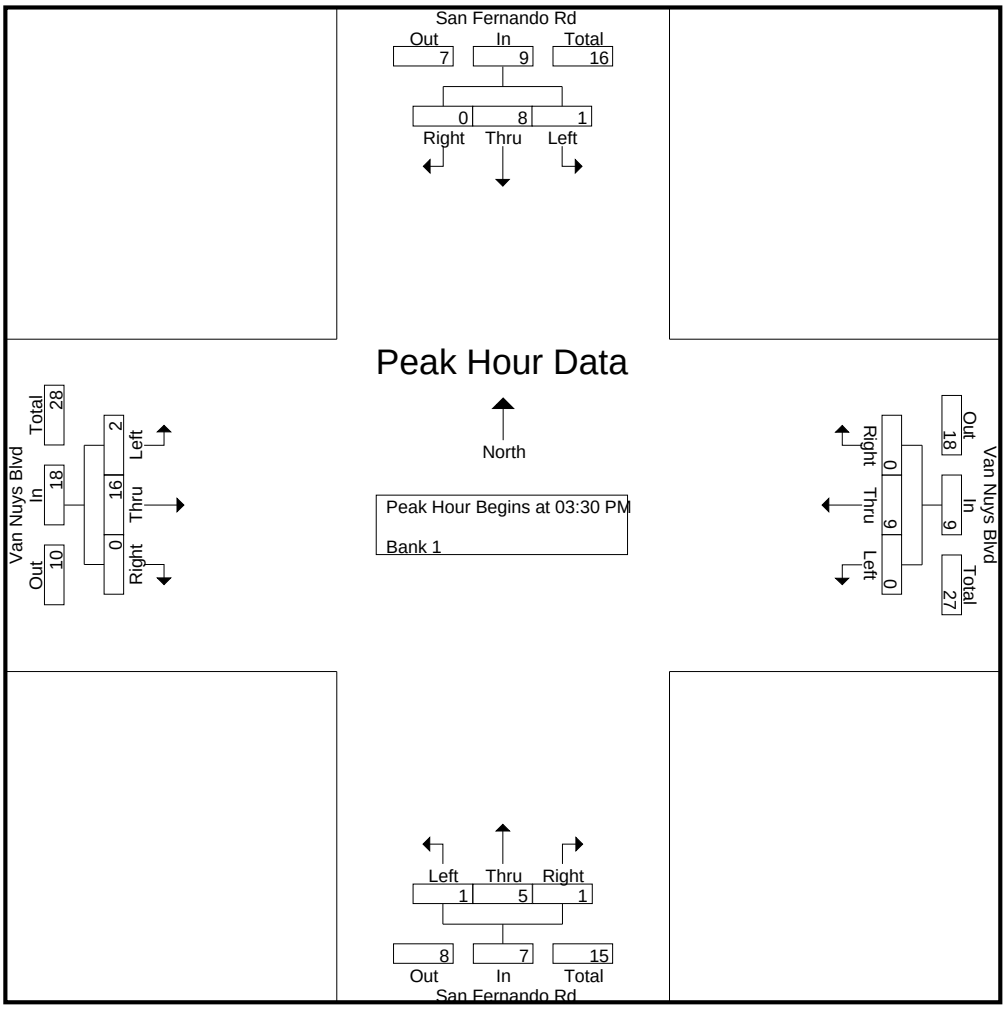

CITY TRAFFIC COUNTERS

626.991.7522

www.ctcounters.com

File Name : SanFernando_VanNuys_2axle
Site Code : 00000000
Start Date : 3/25/2015
Page No : 1

Groups Printed- Unshifted

	San Fernando Rd Southbound			Van Nuys Blvd Westbound			San Fernando Rd Northbound			Van Nuys Blvd Eastbound			
Start Time	Left	Thru	Right	Left	Thru	Right	Left	Thru	Right	Left	Thru	Right	Int. Total
07:00 AM	0	8	1	2	5	0	0	3	2	1	3	1	26
07:15 AM	1	6	1	0	0	2	0	2	0	0	5	1	18
07:30 AM	1	10	1	0	5	0	0	4	2	0	3	0	26
07:45 AM	1	5	0	2	6	0	1	1	0	1	5	0	22
Total	3	29	3	4	16	2	1	10	4	2	16	2	92
08:00 AM	1	8	1	0	6	1	0	3	1	0	3	0	24
08:15 AM	1	7	2	1	3	4	1	1	1	0	2	1	24
08:30 AM	1	6	0	2	0	3	1	6	1	0	3	0	23
08:45 AM	1	5	1	3	0	1	1	4	2	0	0	1	19
Total	4	26	4	6	9	9	3	14	5	0	8	2	90
09:00 AM	4	8	0	3	4	1	2	2	1	0	1	1	27
09:15 AM	2	7	2	2	5	2	0	6	4	0	2	1	33
09:30 AM	7	6	1	1	2	2	1	6	1	0	2	1	30
09:45 AM	0	9	1	0	5	1	5	3	1	1	2	0	28
Total	13	30	4	6	16	6	8	17	7	1	7	3	118
12:00 PM	1	6	1	0	3	2	0	1	1	1	2	2	20
12:15 PM	2	7	1	2	2	1	0	10	0	1	1	1	28
12:30 PM	1	6	0	0	2	0	1	5	0	0	4	1	20
12:45 PM	3	4	2	1	5	2	1	8	0	0	1	1	28
Total	7	23	4	3	12	5	2	24	1	2	8	5	96
01:00 PM	1	4	2	2	4	0	1	3	1	3	3	2	26
01:15 PM	1	6	0	0	3	1	0	1	1	2	2	1	18
01:30 PM	1	6	1	0	1	0	1	5	1	1	4	4	25
01:45 PM	2	8	1	0	2	0	0	7	0	0	3	0	23
Total	5	24	4	2	10	1	2	16	3	6	12	7	92
03:00 PM	2	5	1	0	4	1	0	3	1	1	2	0	20
03:15 PM	1	7	0	1	1	0	1	2	0	1	1	1	16
03:30 PM	0	8	1	1	4	1	2	8	1	0	3	1	30
03:45 PM	1	3	0	1	6	0	0	6	1	1	2	0	21
Total	4	23	2	3	15	2	3	19	3	3	8	2	87
04:00 PM	1	2	1	0	4	2	3	5	1	0	4	1	24
04:15 PM	1	5	2	2	3	1	1	5	2	0	2	0	24
04:30 PM	1	4	2	2	2	1	0	4	0	1	3	0	20
04:45 PM	3	5	2	1	1	1	2	5	1	0	2	1	24
Total	6	16	7	5	10	5	6	19	4	1	11	2	92
05:00 PM	1	7	3	0	2	1	0	0	1	1	2	1	19
05:15 PM	1	4	1	2	4	1	1	2	1	2	2	2	23
05:30 PM	0	5	0	0	2	1	1	4	1	1	4	0	19
05:45 PM	1	2	1	1	4	2	0	6	2	1	3	1	24
Total	3	18	5	3	12	5	2	12	5	5	11	4	85
Grand Total	45	189	33	32	100	35	27	131	32	20	81	27	752
Apprch %	16.9	70.8	12.4	19.2	59.9	21	14.2	68.9	16.8	15.6	63.3	21.1	
Total %	6	25.1	4.4	4.3	13.3	4.7	3.6	17.4	4.3	2.7	10.8	3.6	

CITY TRAFFIC COUNTERS

626.991.7522

www.ctcounters.com

File Name : SanFernando_VanNuys_2axle
Site Code : 00000000
Start Date : 3/25/2015
Page No : 2

	San Fernando Rd Southbound				Van Nuys Blvd Westbound				San Fernando Rd Northbound				Van Nuys Blvd Eastbound				
Start Time	Left	Thru	Right	App. Total	Left	Thru	Right	App. Total	Left	Thru	Right	App. Total	Left	Thru	Right	App. Total	Int. Total
Peak Hour Analysis From 07:00 AM to 09:45 AM - Peak 1 of 1																	
Peak Hour for Entire Intersection Begins at 09:00 AM																	
09:00 AM	4	8	0	12	**3**	4	1	8	2	2	1	5	0	1	**1**	2	27
09:15 AM	2	7	**2**	11	2	**5**	**2**	**9**	0	**6**	**4**	**10**	0	**2**	1	**3**	**33**
09:30 AM	**7**	6	1	**14**	1	2	2	5	1	6	1	8	0	2	1	3	30
09:45 AM	0	**9**	1	10	0	5	1	6	**5**	3	1	9	**1**	2	0	3	28
Total Volume	13	30	4	47	6	16	6	28	8	17	7	32	1	7	3	11	118
% App. Total	27.7	63.8	8.5		21.4	57.1	21.4		25	53.1	21.9		9.1	63.6	27.3		
PHF	.464	.833	.500	.839	.500	.800	.750	.778	.400	.708	.438	.800	.250	.875	.750	.917	.894

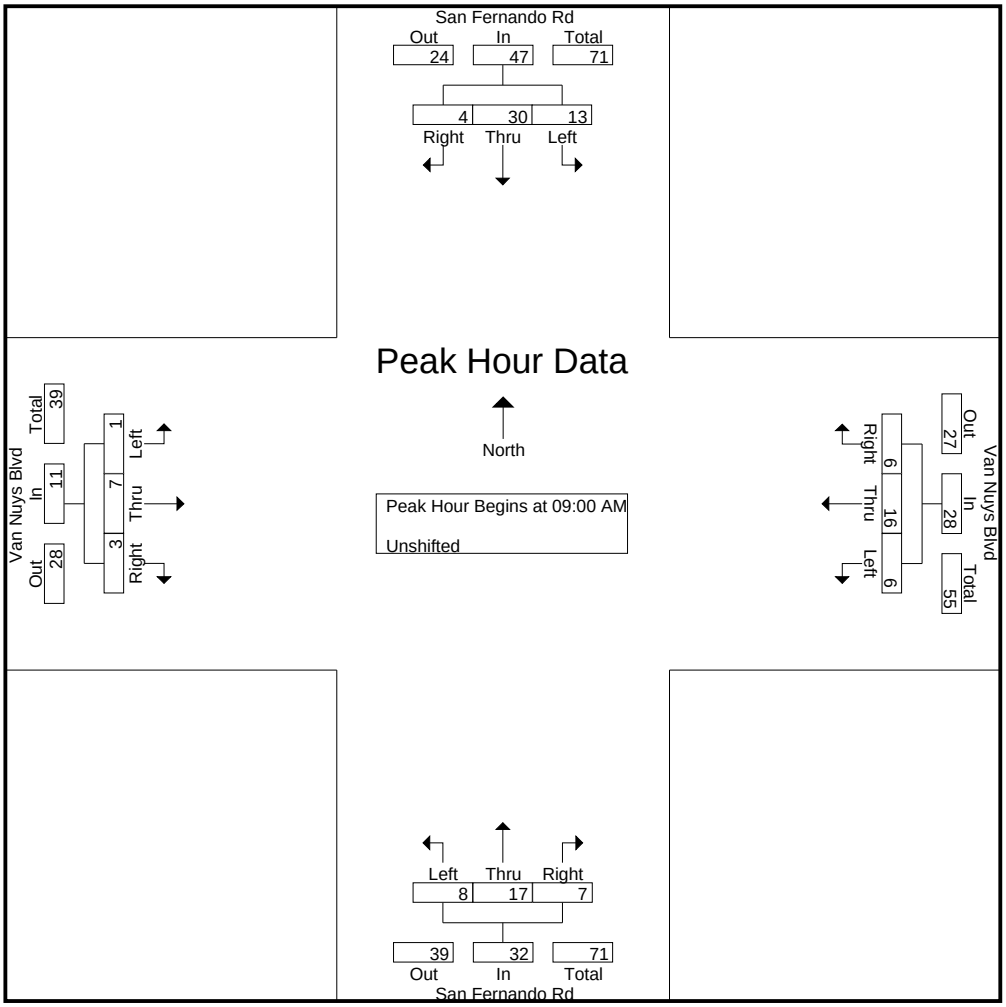

CITY TRAFFIC COUNTERS

626.991.7522

www.ctcounters.com

File Name : SanFernando_VanNuys_2axle
Site Code : 00000000
Start Date : 3/25/2015
Page No : 3

	San Fernando Rd Southbound				Van Nuys Blvd Westbound				San Fernando Rd Northbound				Van Nuys Blvd Eastbound				
Start Time	Left	Thru	Right	App. Total	Left	Thru	Right	App. Total	Left	Thru	Right	App. Total	Left	Thru	Right	App. Total	Int. Total
Peak Hour Analysis From 10:00 AM to 01:45 PM - Peak 1 of 1																	
Peak Hour for Entire Intersection Begins at 12:15 PM																	
12:15 PM	2	**7**	1	**10**	**2**	2	1	5	0	**10**	0	**10**	1	1	1	3	**28**
12:30 PM	1	6	0	7	0	2	0	2	**1**	5	0	6	0	**4**	1	5	20
12:45 PM	**3**	4	**2**	9	1	**5**	**2**	**8**	1	8	0	9	0	1	1	2	28
01:00 PM	1	4	2	7	2	4	0	6	1	3	**1**	5	**3**	3	**2**	**8**	26
Total Volume	7	21	5	33	5	13	3	21	3	26	1	30	4	9	5	18	102
% App. Total	21.2	63.6	15.2		23.8	61.9	14.3		10	86.7	3.3		22.2	50	27.8		
PHF	.583	.750	.625	.825	.625	.650	.375	.656	.750	.650	.250	.750	.333	.563	.625	.563	.911

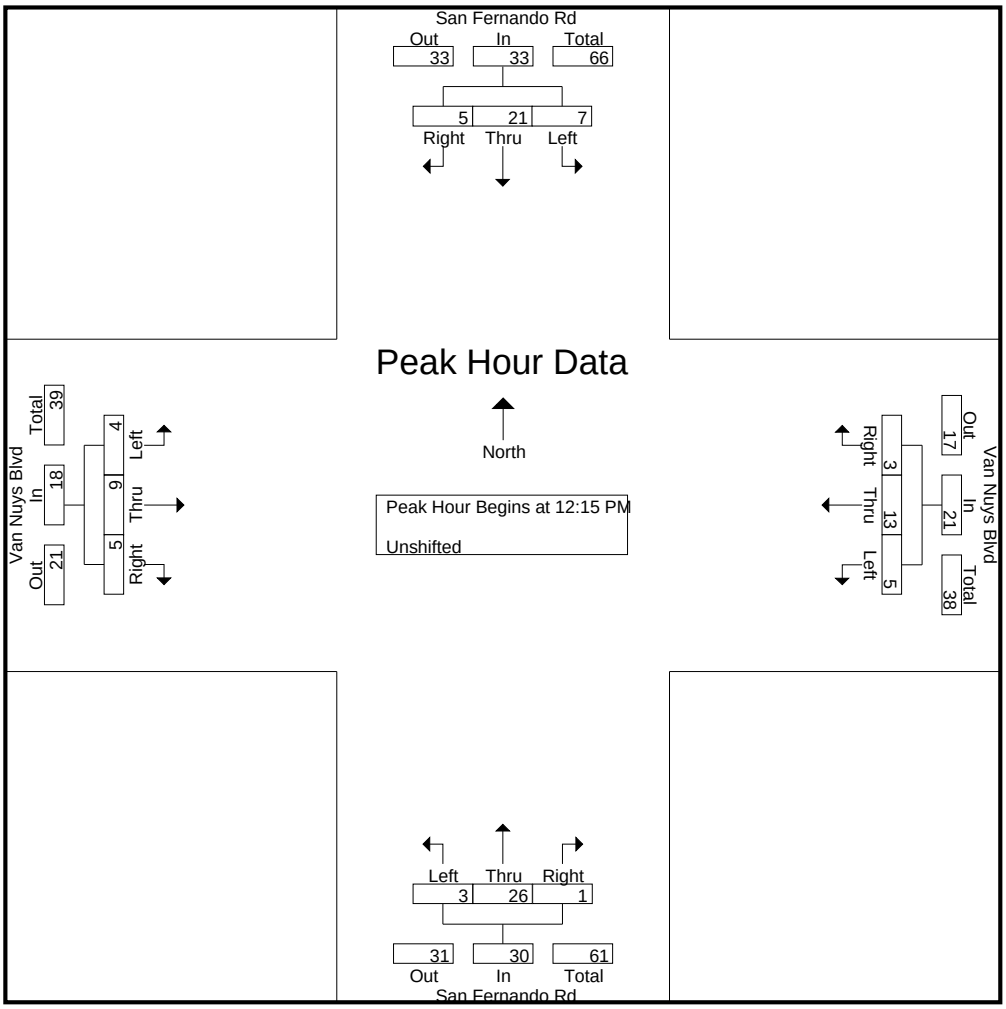

CITY TRAFFIC COUNTERS

626.991.7522

www.ctcounters.com

File Name : SanFernando_VanNuys_2axle
Site Code : 00000000
Start Date : 3/25/2015
Page No : 4

	San Fernando Rd Southbound				Van Nuys Blvd Westbound				San Fernando Rd Northbound				Van Nuys Blvd Eastbound				
Start Time	Left	Thru	Right	App. Total	Left	Thru	Right	App. Total	Left	Thru	Right	App. Total	Left	Thru	Right	App. Total	Int. Total
Peak Hour Analysis From 02:00 PM to 05:45 PM - Peak 1 of 1																	
Peak Hour for Entire Intersection Begins at 03:30 PM																	
03:30 PM	0	**8**	1	**9**	1	4	1	6	2	**8**	1	**11**	0	3	**1**	4	**30**
03:45 PM	**1**	3	0	4	1	**6**	0	**7**	0	6	1	7	**1**	2	0	3	21
04:00 PM	1	2	1	4	0	4	**2**	6	**3**	5	1	9	0	**4**	1	**5**	24
04:15 PM	1	5	**2**	8	**2**	3	1	6	1	5	**2**	8	0	2	0	2	24
Total Volume	3	18	4	25	4	17	4	25	6	24	5	35	1	11	2	14	99
% App. Total	12	72	16		16	68	16		17.1	68.6	14.3		7.1	78.6	14.3		
PHF	.750	.563	.500	.694	.500	.708	.500	.893	.500	.750	.625	.795	.250	.688	.500	.700	.825

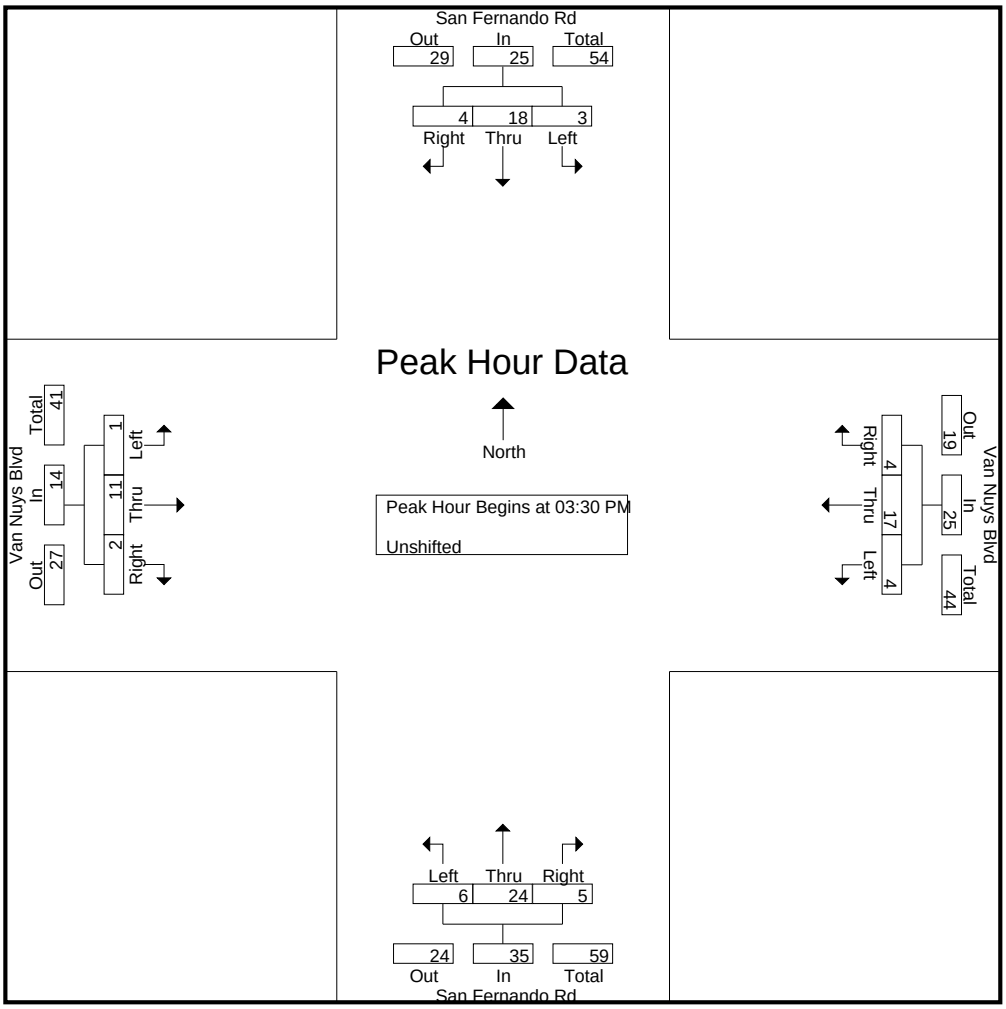

CITY TRAFFIC COUNTERS

626.991.7522

www.ctcounters.com

File Name : SanFernando_VanNuys_3axle
Site Code : 00000000
Start Date : 3/25/2015
Page No : 1

Groups Printed- Bank 1

	San Fernando Rd Southbound			Van Nuys Blvd Westbound			San Fernando Rd Northbound			Van Nuys Blvd Eastbound			
Start Time	Left	Thru	Right	Left	Thru	Right	Left	Thru	Right	Left	Thru	Right	Int. Total
07:00 AM	0	3	1	0	1	0	0	0	0	0	1	2	8
07:15 AM	0	2	0	0	1	0	0	0	0	0	0	0	3
07:30 AM	0	2	0	0	1	0	0	1	0	0	0	0	4
07:45 AM	0	1	0	0	0	0	0	0	0	0	0	0	1
Total	0	8	1	0	3	0	0	1	0	0	1	2	16
08:00 AM	0	2	0	0	1	0	0	0	0	1	1	0	5
08:15 AM	0	1	1	0	0	0	0	0	0	0	2	0	4
08:30 AM	0	1	0	0	0	0	0	0	0	1	0	0	2
08:45 AM	0	1	1	0	0	0	0	0	0	0	0	0	2
Total	0	5	2	0	1	0	0	0	0	2	3	0	13
09:00 AM	0	2	0	0	0	0	0	0	1	0	3	0	6
09:15 AM	0	1	0	0	0	0	0	0	0	1	2	1	5
09:30 AM	0	1	0	0	1	0	0	1	1	1	0	0	5
09:45 AM	0	0	0	0	0	0	0	0	0	1	0	0	1
Total	0	4	0	0	1	0	0	1	2	3	5	1	17
12:00 PM	0	1	0	0	0	0	0	0	0	2	0	0	3
12:15 PM	0	0	1	0	1	1	0	1	0	0	0	0	4
12:30 PM	0	1	1	0	2	0	0	1	0	0	0	0	5
12:45 PM	0	0	2	0	1	0	1	3	0	0	1	0	8
Total	0	2	4	0	4	1	1	5	0	2	1	0	20
01:00 PM	0	2	1	0	0	0	0	2	0	0	1	0	6
01:15 PM	0	0	0	0	0	0	0	0	0	0	1	0	1
01:30 PM	0	1	0	0	0	0	0	0	0	0	1	1	3
01:45 PM	0	0	0	0	0	1	0	2	0	0	0	0	3
Total	0	3	1	0	0	1	0	4	0	0	3	1	13
03:15 PM	2	1	0	0	0	0	0	0	0	0	0	0	3
03:30 PM	0	0	1	0	0	1	0	0	0	0	2	0	4
03:45 PM	2	2	0	2	0	0	0	0	0	0	0	0	6
Total	4	3	1	2	0	1	0	0	0	0	2	0	13
04:15 PM	0	1	0	0	0	0	0	0	0	1	0	0	2
04:45 PM	0	1	0	0	0	0	0	0	0	0	0	0	1
Total	0	2	0	0	0	0	0	0	0	1	0	0	3
05:00 PM	0	1	0	0	0	0	0	0	0	0	0	0	1
05:15 PM	1	1	0	0	0	0	0	0	0	0	0	0	2
05:30 PM	0	1	0	0	0	1	0	0	0	0	1	0	3
05:45 PM	1	1	0	0	0	0	0	1	0	0	1	0	4
Total	2	4	0	0	0	1	0	1	0	0	2	0	10
Grand Total	6	31	9	2	9	4	1	12	2	8	17	4	105
Apprch %	13	67.4	19.6	13.3	60	26.7	6.7	80	13.3	27.6	58.6	13.8	
Total %	5.7	29.5	8.6	1.9	8.6	3.8	1	11.4	1.9	7.6	16.2	3.8	

CITY TRAFFIC COUNTERS

626.991.7522

www.ctcounters.com

File Name : SanFernando_VanNuys_3axle
Site Code : 00000000
Start Date : 3/25/2015
Page No : 2

	San Fernando Rd Southbound				Van Nuys Blvd Westbound				San Fernando Rd Northbound				Van Nuys Blvd Eastbound				
Start Time	Left	Thru	Right	App. Total	Left	Thru	Right	App. Total	Left	Thru	Right	App. Total	Left	Thru	Right	App. Total	Int. Total
Peak Hour Analysis From 07:00 AM to 09:45 AM - Peak 1 of 1																	
Peak Hour for Entire Intersection Begins at 08:45 AM																	
08:45 AM	0	1	**1**	**2**	0	0	0	0	0	0	0	0	0	0	0	0	2
09:00 AM	0	**2**	0	2	0	0	0	0	0	0	**1**	1	0	**3**	0	3	**6**
09:15 AM	0	1	0	1	0	0	0	0	0	0	0	0	**1**	2	**1**	**4**	5
09:30 AM	0	1	0	1	0	**1**	0	**1**	0	**1**	1	**2**	1	0	0	1	5
Total Volume	0	5	1	6	0	1	0	1	0	1	2	3	2	5	1	8	18
% App. Total	0	83.3	16.7		0	100	0		0	33.3	66.7		25	62.5	12.5		
PHF	.000	.625	.250	.750	.000	.250	.000	.250	.000	.250	.500	.375	.500	.417	.250	.500	.750

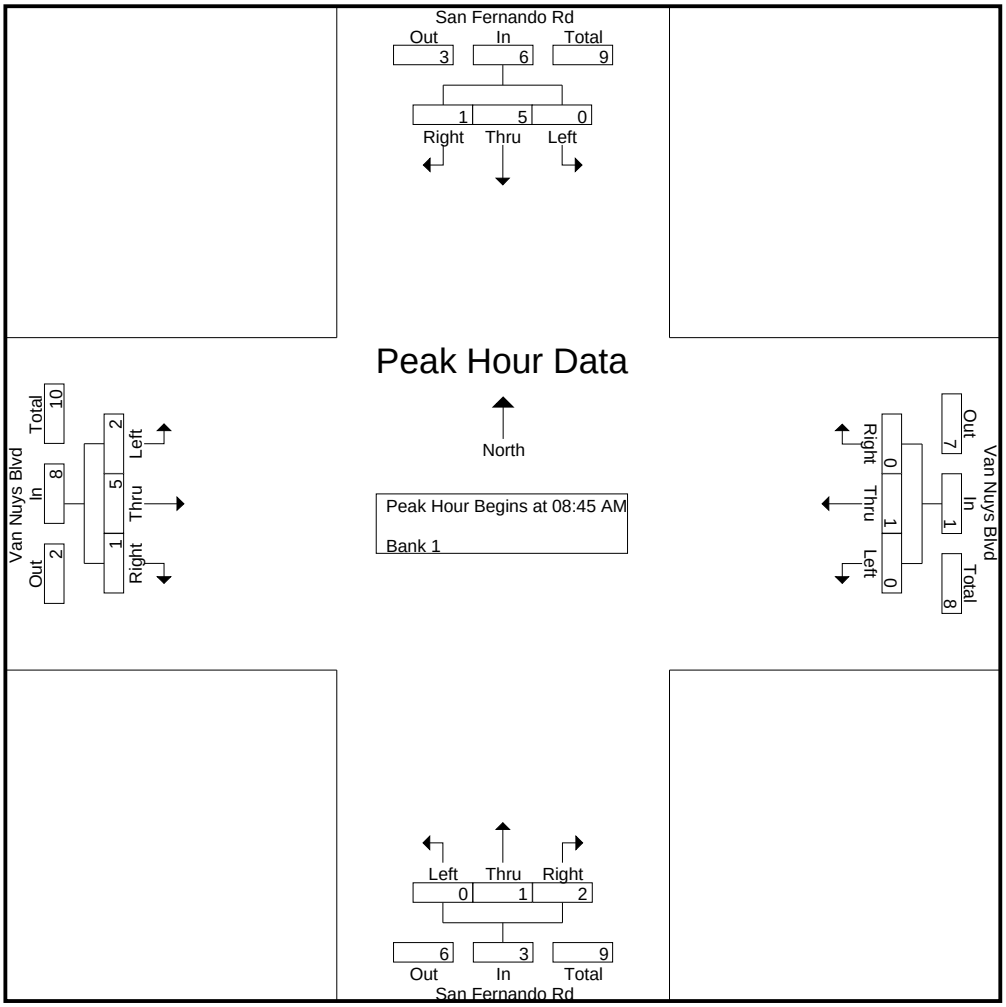

CITY TRAFFIC COUNTERS

626.991.7522

www.ctcounters.com

File Name : SanFernando_VanNuys_3axle
Site Code : 00000000
Start Date : 3/25/2015
Page No : 3

	San Fernando Rd Southbound				Van Nuys Blvd Westbound				San Fernando Rd Northbound				Van Nuys Blvd Eastbound				
Start Time	Left	Thru	Right	App. Total	Left	Thru	Right	App. Total	Left	Thru	Right	App. Total	Left	Thru	Right	App. Total	Int. Total
Peak Hour Analysis From 10:00 AM to 01:45 PM - Peak 1 of 1																	
Peak Hour for Entire Intersection Begins at 12:15 PM																	
12:15 PM	0	0	1	1	0	1	**1**	**2**	0	1	0	1	0	0	0	0	4
12:30 PM	0	1	1	2	0	**2**	0	2	0	1	0	1	0	0	0	0	5
12:45 PM	0	0	**2**	2	0	1	0	1	**1**	**3**	0	**4**	0	**1**	0	**1**	**8**
01:00 PM	0	**2**	1	**3**	0	0	0	0	0	2	0	2	0	1	0	1	6
Total Volume	0	3	5	8	0	4	1	5	1	7	0	8	0	2	0	2	23
% App. Total	0	37.5	62.5		0	80	20		12.5	87.5	0		0	100	0		
PHF	.000	.375	.625	.667	.000	.500	.250	.625	.250	.583	.000	.500	.000	.500	.000	.500	.719

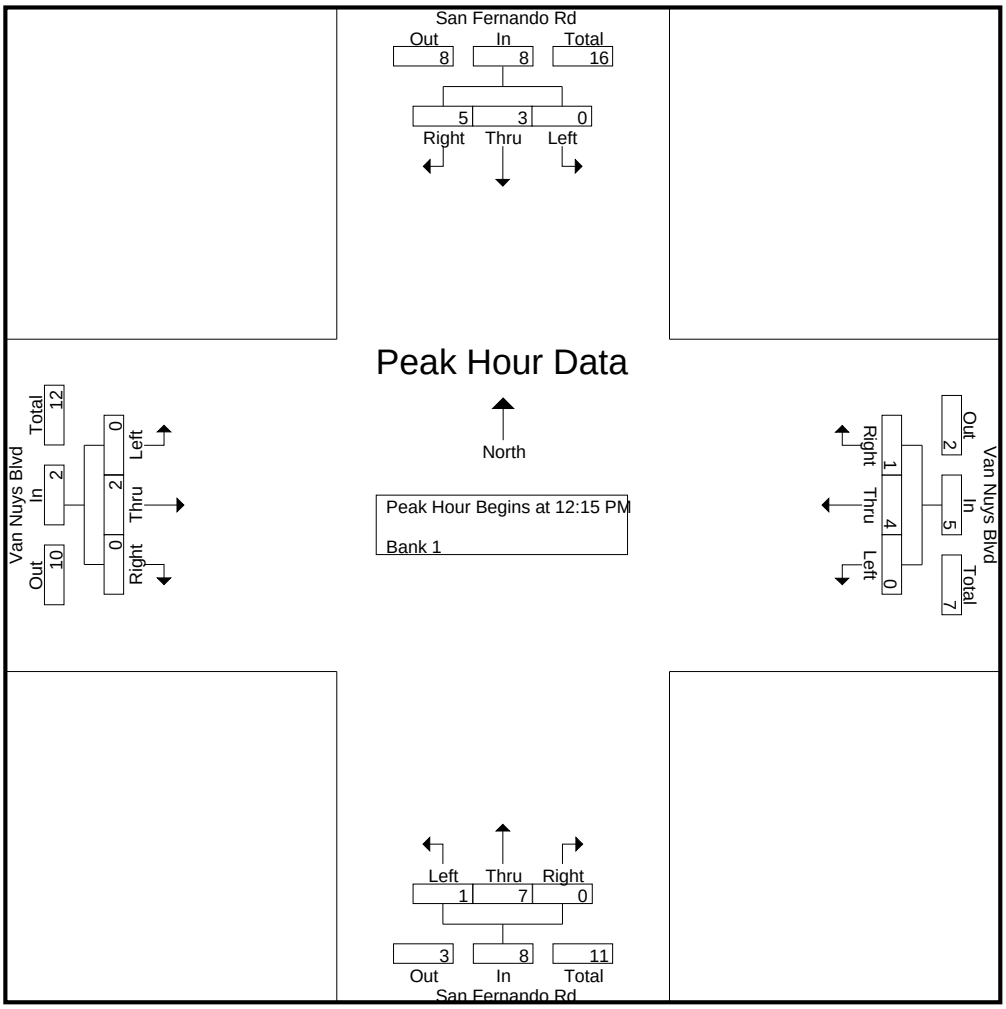

CITY TRAFFIC COUNTERS

626.991.7522

www.ctcounters.com

File Name : SanFernando_VanNuys_3axle
Site Code : 00000000
Start Date : 3/25/2015
Page No : 4

	San Fernando Rd Southbound				Van Nuys Blvd Westbound				San Fernando Rd Northbound				Van Nuys Blvd Eastbound				
Start Time	Left	Thru	Right	App. Total	Left	Thru	Right	App. Total	Left	Thru	Right	App. Total	Left	Thru	Right	App. Total	Int. Total
Peak Hour Analysis From 02:00 PM to 05:45 PM - Peak 1 of 1																	
Peak Hour for Entire Intersection Begins at 03:00 PM																	
03:00 PM	0	0	0	0	0	0	0	0	0	0	0	0	0	0	0	0	0
03:15 PM	**2**	1	0	3	0	0	0	0	0	0	0	0	0	0	0	0	3
03:30 PM	0	0	**1**	1	0	0	**1**	1	0	0	0	0	0	**2**	0	**2**	4
03:45 PM	2	**2**	0	**4**	**2**	0	0	**2**	0	0	0	0	0	0	0	0	**6**
Total Volume	4	3	1	8	2	0	1	3	0	0	0	0	0	2	0	2	13
% App. Total	50	37.5	12.5		66.7	0	33.3		0	0	0		0	100	0		
PHF	.500	.375	.250	.500	.250	.000	.250	.375	.000	.000	.000	.000	.000	.250	.000	.250	.542

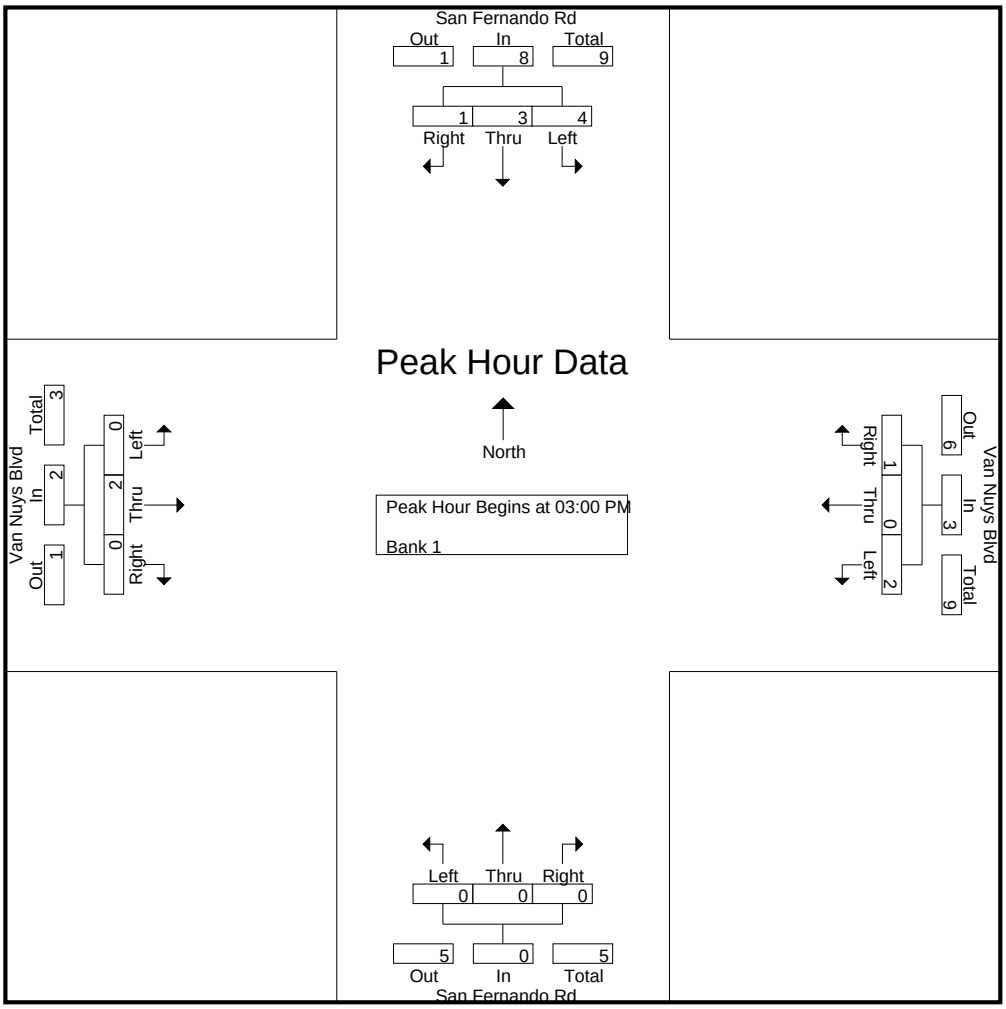

CITY TRAFFIC COUNTERS

626.991.7522

www.ctcounters.com

File Name : SanFernando_VanNuys_4axle
Site Code : 00000000
Start Date : 3/25/2015
Page No : 1

Groups Printed- Bank 2

	San Fernando Rd Southbound			Van Nuys Blvd Westbound			San Fernando Rd Northbound			Van Nuys Blvd Eastbound			
Start Time	Left	Thru	Right	Left	Thru	Right	Left	Thru	Right	Left	Thru	Right	Int. Total
07:00 AM	0	2	0	0	2	0	0	0	0	0	0	0	4
Total	0	2	0	0	2	0	0	0	0	0	0	0	4
08:00 AM	0	0	0	1	1	0	0	0	0	0	0	1	3
08:15 AM	0	1	0	0	0	0	0	0	0	0	0	1	2
08:30 AM	0	0	0	1	0	0	0	0	0	1	0	0	2
08:45 AM	0	0	1	0	1	0	0	0	0	0	1	0	3
Total	0	1	1	2	2	0	0	0	0	1	1	2	10
09:15 AM	0	1	0	0	0	0	0	0	0	0	0	0	1
09:30 AM	0	0	0	0	0	0	0	1	0	0	0	0	1
Total	0	1	0	0	0	0	0	1	0	0	0	0	2
12:00 PM	0	1	1	0	0	0	0	0	0	0	0	1	3
12:15 PM	0	0	0	0	1	0	0	0	0	0	0	0	1
12:30 PM	0	1	0	0	0	0	0	0	1	0	0	0	2
12:45 PM	0	0	0	0	0	0	0	0	1	0	0	0	1
Total	0	2	1	0	1	0	0	0	2	0	0	1	7
01:15 PM	0	1	0	0	1	0	0	1	0	0	0	0	3
01:30 PM	0	0	0	0	0	0	0	2	0	0	0	0	2
01:45 PM	1	0	0	0	0	0	0	0	0	0	0	0	1
Total	1	1	0	0	1	0	0	3	0	0	0	0	6
03:00 PM	0	0	0	0	0	0	0	0	0	0	0	1	1
03:30 PM	0	0	0	0	1	0	0	1	0	0	0	0	2
03:45 PM	0	0	0	1	0	0	0	1	0	0	0	0	2
Total	0	0	0	1	1	0	0	2	0	0	0	1	5
04:45 PM	0	0	0	0	0	0	0	0	0	0	0	1	1
Total	0	0	0	0	0	0	0	0	0	0	0	1	1
05:00 PM	0	0	0	0	0	1	0	0	0	0	0	0	1
Total	0	0	0	0	0	1	0	0	0	0	0	0	1
Grand Total	1	7	2	3	7	1	0	6	2	1	1	5	36
Apprch %	10	70	20	27.3	63.6	9.1	0	75	25	14.3	14.3	71.4	
Total %	2.8	19.4	5.6	8.3	19.4	2.8	0	16.7	5.6	2.8	2.8	13.9	

CITY TRAFFIC COUNTERS

626.991.7522

www.ctcounters.com

File Name : SanFernando_VanNuys_4axle
Site Code : 00000000
Start Date : 3/25/2015
Page No : 2

	San Fernando Rd Southbound				Van Nuys Blvd Westbound				San Fernando Rd Northbound				Van Nuys Blvd Eastbound				
Start Time	Left	Thru	Right	App. Total	Left	Thru	Right	App. Total	Left	Thru	Right	App. Total	Left	Thru	Right	App. Total	Int. Total
Peak Hour Analysis From 07:00 AM to 09:45 AM - Peak 1 of 1																	
Peak Hour for Entire Intersection Begins at 08:00 AM																	
08:00 AM	0	0	0	0	**1**	**1**	0	**2**	0	0	0	0	0	0	**1**	**1**	**3**
08:15 AM	0	**1**	0	**1**	0	0	0	0	0	0	0	0	0	0	1	1	2
08:30 AM	0	0	0	0	1	0	0	1	0	0	0	0	**1**	0	0	1	2
08:45 AM	0	0	**1**	1	0	1	0	1	0	0	0	0	0	**1**	0	1	3
Total Volume	0	1	1	2	2	2	0	4	0	0	0	0	1	1	2	4	10
% App. Total	0	50	50		50	50	0		0	0	0		25	25	50		
PHF	.000	.250	.250	.500	.500	.500	.000	.500	.000	.000	.000	.000	.250	.250	.500	1.00	.833

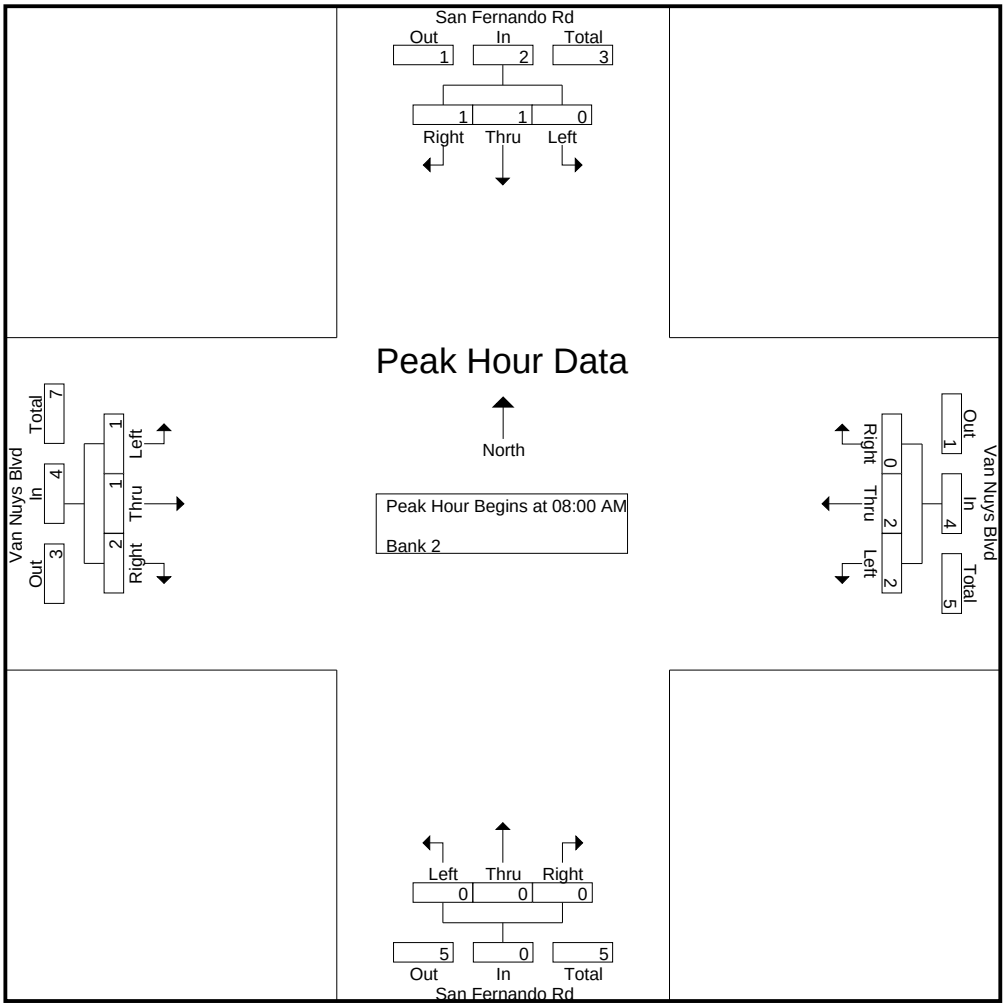

CITY TRAFFIC COUNTERS

626.991.7522

www.ctcounters.com

File Name : SanFernando_VanNuys_4axle
Site Code : 00000000
Start Date : 3/25/2015
Page No : 3

	San Fernando Rd Southbound				Van Nuys Blvd Westbound				San Fernando Rd Northbound				Van Nuys Blvd Eastbound				
Start Time	Left	Thru	Right	App. Total	Left	Thru	Right	App. Total	Left	Thru	Right	App. Total	Left	Thru	Right	App. Total	Int. Total
Peak Hour Analysis From 10:00 AM to 01:45 PM - Peak 1 of 1																	
Peak Hour for Entire Intersection Begins at 12:00 PM																	
12:00 PM	0	**1**	**1**	**2**	0	0	0	0	0	0	0	0	0	0	**1**	**1**	**3**
12:15 PM	0	0	0	0	0	**1**	0	**1**	0	0	0	0	0	0	0	0	1
12:30 PM	0	1	0	1	0	0	0	0	0	0	**1**	**1**	0	0	0	0	2
12:45 PM	0	0	0	0	0	0	0	0	0	0	1	1	0	0	0	0	1
Total Volume	0	2	1	3	0	1	0	1	0	0	2	2	0	0	1	1	7
% App. Total	0	66.7	33.3		0	100	0		0	0	100		0	0	100		
PHF	.000	.500	.250	.375	.000	.250	.000	.250	.000	.000	.500	.500	.000	.000	.250	.250	.583

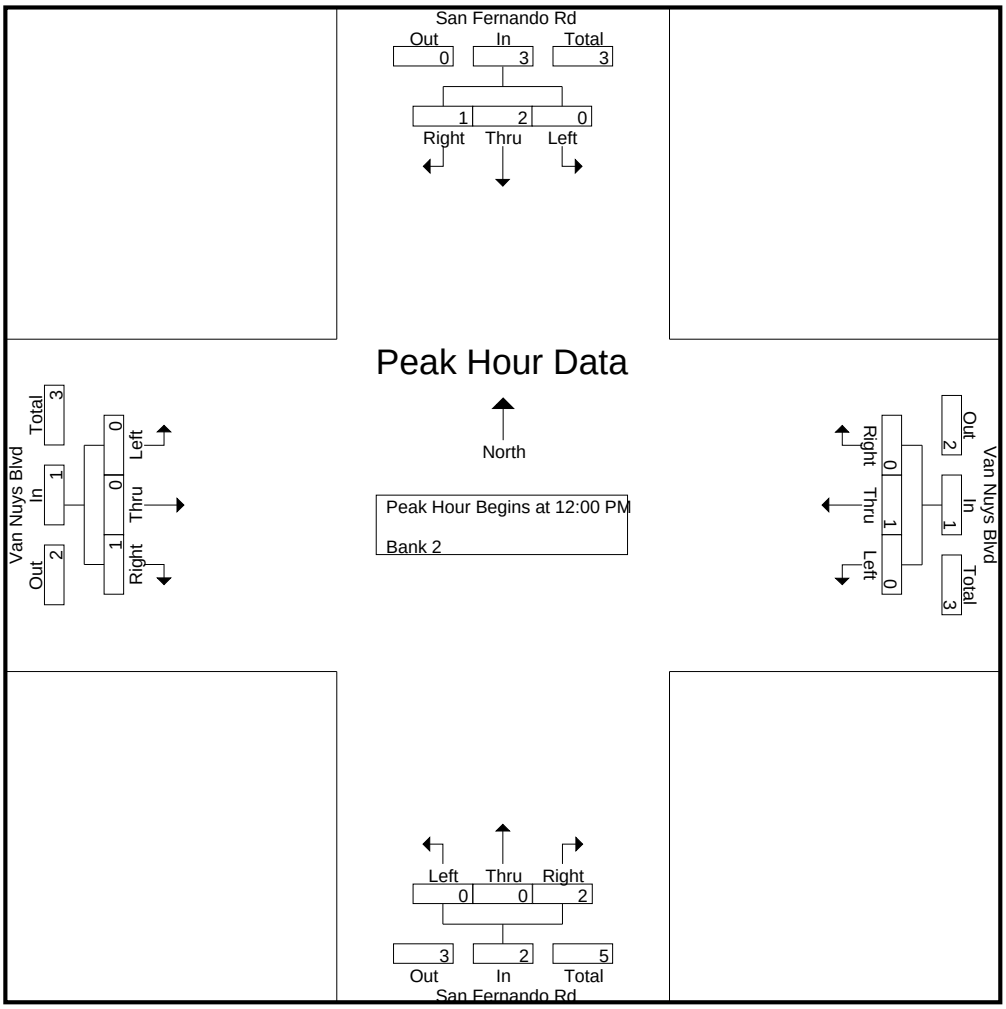

CITY TRAFFIC COUNTERS

626.991.7522

www.ctcounters.com

File Name : SanFernando_VanNuys_4axle
Site Code : 00000000
Start Date : 3/25/2015
Page No : 4

	San Fernando Rd Southbound				Van Nuys Blvd Westbound				San Fernando Rd Northbound				Van Nuys Blvd Eastbound				
Start Time	Left	Thru	Right	App. Total	Left	Thru	Right	App. Total	Left	Thru	Right	App. Total	Left	Thru	Right	App. Total	Int. Total
Peak Hour Analysis From 02:00 PM to 05:45 PM - Peak 1 of 1																	
Peak Hour for Entire Intersection Begins at 03:00 PM																	
03:00 PM	0	0	0	0	0	0	0	0	0	0	0	0	0	0	**1**	**1**	1
03:15 PM	0	0	0	0	0	0	0	0	0	0	0	0	0	0	0	0	0
03:30 PM	0	0	0	0	0	**1**	0	**1**	0	**1**	0	**1**	0	0	0	0	**2**
03:45 PM	0	0	0	0	**1**	0	0	1	0	1	0	1	0	0	0	0	2
Total Volume	0	0	0	0	1	1	0	2	0	2	0	2	0	0	1	1	5
% App. Total	0	0	0		50	50	0		0	100	0		0	0	100		
PHF	.000	.000	.000	.000	.250	.250	.000	.500	.000	.500	.000	.500	.000	.000	.250	.250	.625

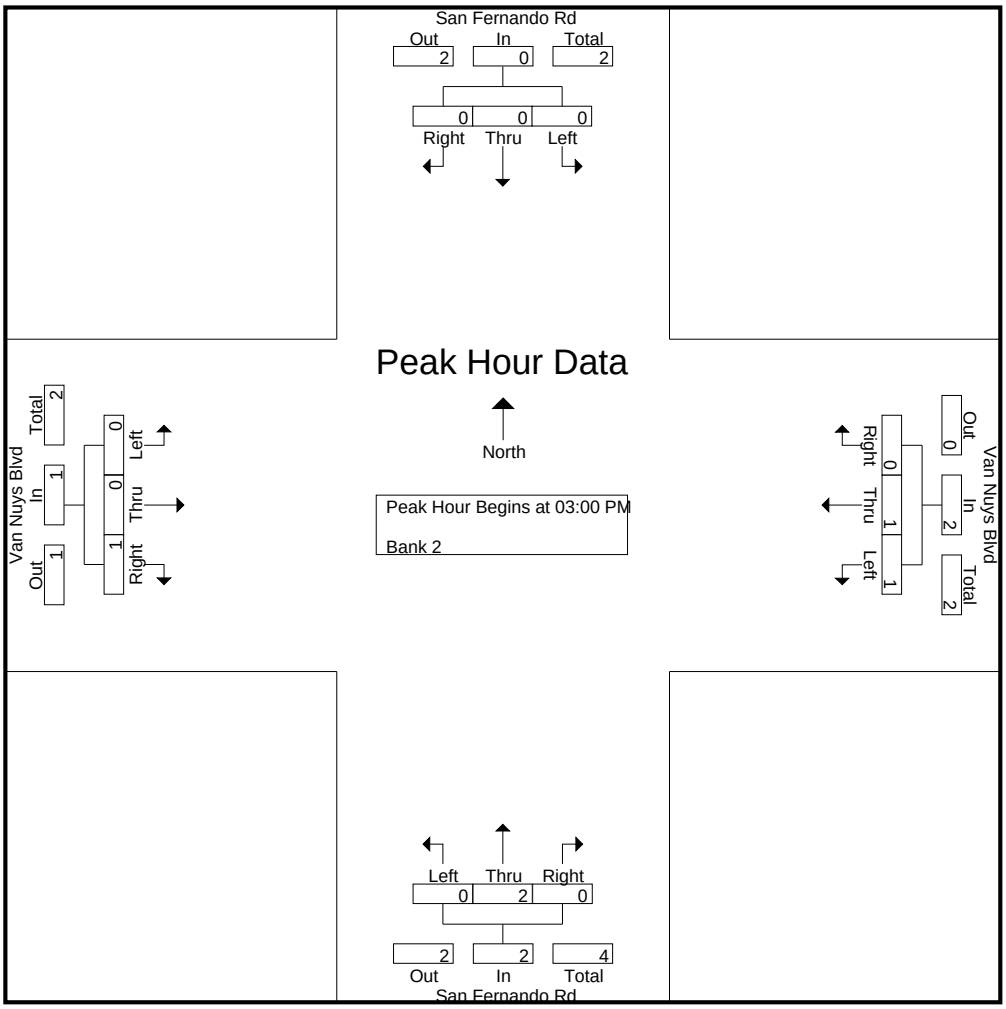

CITY TRAFFIC COUNTERS

626.991.7522

www.ctcounters.com

File Name : SanFernando_VanNuys_5axle
Site Code : 00000000
Start Date : 3/25/2015
Page No : 1

Groups Printed- Unshifted

	San Fernando Rd Southbound			Van Nuys Blvd Westbound			San Fernando Rd Northbound			Van Nuys Blvd Eastbound			
Start Time	Left	Thru	Right	Left	Thru	Right	Left	Thru	Right	Left	Thru	Right	Int. Total
07:00 AM	0	3	0	0	0	0	0	1	0	0	1	0	5
07:15 AM	2	2	0	0	0	0	0	0	0	0	0	0	4
07:30 AM	1	2	0	1	1	1	0	0	0	0	0	0	6
07:45 AM	0	2	0	0	0	1	0	0	0	0	1	0	4
Total	3	9	0	1	1	2	0	1	0	0	2	0	19
08:00 AM	0	4	1	0	1	0	0	0	0	0	0	0	6
08:15 AM	0	2	0	0	0	0	0	1	0	0	1	0	4
08:30 AM	0	1	0	0	0	2	0	1	1	0	0	0	5
08:45 AM	0	0	1	0	0	1	0	1	0	0	1	0	4
Total	0	7	2	0	1	3	0	3	1	0	2	0	19
09:00 AM	0	2	0	0	1	1	0	0	0	0	0	0	4
09:15 AM	0	2	0	1	0	0	1	1	0	0	0	0	5
09:30 AM	1	2	0	0	1	0	0	0	0	0	1	0	5
09:45 AM	0	3	0	0	0	1	1	0	0	0	0	0	5
Total	1	9	0	1	2	2	2	1	0	0	1	0	19
12:00 PM	0	1	0	0	0	0	0	1	1	0	2	0	5
12:15 PM	0	1	0	0	0	0	0	0	0	0	0	0	1
12:30 PM	0	1	0	0	0	1	0	0	0	0	0	0	2
12:45 PM	0	0	0	0	1	0	0	0	0	0	0	0	1
Total	0	3	0	0	1	1	0	1	1	0	2	0	9
01:00 PM	0	1	0	0	0	0	0	0	0	0	1	0	2
01:15 PM	0	0	0	0	0	1	0	1	0	0	0	0	2
01:30 PM	0	2	0	0	1	0	0	1	0	0	0	0	4
01:45 PM	1	0	0	1	0	1	0	1	0	0	0	0	4
Total	1	3	0	1	1	2	0	3	0	0	1	0	12
03:00 PM	0	2	0	0	0	0	0	0	0	0	1	0	3
03:15 PM	3	0	0	0	0	0	0	0	1	1	0	0	5
03:30 PM	0	0	0	0	0	0	0	1	1	0	0	0	2
03:45 PM	0	2	0	0	1	0	0	2	0	0	1	0	6
Total	3	4	0	0	1	0	0	3	2	1	2	0	16
04:00 PM	0	1	0	0	0	0	0	1	0	0	1	0	3
04:15 PM	1	0	1	0	0	0	0	0	0	0	0	0	2
04:45 PM	0	0	0	0	2	1	0	0	0	0	0	0	3
Total	1	1	1	0	2	1	0	1	0	0	1	0	8
05:00 PM	0	0	0	0	0	0	0	0	0	0	1	0	1
05:15 PM	0	1	0	0	0	0	0	0	0	0	0	0	1
Total	0	1	0	0	0	0	0	0	0	0	1	0	2
Grand Total	9	37	3	3	9	11	2	13	4	1	12	0	104
Apprch %	18.4	75.5	6.1	13	39.1	47.8	10.5	68.4	21.1	7.7	92.3	0	
Total %	8.7	35.6	2.9	2.9	8.7	10.6	1.9	12.5	3.8	1	11.5	0	

CITY TRAFFIC COUNTERS

626.991.7522

www.ctcounters.com

File Name : SanFernando_VanNuys_5axle
Site Code : 00000000
Start Date : 3/25/2015
Page No : 2

	San Fernando Rd Southbound				Van Nuys Blvd Westbound				San Fernando Rd Northbound				Van Nuys Blvd Eastbound				
Start Time	Left	Thru	Right	App. Total	Left	Thru	Right	App. Total	Left	Thru	Right	App. Total	Left	Thru	Right	App. Total	Int. Total
Peak Hour Analysis From 07:00 AM to 09:45 AM - Peak 1 of 1																	
Peak Hour for Entire Intersection Begins at 07:15 AM																	
07:15 AM	**2**	2	0	4	0	0	0	0	0	0	0	0	0	0	0	0	4
07:30 AM	1	2	0	3	**1**	**1**	**1**	**3**	0	0	0	0	0	0	0	0	**6**
07:45 AM	0	2	0	2	0	0	1	1	0	0	0	0	0	**1**	0	**1**	4
08:00 AM	0	**4**	**1**	**5**	0	1	0	1	0	0	0	0	0	0	0	0	6
Total Volume	3	10	1	14	1	2	2	5	0	0	0	0	0	1	0	1	20
% App. Total	21.4	71.4	7.1		20	40	40		0	0	0		0	100	0		
PHF	.375	.625	.250	.700	.250	.500	.500	.417	.000	.000	.000	.000	.000	.250	.000	.250	.833

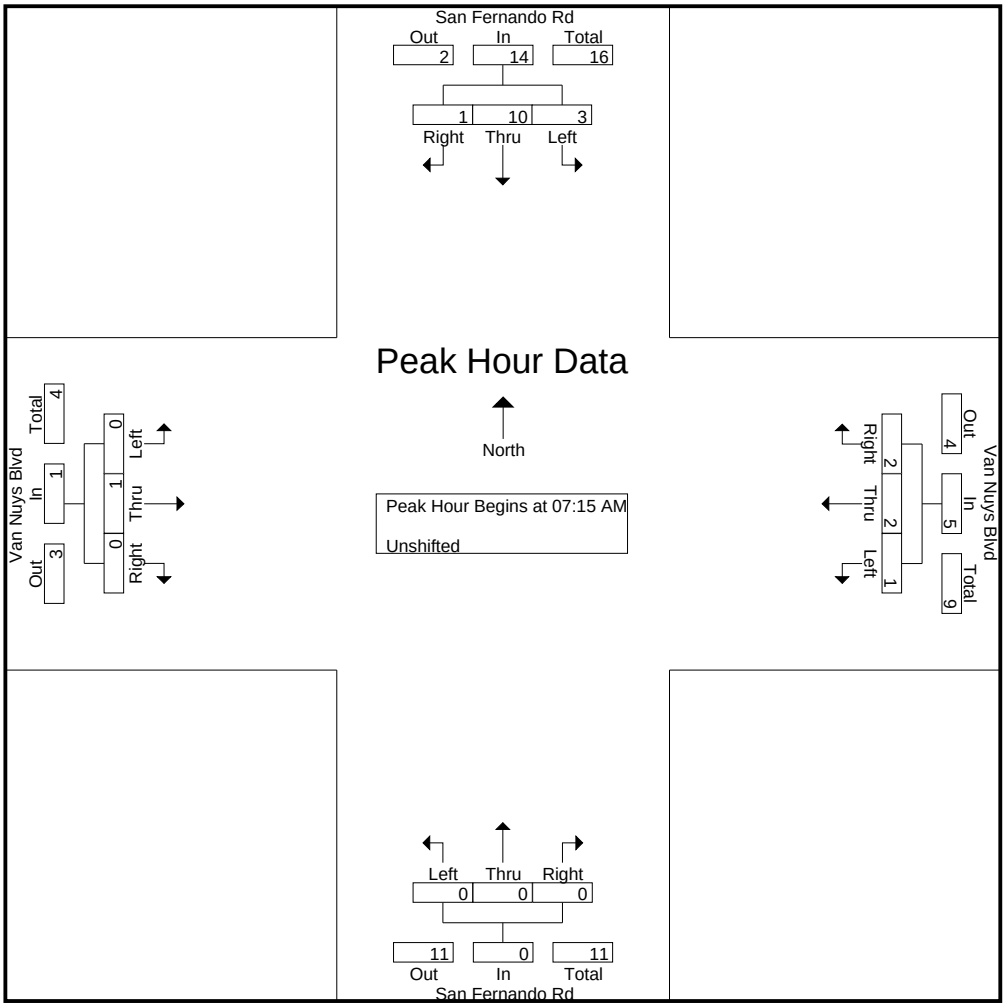

CITY TRAFFIC COUNTERS

626.991.7522

www.ctcounters.com

File Name : SanFernando_VanNuys_5axle
Site Code : 00000000
Start Date : 3/25/2015
Page No : 3

	San Fernando Rd Southbound				Van Nuys Blvd Westbound				San Fernando Rd Northbound				Van Nuys Blvd Eastbound				
Start Time	Left	Thru	Right	App. Total	Left	Thru	Right	App. Total	Left	Thru	Right	App. Total	Left	Thru	Right	App. Total	Int. Total
Peak Hour Analysis From 10:00 AM to 01:45 PM - Peak 1 of 1																	
Peak Hour for Entire Intersection Begins at 01:00 PM																	
01:00 PM	0	1	0	1	0	0	0	0	0	0	0	0	0	**1**	0	**1**	2
01:15 PM	0	0	0	0	0	0	**1**	1	0	**1**	0	**1**	0	0	0	0	2
01:30 PM	0	**2**	0	**2**	0	**1**	0	1	0	1	0	1	0	0	0	0	**4**
01:45 PM	**1**	0	0	1	**1**	0	1	**2**	0	1	0	1	0	0	0	0	4
Total Volume	1	3	0	4	1	1	2	4	0	3	0	3	0	1	0	1	12
% App. Total	25	75	0		25	25	50		0	100	0		0	100	0		
PHF	.250	.375	.000	.500	.250	.250	.500	.500	.000	.750	.000	.750	.000	.250	.000	.250	.750

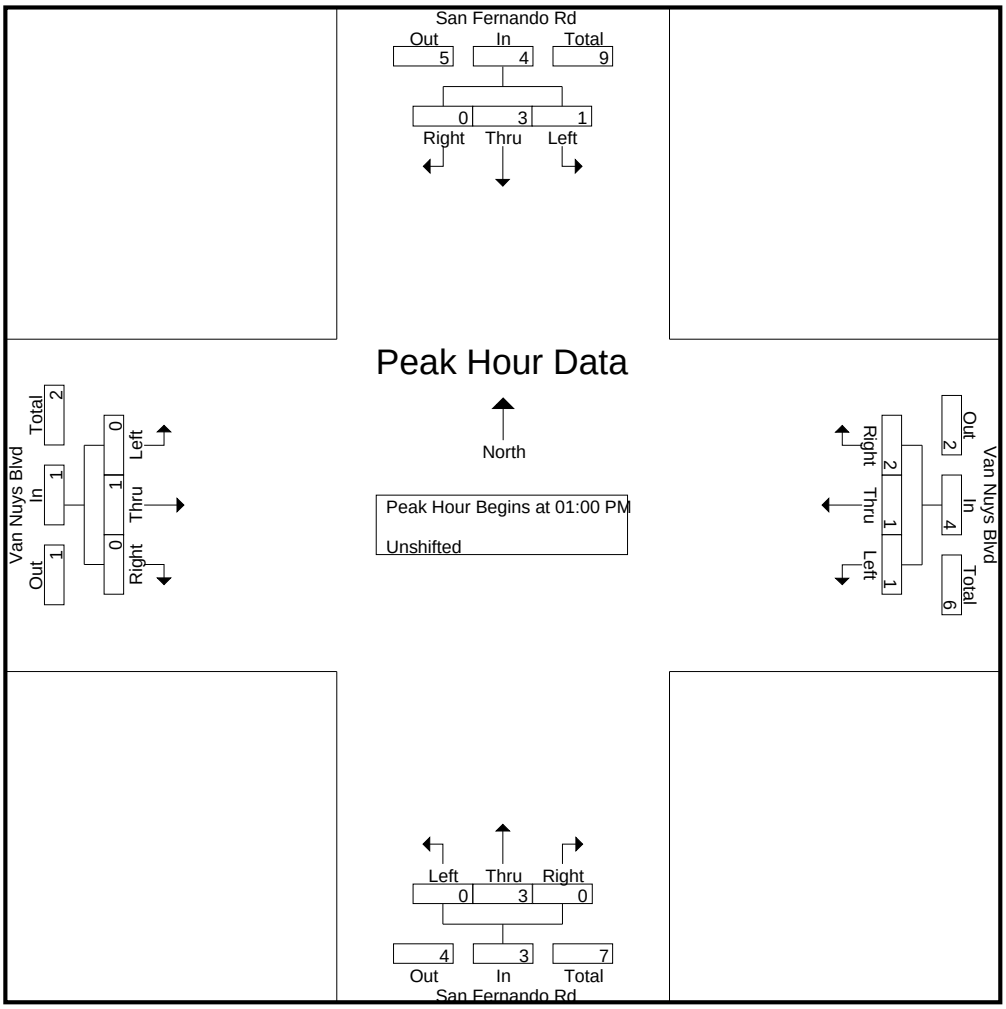

CITY TRAFFIC COUNTERS

626.991.7522

www.ctcounters.com

File Name : SanFernando_VanNuys_5axle
Site Code : 00000000
Start Date : 3/25/2015
Page No : 4

	San Fernando Rd Southbound				Van Nuys Blvd Westbound				San Fernando Rd Northbound				Van Nuys Blvd Eastbound				
Start Time	Left	Thru	Right	App. Total	Left	Thru	Right	App. Total	Left	Thru	Right	App. Total	Left	Thru	Right	App. Total	Int. Total
Peak Hour Analysis From 02:00 PM to 05:45 PM - Peak 1 of 1																	
Peak Hour for Entire Intersection Begins at 03:00 PM																	
03:00 PM	0	**2**	0	2	0	0	0	0	0	0	0	0	0	**1**	0	**1**	3
03:15 PM	**3**	0	0	**3**	0	0	0	0	0	0	**1**	1	**1**	0	0	1	5
03:30 PM	0	0	0	0	0	0	0	0	0	1	1	**2**	0	0	0	0	2
03:45 PM	0	2	0	2	0	**1**	0	**1**	0	**2**	0	2	0	1	0	1	**6**
Total Volume	3	4	0	7	0	1	0	1	0	3	2	5	1	2	0	3	16
% App. Total	42.9	57.1	0		0	100	0		0	60	40		33.3	66.7	0		
PHF	.250	.500	.000	.583	.000	.250	.000	.250	.000	.375	.500	.625	.250	.500	.000	.750	.667

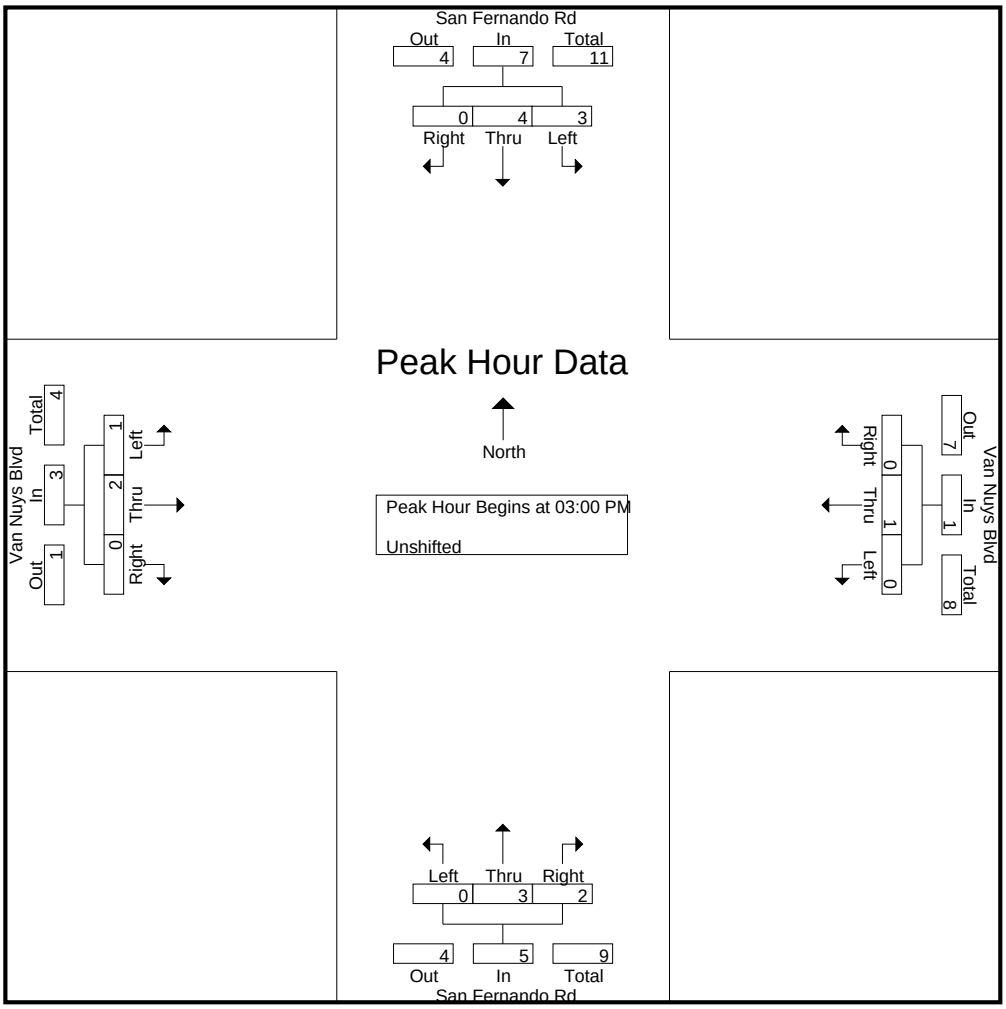

CITY TRAFFIC COUNTERS

626.991.7522

www.ctcounters.com

File Name : SanFernando_Pierce
Site Code : 00000000
Start Date : 3/25/2015
Page No : 1

Groups Printed- Unshifted

	San Fernando Rd Southbound			Pierce St Westbound			San Fernando Rd Northbound			Pierce St Eastbound			
Start Time	Left	Thru	Right	Left	Thru	Right	Left	Thru	Right	Left	Thru	Right	Int. Total
07:00 AM	3	170	13	50	22	2	4	90	22	22	17	6	421
07:15 AM	4	282	12	60	15	9	5	108	25	25	29	10	584
07:30 AM	0	291	19	59	29	10	4	120	51	9	41	8	641
07:45 AM	12	232	31	37	54	15	12	109	54	21	46	9	632
Total	19	975	75	206	120	36	25	427	152	77	133	33	2278
08:00 AM	2	207	20	37	37	12	10	74	38	15	19	9	480
08:15 AM	4	184	17	40	18	6	7	70	8	4	10	6	374
08:30 AM	7	171	18	20	12	4	5	89	16	4	7	7	360
08:45 AM	4	114	14	23	10	3	8	51	12	7	6	5	257
Total	17	676	69	120	77	25	30	284	74	30	42	27	1471
09:00 AM	5	105	27	20	9	1	7	63	13	13	9	6	278
09:15 AM	2	106	13	18	11	4	3	65	11	10	3	5	251
09:30 AM	11	106	17	19	12	1	3	95	17	10	9	15	315
09:45 AM	3	87	16	24	16	3	7	68	17	9	12	5	267
Total	21	404	73	81	48	9	20	291	58	42	33	31	1111
12:00 PM	4	106	17	12	11	7	9	111	22	5	13	7	324
12:15 PM	5	105	21	21	19	8	5	91	27	12	11	6	331
12:30 PM	6	119	17	17	20	9	6	94	19	15	19	3	344
12:45 PM	2	104	12	28	10	7	7	77	22	9	6	5	289
Total	17	434	67	78	60	31	27	373	90	41	49	21	1288
01:00 PM	5	131	23	28	12	2	4	105	26	18	11	14	379
01:15 PM	3	95	26	18	17	6	7	97	20	16	13	3	321
01:30 PM	8	118	14	16	7	8	6	104	23	8	22	2	336
01:45 PM	4	120	21	12	11	7	5	112	23	10	17	6	348
Total	20	464	84	74	47	23	22	418	92	52	63	25	1384
03:00 PM	7	118	16	47	30	14	5	93	19	12	21	11	393
03:15 PM	5	137	19	17	21	6	12	137	39	13	23	10	439
03:30 PM	7	132	22	35	37	9	14	129	29	21	20	9	464
03:45 PM	4	122	20	26	24	11	14	128	42	19	19	8	437
Total	23	509	77	125	112	40	45	487	129	65	83	38	1733
04:00 PM	7	144	20	39	29	10	14	150	42	17	34	14	520
04:15 PM	10	151	21	37	24	9	14	139	47	15	25	9	501
04:30 PM	7	132	22	35	34	18	7	156	29	13	26	8	487
04:45 PM	8	165	27	20	22	10	13	175	63	15	24	8	550
Total	32	592	90	131	109	47	48	620	181	60	109	39	2058
05:00 PM	10	134	25	46	40	6	10	164	32	13	37	10	527
05:15 PM	10	149	20	31	20	11	15	186	51	21	38	14	566
05:30 PM	5	120	26	21	25	6	7	143	48	17	32	15	465
05:45 PM	9	152	20	28	25	5	18	144	56	16	28	16	517
Total	34	555	91	126	110	28	50	637	187	67	135	55	2075
Grand Total	183	4609	626	941	683	239	267	3537	963	434	647	269	13398
Apprch %	3.4	85.1	11.6	50.5	36.7	12.8	5.6	74.2	20.2	32.1	47.9	19.9	
Total %	1.4	34.4	4.7	7	5.1	1.8	2	26.4	7.2	3.2	4.8	2	

CITY TRAFFIC COUNTERS

626.991.7522

www.ctcounters.com

File Name : SanFernando_Pierce
Site Code : 00000000
Start Date : 3/25/2015
Page No : 2

	San Fernando Rd Southbound				Pierce St Westbound				San Fernando Rd Northbound				Pierce St Eastbound				
Start Time	Left	Thru	Right	App. Total	Left	Thru	Right	App. Total	Left	Thru	Right	App. Total	Left	Thru	Right	App. Total	Int. Total
Peak Hour Analysis From 07:00 AM to 09:45 AM - Peak 1 of 1																	
Peak Hour for Entire Intersection Begins at 07:15 AM																	
07:15 AM	4	282	12	298	**60**	15	9	84	5	108	25	138	**25**	29	**10**	64	584
07:30 AM	0	**291**	19	**310**	59	29	10	98	4	**120**	51	**175**	9	41	8	58	**641**
07:45 AM	**12**	232	**31**	275	37	**54**	**15**	**106**	**12**	109	**54**	175	21	**46**	9	**76**	632
08:00 AM	2	207	20	229	37	37	12	86	10	74	38	122	15	19	9	43	480
Total Volume	18	1012	82	1112	193	135	46	374	31	411	168	610	70	135	36	241	2337
% App. Total	1.6	91	7.4		51.6	36.1	12.3		5.1	67.4	27.5		29	56	14.9		
PHF	.375	.869	.661	.897	.804	.625	.767	.882	.646	.856	.778	.871	.700	.734	.900	.793	.911

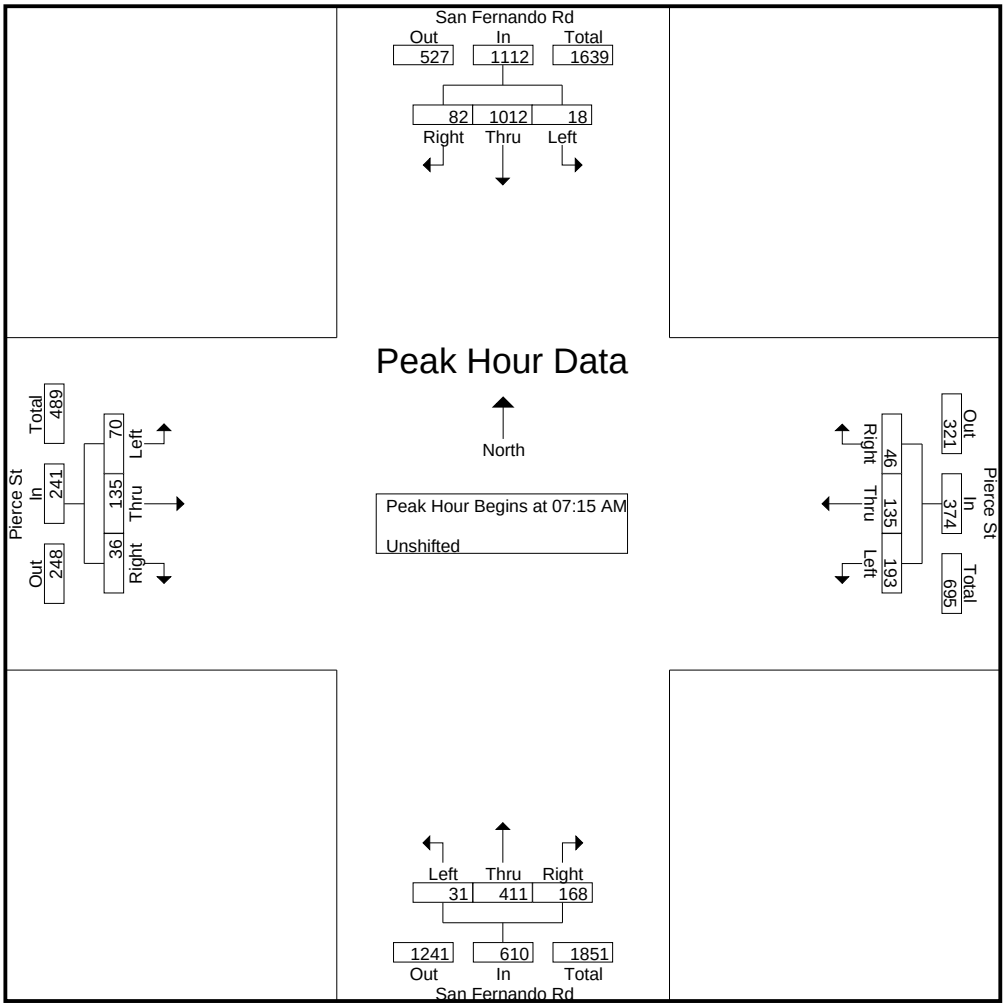

CITY TRAFFIC COUNTERS

626.991.7522

www.ctcounters.com

File Name : SanFernando_Pierce
Site Code : 00000000
Start Date : 3/25/2015
Page No : 3

	San Fernando Rd Southbound				Pierce St Westbound				San Fernando Rd Northbound				Pierce St Eastbound				
Start Time	Left	Thru	Right	App. Total	Left	Thru	Right	App. Total	Left	Thru	Right	App. Total	Left	Thru	Right	App. Total	Int. Total
Peak Hour Analysis From 10:00 AM to 01:45 PM - Peak 1 of 1																	
Peak Hour for Entire Intersection Begins at 01:00 PM																	
01:00 PM	5	**131**	23	**159**	**28**	12	2	**42**	4	105	**26**	135	**18**	11	**14**	**43**	**379**
01:15 PM	3	95	**26**	124	18	**17**	6	41	**7**	97	20	124	16	13	3	32	321
01:30 PM	**8**	118	14	140	16	7	**8**	31	6	104	23	133	8	**22**	2	32	336
01:45 PM	4	120	21	145	12	11	7	30	5	**112**	23	**140**	10	17	6	33	348
Total Volume	20	464	84	568	74	47	23	144	22	418	92	532	52	63	25	140	1384
% App. Total	3.5	81.7	14.8		51.4	32.6	16		4.1	78.6	17.3		37.1	45	17.9		
PHF	.625	.885	.808	.893	.661	.691	.719	.857	.786	.933	.885	.950	.722	.716	.446	.814	.913

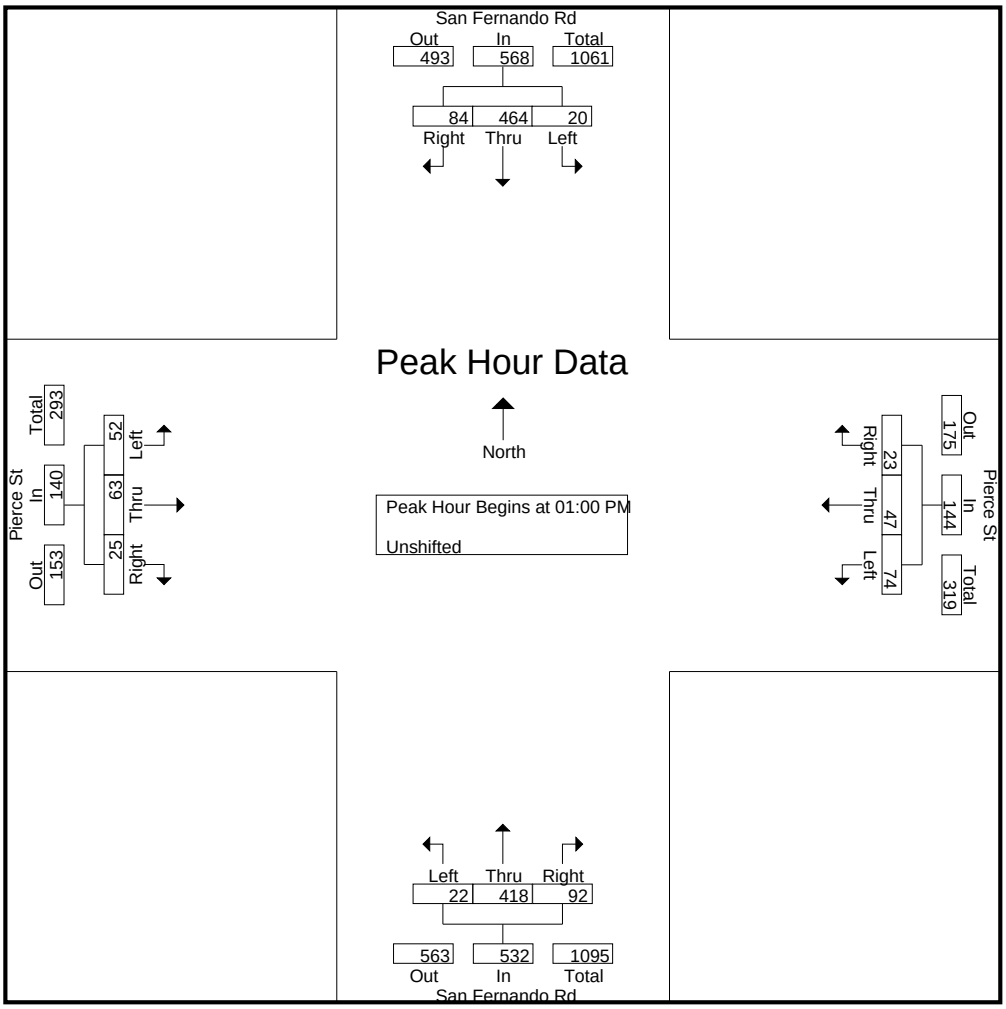

CITY TRAFFIC COUNTERS

626.991.7522

www.ctcounters.com

File Name : SanFernando_Pierce
Site Code : 00000000
Start Date : 3/25/2015
Page No : 4

	San Fernando Rd Southbound				Pierce St Westbound				San Fernando Rd Northbound				Pierce St Eastbound				
Start Time	Left	Thru	Right	App. Total	Left	Thru	Right	App. Total	Left	Thru	Right	App. Total	Left	Thru	Right	App. Total	Int. Total
Peak Hour Analysis From 02:00 PM to 05:45 PM - Peak 1 of 1																	
Peak Hour for Entire Intersection Begins at 04:30 PM																	
04:30 PM	7	132	22	161	35	34	**18**	87	7	156	29	192	13	26	8	47	487
04:45 PM	8	**165**	**27**	**200**	20	22	10	52	13	175	**63**	251	15	24	8	47	550
05:00 PM	**10**	134	25	169	**46**	**40**	6	**92**	10	164	32	206	13	37	10	60	527
05:15 PM	10	149	20	179	31	20	11	62	**15**	**186**	51	**252**	**21**	**38**	**14**	**73**	**566**
Total Volume	35	580	94	709	132	116	45	293	45	681	175	901	62	125	40	227	2130
% App. Total	4.9	81.8	13.3		45.1	39.6	15.4		5	75.6	19.4		27.3	55.1	17.6		
PHF	.875	.879	.870	.886	.717	.725	.625	.796	.750	.915	.694	.894	.738	.822	.714	.777	.941

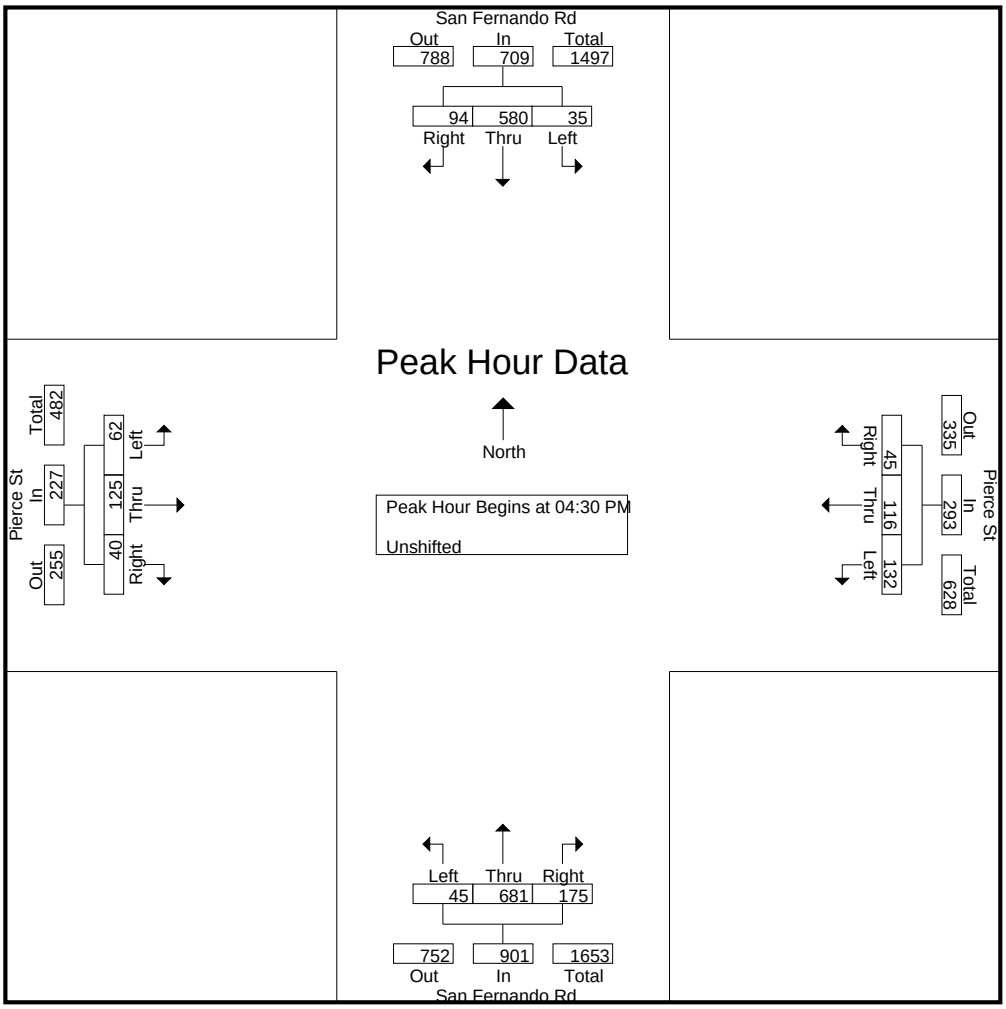

CITY TRAFFIC COUNTERS

626.991.7522

www.ctcounters.com

File Name : SanFernando_Pierce_Motorcycles
Site Code : 00000000
Start Date : 3/25/2015
Page No : 1

Groups Printed- Bank 2

	San Fernando Rd Southbound			Pierce St Westbound			San Fernando Rd Northbound			Pierce St Eastbound			
Start Time	Left	Thru	Right	Left	Thru	Right	Left	Thru	Right	Left	Thru	Right	Int. Total
07:00 AM	0	0	0	0	0	0	0	1	0	0	0	0	1
07:30 AM	0	0	0	0	0	0	0	1	0	0	0	0	1
Total	0	0	0	0	0	0	0	2	0	0	0	0	2
08:30 AM	0	1	0	0	0	0	0	0	0	0	0	0	1
Total	0	1	0	0	0	0	0	0	0	0	0	0	1
09:00 AM	1	0	0	0	0	0	0	0	0	0	0	0	1
09:15 AM	0	0	0	1	0	0	0	0	0	0	0	0	1
Total	1	0	0	1	0	0	0	0	0	0	0	0	2
12:15 PM	0	0	0	0	0	0	0	1	0	0	0	0	1
12:30 PM	0	0	0	0	1	0	0	0	0	0	0	0	1
12:45 PM	0	1	0	0	0	0	0	1	0	0	0	0	2
Total	0	1	0	0	1	0	0	2	0	0	0	0	4
01:15 PM	0	1	0	0	0	0	0	0	0	0	0	0	1
01:45 PM	0	0	0	0	0	0	0	0	0	1	0	0	1
Total	0	1	0	0	0	0	0	0	0	1	0	0	2
03:00 PM	0	1	0	0	0	0	0	1	0	0	0	0	2
03:15 PM	0	0	0	0	0	0	0	1	0	0	0	0	1
03:30 PM	0	0	0	0	0	0	0	1	0	0	0	0	1
03:45 PM	0	1	0	0	0	0	0	0	0	0	0	0	1
Total	0	2	0	0	0	0	0	3	0	0	0	0	5
04:00 PM	0	2	0	0	0	0	0	0	0	0	0	0	2
04:30 PM	0	2	0	0	0	0	0	0	0	0	0	0	2
04:45 PM	0	3	0	0	0	0	0	1	0	0	0	0	4
Total	0	7	0	0	0	0	0	1	0	0	0	0	8
05:00 PM	0	0	0	0	0	0	0	1	0	0	0	0	1
05:15 PM	0	1	0	0	0	0	0	1	0	0	0	0	2
05:45 PM	0	1	0	0	0	0	0	0	0	0	0	0	1
Total	0	2	0	0	0	0	0	2	0	0	0	0	4
Grand Total	1	14	0	1	1	0	0	10	0	1	0	0	28
Apprch %	6.7	93.3	0	50	50	0	0	100	0	100	0	0	
Total %	3.6	50	0	3.6	3.6	0	0	35.7	0	3.6	0	0	

CITY TRAFFIC COUNTERS

626.991.7522

www.ctcounters.com

File Name : SanFernando_Pierce_Motorcycles
Site Code : 00000000
Start Date : 3/25/2015
Page No : 2

	San Fernando Rd Southbound				Pierce St Westbound				San Fernando Rd Northbound				Pierce St Eastbound				
Start Time	Left	Thru	Right	App. Total	Left	Thru	Right	App. Total	Left	Thru	Right	App. Total	Left	Thru	Right	App. Total	Int. Total
Peak Hour Analysis From 07:00 AM to 09:45 AM - Peak 1 of 1																	
Peak Hour for Entire Intersection Begins at 08:30 AM																	
08:30 AM	0	**1**	0	**1**	0	0	0	0	0	0	0	0	0	0	0	0	**1**
08:45 AM	0	0	0	0	0	0	0	0	0	0	0	0	0	0	0	0	0
09:00 AM	**1**	0	0	1	0	0	0	0	0	0	0	0	0	0	0	0	1
09:15 AM	0	0	0	0	**1**	0	0	**1**	0	0	0	0	0	0	0	0	1
Total Volume	1	1	0	2	1	0	0	1	0	0	0	0	0	0	0	0	3
% App. Total	50	50	0		100	0	0		0	0	0		0	0	0		
PHF	.250	.250	.000	.500	.250	.000	.000	.250	.000	.000	.000	.000	.000	.000	.000	.000	.750

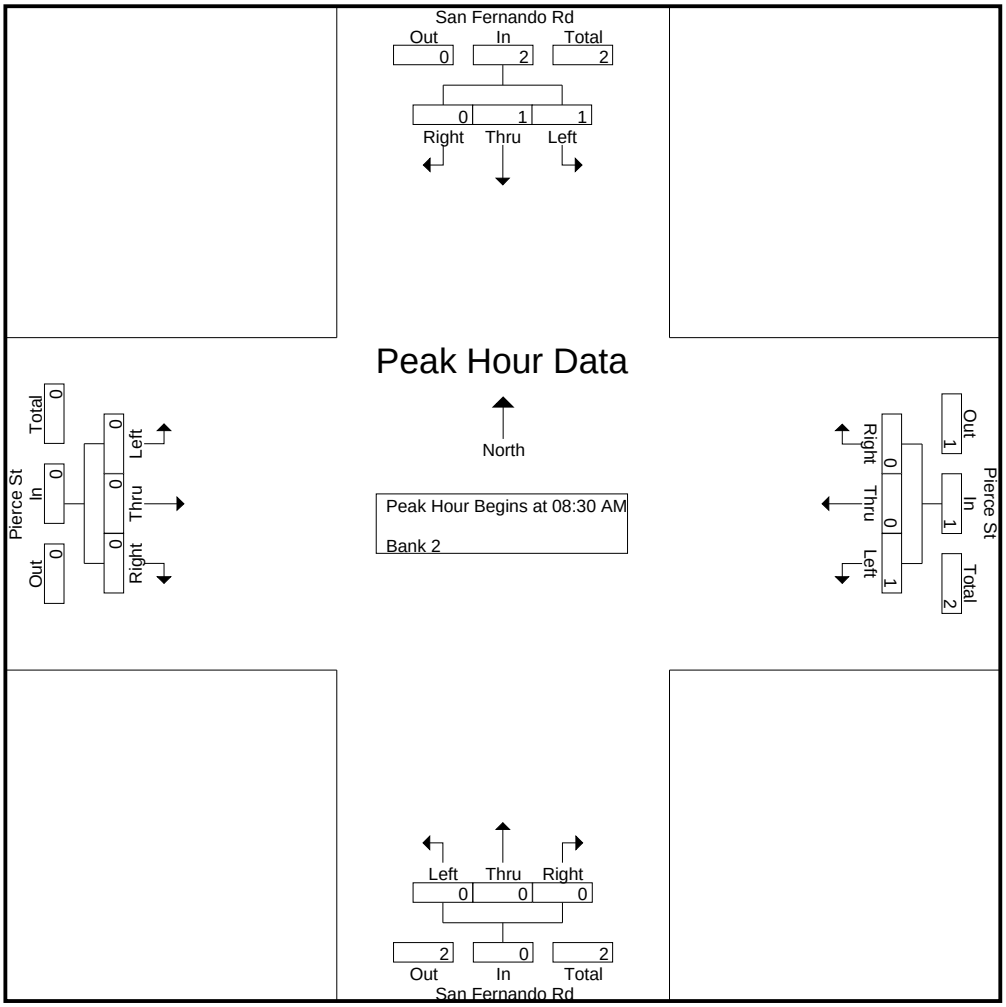

CITY TRAFFIC COUNTERS

626.991.7522

www.ctcounters.com

File Name : SanFernando_Pierce_Motorcycles
Site Code : 00000000
Start Date : 3/25/2015
Page No : 3

	San Fernando Rd Southbound				Pierce St Westbound				San Fernando Rd Northbound				Pierce St Eastbound				
Start Time	Left	Thru	Right	App. Total	Left	Thru	Right	App. Total	Left	Thru	Right	App. Total	Left	Thru	Right	App. Total	Int. Total
Peak Hour Analysis From 10:00 AM to 01:45 PM - Peak 1 of 1																	
Peak Hour for Entire Intersection Begins at 12:00 PM																	
12:00 PM	0	0	0	0	0	0	0	0	0	0	0	0	0	0	0	0	0
12:15 PM	0	0	0	0	0	0	0	0	0	**1**	0	**1**	0	0	0	0	1
12:30 PM	0	0	0	0	0	**1**	0	**1**	0	0	0	0	0	0	0	0	1
12:45 PM	0	**1**	0	**1**	0	0	0	0	0	1	0	1	0	0	0	0	**2**
Total Volume	0	1	0	1	0	1	0	1	0	2	0	2	0	0	0	0	4
% App. Total	0	100	0		0	100	0		0	100	0		0	0	0		
PHF	.000	.250	.000	.250	.000	.250	.000	.250	.000	.500	.000	.500	.000	.000	.000	.000	.500

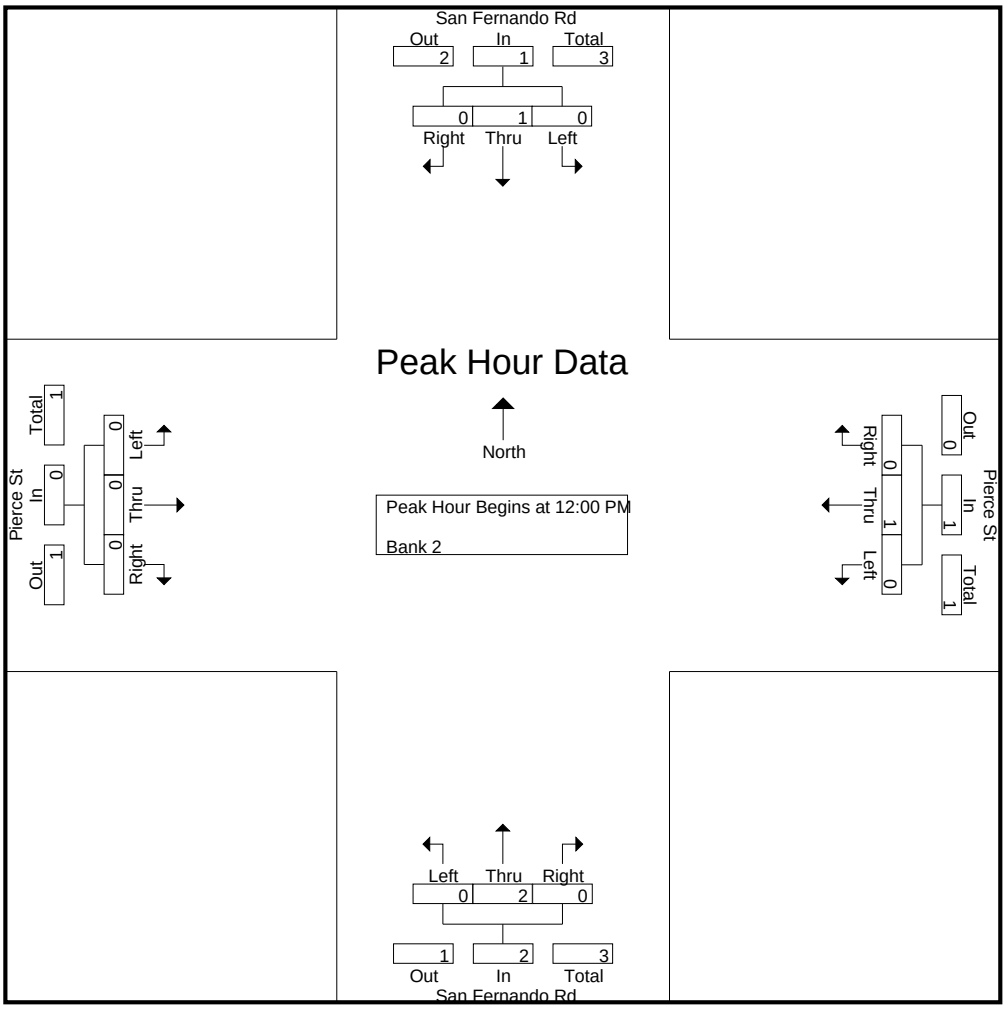

CITY TRAFFIC COUNTERS

626.991.7522

www.ctcounters.com

File Name : SanFernando_Pierce_Motorcycles
Site Code : 00000000
Start Date : 3/25/2015
Page No : 4

	San Fernando Rd Southbound				Pierce St Westbound				San Fernando Rd Northbound				Pierce St Eastbound				
Start Time	Left	Thru	Right	App. Total	Left	Thru	Right	App. Total	Left	Thru	Right	App. Total	Left	Thru	Right	App. Total	Int. Total
Peak Hour Analysis From 02:00 PM to 05:45 PM - Peak 1 of 1																	
Peak Hour for Entire Intersection Begins at 04:30 PM																	
04:30 PM	0	2	0	2	0	0	0	0	0	0	0	0	0	0	0	0	2
04:45 PM	0	**3**	0	**3**	0	0	0	0	0	**1**	0	**1**	0	0	0	0	**4**
05:00 PM	0	0	0	0	0	0	0	0	0	1	0	1	0	0	0	0	1
05:15 PM	0	1	0	1	0	0	0	0	0	1	0	1	0	0	0	0	2
Total Volume	0	6	0	6	0	0	0	0	0	3	0	3	0	0	0	0	9
% App. Total	0	100	0		0	0	0		0	100	0		0	0	0		
PHF	.000	.500	.000	.500	.000	.000	.000	.000	.000	.750	.000	.750	.000	.000	.000	.000	.563

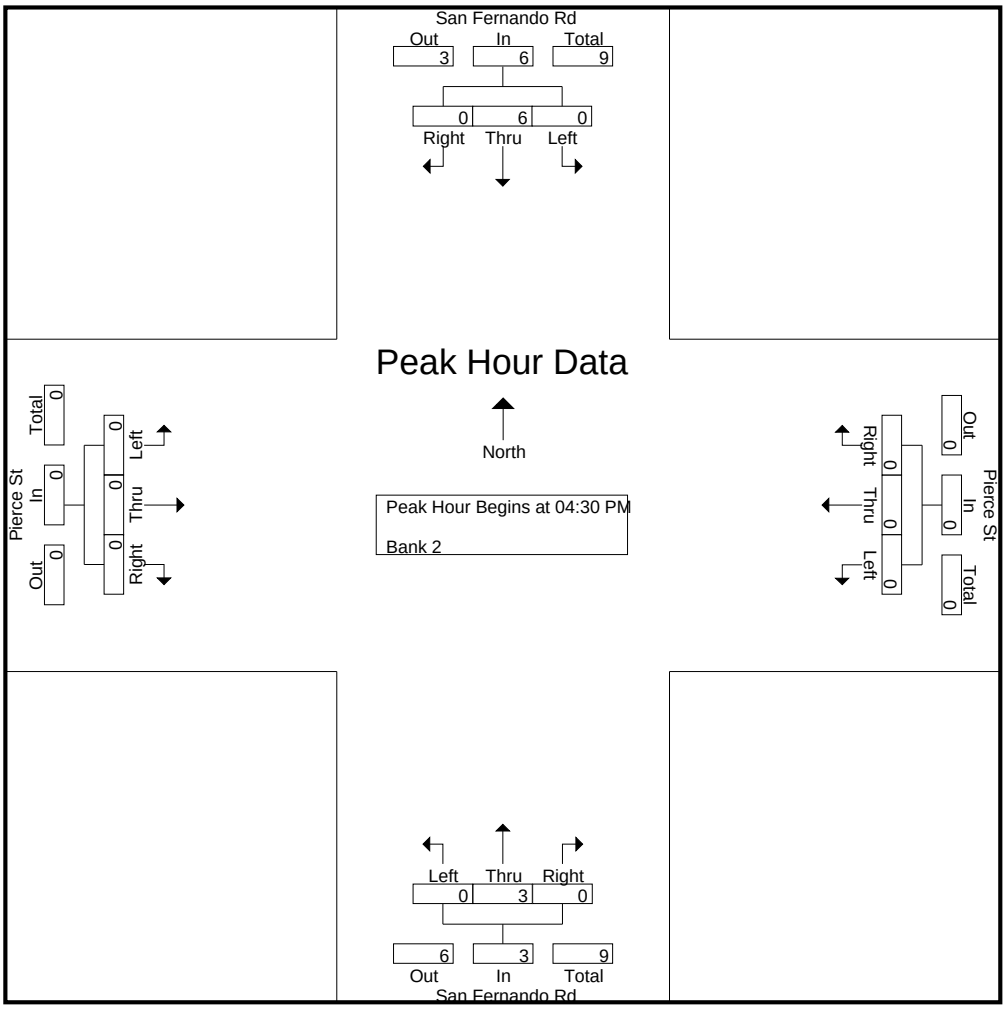

CITY TRAFFIC COUNTERS

626.991.7522

www.ctcounters.com

File Name : SanFernando_Pierce_Buses
Site Code : 00000000
Start Date : 3/25/2015
Page No : 1

Groups Printed- Bank 1

	San Fernando Rd Southbound			Pierce St Westbound			San Fernando Rd Northbound			Pierce St Eastbound			
Start Time	Left	Thru	Right	Left	Thru	Right	Left	Thru	Right	Left	Thru	Right	Int. Total
07:00 AM	0	2	0	0	0	0	0	1	2	0	0	0	5
07:15 AM	0	3	0	0	1	0	0	2	0	0	1	0	7
07:30 AM	0	1	0	0	0	0	0	1	0	0	0	0	2
07:45 AM	0	2	0	0	0	0	0	2	0	0	0	0	4
Total	0	8	0	0	1	0	0	6	2	0	1	0	18
08:00 AM	0	3	0	0	0	0	0	1	0	0	0	0	4
08:15 AM	0	1	0	0	0	0	0	2	0	0	0	0	3
08:30 AM	0	2	0	0	0	0	0	3	0	0	0	0	5
08:45 AM	0	2	0	0	0	0	0	2	0	0	0	0	4
Total	0	8	0	0	0	0	0	8	0	0	0	0	16
09:00 AM	0	1	0	0	0	0	0	2	0	0	0	0	3
09:15 AM	0	1	0	0	0	0	0	2	0	0	0	0	3
09:30 AM	0	1	0	0	0	0	0	0	0	0	0	0	1
09:45 AM	0	1	0	0	0	0	0	1	0	0	0	0	2
Total	0	4	0	0	0	0	0	5	0	0	0	0	9
12:00 PM	0	1	0	0	0	0	0	0	0	0	0	0	1
12:15 PM	0	3	0	0	0	0	0	2	0	0	0	0	5
12:45 PM	0	2	0	0	0	0	0	0	0	0	0	0	2
Total	0	6	0	0	0	0	0	2	0	0	0	0	8
01:00 PM	0	0	0	0	0	0	0	1	0	0	0	0	1
01:15 PM	0	1	0	0	0	0	0	1	0	0	0	0	2
01:30 PM	0	2	0	0	0	0	0	1	0	0	0	0	3
01:45 PM	0	1	0	0	0	0	0	1	0	0	0	0	2
Total	0	4	0	0	0	0	0	4	0	0	0	0	8
03:00 PM	0	1	0	0	0	0	0	1	0	0	0	0	2
03:15 PM	0	2	0	0	0	0	0	1	0	0	0	0	3
03:30 PM	0	2	0	0	0	0	0	2	0	0	0	0	4
03:45 PM	0	3	0	0	0	0	0	0	0	0	0	0	3
Total	0	8	0	0	0	0	0	4	0	0	0	0	12
04:00 PM	0	2	0	0	0	0	0	0	0	0	0	0	2
04:15 PM	0	1	0	0	0	0	0	3	0	0	0	0	4
04:30 PM	0	2	0	0	0	0	0	1	0	0	0	0	3
04:45 PM	0	0	0	0	0	0	0	1	0	0	0	0	1
Total	0	5	0	0	0	0	0	5	0	0	0	0	10
05:00 PM	0	2	0	0	0	0	0	3	0	0	0	0	5
05:15 PM	0	0	0	0	0	0	0	1	0	0	0	0	1
05:30 PM	0	1	0	0	0	0	0	2	0	0	0	0	3
05:45 PM	0	1	0	0	0	0	0	1	0	0	0	0	2
Total	0	4	0	0	0	0	0	7	0	0	0	0	11
Grand Total	0	47	0	0	1	0	0	41	2	0	1	0	92
Apprch %	0	100	0	0	100	0	0	95.3	4.7	0	100	0	
Total %	0	51.1	0	0	1.1	0	0	44.6	2.2	0	1.1	0	

CITY TRAFFIC COUNTERS

626.991.7522

www.ctcounters.com

File Name : SanFernando_Pierce_Buses
Site Code : 00000000
Start Date : 3/25/2015
Page No : 2

	San Fernando Rd Southbound				Pierce St Westbound				San Fernando Rd Northbound				Pierce St Eastbound				
Start Time	Left	Thru	Right	App. Total	Left	Thru	Right	App. Total	Left	Thru	Right	App. Total	Left	Thru	Right	App. Total	Int. Total
Peak Hour Analysis From 07:00 AM to 09:45 AM - Peak 1 of 1																	
Peak Hour for Entire Intersection Begins at 07:00 AM																	
07:00 AM	0	2	0	2	0	0	0	0	0	1	**2**	**3**	0	0	0	0	5
07:15 AM	0	**3**	0	**3**	0	**1**	0	**1**	0	**2**	0	2	0	**1**	0	**1**	**7**
07:30 AM	0	1	0	1	0	0	0	0	0	1	0	1	0	0	0	0	2
07:45 AM	0	2	0	2	0	0	0	0	0	2	0	2	0	0	0	0	4
Total Volume	0	8	0	8	0	1	0	1	0	6	2	8	0	1	0	1	18
% App. Total	0	100	0		0	100	0		0	75	25		0	100	0		
PHF	.000	.667	.000	.667	.000	.250	.000	.250	.000	.750	.250	.667	.000	.250	.000	.250	.643

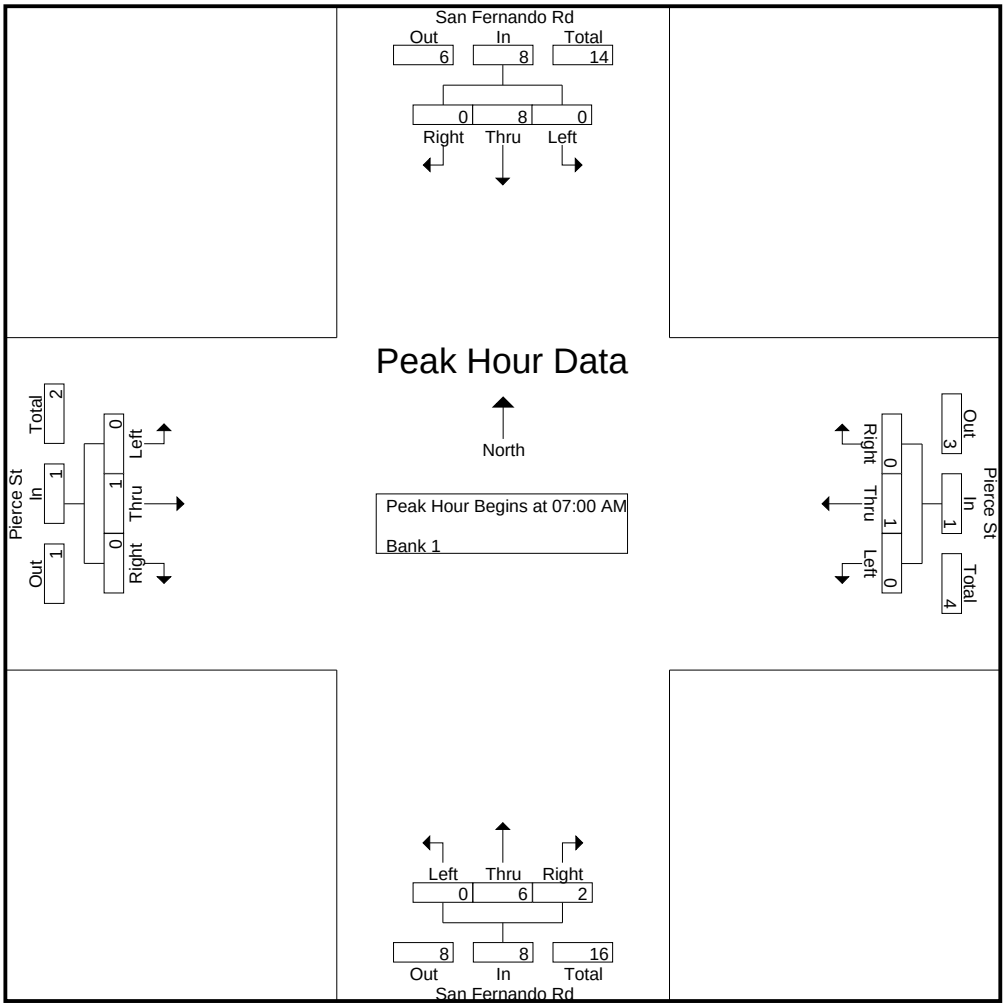

CITY TRAFFIC COUNTERS

626.991.7522

www.ctcounters.com

File Name : SanFernando_Pierce_Buses
Site Code : 00000000
Start Date : 3/25/2015
Page No : 3

	San Fernando Rd Southbound				Pierce St Westbound				San Fernando Rd Northbound				Pierce St Eastbound				
Start Time	Left	Thru	Right	App. Total	Left	Thru	Right	App. Total	Left	Thru	Right	App. Total	Left	Thru	Right	App. Total	Int. Total
Peak Hour Analysis From 10:00 AM to 01:45 PM - Peak 1 of 1																	
Peak Hour for Entire Intersection Begins at 12:00 PM																	
12:00 PM	0	1	0	1	0	0	0	0	0	0	0	0	0	0	0	0	1
12:15 PM	0	**3**	0	**3**	0	0	0	0	0	**2**	0	**2**	0	0	0	0	**5**
12:30 PM	0	0	0	0	0	0	0	0	0	0	0	0	0	0	0	0	0
12:45 PM	0	2	0	2	0	0	0	0	0	0	0	0	0	0	0	0	2
Total Volume	0	6	0	6	0	0	0	0	0	2	0	2	0	0	0	0	8
% App. Total	0	100	0		0	0	0		0	100	0		0	0	0		
PHF	.000	.500	.000	.500	.000	.000	.000	.000	.000	.250	.000	.250	.000	.000	.000	.000	.400

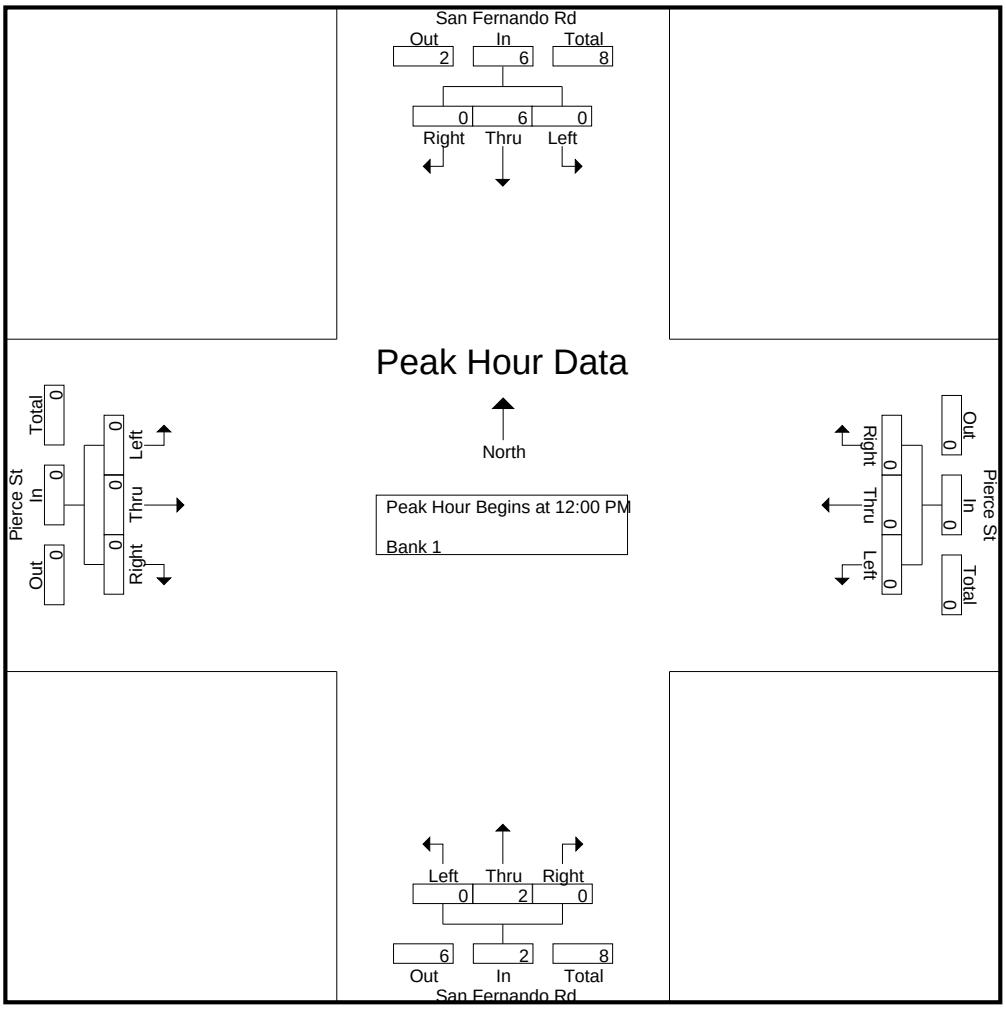

CITY TRAFFIC COUNTERS

626.991.7522

www.ctcounters.com

File Name : SanFernando_Pierce_Buses
Site Code : 00000000
Start Date : 3/25/2015
Page No : 4

	San Fernando Rd Southbound				Pierce St Westbound				San Fernando Rd Northbound				Pierce St Eastbound				
Start Time	Left	Thru	Right	App. Total	Left	Thru	Right	App. Total	Left	Thru	Right	App. Total	Left	Thru	Right	App. Total	Int. Total
Peak Hour Analysis From 02:00 PM to 05:45 PM - Peak 1 of 1																	
Peak Hour for Entire Intersection Begins at 03:30 PM																	
03:30 PM	0	2	0	2	0	0	0	0	0	2	0	2	0	0	0	0	**4**
03:45 PM	0	**3**	0	**3**	0	0	0	0	0	0	0	0	0	0	0	0	3
04:00 PM	0	2	0	2	0	0	0	0	0	0	0	0	0	0	0	0	2
04:15 PM	0	1	0	1	0	0	0	0	0	**3**	0	**3**	0	0	0	0	4
Total Volume	0	8	0	8	0	0	0	0	0	5	0	5	0	0	0	0	13
% App. Total	0	100	0		0	0	0		0	100	0		0	0	0		
PHF	.000	.667	.000	.667	.000	.000	.000	.000	.000	.417	.000	.417	.000	.000	.000	.000	.813

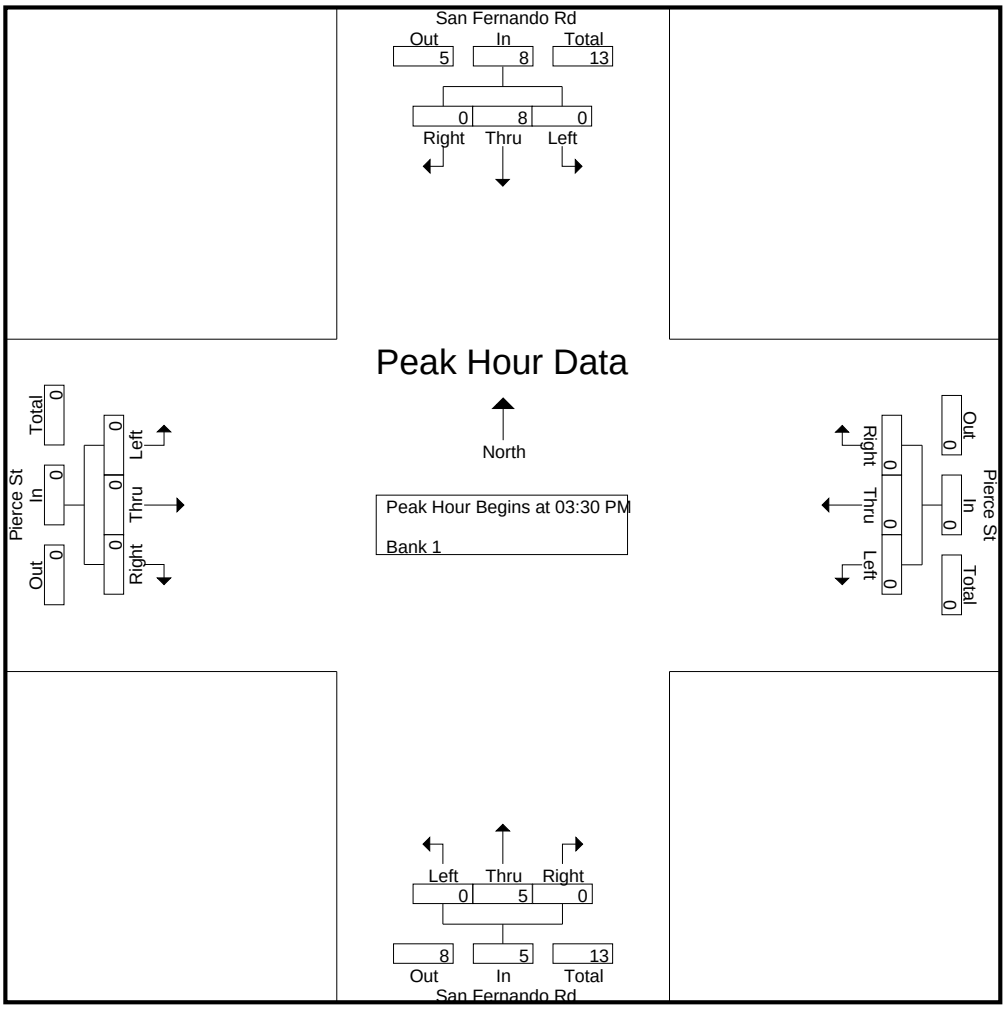

CITY TRAFFIC COUNTERS

626.991.7522

www.ctcounters.com

File Name : SanFernando_Pierce_2axle
Site Code : 00000000
Start Date : 3/25/2015
Page No : 1

Groups Printed- Unshifted

	San Fernando Rd Southbound			Pierce St Westbound			San Fernando Rd Northbound			Pierce St Eastbound			
Start Time	Left	Thru	Right	Left	Thru	Right	Left	Thru	Right	Left	Thru	Right	Int. Total
07:00 AM	0	9	0	0	0	0	0	6	0	0	0	0	15
07:15 AM	0	6	1	0	0	0	0	1	1	0	0	0	9
07:30 AM	0	9	0	0	0	0	0	4	0	0	0	0	13
07:45 AM	0	6	0	0	0	0	0	3	0	2	0	2	13
Total	0	30	1	0	0	0	0	14	1	2	0	2	50
08:00 AM	0	8	0	2	0	1	0	6	0	0	1	1	19
08:15 AM	0	7	1	2	0	0	0	2	1	0	0	1	14
08:30 AM	0	4	1	0	0	0	0	5	1	3	1	0	15
08:45 AM	0	6	0	1	0	0	0	9	1	0	0	0	17
Total	0	25	2	5	0	1	0	22	3	3	2	2	65
09:00 AM	1	9	0	0	0	0	0	6	0	0	0	1	17
09:15 AM	0	5	1	0	0	0	1	9	0	0	0	0	16
09:30 AM	1	8	0	0	0	0	0	9	0	0	0	1	19
09:45 AM	1	5	2	0	0	0	1	10	1	0	0	0	20
Total	3	27	3	0	0	0	2	34	1	0	0	2	72
12:00 PM	1	7	1	0	0	1	0	0	1	0	0	0	11
12:15 PM	0	8	1	1	0	0	0	8	2	2	1	0	23
12:30 PM	1	11	0	0	0	1	1	5	1	1	3	0	24
12:45 PM	1	6	1	1	1	0	0	10	1	0	0	0	21
Total	3	32	3	2	1	2	1	23	5	3	4	0	79
01:00 PM	1	4	0	1	0	0	0	6	0	0	2	0	14
01:15 PM	0	6	1	2	0	0	0	3	1	0	0	0	13
01:30 PM	1	10	0	5	1	1	0	9	2	0	0	0	29
01:45 PM	1	7	0	0	0	0	1	6	0	1	1	1	18
Total	3	27	1	8	1	1	1	24	3	1	3	1	74
03:00 PM	1	5	0	0	1	2	0	4	0	0	2	0	15
03:15 PM	0	7	0	0	0	0	0	3	0	0	1	0	11
03:30 PM	0	8	0	1	2	1	0	10	3	1	0	1	27
03:45 PM	0	4	0	0	0	1	0	5	2	1	1	0	14
Total	1	24	0	1	3	4	0	22	5	2	4	1	67
04:00 PM	0	3	2	2	0	2	0	8	0	0	1	0	18
04:15 PM	1	5	0	0	0	0	0	7	2	0	0	1	16
04:30 PM	0	4	1	1	3	0	0	3	0	1	0	0	13
04:45 PM	0	7	1	1	0	0	0	9	0	0	0	0	18
Total	1	19	4	4	3	2	0	27	2	1	1	1	65
05:00 PM	1	5	1	1	1	0	0	3	1	0	2	0	15
05:15 PM	4	2	1	0	0	0	0	2	2	2	0	0	13
05:30 PM	1	3	0	0	2	0	0	6	0	1	1	0	14
05:45 PM	0	3	1	0	0	1	1	4	3	1	0	0	14
Total	6	13	3	1	3	1	1	15	6	4	3	0	56
Grand Total	17	197	17	21	11	11	5	181	26	16	17	9	528
Apprch %	7.4	85.3	7.4	48.8	25.6	25.6	2.4	85.4	12.3	38.1	40.5	21.4	
Total %	3.2	37.3	3.2	4	2.1	2.1	0.9	34.3	4.9	3	3.2	1.7	

CITY TRAFFIC COUNTERS

626.991.7522

www.ctcounters.com

File Name : SanFernando_Pierce_2axle
Site Code : 00000000
Start Date : 3/25/2015
Page No : 2

	San Fernando Rd Southbound				Pierce St Westbound				San Fernando Rd Northbound				Pierce St Eastbound				
Start Time	Left	Thru	Right	App. Total	Left	Thru	Right	App. Total	Left	Thru	Right	App. Total	Left	Thru	Right	App. Total	Int. Total
Peak Hour Analysis From 07:00 AM to 09:45 AM - Peak 1 of 1																	
Peak Hour for Entire Intersection Begins at 09:00 AM																	
09:00 AM	**1**	**9**	0	**10**	0	0	0	0	0	6	0	6	0	0	**1**	**1**	17
09:15 AM	0	5	1	6	0	0	0	0	**1**	9	0	10	0	0	0	0	16
09:30 AM	1	8	0	9	0	0	0	0	0	9	0	9	0	0	1	1	19
09:45 AM	1	5	**2**	8	0	0	0	0	1	**10**	**1**	**12**	0	0	0	0	**20**
Total Volume	3	27	3	33	0	0	0	0	2	34	1	37	0	0	2	2	72
% App. Total	9.1	81.8	9.1		0	0	0		5.4	91.9	2.7		0	0	100		
PHF	.750	.750	.375	.825	.000	.000	.000	.000	.500	.850	.250	.771	.000	.000	.500	.500	.900

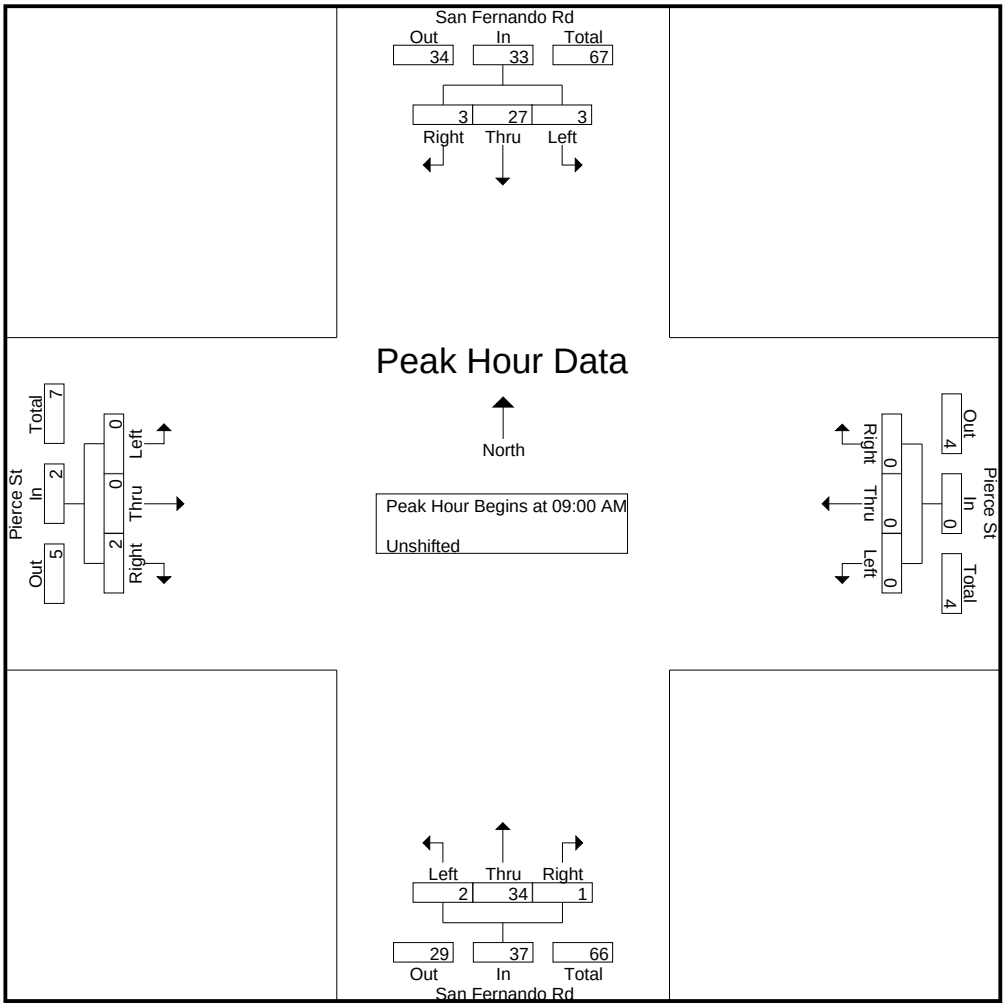

CITY TRAFFIC COUNTERS

626.991.7522

www.ctcounters.com

File Name : SanFernando_Pierce_2axle
Site Code : 00000000
Start Date : 3/25/2015
Page No : 3

	San Fernando Rd Southbound				Pierce St Westbound				San Fernando Rd Northbound				Pierce St Eastbound				
Start Time	Left	Thru	Right	App. Total	Left	Thru	Right	App. Total	Left	Thru	Right	App. Total	Left	Thru	Right	App. Total	Int. Total
Peak Hour Analysis From 10:00 AM to 01:45 PM - Peak 1 of 1																	
Peak Hour for Entire Intersection Begins at 12:15 PM																	
12:15 PM	0	8	**1**	9	**1**	0	0	1	0	8	**2**	10	**2**	1	0	3	23
12:30 PM	**1**	**11**	0	**12**	0	0	**1**	1	**1**	5	1	7	1	**3**	0	**4**	**24**
12:45 PM	1	6	1	8	1	**1**	0	**2**	0	**10**	1	**11**	0	0	0	0	21
01:00 PM	1	4	0	5	1	0	0	1	0	6	0	6	0	2	0	2	14
Total Volume	3	29	2	34	3	1	1	5	1	29	4	34	3	6	0	9	82
% App. Total	8.8	85.3	5.9		60	20	20		2.9	85.3	11.8		33.3	66.7	0		
PHF	.750	.659	.500	.708	.750	.250	.250	.625	.250	.725	.500	.773	.375	.500	.000	.563	.854

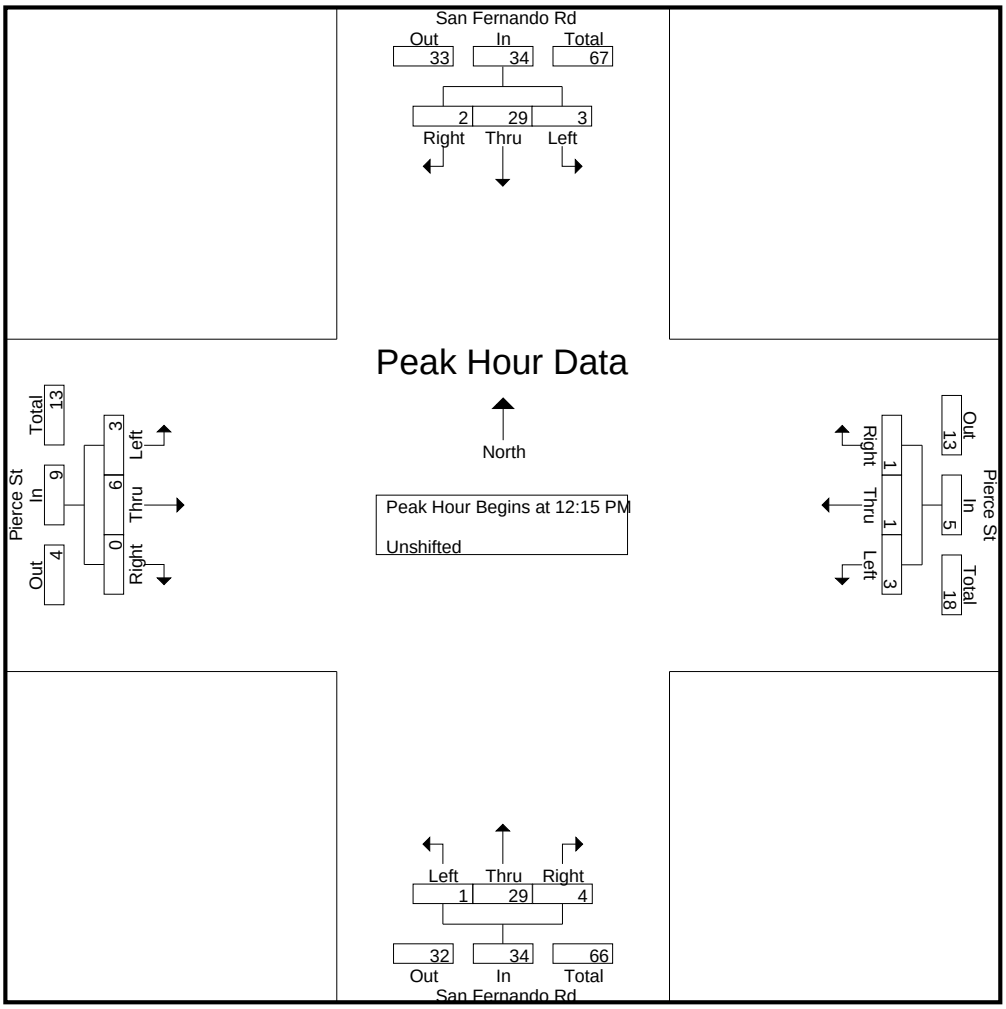

CITY TRAFFIC COUNTERS

626.991.7522

www.ctcounters.com

File Name : SanFernando_Pierce_2axle
Site Code : 00000000
Start Date : 3/25/2015
Page No : 4

	San Fernando Rd Southbound				Pierce St Westbound				San Fernando Rd Northbound				Pierce St Eastbound				
Start Time	Left	Thru	Right	App. Total	Left	Thru	Right	App. Total	Left	Thru	Right	App. Total	Left	Thru	Right	App. Total	Int. Total
Peak Hour Analysis From 02:00 PM to 05:45 PM - Peak 1 of 1																	
Peak Hour for Entire Intersection Begins at 03:30 PM																	
03:30 PM	0	**8**	0	**8**	1	**2**	1	**4**	0	**10**	**3**	**13**	**1**	0	**1**	**2**	**27**
03:45 PM	0	4	0	4	0	0	1	1	0	5	2	7	1	**1**	0	2	14
04:00 PM	0	3	**2**	5	**2**	0	**2**	4	0	8	0	8	0	1	0	1	18
04:15 PM	**1**	5	0	6	0	0	0	0	0	7	2	9	0	0	1	1	16
Total Volume	1	20	2	23	3	2	4	9	0	30	7	37	2	2	2	6	75
% App. Total	4.3	87	8.7		33.3	22.2	44.4		0	81.1	18.9		33.3	33.3	33.3		
PHF	.250	.625	.250	.719	.375	.250	.500	.563	.000	.750	.583	.712	.500	.500	.500	.750	.694

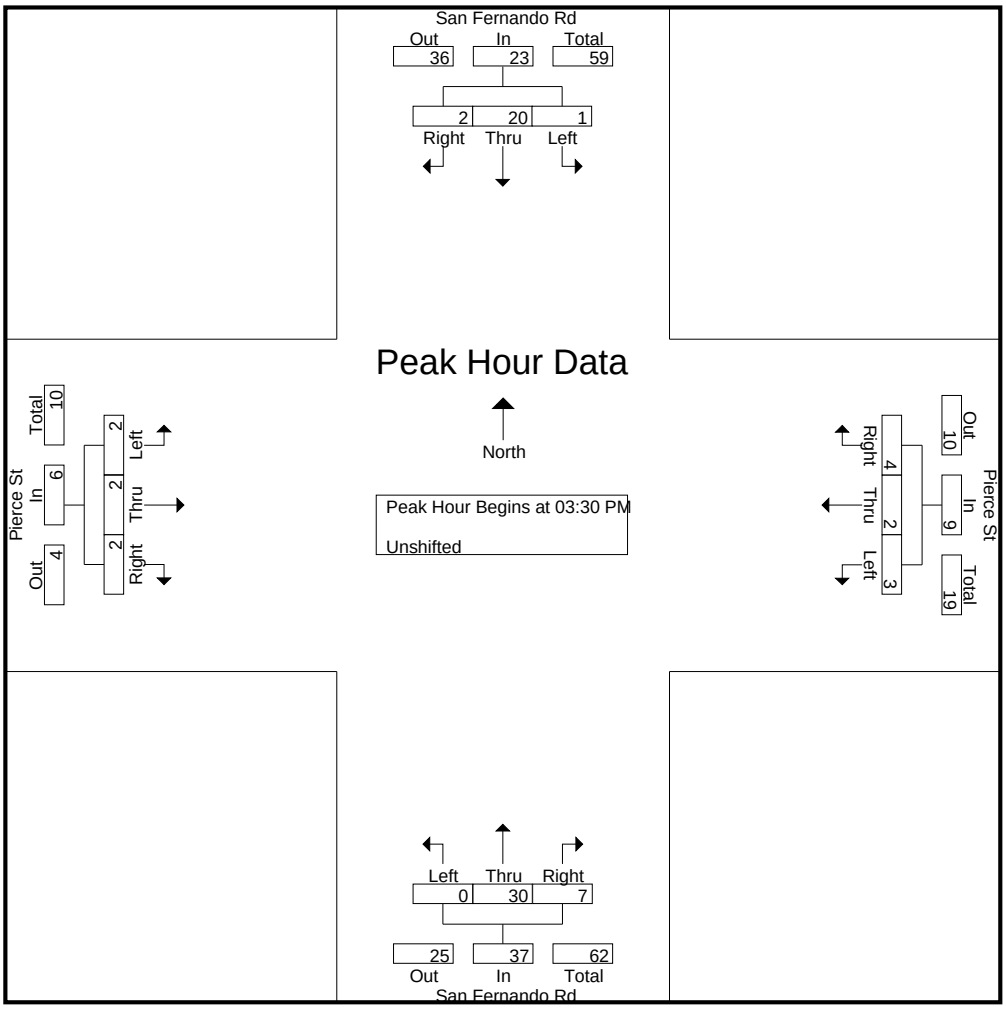

CITY TRAFFIC COUNTERS

626.991.7522

www.ctcounters.com

File Name : SanFernando_Pierce_3axle
Site Code : 00000000
Start Date : 3/25/2015
Page No : 1

Groups Printed- Bank 1

	San Fernando Rd Southbound			Pierce St Westbound			San Fernando Rd Northbound			Pierce St Eastbound			
Start Time	Left	Thru	Right	Left	Thru	Right	Left	Thru	Right	Left	Thru	Right	Int. Total
07:00 AM	0	5	0	0	0	0	0	1	0	0	0	0	6
07:15 AM	0	1	1	0	0	0	0	1	0	0	0	0	3
07:30 AM	0	2	0	1	0	0	0	0	0	0	0	0	3
07:45 AM	0	1	0	0	0	0	0	0	0	0	0	0	1
Total	0	9	1	1	0	0	0	2	0	0	0	0	13
08:00 AM	0	2	0	0	0	0	0	0	0	0	0	0	2
08:15 AM	0	1	0	0	0	0	0	1	0	0	0	0	2
08:30 AM	0	1	0	0	0	0	0	0	0	0	0	0	1
08:45 AM	0	1	0	0	0	0	1	0	1	0	0	0	3
Total	0	5	0	0	0	0	1	1	1	0	0	0	8
09:00 AM	0	2	0	0	0	0	0	1	0	0	0	0	3
09:15 AM	0	2	0	1	0	0	0	0	0	0	0	0	3
09:30 AM	0	1	0	0	0	1	0	1	0	0	0	0	3
Total	0	5	0	1	0	1	0	2	0	0	0	0	9
12:00 PM	0	1	0	0	0	1	0	0	0	0	0	0	2
12:15 PM	0	0	0	0	0	0	0	1	0	0	0	0	1
12:30 PM	0	1	0	0	0	0	0	1	0	0	0	0	2
12:45 PM	0	0	0	0	0	0	0	3	0	0	0	0	3
Total	0	2	0	0	0	1	0	5	0	0	0	0	8
01:00 PM	0	2	0	0	0	1	0	1	0	0	0	0	4
01:15 PM	0	1	0	0	0	0	0	0	0	0	0	0	1
01:30 PM	0	2	0	0	0	0	0	1	0	0	0	0	3
01:45 PM	0	0	0	0	0	1	0	0	0	0	0	0	1
Total	0	5	0	0	0	2	0	2	0	0	0	0	9
03:15 PM	0	1	0	0	0	0	0	1	0	0	0	0	2
03:45 PM	0	2	0	0	0	0	0	0	1	0	0	0	3
Total	0	3	0	0	0	0	0	1	1	0	0	0	5
04:15 PM	0	1	0	0	0	0	0	0	0	0	0	0	1
04:45 PM	0	1	0	0	0	0	0	0	1	0	0	0	2
Total	0	2	0	0	0	0	0	0	1	0	0	0	3
05:00 PM	0	1	0	0	0	0	0	0	0	0	0	0	1
05:15 PM	0	1	0	0	0	0	0	0	0	0	0	0	1
05:30 PM	0	1	0	0	0	0	0	0	0	0	0	0	1
05:45 PM	0	1	0	0	0	0	0	1	0	0	0	0	2
Total	0	4	0	0	0	0	0	1	0	0	0	0	5
Grand Total	0	35	1	2	0	4	1	14	3	0	0	0	60
Apprch %	0	97.2	2.8	33.3	0	66.7	5.6	77.8	16.7	0	0	0	
Total %	0	58.3	1.7	3.3	0	6.7	1.7	23.3	5	0	0	0	

CITY TRAFFIC COUNTERS

626.991.7522

www.ctcounters.com

File Name : SanFernando_Pierce_3axle
Site Code : 00000000
Start Date : 3/25/2015
Page No : 2

	San Fernando Rd Southbound				Pierce St Westbound				San Fernando Rd Northbound				Pierce St Eastbound				
Start Time	Left	Thru	Right	App. Total	Left	Thru	Right	App. Total	Left	Thru	Right	App. Total	Left	Thru	Right	App. Total	Int. Total
Peak Hour Analysis From 07:00 AM to 09:45 AM - Peak 1 of 1																	
Peak Hour for Entire Intersection Begins at 07:00 AM																	
07:00 AM	0	**5**	0	**5**	0	0	0	0	0	**1**	0	**1**	0	0	0	0	**6**
07:15 AM	0	1	**1**	2	0	0	0	0	0	1	0	1	0	0	0	0	3
07:30 AM	0	2	0	2	**1**	0	0	**1**	0	0	0	0	0	0	0	0	3
07:45 AM	0	1	0	1	0	0	0	0	0	0	0	0	0	0	0	0	1
Total Volume	0	9	1	10	1	0	0	1	0	2	0	2	0	0	0	0	13
% App. Total	0	90	10		100	0	0		0	100	0		0	0	0		
PHF	.000	.450	.250	.500	.250	.000	.000	.250	.000	.500	.000	.500	.000	.000	.000	.000	.542

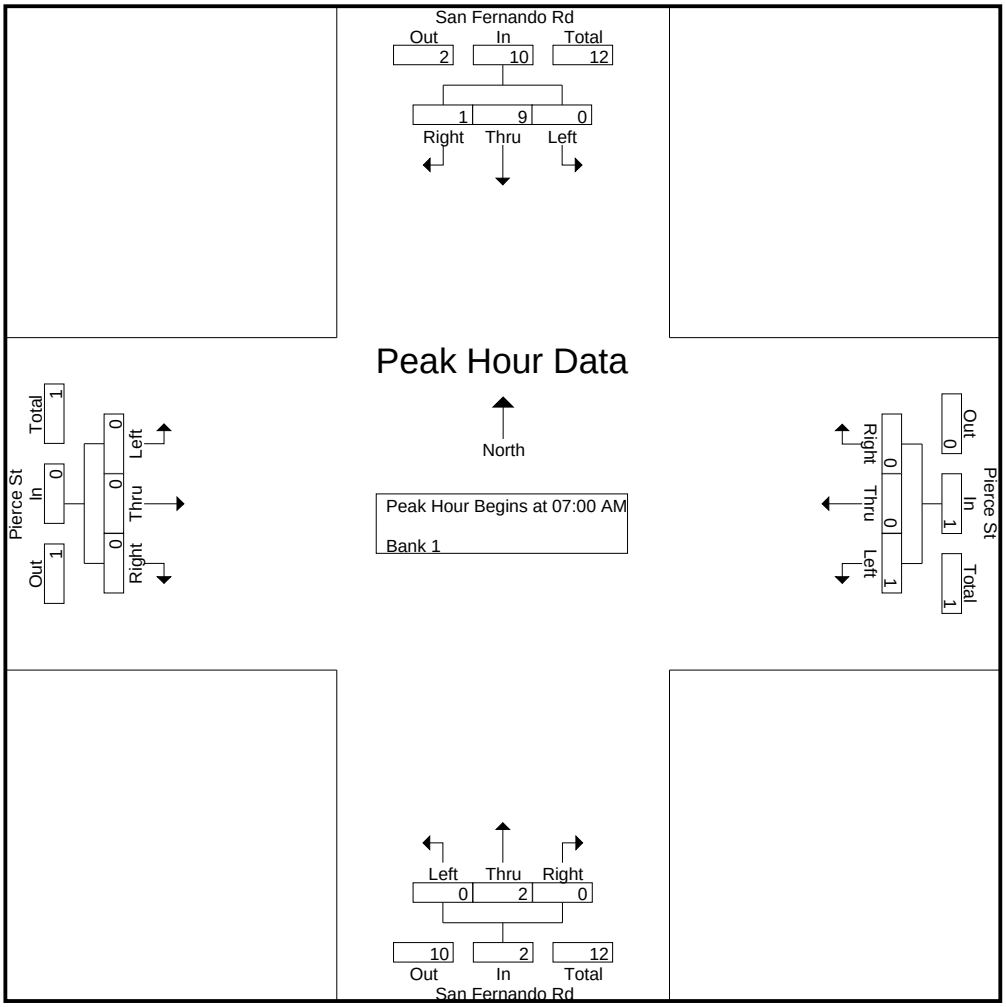

CITY TRAFFIC COUNTERS

626.991.7522

www.ctcounters.com

File Name : SanFernando_Pierce_3axle
Site Code : 00000000
Start Date : 3/25/2015
Page No : 3

	San Fernando Rd Southbound				Pierce St Westbound				San Fernando Rd Northbound				Pierce St Eastbound				
Start Time	Left	Thru	Right	App. Total	Left	Thru	Right	App. Total	Left	Thru	Right	App. Total	Left	Thru	Right	App. Total	Int. Total
Peak Hour Analysis From 10:00 AM to 01:45 PM - Peak 1 of 1																	
Peak Hour for Entire Intersection Begins at 12:45 PM																	
12:45 PM	0	0	0	0	0	0	0	0	0	**3**	0	**3**	0	0	0	0	3
01:00 PM	0	**2**	0	**2**	0	0	**1**	**1**	0	1	0	1	0	0	0	0	**4**
01:15 PM	0	1	0	1	0	0	0	0	0	0	0	0	0	0	0	0	1
01:30 PM	0	2	0	2	0	0	0	0	0	1	0	1	0	0	0	0	3
Total Volume	0	5	0	5	0	0	1	1	0	5	0	5	0	0	0	0	11
% App. Total	0	100	0		0	0	100		0	100	0		0	0	0		
PHF	.000	.625	.000	.625	.000	.000	.250	.250	.000	.417	.000	.417	.000	.000	.000	.000	.688

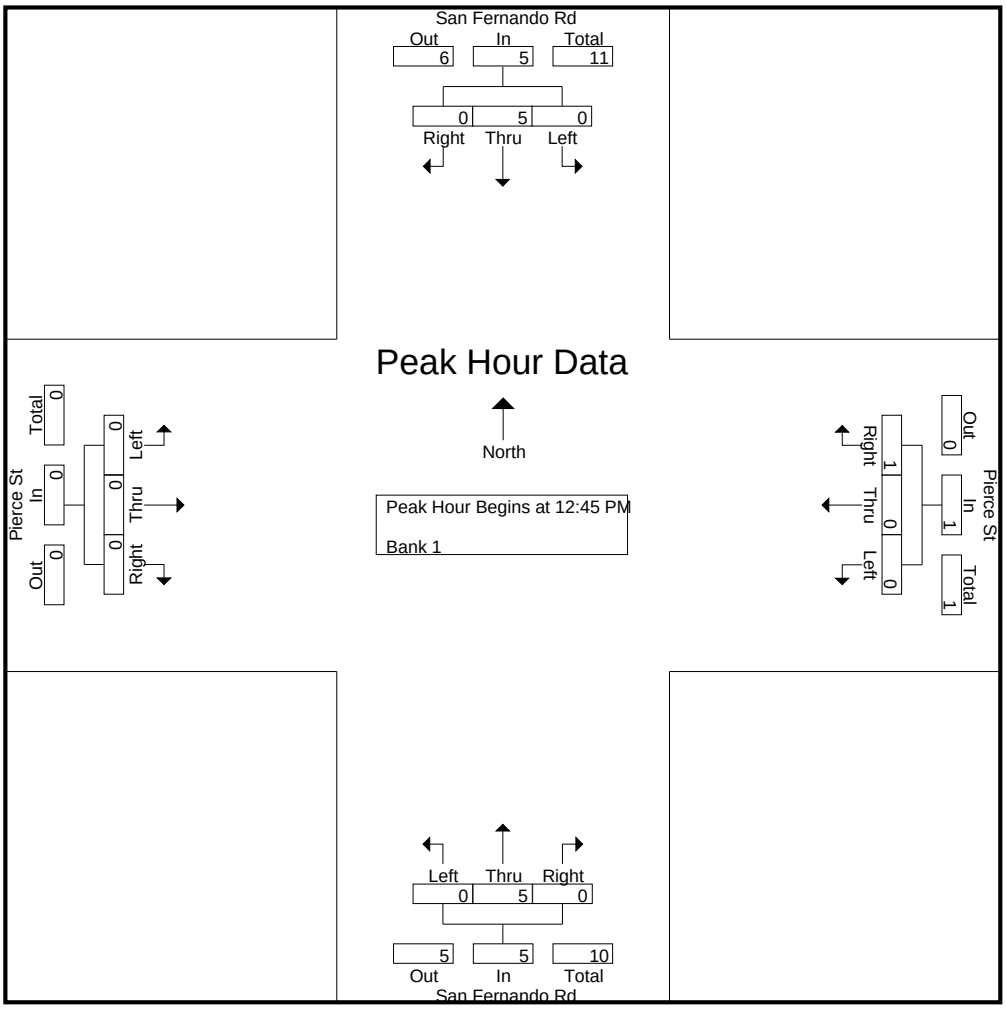

CITY TRAFFIC COUNTERS

626.991.7522

www.ctcounters.com

File Name : SanFernando_Pierce_3axle
Site Code : 00000000
Start Date : 3/25/2015
Page No : 4

	San Fernando Rd Southbound				Pierce St Westbound				San Fernando Rd Northbound				Pierce St Eastbound				
Start Time	Left	Thru	Right	App. Total	Left	Thru	Right	App. Total	Left	Thru	Right	App. Total	Left	Thru	Right	App. Total	Int. Total
Peak Hour Analysis From 02:00 PM to 05:45 PM - Peak 1 of 1																	
Peak Hour for Entire Intersection Begins at 03:00 PM																	
03:00 PM	0	0	0	0	0	0	0	0	0	0	0	0	0	0	0	0	0
03:15 PM	0	1	0	1	0	0	0	0	0	**1**	0	**1**	0	0	0	0	2
03:30 PM	0	0	0	0	0	0	0	0	0	0	0	0	0	0	0	0	0
03:45 PM	0	**2**	0	**2**	0	0	0	0	0	0	**1**	1	0	0	0	0	**3**
Total Volume	0	3	0	3	0	0	0	0	0	1	1	2	0	0	0	0	5
% App. Total	0	100	0		0	0	0		0	50	50		0	0	0		
PHF	.000	.375	.000	.375	.000	.000	.000	.000	.000	.250	.250	.500	.000	.000	.000	.000	.417

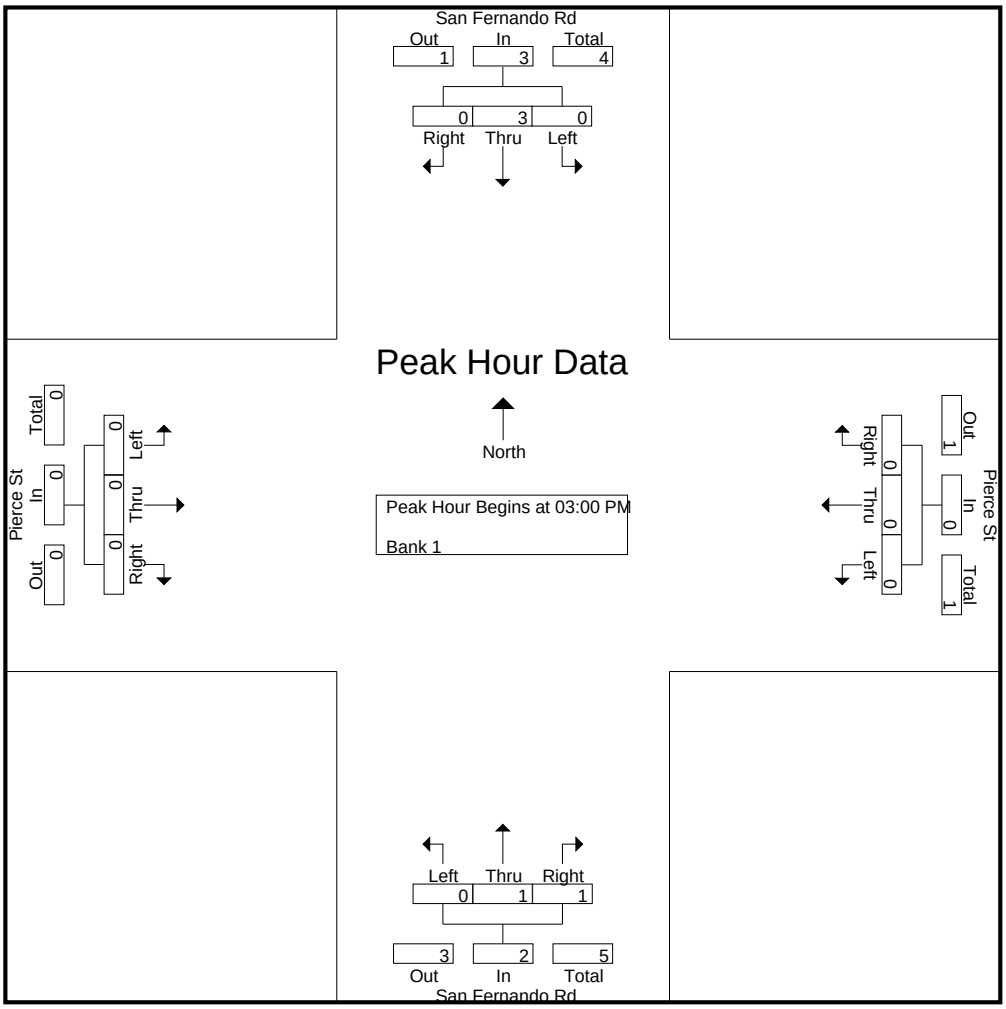

CITY TRAFFIC COUNTERS

626.991.7522

www.ctcounters.com

File Name : SanFernando_Pierce_4axle
Site Code : 00000000
Start Date : 3/25/2015
Page No : 1

Groups Printed- Bank 2

	San Fernando Rd Southbound			Pierce St Westbound			San Fernando Rd Northbound			Pierce St Eastbound			
Start Time	Left	Thru	Right	Left	Thru	Right	Left	Thru	Right	Left	Thru	Right	Int. Total
07:00 AM	0	1	0	0	0	0	0	0	0	0	0	0	1
Total	0	1	0	0	0	0	0	0	0	0	0	0	1
08:00 AM	0	2	0	0	0	0	0	0	0	0	0	0	2
08:15 AM	0	2	0	0	0	0	0	0	0	0	0	0	2
08:30 AM	0	1	0	0	0	0	0	0	0	0	0	0	1
Total	0	5	0	0	0	0	0	0	0	0	0	0	5
09:00 AM	1	0	0	0	0	0	0	0	0	0	0	0	1
09:15 AM	0	1	0	0	0	0	0	0	0	0	0	0	1
09:30 AM	0	0	0	1	0	1	0	1	0	0	0	0	3
Total	1	1	0	1	0	1	0	1	0	0	0	0	5
12:00 PM	1	1	0	0	0	0	0	0	0	0	0	0	2
12:30 PM	0	1	0	0	0	0	0	1	0	0	0	0	2
12:45 PM	0	0	0	0	0	0	0	1	0	0	0	0	1
Total	1	2	0	0	0	0	0	2	0	0	0	0	5
01:15 PM	0	1	0	0	0	0	0	2	0	0	0	0	3
01:30 PM	0	0	0	0	0	0	0	1	0	0	0	0	1
Total	0	1	0	0	0	0	0	3	0	0	0	0	4
03:00 PM	0	1	1	0	0	0	0	0	0	0	0	0	2
03:30 PM	0	0	0	0	0	0	0	1	0	0	0	0	1
03:45 PM	0	1	0	0	0	0	0	1	0	0	0	0	2
Total	0	2	1	0	0	0	0	2	0	0	0	0	5
04:45 PM	0	1	0	0	0	0	0	0	0	0	0	0	1
Total	0	1	0	0	0	0	0	0	0	0	0	0	1
Grand Total	2	13	1	1	0	1	0	8	0	0	0	0	26
Apprch %	12.5	81.2	6.2	50	0	50	0	100	0	0	0	0	
Total %	7.7	50	3.8	3.8	0	3.8	0	30.8	0	0	0	0	

CITY TRAFFIC COUNTERS

626.991.7522

www.ctcounters.com

File Name : SanFernando_Pierce_4axle
Site Code : 00000000
Start Date : 3/25/2015
Page No : 2

	San Fernando Rd Southbound				Pierce St Westbound				San Fernando Rd Northbound				Pierce St Eastbound				
Start Time	Left	Thru	Right	App. Total	Left	Thru	Right	App. Total	Left	Thru	Right	App. Total	Left	Thru	Right	App. Total	Int. Total
Peak Hour Analysis From 07:00 AM to 09:45 AM - Peak 1 of 1																	
Peak Hour for Entire Intersection Begins at 07:45 AM																	
07:45 AM	0	0	0	0	0	0	0	0	0	0	0	0	0	0	0	0	0
08:00 AM	0	**2**	0	**2**	0	0	0	0	0	0	0	0	0	0	0	0	**2**
08:15 AM	0	2	0	2	0	0	0	0	0	0	0	0	0	0	0	0	2
08:30 AM	0	1	0	1	0	0	0	0	0	0	0	0	0	0	0	0	1
Total Volume	0	5	0	5	0	0	0	0	0	0	0	0	0	0	0	0	5
% App. Total	0	100	0		0	0	0		0	0	0		0	0	0		
PHF	.000	.625	.000	.625	.000	.000	.000	.000	.000	.000	.000	.000	.000	.000	.000	.000	.625

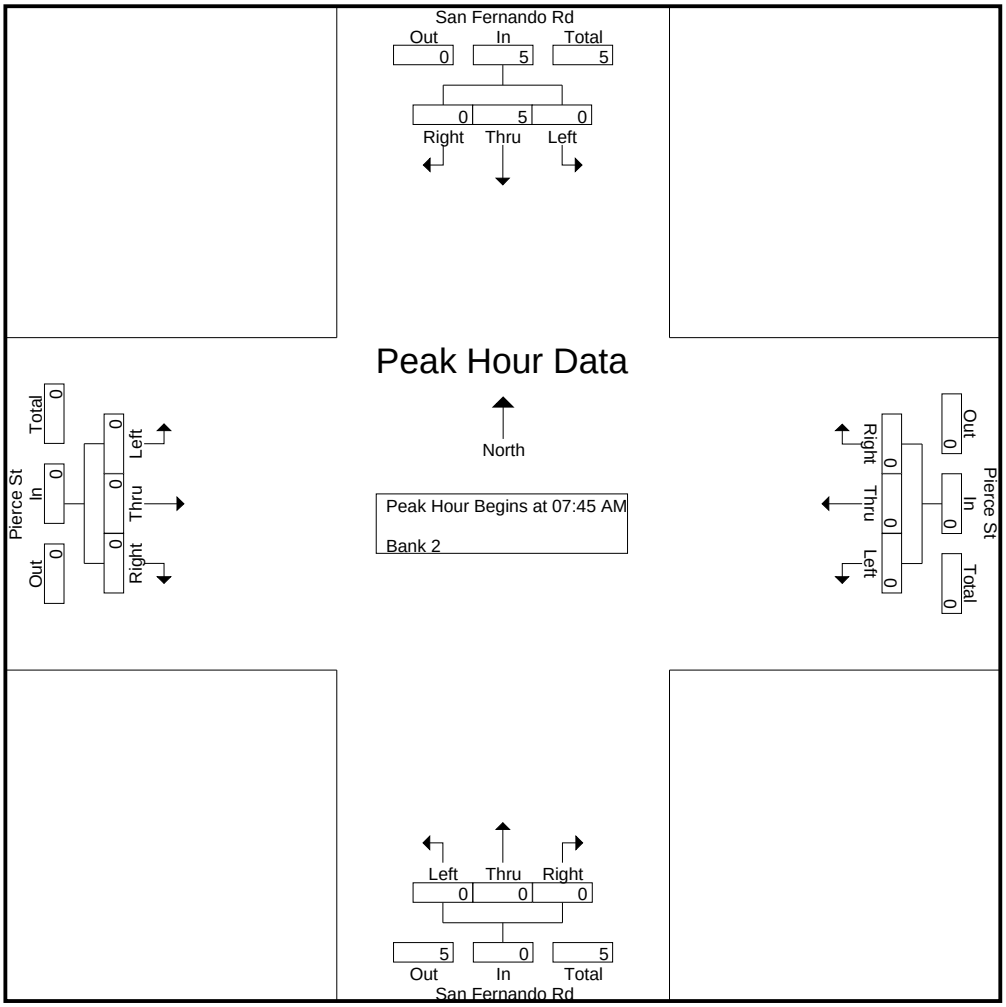

CITY TRAFFIC COUNTERS

626.991.7522

www.ctcounters.com

File Name : SanFernando_Pierce_4axle
Site Code : 00000000
Start Date : 3/25/2015
Page No : 3

	San Fernando Rd Southbound				Pierce St Westbound				San Fernando Rd Northbound				Pierce St Eastbound				
Start Time	Left	Thru	Right	App. Total	Left	Thru	Right	App. Total	Left	Thru	Right	App. Total	Left	Thru	Right	App. Total	Int. Total
Peak Hour Analysis From 10:00 AM to 01:45 PM - Peak 1 of 1																	
Peak Hour for Entire Intersection Begins at 12:30 PM																	
12:30 PM	0	**1**	0	**1**	0	0	0	0	0	1	0	1	0	0	0	0	2
12:45 PM	0	0	0	0	0	0	0	0	0	1	0	1	0	0	0	0	1
01:00 PM	0	0	0	0	0	0	0	0	0	0	0	0	0	0	0	0	0
01:15 PM	0	1	0	1	0	0	0	0	0	**2**	0	**2**	0	0	0	0	**3**
Total Volume	0	2	0	2	0	0	0	0	0	4	0	4	0	0	0	0	6
% App. Total	0	100	0		0	0	0		0	100	0		0	0	0		
PHF	.000	.500	.000	.500	.000	.000	.000	.000	.000	.500	.000	.500	.000	.000	.000	.000	.500

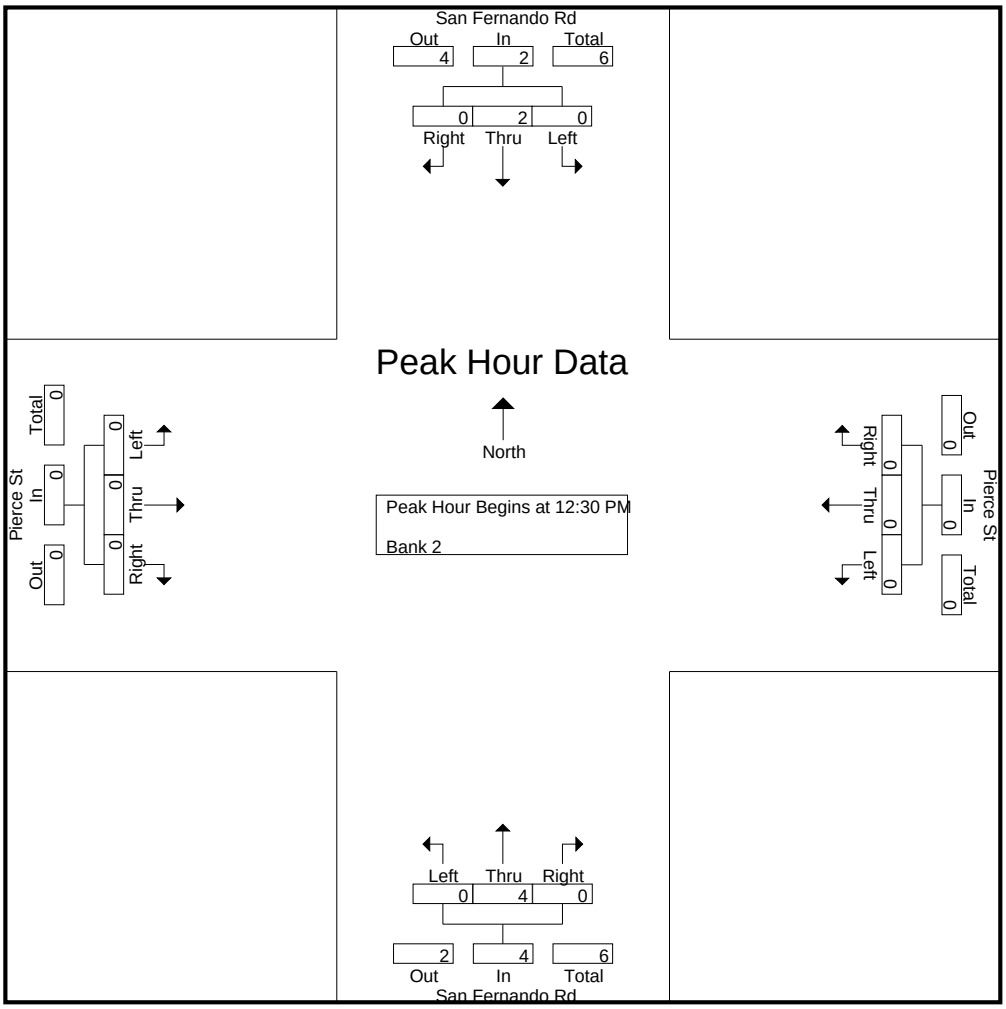

CITY TRAFFIC COUNTERS

626.991.7522

www.ctcounters.com

File Name : SanFernando_Pierce_4axle
Site Code : 00000000
Start Date : 3/25/2015
Page No : 4

	San Fernando Rd Southbound				Pierce St Westbound				San Fernando Rd Northbound				Pierce St Eastbound				
Start Time	Left	Thru	Right	App. Total	Left	Thru	Right	App. Total	Left	Thru	Right	App. Total	Left	Thru	Right	App. Total	Int. Total
Peak Hour Analysis From 02:00 PM to 05:45 PM - Peak 1 of 1																	
Peak Hour for Entire Intersection Begins at 03:00 PM																	
03:00 PM	0	**1**	**1**	**2**	0	0	0	0	0	0	0	0	0	0	0	0	**2**
03:15 PM	0	0	0	0	0	0	0	0	0	0	0	0	0	0	0	0	0
03:30 PM	0	0	0	0	0	0	0	0	0	**1**	0	**1**	0	0	0	0	1
03:45 PM	0	1	0	1	0	0	0	0	0	1	0	1	0	0	0	0	2
Total Volume	0	2	1	3	0	0	0	0	0	2	0	2	0	0	0	0	5
% App. Total	0	66.7	33.3		0	0	0		0	100	0		0	0	0		
PHF	.000	.500	.250	.375	.000	.000	.000	.000	.000	.500	.000	.500	.000	.000	.000	.000	.625

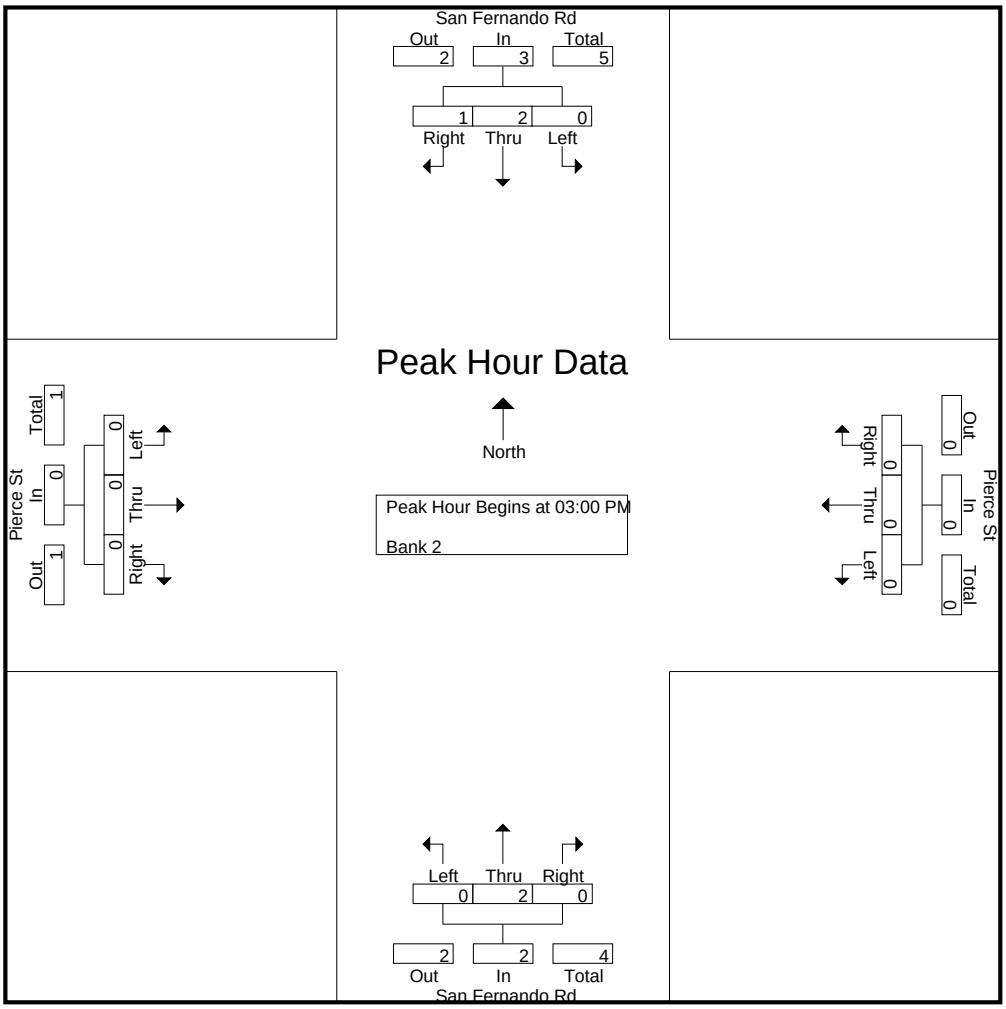

CITY TRAFFIC COUNTERS

626.991.7522

www.ctcounters.com

File Name : SanFernando_Pierce_5axle
Site Code : 00000000
Start Date : 3/25/2015
Page No : 1

Groups Printed- Unshifted

	San Fernando Rd Southbound			Pierce St Westbound			San Fernando Rd Northbound			Pierce St Eastbound			
Start Time	Left	Thru	Right	Left	Thru	Right	Left	Thru	Right	Left	Thru	Right	Int. Total
07:00 AM	0	2	0	0	0	0	0	1	0	0	0	0	3
07:15 AM	0	3	0	0	0	0	0	0	0	0	0	0	3
07:30 AM	0	2	1	0	0	0	0	0	0	0	0	0	3
07:45 AM	0	2	0	0	0	0	0	0	0	0	0	0	2
Total	0	9	1	0	0	0	0	1	0	0	0	0	11
08:00 AM	0	3	0	0	0	0	0	0	0	0	0	0	3
08:15 AM	0	2	0	0	0	0	0	1	0	0	0	0	3
08:30 AM	0	1	0	0	0	0	0	1	0	0	0	0	2
08:45 AM	0	0	0	0	0	1	0	1	1	0	0	0	3
Total	0	6	0	0	0	1	0	3	1	0	0	0	11
09:00 AM	1	1	0	0	0	0	0	2	0	0	0	0	4
09:15 AM	0	3	0	0	0	0	0	0	0	0	0	0	3
09:30 AM	1	1	0	0	0	0	0	0	0	0	0	0	2
09:45 AM	0	3	0	0	0	0	0	3	0	0	0	0	6
Total	2	8	0	0	0	0	0	5	0	0	0	0	15
12:00 PM	0	0	0	0	0	0	0	2	1	0	0	0	3
12:15 PM	1	0	0	0	0	0	0	0	0	0	0	0	1
12:30 PM	2	0	0	0	0	0	0	0	0	0	0	0	2
12:45 PM	0	0	0	0	0	1	0	0	0	0	0	0	1
Total	3	0	0	0	0	1	0	2	1	0	0	0	7
01:00 PM	0	1	0	1	0	0	0	0	0	0	0	0	2
01:15 PM	0	1	0	0	0	0	0	0	0	0	0	0	1
01:30 PM	0	1	0	0	0	0	0	1	0	0	0	0	2
01:45 PM	0	1	0	0	0	0	0	1	0	0	0	0	2
Total	0	4	0	1	0	0	0	2	0	0	0	0	7
03:00 PM	0	2	0	0	0	1	0	0	0	0	0	0	3
03:15 PM	0	0	0	0	0	0	0	1	0	0	0	0	1
03:30 PM	0	0	0	0	0	0	0	2	0	0	0	0	2
03:45 PM	2	0	0	0	0	0	0	1	0	0	0	0	3
Total	2	2	0	0	0	1	0	4	0	0	0	0	9
04:00 PM	0	1	0	0	0	0	0	1	0	0	0	0	2
04:45 PM	0	0	0	0	0	0	0	1	0	0	0	0	1
Total	0	1	0	0	0	0	0	2	0	0	0	0	3
05:15 PM	0	1	0	0	0	0	0	0	0	0	0	0	1
Total	0	1	0	0	0	0	0	0	0	0	0	0	1
Grand Total	7	31	1	1	0	3	0	19	2	0	0	0	64
Apprch %	17.9	79.5	2.6	25	0	75	0	90.5	9.5	0	0	0	
Total %	10.9	48.4	1.6	1.6	0	4.7	0	29.7	3.1	0	0	0	

CITY TRAFFIC COUNTERS

626.991.7522

www.ctcounters.com

File Name : SanFernando_Pierce_5axle
Site Code : 00000000
Start Date : 3/25/2015
Page No : 2

	San Fernando Rd Southbound				Pierce St Westbound				San Fernando Rd Northbound				Pierce St Eastbound				
Start Time	Left	Thru	Right	App. Total	Left	Thru	Right	App. Total	Left	Thru	Right	App. Total	Left	Thru	Right	App. Total	Int. Total
Peak Hour Analysis From 07:00 AM to 09:45 AM - Peak 1 of 1																	
Peak Hour for Entire Intersection Begins at 09:00 AM																	
09:00 AM	**1**	1	0	2	0	0	0	0	0	2	0	2	0	0	0	0	4
09:15 AM	0	**3**	0	**3**	0	0	0	0	0	0	0	0	0	0	0	0	3
09:30 AM	1	1	0	2	0	0	0	0	0	0	0	0	0	0	0	0	2
09:45 AM	0	3	0	3	0	0	0	0	0	**3**	0	**3**	0	0	0	0	**6**
Total Volume	2	8	0	10	0	0	0	0	0	5	0	5	0	0	0	0	15
% App. Total	20	80	0		0	0	0		0	100	0		0	0	0		
PHF	.500	.667	.000	.833	.000	.000	.000	.000	.000	.417	.000	.417	.000	.000	.000	.000	.625

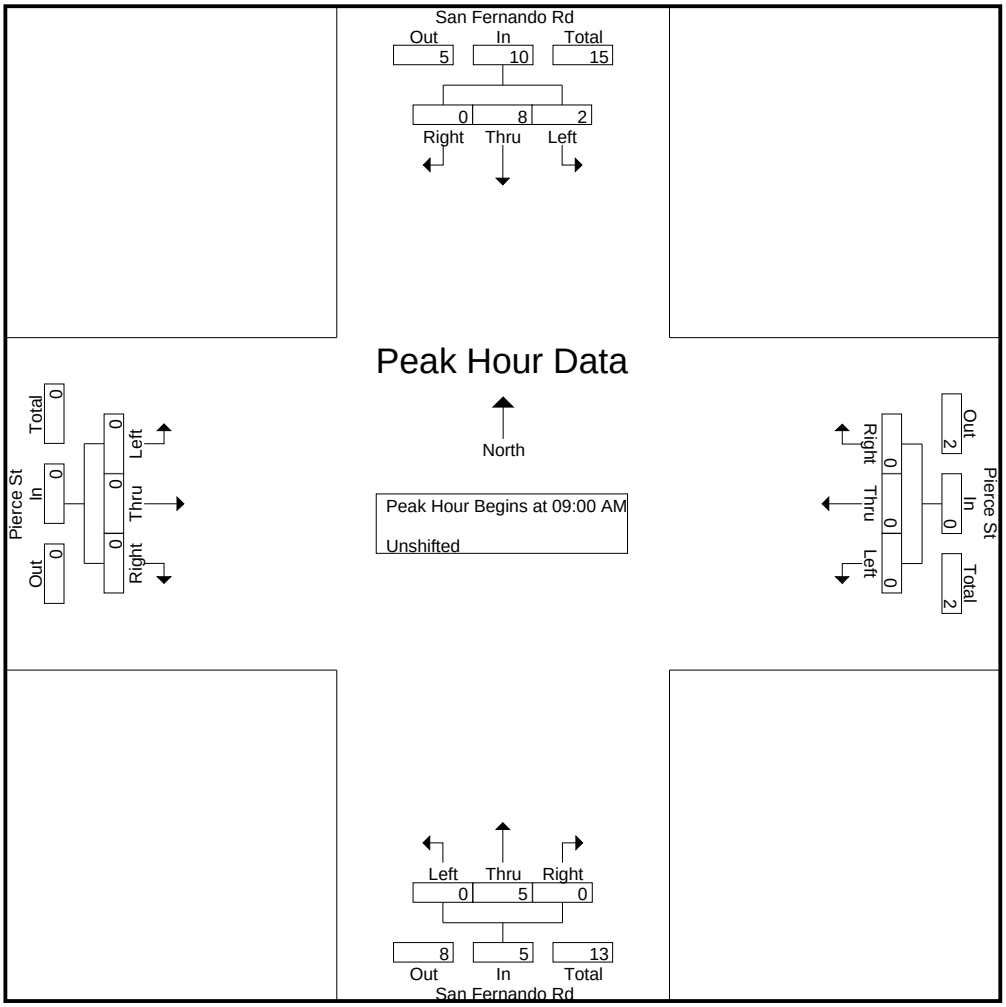

CITY TRAFFIC COUNTERS

626.991.7522

www.ctcounters.com

File Name : SanFernando_Pierce_5axle
Site Code : 00000000
Start Date : 3/25/2015
Page No : 3

	San Fernando Rd Southbound				Pierce St Westbound				San Fernando Rd Northbound				Pierce St Eastbound				
Start Time	Left	Thru	Right	App. Total	Left	Thru	Right	App. Total	Left	Thru	Right	App. Total	Left	Thru	Right	App. Total	Int. Total
Peak Hour Analysis From 10:00 AM to 01:45 PM - Peak 1 of 1																	
Peak Hour for Entire Intersection Begins at 12:00 PM																	
12:00 PM	0	0	0	0	0	0	0	0	0	**2**	**1**	**3**	0	0	0	0	**3**
12:15 PM	1	0	0	1	0	0	0	0	0	0	0	0	0	0	0	0	1
12:30 PM	**2**	0	0	**2**	0	0	0	0	0	0	0	0	0	0	0	0	2
12:45 PM	0	0	0	0	0	0	**1**	**1**	0	0	0	0	0	0	0	0	1
Total Volume	3	0	0	3	0	0	1	1	0	2	1	3	0	0	0	0	7
% App. Total	100	0	0		0	0	100		0	66.7	33.3		0	0	0		
PHF	.375	.000	.000	.375	.000	.000	.250	.250	.000	.250	.250	.250	.000	.000	.000	.000	.583

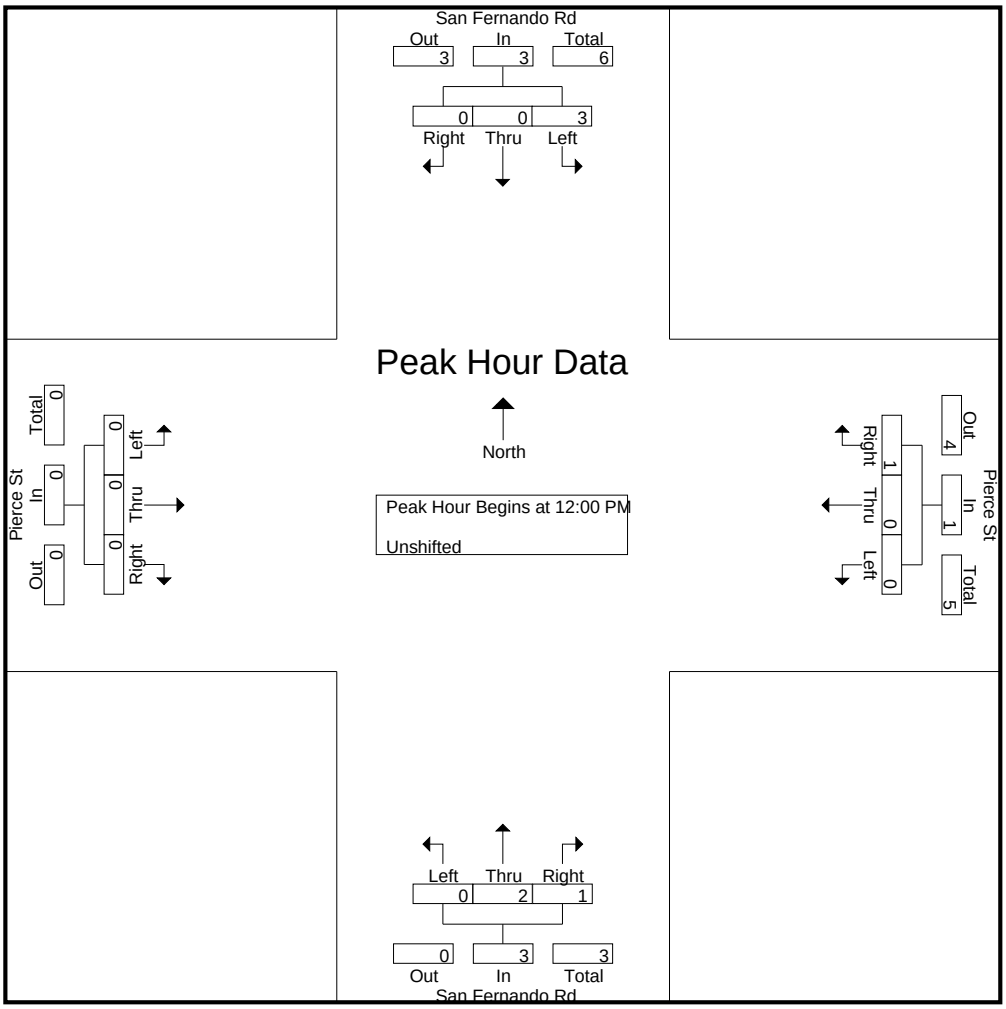

CITY TRAFFIC COUNTERS

626.991.7522

www.ctcounters.com

File Name : SanFernando_Pierce_5axle
Site Code : 00000000
Start Date : 3/25/2015
Page No : 4

	San Fernando Rd Southbound				Pierce St Westbound				San Fernando Rd Northbound				Pierce St Eastbound				
Start Time	Left	Thru	Right	App. Total	Left	Thru	Right	App. Total	Left	Thru	Right	App. Total	Left	Thru	Right	App. Total	Int. Total
Peak Hour Analysis From 02:00 PM to 05:45 PM - Peak 1 of 1																	
Peak Hour for Entire Intersection Begins at 03:00 PM																	
03:00 PM	0	**2**	0	**2**	0	0	**1**	**1**	0	0	0	0	0	0	0	0	**3**
03:15 PM	0	0	0	0	0	0	0	0	0	1	0	1	0	0	0	0	1
03:30 PM	0	0	0	0	0	0	0	0	0	**2**	0	**2**	0	0	0	0	2
03:45 PM	**2**	0	0	2	0	0	0	0	0	1	0	1	0	0	0	0	3
Total Volume	2	2	0	4	0	0	1	1	0	4	0	4	0	0	0	0	9
% App. Total	50	50	0		0	0	100		0	100	0		0	0	0		
PHF	.250	.250	.000	.500	.000	.000	.250	.250	.000	.500	.000	.500	.000	.000	.000	.000	.750

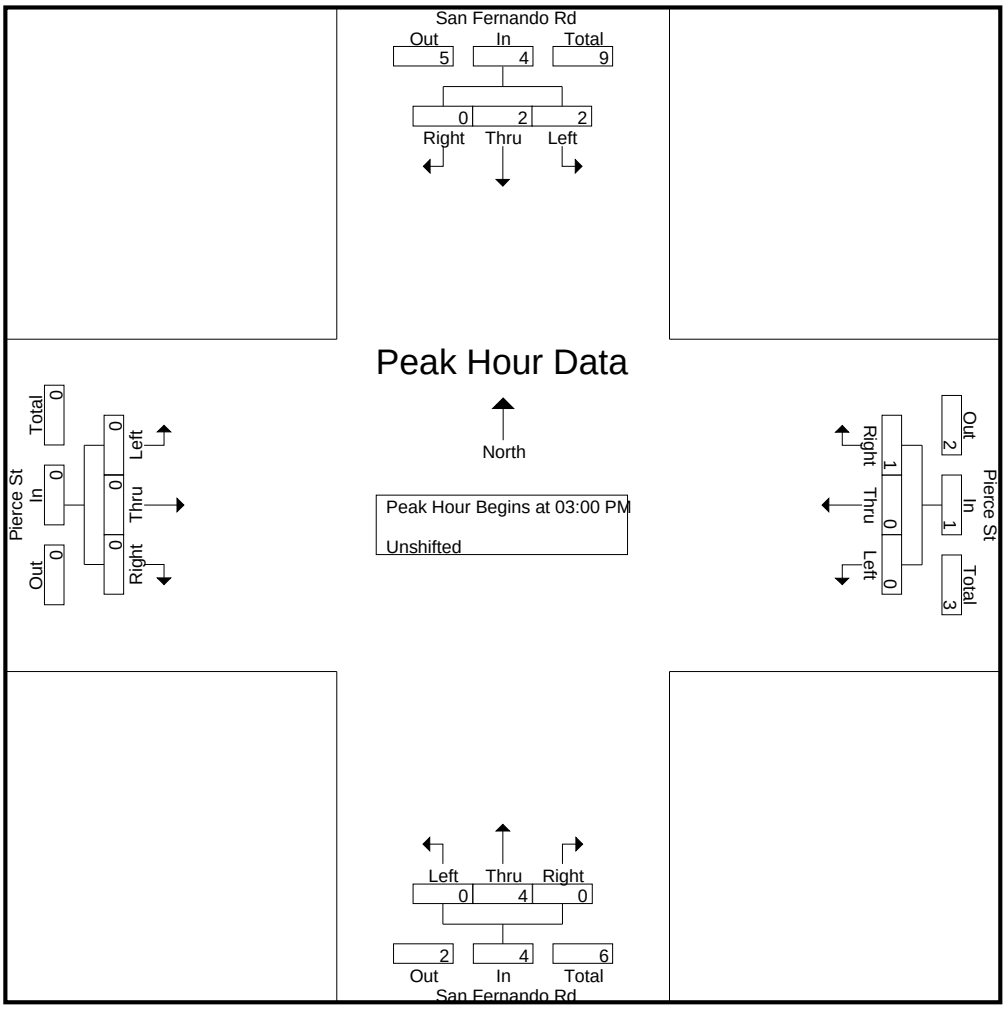

CITY TRAFFIC COUNTERS

626.991.7522

www.ctcounters.com

File Name : SanFernando_TerraBella
Site Code : 00000000
Start Date : 3/25/2015
Page No : 1

Groups Printed- Unshifted

	San Fernando Rd Southbound			Terra Bella St Westbound			San Fernando Rd Northbound			Terra Bella St Eastbound			
Start Time	Left	Thru	Right	Left	Thru	Right	Left	Thru	Right	Left	Thru	Right	Int. Total
07:00 AM	0	209	39	0	0	0	10	77	0	37	0	13	385
07:15 AM	0	309	54	0	0	0	11	85	0	59	0	23	541
07:30 AM	0	307	67	0	0	0	12	111	0	67	0	26	590
07:45 AM	0	279	42	0	0	0	14	115	0	62	0	29	541
Total	0	1104	202	0	0	0	47	388	0	225	0	91	2057
08:00 AM	0	212	41	0	0	0	11	88	0	41	0	25	418
08:15 AM	0	217	30	0	0	0	11	70	0	21	0	22	371
08:30 AM	0	182	24	0	0	0	6	74	0	41	0	15	342
08:45 AM	0	126	18	0	0	0	8	51	0	20	0	16	239
Total	0	737	113	0	0	0	36	283	0	123	0	78	1370
09:00 AM	0	105	27	0	0	0	8	62	0	25	0	15	242
09:15 AM	0	113	21	0	0	0	7	73	0	15	0	17	246
09:30 AM	0	102	27	0	0	0	7	80	0	28	0	15	259
09:45 AM	0	103	29	0	0	0	10	74	0	23	0	11	250
Total	0	423	104	0	0	0	32	289	0	91	0	58	997
12:00 PM	0	101	25	0	0	0	11	117	0	28	0	8	290
12:15 PM	0	106	29	0	0	0	6	84	0	34	0	18	277
12:30 PM	0	120	24	0	0	0	8	93	0	19	0	9	273
12:45 PM	0	125	24	0	0	0	17	108	0	22	0	17	313
Total	0	452	102	0	0	0	42	402	0	103	0	52	1153
01:00 PM	0	134	38	0	0	0	9	93	0	27	0	12	313
01:15 PM	0	94	21	0	0	0	10	99	0	33	0	19	276
01:30 PM	0	102	25	0	0	0	19	102	0	29	0	13	290
01:45 PM	0	112	27	0	0	0	9	109	0	33	0	12	302
Total	0	442	111	0	0	0	47	403	0	122	0	56	1181
03:00 PM	0	126	44	0	0	0	17	89	0	35	0	18	329
03:15 PM	0	140	31	0	0	0	9	140	0	47	0	17	384
03:30 PM	0	150	35	0	0	0	19	136	0	35	0	24	399
03:45 PM	0	144	33	0	0	0	25	151	0	39	0	14	406
Total	0	560	143	0	0	0	70	516	0	156	0	73	1518
04:00 PM	0	160	41	0	0	0	17	166	0	41	0	15	440
04:15 PM	0	155	45	0	0	0	18	140	0	44	0	18	420
04:30 PM	0	134	41	0	0	0	29	170	0	43	0	17	434
04:45 PM	0	161	42	0	0	0	27	181	0	52	0	28	491
Total	0	610	169	0	0	0	91	657	0	180	0	78	1785
05:00 PM	0	153	44	0	0	0	31	178	0	47	0	33	486
05:15 PM	0	150	45	0	0	0	18	186	0	47	0	21	467
05:30 PM	0	131	45	0	0	0	31	165	0	54	0	21	447
05:45 PM	0	147	43	0	0	0	25	178	0	45	0	17	455
Total	0	581	177	0	0	0	105	707	0	193	0	92	1855
Grand Total	0	4909	1121	0	0	0	470	3645	0	1193	0	578	11916
Apprch %	0	81.4	18.6	0	0	0	11.4	88.6	0	67.4	0	32.6	
Total %	0	41.2	9.4	0	0	0	3.9	30.6	0	10	0	4.9	

CITY TRAFFIC COUNTERS

626.991.7522

www.ctcounters.com

File Name : SanFernando_TerraBella
Site Code : 00000000
Start Date : 3/25/2015
Page No : 2

	San Fernando Rd Southbound				Terra Bella St Westbound				San Fernando Rd Northbound				Terra Bella St Eastbound				
Start Time	Left	Thru	Right	App. Total	Left	Thru	Right	App. Total	Left	Thru	Right	App. Total	Left	Thru	Right	App. Total	Int. Total
Peak Hour Analysis From 07:00 AM to 09:45 AM - Peak 1 of 1																	
Peak Hour for Entire Intersection Begins at 07:15 AM																	
07:15 AM	0	**309**	54	363	0	0	0	0	11	85	0	96	59	0	23	82	541
07:30 AM	0	307	**67**	**374**	0	0	0	0	12	111	0	123	**67**	0	26	**93**	**590**
07:45 AM	0	279	42	321	0	0	0	0	**14**	**115**	0	**129**	62	0	**29**	91	541
08:00 AM	0	212	41	253	0	0	0	0	11	88	0	99	41	0	25	66	418
Total Volume	0	1107	204	1311	0	0	0	0	48	399	0	447	229	0	103	332	2090
% App. Total	0	84.4	15.6		0	0	0		10.7	89.3	0		69	0	31		
PHF	.000	.896	.761	.876	.000	.000	.000	.000	.857	.867	.000	.866	.854	.000	.888	.892	.886

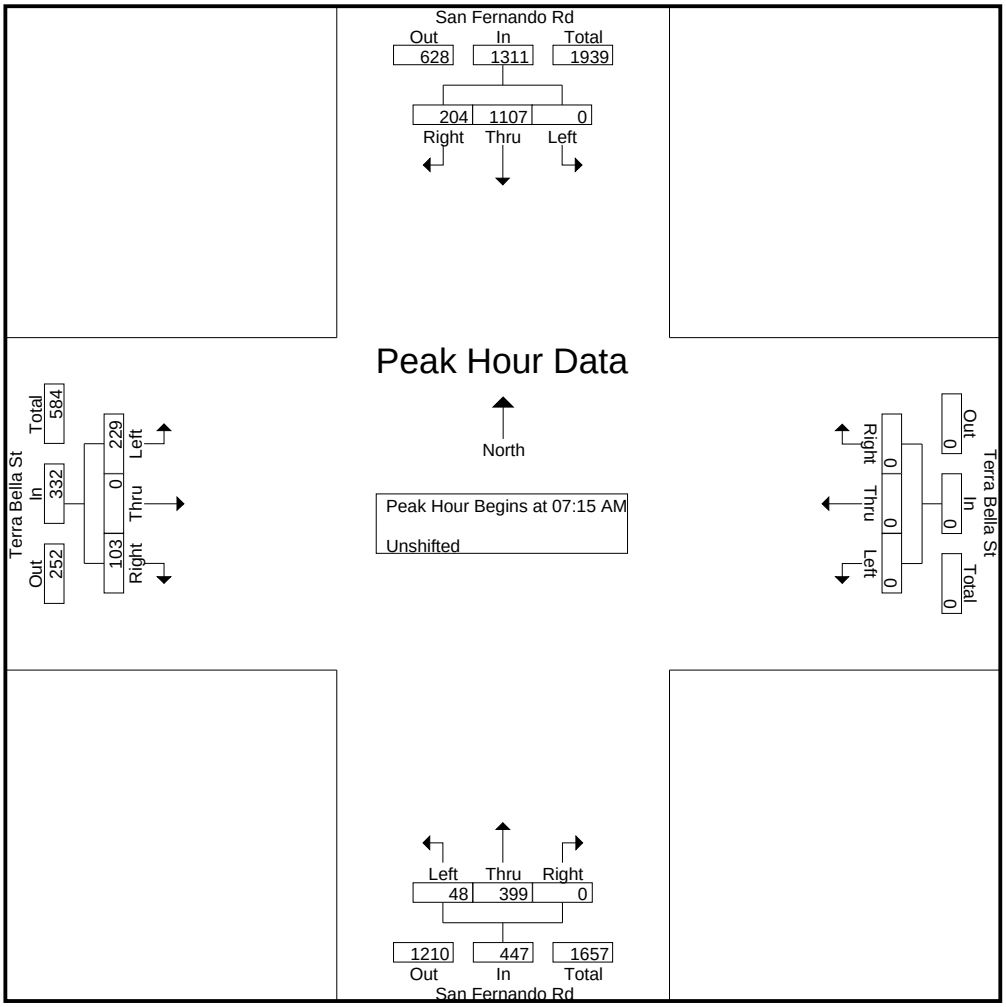

CITY TRAFFIC COUNTERS

626.991.7522

www.ctcounters.com

File Name : SanFernando_TerraBella
Site Code : 00000000
Start Date : 3/25/2015
Page No : 3

	San Fernando Rd Southbound				Terra Bella St Westbound				San Fernando Rd Northbound				Terra Bella St Eastbound				
Start Time	Left	Thru	Right	App. Total	Left	Thru	Right	App. Total	Left	Thru	Right	App. Total	Left	Thru	Right	App. Total	Int. Total
Peak Hour Analysis From 10:00 AM to 01:45 PM - Peak 1 of 1																	
Peak Hour for Entire Intersection Begins at 12:45 PM																	
12:45 PM	0	125	24	149	0	0	0	0	17	**108**	0	**125**	22	0	17	39	**313**
01:00 PM	0	**134**	**38**	**172**	0	0	0	0	9	93	0	102	27	0	12	39	313
01:15 PM	0	94	21	115	0	0	0	0	10	99	0	109	**33**	0	**19**	**52**	276
01:30 PM	0	102	25	127	0	0	0	0	**19**	102	0	121	29	0	13	42	290
Total Volume	0	455	108	563	0	0	0	0	55	402	0	457	111	0	61	172	1192
% App. Total	0	80.8	19.2		0	0	0		12	88	0		64.5	0	35.5		
PHF	.000	.849	.711	.818	.000	.000	.000	.000	.724	.931	.000	.914	.841	.000	.803	.827	.952

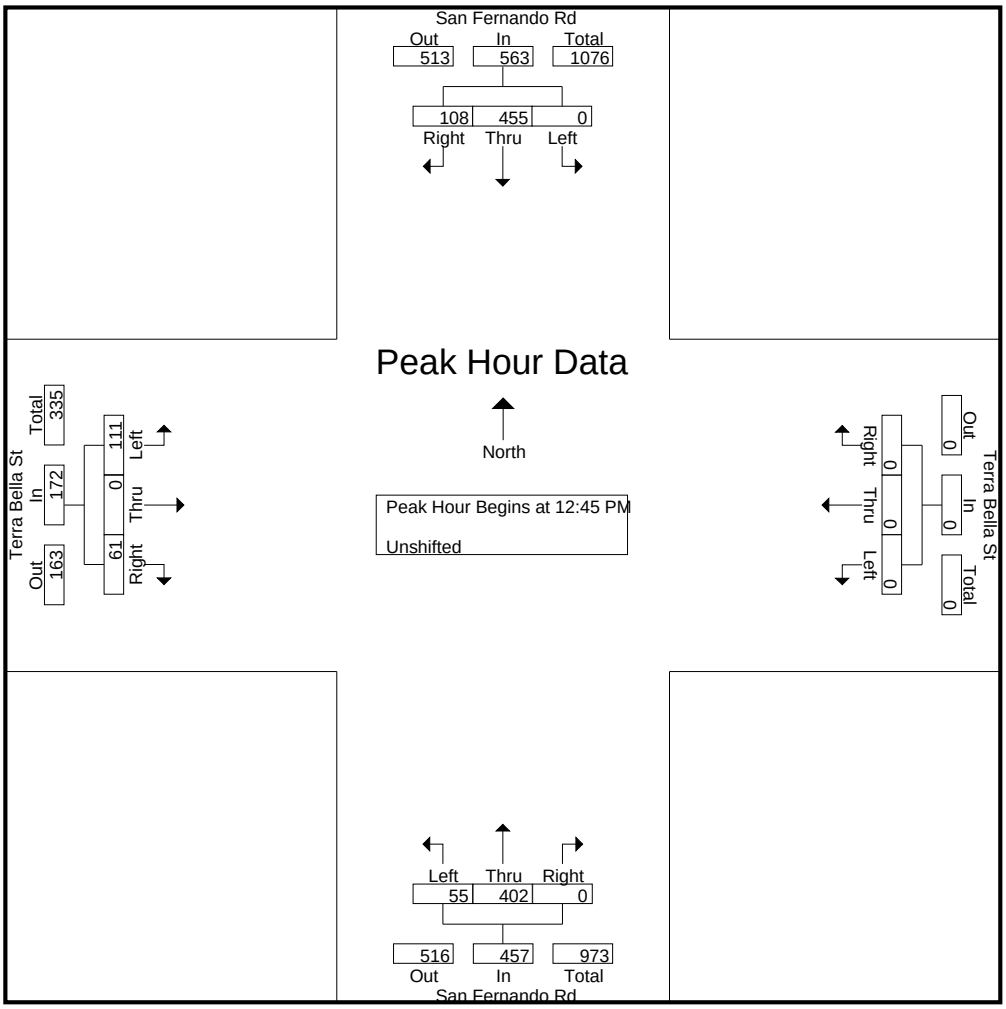

CITY TRAFFIC COUNTERS

626.991.7522

www.ctcounters.com

File Name : SanFernando_TerraBella
Site Code : 00000000
Start Date : 3/25/2015
Page No : 4

	San Fernando Rd Southbound				Terra Bella St Westbound				San Fernando Rd Northbound				Terra Bella St Eastbound				
Start Time	Left	Thru	Right	App. Total	Left	Thru	Right	App. Total	Left	Thru	Right	App. Total	Left	Thru	Right	App. Total	Int. Total
Peak Hour Analysis From 02:00 PM to 05:45 PM - Peak 1 of 1																	
Peak Hour for Entire Intersection Begins at 04:45 PM																	
04:45 PM	0	**161**	42	**203**	0	0	0	0	27	181	0	208	52	0	28	**80**	**491**
05:00 PM	0	153	44	197	0	0	0	0	**31**	178	0	**209**	47	0	**33**	80	486
05:15 PM	0	150	**45**	195	0	0	0	0	18	**186**	0	204	47	0	21	68	467
05:30 PM	0	131	45	176	0	0	0	0	31	165	0	196	**54**	0	21	75	447
Total Volume	0	595	176	771	0	0	0	0	107	710	0	817	200	0	103	303	1891
% App. Total	0	77.2	22.8		0	0	0		13.1	86.9	0		66	0	34		
PHF	.000	.924	.978	.950	.000	.000	.000	.000	.863	.954	.000	.977	.926	.000	.780	.947	.963

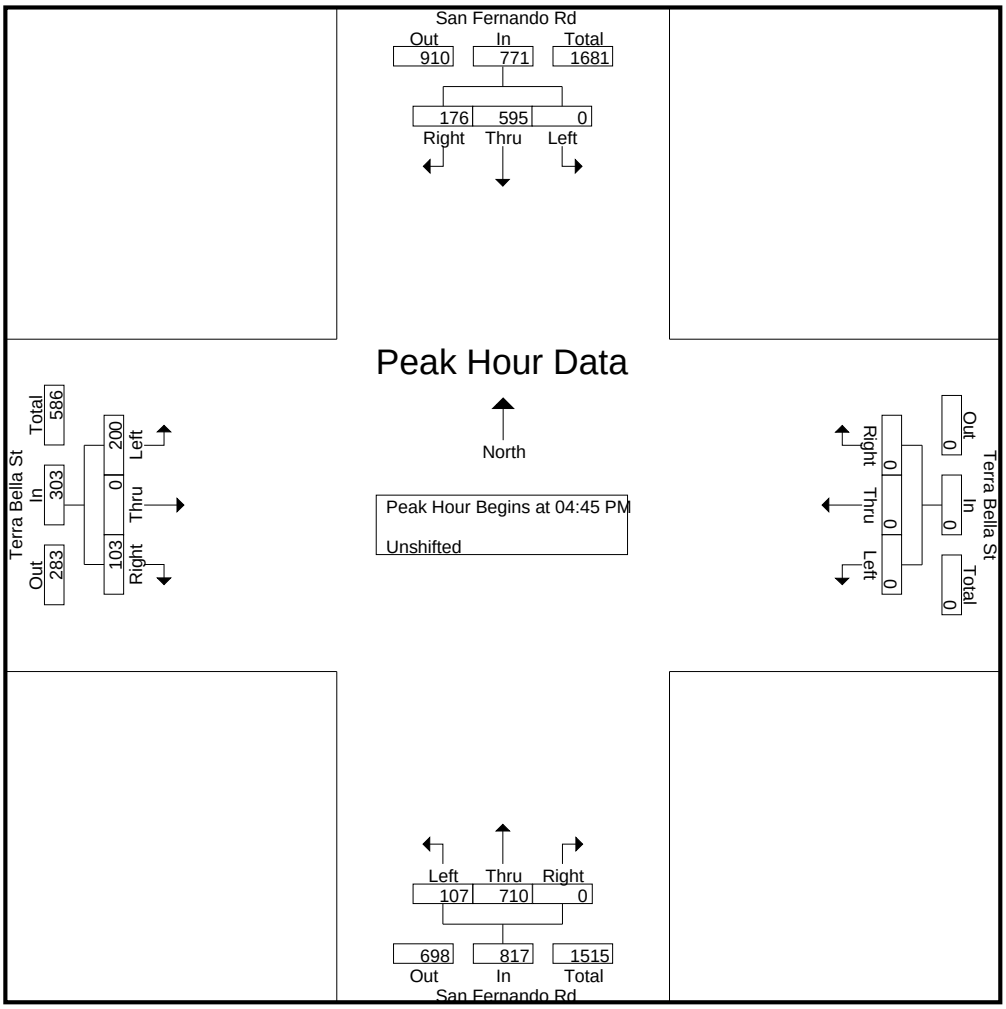

CITY TRAFFIC COUNTERS

626.991.7522

www.ctcounters.com

File Name : SanFernando_TerraBella_Motorcycles
Site Code : 00000000
Start Date : 3/25/2015
Page No : 1

Groups Printed- Bank 2

	San Fernando Rd Southbound			Terra Bella St Westbound			San Fernando Rd Northbound			Terra Bella St Eastbound			
Start Time	Left	Thru	Right	Left	Thru	Right	Left	Thru	Right	Left	Thru	Right	Int. Total
07:00 AM	0	0	0	0	0	0	0	1	0	0	0	0	1
07:30 AM	0	0	0	0	0	0	0	1	0	0	0	0	1
07:45 AM	0	1	0	0	0	0	0	0	0	0	0	1	2
Total	0	1	0	0	0	0	0	2	0	0	0	1	4
08:30 AM	0	1	0	0	0	0	0	0	0	0	0	0	1
Total	0	1	0	0	0	0	0	0	0	0	0	0	1
09:15 AM	0	1	0	0	0	0	0	0	0	0	0	0	1
Total	0	1	0	0	0	0	0	0	0	0	0	0	1
12:15 PM	0	0	0	0	0	0	0	1	0	1	0	1	3
12:30 PM	0	0	0	0	0	0	1	0	0	0	0	0	1
12:45 PM	0	1	0	0	0	0	0	1	0	0	0	0	2
Total	0	1	0	0	0	0	1	2	0	1	0	1	6
01:15 PM	0	1	0	0	0	0	0	0	0	0	0	0	1
01:45 PM	0	0	0	0	0	0	0	0	0	0	0	1	1
Total	0	1	0	0	0	0	0	0	0	0	0	1	2
03:00 PM	0	1	0	0	0	0	0	1	0	0	0	0	2
03:15 PM	0	0	0	0	0	0	0	1	0	0	0	0	1
03:30 PM	0	0	0	0	0	0	0	1	0	0	0	0	1
03:45 PM	0	1	0	0	0	0	0	0	0	0	0	0	1
Total	0	2	0	0	0	0	0	3	0	0	0	0	5
04:00 PM	0	2	0	0	0	0	0	0	0	0	0	0	2
04:30 PM	0	2	0	0	0	0	0	0	0	0	0	0	2
04:45 PM	0	3	0	0	0	0	0	0	1	0	0	0	4
Total	0	7	0	0	0	0	0	0	1	0	0	0	8
05:00 PM	0	0	0	0	0	0	0	1	0	0	0	0	1
05:15 PM	0	1	0	0	0	0	0	1	0	0	0	0	2
Total	0	1	0	0	0	0	0	2	0	0	0	0	3
Grand Total	0	15	0	0	0	0	1	9	1	1	0	3	30
Apprch %	0	100	0	0	0	0	9.1	81.8	9.1	25	0	75	
Total %	0	50	0	0	0	0	3.3	30	3.3	3.3	0	10	

CITY TRAFFIC COUNTERS

626.991.7522

www.ctcounters.com

File Name : SanFernando_TerraBella_Motorcycles
Site Code : 00000000
Start Date : 3/25/2015
Page No : 2

	San Fernando Rd Southbound				Terra Bella St Westbound				San Fernando Rd Northbound				Terra Bella St Eastbound				
Start Time	Left	Thru	Right	App. Total	Left	Thru	Right	App. Total	Left	Thru	Right	App. Total	Left	Thru	Right	App. Total	Int. Total
Peak Hour Analysis From 07:00 AM to 09:45 AM - Peak 1 of 1																	
Peak Hour for Entire Intersection Begins at 07:00 AM																	
07:00 AM	0	0	0	0	0	0	0	0	0	**1**	0	**1**	0	0	0	0	1
07:15 AM	0	0	0	0	0	0	0	0	0	0	0	0	0	0	0	0	0
07:30 AM	0	0	0	0	0	0	0	0	0	1	0	1	0	0	0	0	1
07:45 AM	0	**1**	0	**1**	0	0	0	0	0	0	0	0	0	0	**1**	**1**	**2**
Total Volume	0	1	0	1	0	0	0	0	0	2	0	2	0	0	1	1	4
% App. Total	0	100	0		0	0	0		0	100	0		0	0	100		
PHF	.000	.250	.000	.250	.000	.000	.000	.000	.000	.500	.000	.500	.000	.000	.250	.250	.500

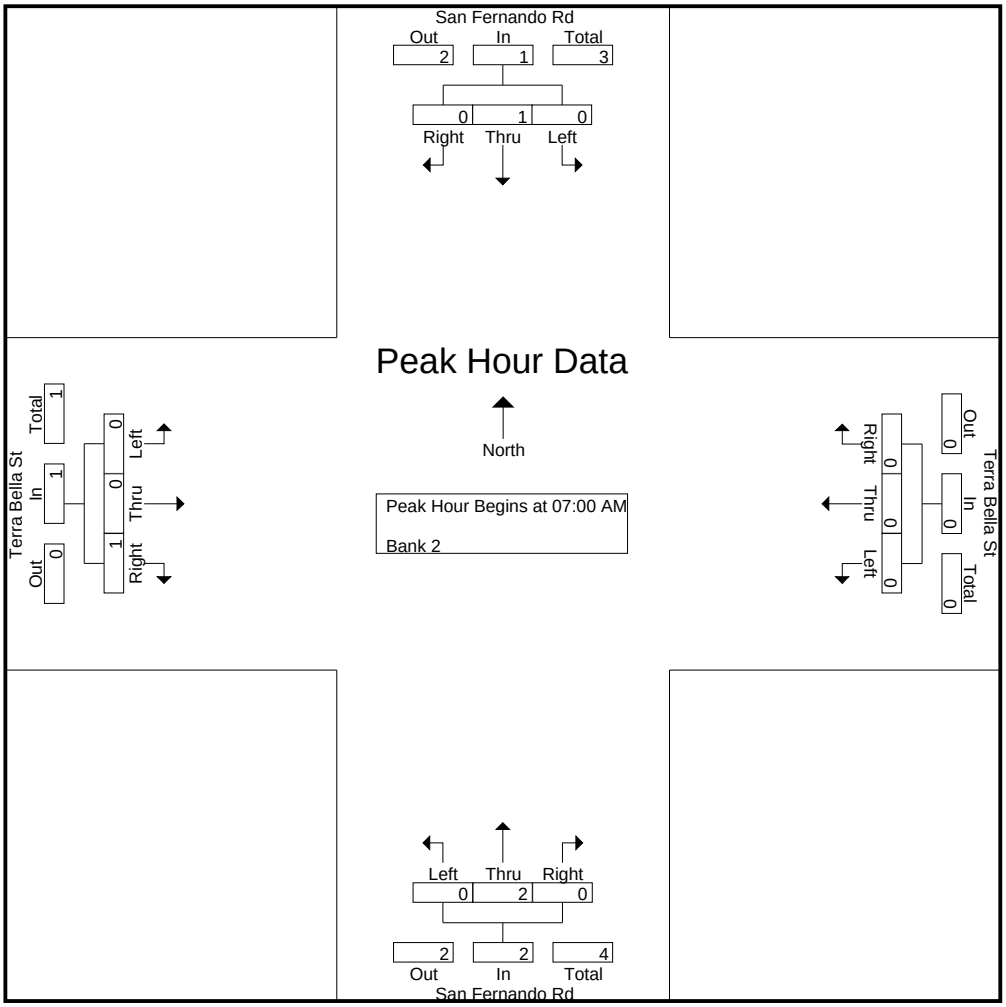

CITY TRAFFIC COUNTERS

626.991.7522

www.ctcounters.com

File Name : SanFernando_TerraBella_Motorcycles
Site Code : 00000000
Start Date : 3/25/2015
Page No : 3

	San Fernando Rd Southbound				Terra Bella St Westbound				San Fernando Rd Northbound				Terra Bella St Eastbound				
Start Time	Left	Thru	Right	App. Total	Left	Thru	Right	App. Total	Left	Thru	Right	App. Total	Left	Thru	Right	App. Total	Int. Total
Peak Hour Analysis From 10:00 AM to 01:45 PM - Peak 1 of 1																	
Peak Hour for Entire Intersection Begins at 12:00 PM																	
12:00 PM	0	0	0	0	0	0	0	0	0	0	0	0	0	0	0	0	0
12:15 PM	0	0	0	0	0	0	0	0	0	**1**	0	**1**	**1**	0	**1**	**2**	**3**
12:30 PM	0	0	0	0	0	0	0	0	**1**	0	0	1	0	0	0	0	1
12:45 PM	0	**1**	0	**1**	0	0	0	0	0	1	0	1	0	0	0	0	2
Total Volume	0	1	0	1	0	0	0	0	1	2	0	3	1	0	1	2	6
% App. Total	0	100	0		0	0	0		33.3	66.7	0		50	0	50		
PHF	.000	.250	.000	.250	.000	.000	.000	.000	.250	.500	.000	.750	.250	.000	.250	.250	.500

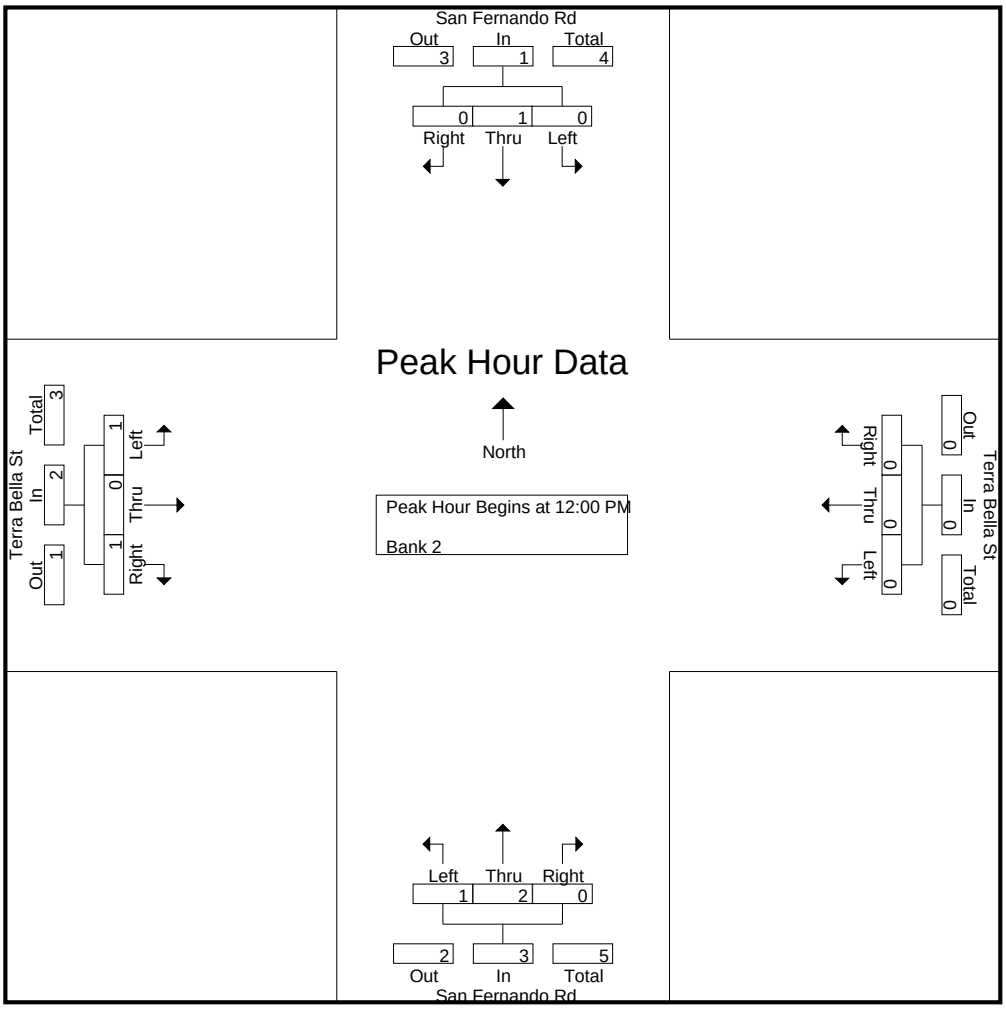

CITY TRAFFIC COUNTERS

626.991.7522

www.ctcounters.com

File Name : SanFernando_TerraBella_Motorcycles
Site Code : 00000000
Start Date : 3/25/2015
Page No : 4

	San Fernando Rd Southbound				Terra Bella St Westbound				San Fernando Rd Northbound				Terra Bella St Eastbound				
Start Time	Left	Thru	Right	App. Total	Left	Thru	Right	App. Total	Left	Thru	Right	App. Total	Left	Thru	Right	App. Total	Int. Total
Peak Hour Analysis From 02:00 PM to 05:45 PM - Peak 1 of 1																	
Peak Hour for Entire Intersection Begins at 04:30 PM																	
04:30 PM	0	2	0	2	0	0	0	0	0	0	0	0	0	0	0	0	2
04:45 PM	0	**3**	0	**3**	0	0	0	0	0	0	**1**	**1**	0	0	0	0	**4**
05:00 PM	0	0	0	0	0	0	0	0	0	**1**	0	1	0	0	0	0	1
05:15 PM	0	1	0	1	0	0	0	0	0	1	0	1	0	0	0	0	2
Total Volume	0	6	0	6	0	0	0	0	0	2	1	3	0	0	0	0	9
% App. Total	0	100	0		0	0	0		0	66.7	33.3		0	0	0		
PHF	.000	.500	.000	.500	.000	.000	.000	.000	.000	.500	.250	.750	.000	.000	.000	.000	.563

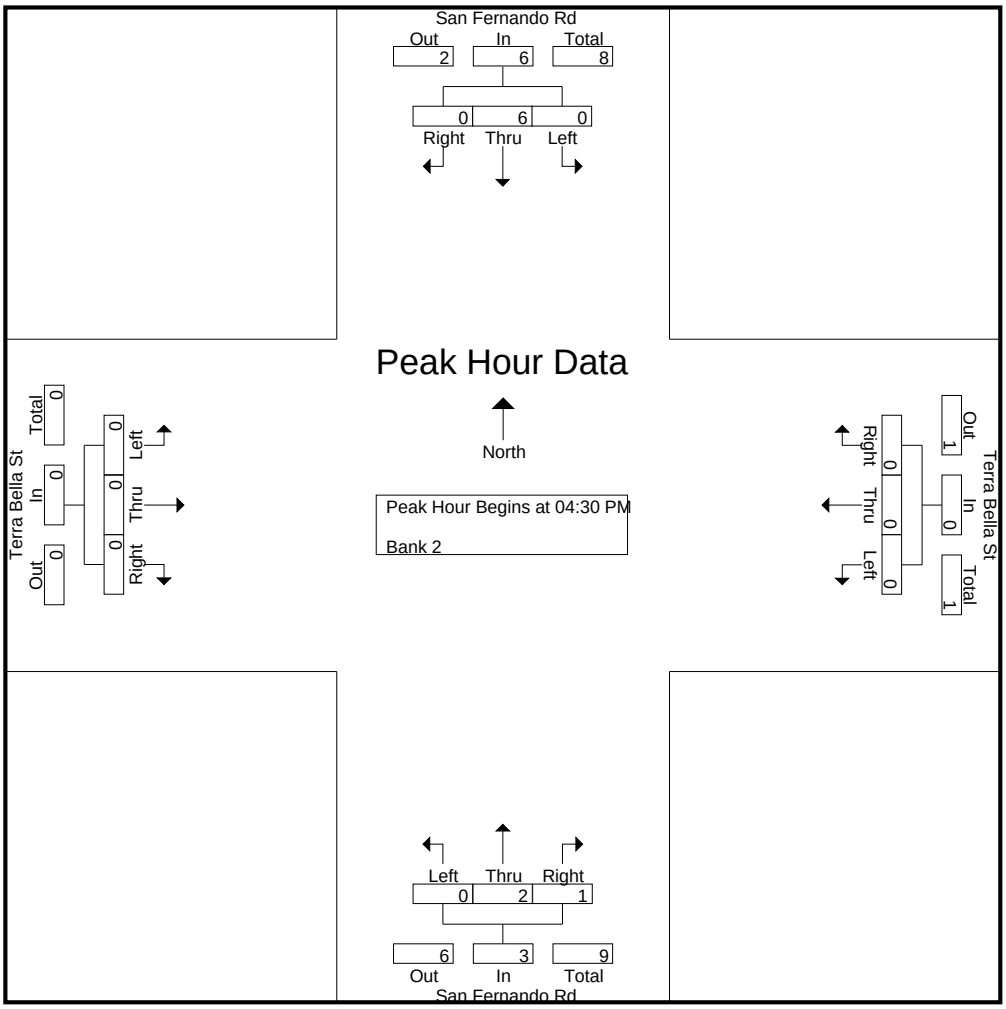

CITY TRAFFIC COUNTERS

626.991.7522

www.ctcounters.com

File Name : SanFernando_TerraBella_Buses
Site Code : 00000000
Start Date : 3/25/2015
Page No : 1

Groups Printed- Bank 1

	San Fernando Rd Southbound			Terra Bella St Westbound			San Fernando Rd Northbound			Terra Bella St Eastbound			
Start Time	Left	Thru	Right	Left	Thru	Right	Left	Thru	Right	Left	Thru	Right	Int. Total
07:00 AM	0	2	0	0	0	0	0	1	0	0	0	0	3
07:15 AM	0	3	0	0	0	0	0	2	0	0	0	0	5
07:30 AM	0	1	0	0	0	0	0	1	0	0	0	0	2
07:45 AM	0	2	0	0	0	0	0	2	0	0	0	0	4
Total	0	8	0	0	0	0	0	6	0	0	0	0	14
08:00 AM	0	3	0	0	0	0	0	1	0	0	0	0	4
08:15 AM	0	1	0	0	0	0	0	2	0	0	0	0	3
08:30 AM	0	2	0	0	0	0	0	3	0	0	0	0	5
08:45 AM	0	2	0	0	0	0	0	2	0	0	0	0	4
Total	0	8	0	0	0	0	0	8	0	0	0	0	16
09:00 AM	0	1	0	0	0	0	0	2	0	0	0	0	3
09:15 AM	0	0	0	0	0	0	0	2	0	0	0	0	2
09:30 AM	0	1	0	0	0	0	0	0	0	0	0	0	1
09:45 AM	0	1	0	0	0	0	0	0	0	0	1	0	2
Total	0	3	0	0	0	0	0	4	0	0	1	0	8
12:00 PM	0	1	0	0	0	0	0	0	0	0	0	0	1
12:15 PM	0	3	0	0	0	0	0	2	0	0	0	0	5
12:45 PM	0	2	0	0	0	0	0	0	0	0	0	0	2
Total	0	6	0	0	0	0	0	2	0	0	0	0	8
01:00 PM	0	0	0	0	0	0	0	1	0	0	0	0	1
01:15 PM	0	1	0	0	0	0	0	1	0	0	0	0	2
01:30 PM	0	2	0	0	0	0	0	1	0	0	0	0	3
01:45 PM	0	1	0	0	0	0	0	1	0	0	0	0	2
Total	0	4	0	0	0	0	0	4	0	0	0	0	8
03:00 PM	0	1	0	0	0	0	0	1	0	0	0	0	2
03:15 PM	0	2	0	0	0	0	0	1	0	0	0	0	3
03:30 PM	0	2	0	0	0	0	0	2	0	0	0	0	4
03:45 PM	0	3	0	0	0	0	0	0	0	0	0	0	3
Total	0	8	0	0	0	0	0	4	0	0	0	0	12
04:00 PM	0	2	0	0	0	0	0	0	0	0	0	0	2
04:15 PM	0	2	0	0	0	0	0	3	0	0	0	0	5
04:30 PM	0	2	0	0	0	0	0	1	0	0	0	0	3
04:45 PM	0	0	0	0	0	0	0	1	0	0	0	0	1
Total	0	6	0	0	0	0	0	5	0	0	0	0	11
05:00 PM	0	2	0	0	0	0	0	3	0	0	0	0	5
05:15 PM	0	0	0	0	0	0	0	1	0	0	0	0	1
05:30 PM	0	1	0	0	0	0	0	2	0	0	0	0	3
05:45 PM	0	1	0	0	0	0	0	1	0	0	0	0	2
Total	0	4	0	0	0	0	0	7	0	0	0	0	11
Grand Total	0	47	0	0	0	0	0	40	0	0	1	0	88
Apprch %	0	100	0	0	0	0	0	100	0	0	100	0	
Total %	0	53.4	0	0	0	0	0	45.5	0	0	1.1	0	

CITY TRAFFIC COUNTERS

626.991.7522

www.ctcounters.com

File Name : SanFernando_TerraBella_Buses
Site Code : 00000000
Start Date : 3/25/2015
Page No : 2

	San Fernando Rd Southbound				Terra Bella St Westbound				San Fernando Rd Northbound				Terra Bella St Eastbound				
Start Time	Left	Thru	Right	App. Total	Left	Thru	Right	App. Total	Left	Thru	Right	App. Total	Left	Thru	Right	App. Total	Int. Total
Peak Hour Analysis From 07:00 AM to 09:45 AM - Peak 1 of 1																	
Peak Hour for Entire Intersection Begins at 07:45 AM																	
07:45 AM	0	2	0	2	0	0	0	0	0	2	0	2	0	0	0	0	4
08:00 AM	0	**3**	0	**3**	0	0	0	0	0	1	0	1	0	0	0	0	4
08:15 AM	0	1	0	1	0	0	0	0	0	2	0	2	0	0	0	0	3
08:30 AM	0	2	0	2	0	0	0	0	0	**3**	0	**3**	0	0	0	0	**5**
Total Volume	0	8	0	8	0	0	0	0	0	8	0	8	0	0	0	0	16
% App. Total	0	100	0		0	0	0		0	100	0		0	0	0		
PHF	.000	.667	.000	.667	.000	.000	.000	.000	.000	.667	.000	.667	.000	.000	.000	.000	.800

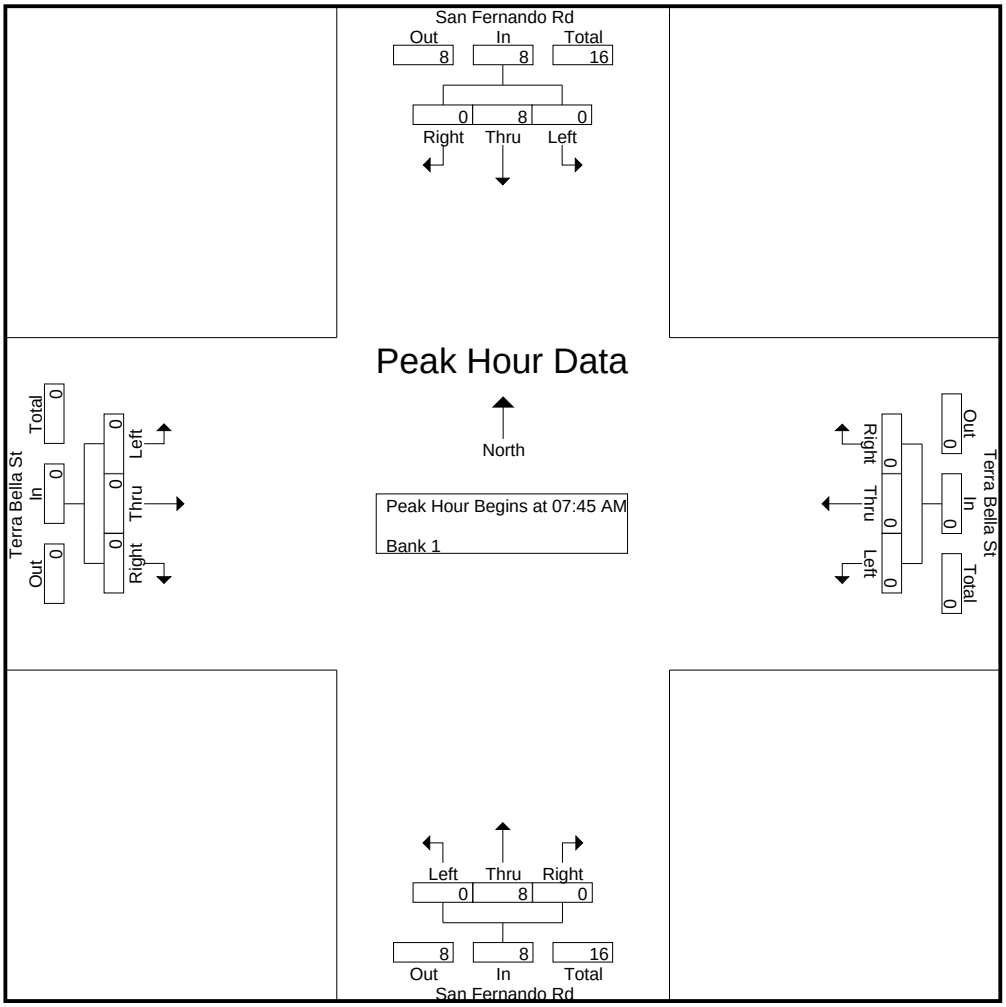

CITY TRAFFIC COUNTERS

626.991.7522

www.ctcounters.com

File Name : SanFernando_TerraBella_Buses
Site Code : 00000000
Start Date : 3/25/2015
Page No : 3

	San Fernando Rd Southbound				Terra Bella St Westbound				San Fernando Rd Northbound				Terra Bella St Eastbound				
Start Time	Left	Thru	Right	App. Total	Left	Thru	Right	App. Total	Left	Thru	Right	App. Total	Left	Thru	Right	App. Total	Int. Total
Peak Hour Analysis From 10:00 AM to 01:45 PM - Peak 1 of 1																	
Peak Hour for Entire Intersection Begins at 12:00 PM																	
12:00 PM	0	1	0	1	0	0	0	0	0	0	0	0	0	0	0	0	1
12:15 PM	0	**3**	0	**3**	0	0	0	0	0	**2**	0	**2**	0	0	0	0	**5**
12:30 PM	0	0	0	0	0	0	0	0	0	0	0	0	0	0	0	0	0
12:45 PM	0	2	0	2	0	0	0	0	0	0	0	0	0	0	0	0	2
Total Volume	0	6	0	6	0	0	0	0	0	2	0	2	0	0	0	0	8
% App. Total	0	100	0		0	0	0		0	100	0		0	0	0		
PHF	.000	.500	.000	.500	.000	.000	.000	.000	.000	.250	.000	.250	.000	.000	.000	.000	.400

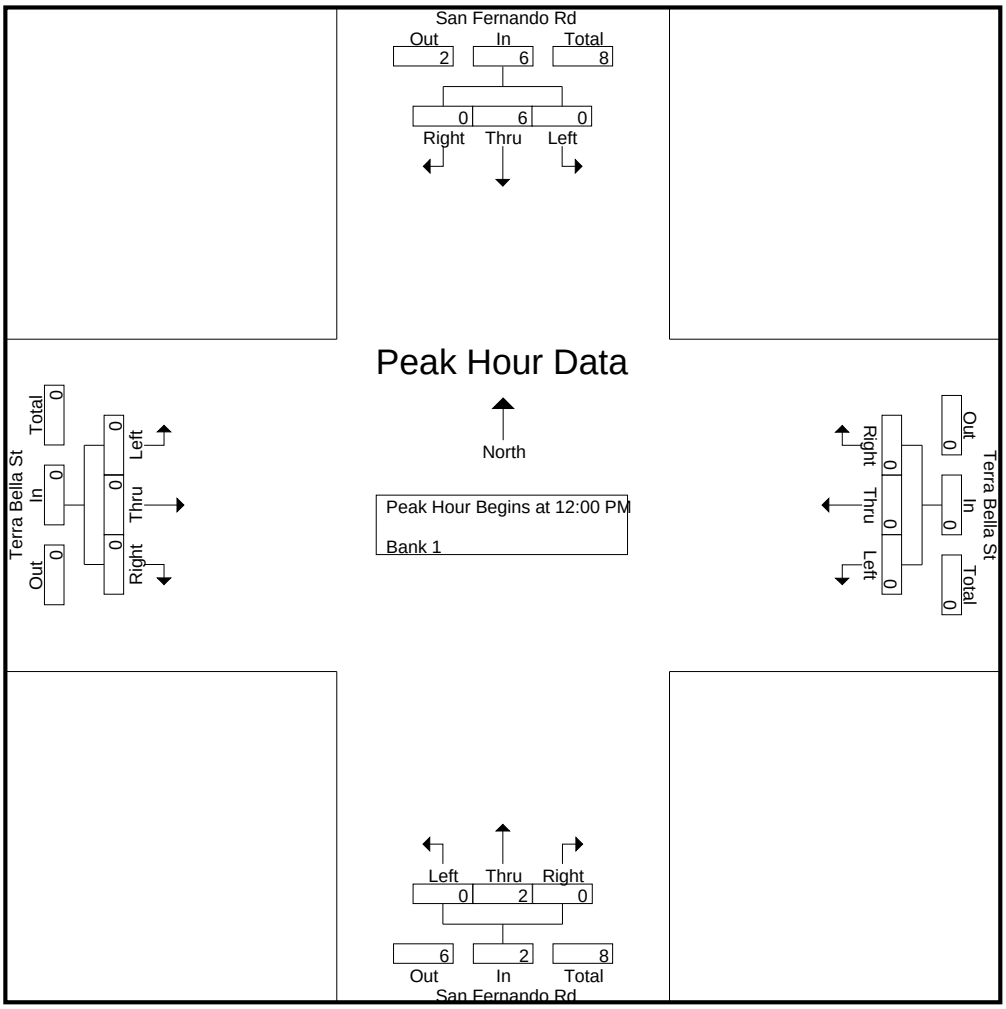

CITY TRAFFIC COUNTERS

626.991.7522

www.ctcounters.com

File Name : SanFernando_TerraBella_Buses
Site Code : 00000000
Start Date : 3/25/2015
Page No : 4

	San Fernando Rd Southbound				Terra Bella St Westbound				San Fernando Rd Northbound				Terra Bella St Eastbound				
Start Time	Left	Thru	Right	App. Total	Left	Thru	Right	App. Total	Left	Thru	Right	App. Total	Left	Thru	Right	App. Total	Int. Total
Peak Hour Analysis From 02:00 PM to 05:45 PM - Peak 1 of 1																	
Peak Hour for Entire Intersection Begins at 03:30 PM																	
03:30 PM	0	2	0	2	0	0	0	0	0	2	0	2	0	0	0	0	4
03:45 PM	0	**3**	0	**3**	0	0	0	0	0	0	0	0	0	0	0	0	3
04:00 PM	0	2	0	2	0	0	0	0	0	0	0	0	0	0	0	0	2
04:15 PM	0	2	0	2	0	0	0	0	0	**3**	0	**3**	0	0	0	0	**5**
Total Volume	0	9	0	9	0	0	0	0	0	5	0	5	0	0	0	0	14
% App. Total	0	100	0		0	0	0		0	100	0		0	0	0		
PHF	.000	.750	.000	.750	.000	.000	.000	.000	.000	.417	.000	.417	.000	.000	.000	.000	.700

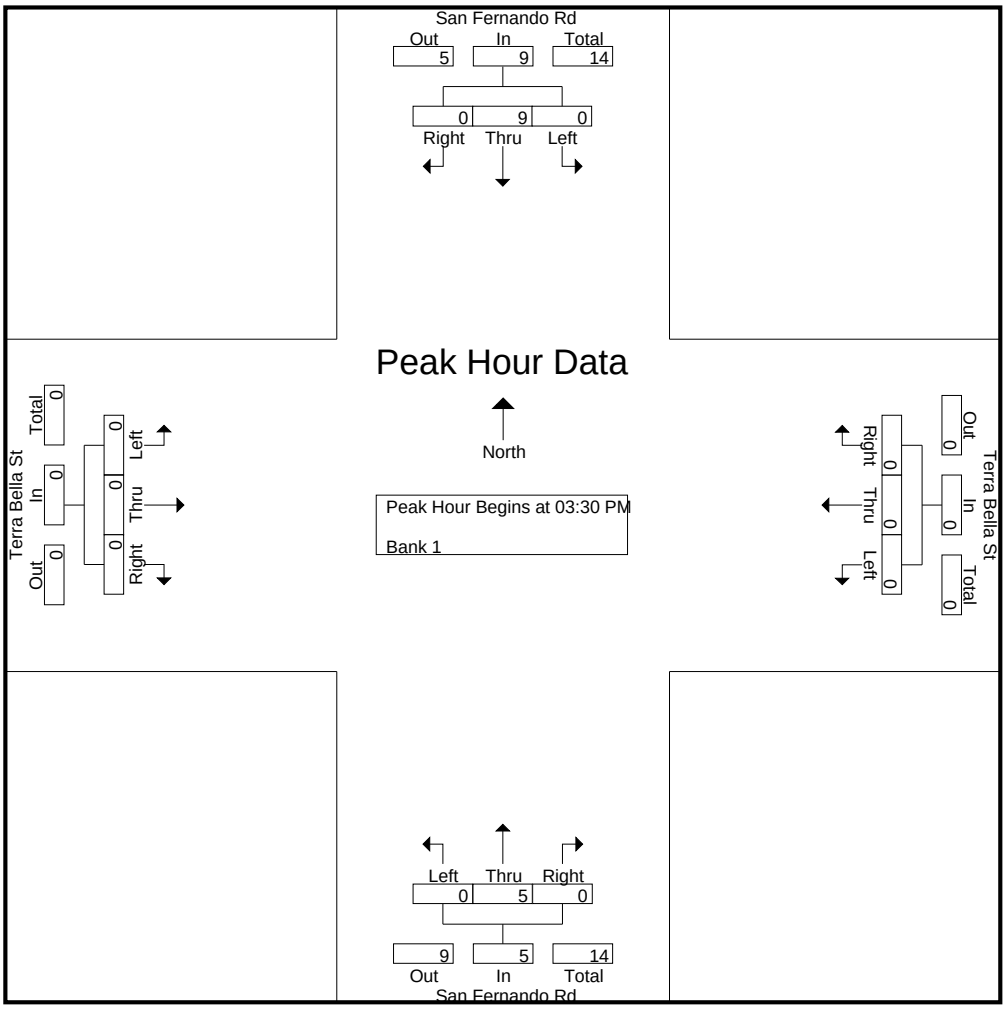

CITY TRAFFIC COUNTERS

626.991.7522

www.ctcounters.com

File Name : SanFernando_TerraBella_2axle
Site Code : 00000000
Start Date : 3/25/2015
Page No : 1

Groups Printed- Unshifted

	San Fernando Rd Southbound			Terra Bella St Westbound			San Fernando Rd Northbound			Terra Bella St Eastbound			
Start Time	Left	Thru	Right	Left	Thru	Right	Left	Thru	Right	Left	Thru	Right	Int. Total
07:00 AM	0	9	0	0	0	0	1	5	0	1	0	1	17
07:15 AM	0	5	1	0	0	0	0	3	0	0	0	1	10
07:30 AM	0	7	0	0	0	0	0	4	0	0	0	0	11
07:45 AM	0	6	1	0	0	0	0	2	0	1	0	1	11
Total	0	27	2	0	0	0	1	14	0	2	0	3	49
08:00 AM	0	6	1	0	0	0	0	4	0	1	0	2	14
08:15 AM	0	7	1	0	0	0	0	2	0	1	0	0	11
08:30 AM	0	5	1	0	0	0	0	5	0	0	0	1	12
08:45 AM	0	4	1	0	0	0	0	7	0	1	0	0	13
Total	0	22	4	0	0	0	0	18	0	3	0	3	50
09:00 AM	0	8	1	0	0	0	0	4	0	1	0	2	16
09:15 AM	0	6	0	0	0	0	0	8	0	1	0	1	16
09:30 AM	0	6	1	0	0	0	0	6	0	1	0	1	15
09:45 AM	0	5	0	0	0	0	1	6	0	2	0	1	15
Total	0	25	2	0	0	0	1	24	0	5	0	5	62
12:00 PM	0	5	1	0	0	0	1	0	0	1	0	0	8
12:15 PM	0	7	2	0	0	0	0	8	0	2	0	1	20
12:30 PM	0	8	1	0	0	0	1	8	0	2	0	1	21
12:45 PM	0	6	1	0	0	0	0	6	0	2	0	1	16
Total	0	26	5	0	0	0	2	22	0	7	0	3	65
01:00 PM	0	6	0	0	0	0	3	3	0	1	0	3	16
01:15 PM	0	7	0	0	0	0	0	4	0	1	0	1	13
01:30 PM	0	8	4	0	0	0	1	9	0	2	0	0	24
01:45 PM	0	9	0	0	0	0	1	7	0	0	0	1	18
Total	0	30	4	0	0	0	5	23	0	4	0	5	71
03:00 PM	0	5	0	0	0	0	2	2	0	0	0	0	9
03:15 PM	0	7	1	0	0	0	1	3	0	1	0	1	14
03:30 PM	0	10	0	0	0	0	0	8	0	5	0	0	23
03:45 PM	0	4	1	0	0	0	0	7	0	2	0	2	16
Total	0	26	2	0	0	0	3	20	0	8	0	3	62
04:00 PM	0	3	1	0	0	0	2	8	0	1	0	2	17
04:15 PM	0	4	0	0	0	0	0	9	0	1	0	1	15
04:30 PM	0	2	2	0	0	0	0	2	0	0	0	2	8
04:45 PM	0	9	0	0	0	0	0	9	0	1	0	1	20
Total	0	18	3	0	0	0	2	28	0	3	0	6	60
05:00 PM	0	3	1	0	0	0	0	1	0	1	0	0	6
05:15 PM	0	3	0	0	0	0	1	3	0	2	0	2	11
05:30 PM	0	2	0	0	0	0	0	5	0	3	0	0	10
05:45 PM	0	4	1	0	0	0	1	8	0	3	0	0	17
Total	0	12	2	0	0	0	2	17	0	9	0	2	44
Grand Total	0	186	24	0	0	0	16	166	0	41	0	30	463
Apprch %	0	88.6	11.4	0	0	0	8.8	91.2	0	57.7	0	42.3	
Total %	0	40.2	5.2	0	0	0	3.5	35.9	0	8.9	0	6.5	

CITY TRAFFIC COUNTERS

626.991.7522

www.ctcounters.com

File Name : SanFernando_TerraBella_2axle
Site Code : 00000000
Start Date : 3/25/2015
Page No : 2

	San Fernando Rd Southbound				Terra Bella St Westbound				San Fernando Rd Northbound				Terra Bella St Eastbound				
Start Time	Left	Thru	Right	App. Total	Left	Thru	Right	App. Total	Left	Thru	Right	App. Total	Left	Thru	Right	App. Total	Int. Total
Peak Hour Analysis From 07:00 AM to 09:45 AM - Peak 1 of 1																	
Peak Hour for Entire Intersection Begins at 09:00 AM																	
09:00 AM	0	**8**	**1**	**9**	0	0	0	0	0	4	0	4	1	0	**2**	**3**	**16**
09:15 AM	0	6	0	6	0	0	0	0	0	**8**	0	**8**	1	0	1	2	16
09:30 AM	0	6	1	7	0	0	0	0	0	6	0	6	1	0	1	2	15
09:45 AM	0	5	0	5	0	0	0	0	**1**	6	0	7	**2**	0	1	3	15
Total Volume	0	25	2	27	0	0	0	0	1	24	0	25	5	0	5	10	62
% App. Total	0	92.6	7.4		0	0	0		4	96	0		50	0	50		
PHF	.000	.781	.500	.750	.000	.000	.000	.000	.250	.750	.000	.781	.625	.000	.625	.833	.969

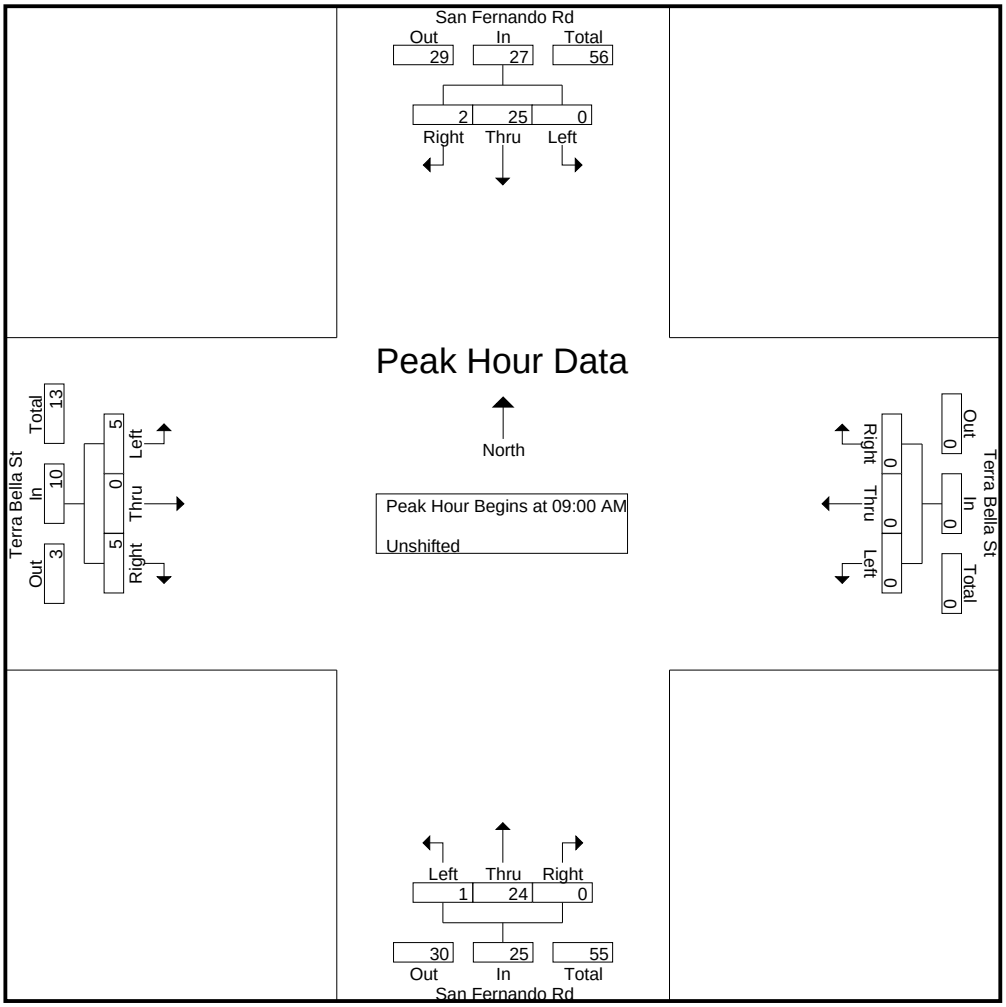

CITY TRAFFIC COUNTERS

626.991.7522

www.ctcounters.com

File Name : SanFernando_TerraBella_2axle
Site Code : 00000000
Start Date : 3/25/2015
Page No : 3

	San Fernando Rd Southbound				Terra Bella St Westbound				San Fernando Rd Northbound				Terra Bella St Eastbound				
Start Time	Left	Thru	Right	App. Total	Left	Thru	Right	App. Total	Left	Thru	Right	App. Total	Left	Thru	Right	App. Total	Int. Total
Peak Hour Analysis From 10:00 AM to 01:45 PM - Peak 1 of 1																	
Peak Hour for Entire Intersection Begins at 12:15 PM																	
12:15 PM	0	7	**2**	**9**	0	0	0	0	0	**8**	0	8	**2**	0	1	3	20
12:30 PM	0	**8**	1	9	0	0	0	0	1	8	0	**9**	2	0	1	3	**21**
12:45 PM	0	6	1	7	0	0	0	0	0	6	0	6	2	0	1	3	16
01:00 PM	0	6	0	6	0	0	0	0	**3**	3	0	6	1	0	**3**	**4**	16
Total Volume	0	27	4	31	0	0	0	0	4	25	0	29	7	0	6	13	73
% App. Total	0	87.1	12.9		0	0	0		13.8	86.2	0		53.8	0	46.2		
PHF	.000	.844	.500	.861	.000	.000	.000	.000	.333	.781	.000	.806	.875	.000	.500	.813	.869

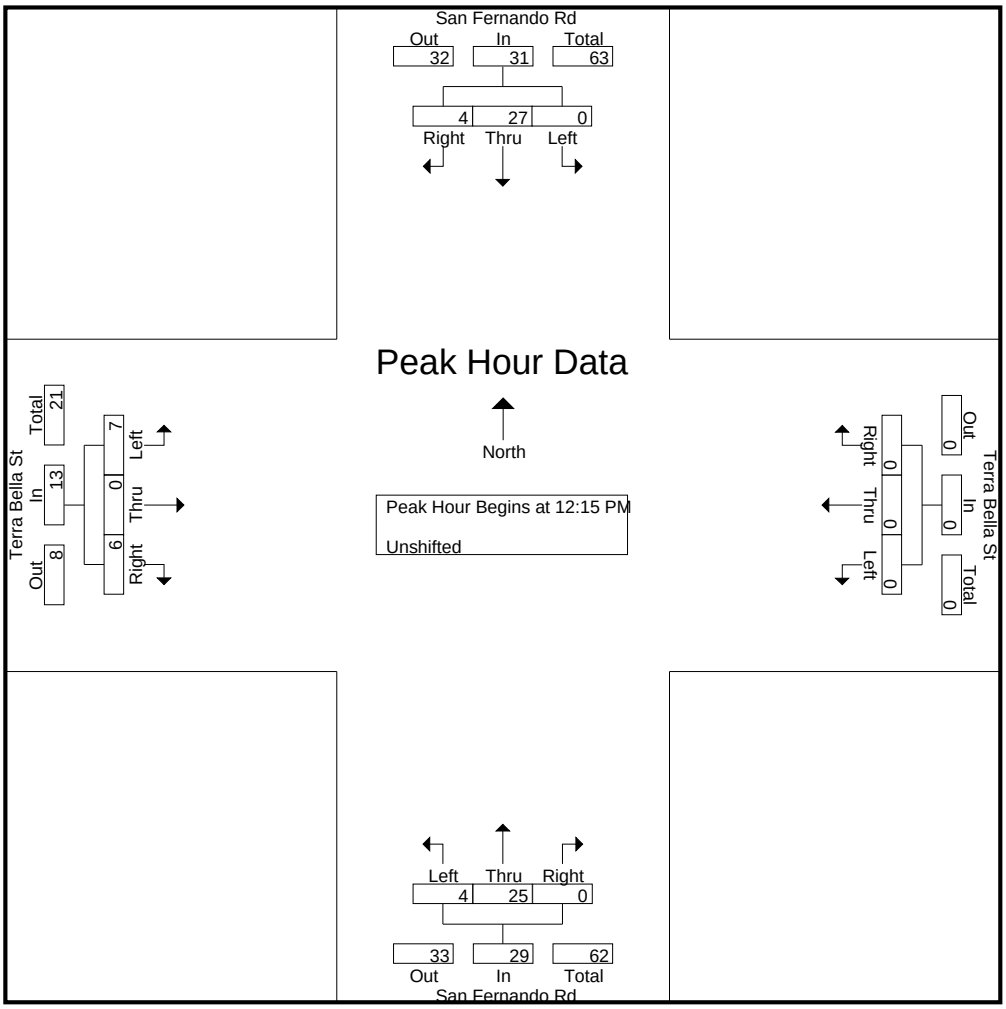

CITY TRAFFIC COUNTERS

626.991.7522

www.ctcounters.com

File Name : SanFernando_TerraBella_2axle
Site Code : 00000000
Start Date : 3/25/2015
Page No : 4

	San Fernando Rd Southbound				Terra Bella St Westbound				San Fernando Rd Northbound				Terra Bella St Eastbound				
Start Time	Left	Thru	Right	App. Total	Left	Thru	Right	App. Total	Left	Thru	Right	App. Total	Left	Thru	Right	App. Total	Int. Total
Peak Hour Analysis From 02:00 PM to 05:45 PM - Peak 1 of 1																	
Peak Hour for Entire Intersection Begins at 03:30 PM																	
03:30 PM	0	**10**	0	**10**	0	0	0	0	0	8	0	8	**5**	0	0	**5**	**23**
03:45 PM	0	4	**1**	5	0	0	0	0	0	7	0	7	2	0	**2**	4	16
04:00 PM	0	3	1	4	0	0	0	0	**2**	8	0	**10**	1	0	2	3	17
04:15 PM	0	4	0	4	0	0	0	0	0	**9**	0	9	1	0	1	2	15
Total Volume	0	21	2	23	0	0	0	0	2	32	0	34	9	0	5	14	71
% App. Total	0	91.3	8.7		0	0	0		5.9	94.1	0		64.3	0	35.7		
PHF	.000	.525	.500	.575	.000	.000	.000	.000	.250	.889	.000	.850	.450	.000	.625	.700	.772

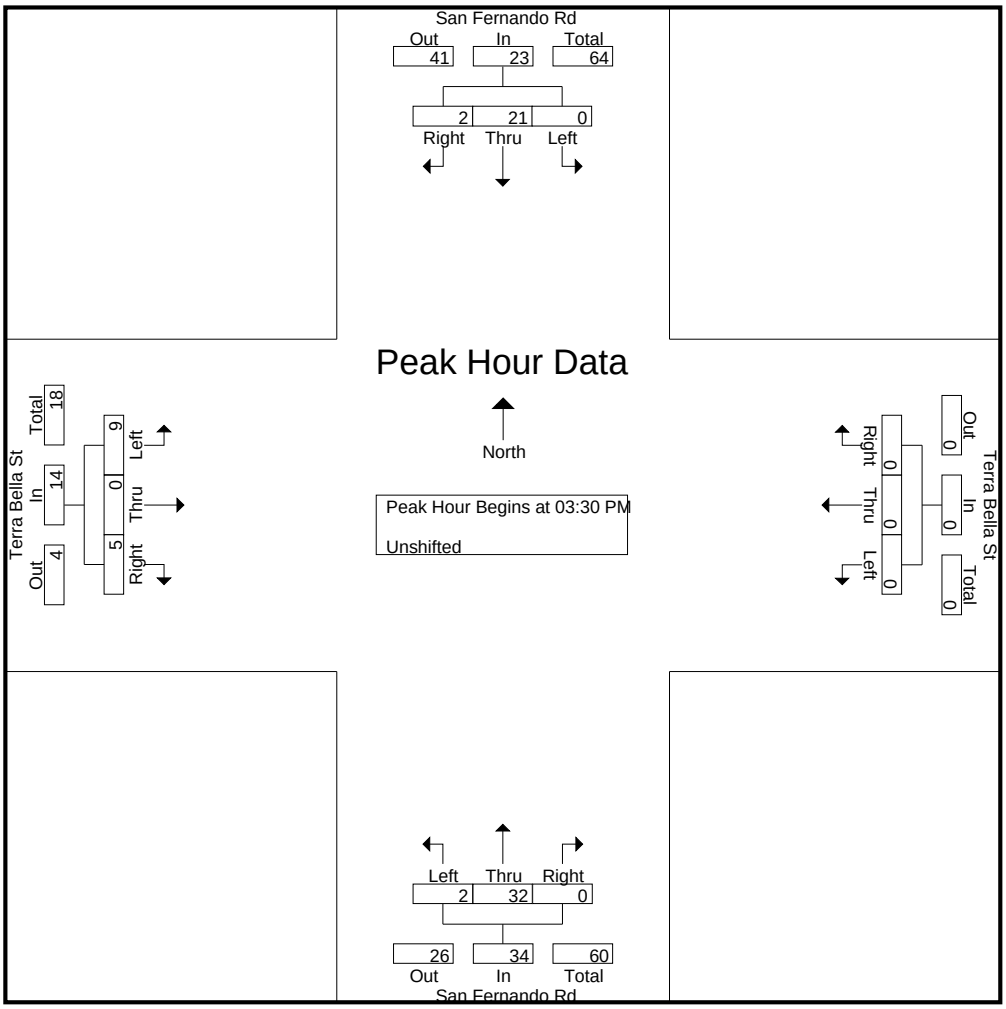

CITY TRAFFIC COUNTERS

626.991.7522

www.ctcounters.com

File Name : SanFernando_TerraBella_3axle
Site Code : 00000000
Start Date : 3/25/2015
Page No : 1

Groups Printed- Bank 1

	San Fernando Rd Southbound			Terra Bella St Westbound			San Fernando Rd Northbound			Terra Bella St Eastbound			
Start Time	Left	Thru	Right	Left	Thru	Right	Left	Thru	Right	Left	Thru	Right	Int. Total
07:00 AM	0	5	0	0	0	0	0	0	0	0	0	0	5
07:15 AM	0	1	0	0	0	0	1	1	0	0	0	0	3
07:30 AM	0	2	1	0	0	0	1	0	0	0	0	0	4
07:45 AM	0	1	0	0	0	0	0	0	0	0	0	0	1
Total	0	9	1	0	0	0	2	1	0	0	0	0	13
08:00 AM	0	1	0	0	0	0	0	0	0	0	0	0	1
08:15 AM	0	1	0	0	0	0	0	1	0	0	0	0	2
08:30 AM	0	1	0	0	0	0	0	0	0	0	0	0	1
08:45 AM	0	2	0	0	0	0	0	1	0	1	0	0	4
Total	0	5	0	0	0	0	0	2	0	1	0	0	8
09:00 AM	0	2	0	0	0	0	0	1	0	0	0	0	3
09:15 AM	0	2	0	0	0	0	0	0	0	0	0	0	2
09:30 AM	0	1	0	0	0	0	0	0	0	1	0	0	2
09:45 AM	0	0	0	0	0	0	1	0	0	0	0	0	1
Total	0	5	0	0	0	0	1	1	0	1	0	0	8
12:00 PM	0	1	0	0	0	0	0	0	0	0	0	0	1
12:15 PM	0	0	0	0	0	0	0	1	0	0	0	0	1
12:30 PM	0	1	0	0	0	0	0	1	0	0	0	0	2
12:45 PM	0	0	0	0	0	0	0	3	0	0	0	0	3
Total	0	2	0	0	0	0	0	5	0	0	0	0	7
01:00 PM	0	2	0	0	0	0	0	1	0	0	0	0	3
01:15 PM	0	1	0	0	0	0	0	0	0	0	0	0	1
01:30 PM	0	2	0	0	0	0	0	1	0	0	0	0	3
Total	0	5	0	0	0	0	0	2	0	0	0	0	7
03:00 PM	0	0	0	0	0	0	1	0	0	0	0	0	1
03:15 PM	0	1	0	0	0	0	0	1	0	0	0	0	2
03:45 PM	0	2	0	0	0	0	0	1	0	0	0	0	3
Total	0	3	0	0	0	0	1	2	0	0	0	0	6
04:15 PM	0	1	0	0	0	0	0	0	0	0	0	1	2
04:30 PM	0	0	0	0	0	0	0	0	0	0	0	1	1
04:45 PM	0	1	0	0	0	0	0	1	0	0	0	0	2
Total	0	2	0	0	0	0	0	1	0	0	0	2	5
05:00 PM	0	1	0	0	0	0	0	0	0	1	0	0	2
05:15 PM	0	1	0	0	0	0	0	0	0	0	0	0	1
05:30 PM	0	1	0	0	0	0	0	1	0	0	0	0	2
05:45 PM	0	1	0	0	0	0	0	0	0	0	0	0	1
Total	0	4	0	0	0	0	0	1	0	1	0	0	6
Grand Total	0	35	1	0	0	0	4	15	0	3	0	2	60
Apprch %	0	97.2	2.8	0	0	0	21.1	78.9	0	60	0	40	
Total %	0	58.3	1.7	0	0	0	6.7	25	0	5	0	3.3	

CITY TRAFFIC COUNTERS

626.991.7522

www.ctcounters.com

File Name : SanFernando_TerraBella_3axle
Site Code : 00000000
Start Date : 3/25/2015
Page No : 2

	San Fernando Rd Southbound				Terra Bella St Westbound				San Fernando Rd Northbound				Terra Bella St Eastbound				
Start Time	Left	Thru	Right	App. Total	Left	Thru	Right	App. Total	Left	Thru	Right	App. Total	Left	Thru	Right	App. Total	Int. Total
Peak Hour Analysis From 07:00 AM to 09:45 AM - Peak 1 of 1																	
Peak Hour for Entire Intersection Begins at 07:00 AM																	
07:00 AM	0	**5**	0	**5**	0	0	0	0	0	0	0	0	0	0	0	0	**5**
07:15 AM	0	1	0	1	0	0	0	0	**1**	**1**	0	**2**	0	0	0	0	3
07:30 AM	0	2	**1**	3	0	0	0	0	1	0	0	1	0	0	0	0	4
07:45 AM	0	1	0	1	0	0	0	0	0	0	0	0	0	0	0	0	1
Total Volume	0	9	1	10	0	0	0	0	2	1	0	3	0	0	0	0	13
% App. Total	0	90	10		0	0	0		66.7	33.3	0		0	0	0		
PHF	.000	.450	.250	.500	.000	.000	.000	.000	.500	.250	.000	.375	.000	.000	.000	.000	.650

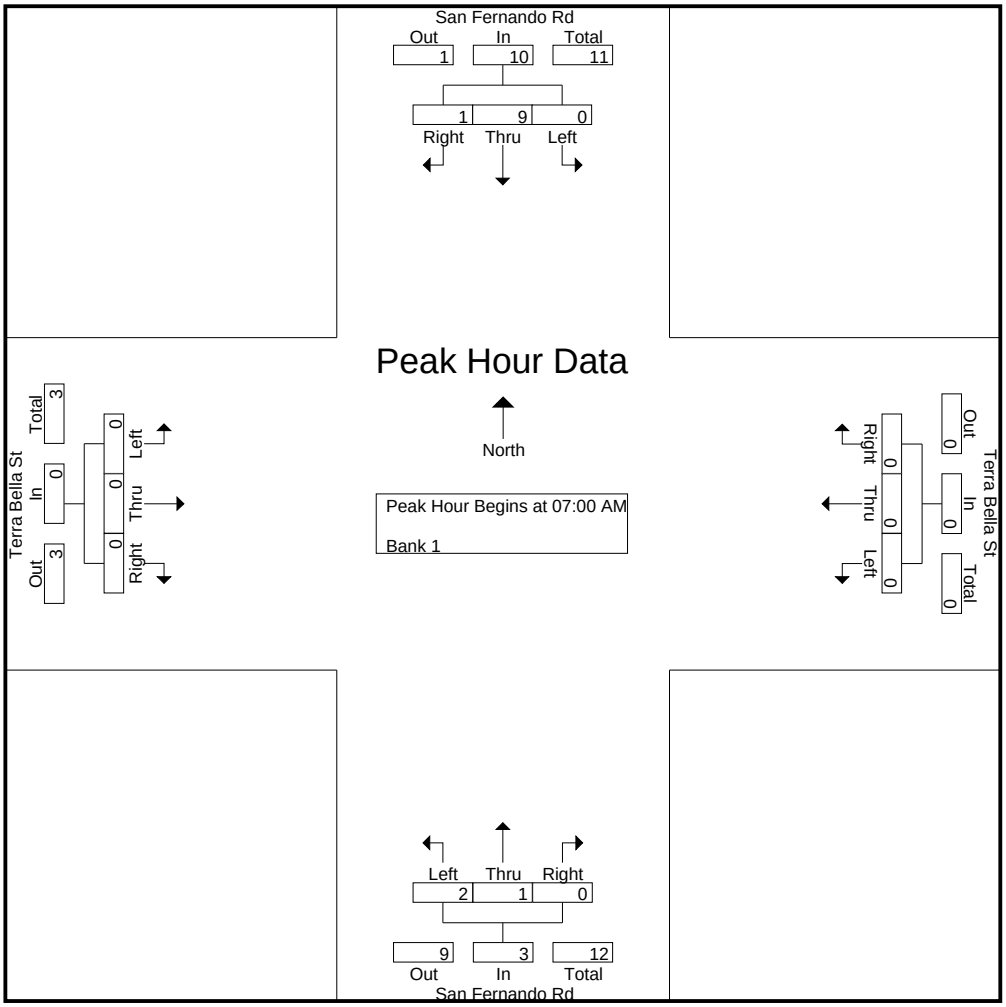

CITY TRAFFIC COUNTERS

626.991.7522

www.ctcounters.com

File Name : SanFernando_TerraBella_3axle
Site Code : 00000000
Start Date : 3/25/2015
Page No : 3

	San Fernando Rd Southbound				Terra Bella St Westbound				San Fernando Rd Northbound				Terra Bella St Eastbound				
Start Time	Left	Thru	Right	App. Total	Left	Thru	Right	App. Total	Left	Thru	Right	App. Total	Left	Thru	Right	App. Total	Int. Total
Peak Hour Analysis From 10:00 AM to 01:45 PM - Peak 1 of 1																	
Peak Hour for Entire Intersection Begins at 12:45 PM																	
12:45 PM	0	0	0	0	0	0	0	0	0	**3**	0	**3**	0	0	0	0	**3**
01:00 PM	0	**2**	0	**2**	0	0	0	0	0	1	0	1	0	0	0	0	3
01:15 PM	0	1	0	1	0	0	0	0	0	0	0	0	0	0	0	0	1
01:30 PM	0	2	0	2	0	0	0	0	0	1	0	1	0	0	0	0	3
Total Volume	0	5	0	5	0	0	0	0	0	5	0	5	0	0	0	0	10
% App. Total	0	100	0		0	0	0		0	100	0		0	0	0		
PHF	.000	.625	.000	.625	.000	.000	.000	.000	.000	.417	.000	.417	.000	.000	.000	.000	.833

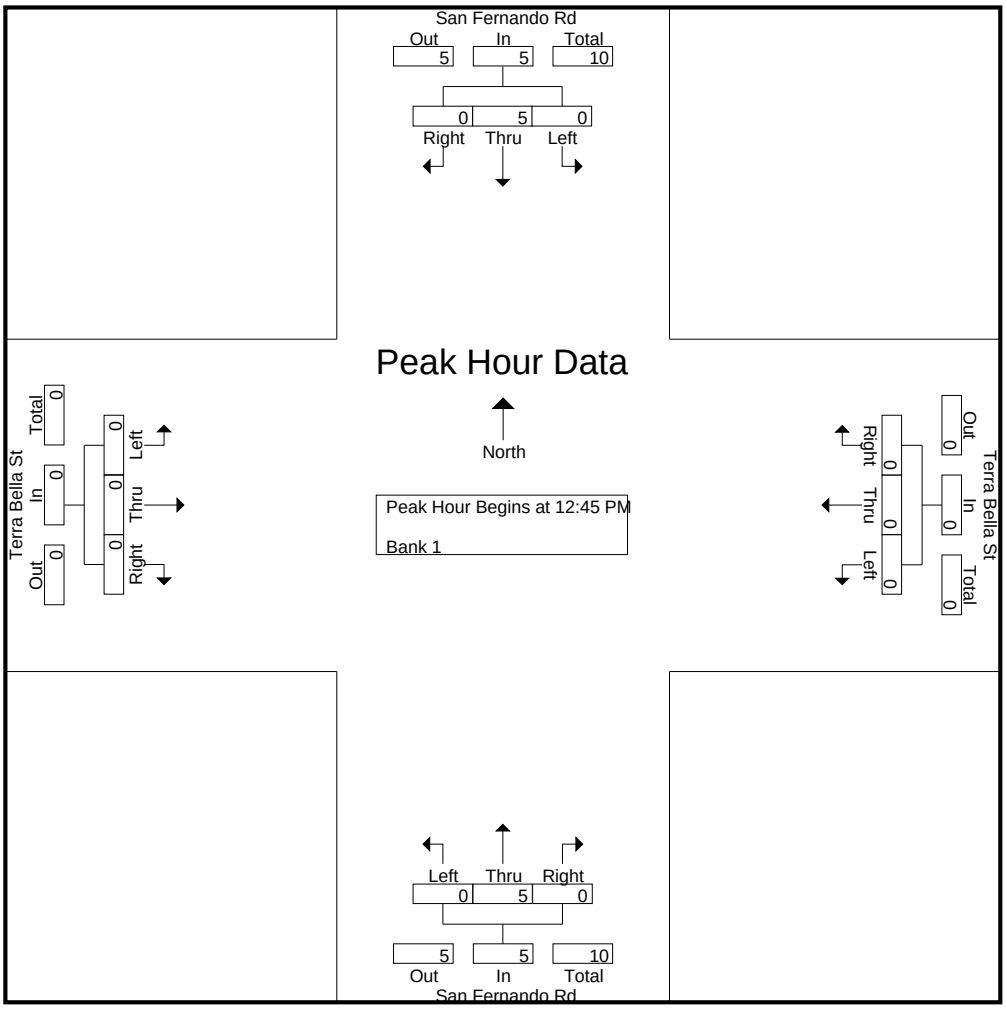

CITY TRAFFIC COUNTERS

626.991.7522

www.ctcounters.com

File Name : SanFernando_TerraBella_3axle
Site Code : 00000000
Start Date : 3/25/2015
Page No : 4

	San Fernando Rd Southbound				Terra Bella St Westbound				San Fernando Rd Northbound				Terra Bella St Eastbound				
Start Time	Left	Thru	Right	App. Total	Left	Thru	Right	App. Total	Left	Thru	Right	App. Total	Left	Thru	Right	App. Total	Int. Total
Peak Hour Analysis From 02:00 PM to 05:45 PM - Peak 1 of 1																	
Peak Hour for Entire Intersection Begins at 04:15 PM																	
04:15 PM	0	**1**	0	**1**	0	0	0	0	0	0	0	0	0	0	**1**	**1**	**2**
04:30 PM	0	0	0	0	0	0	0	0	0	0	0	0	0	0	1	1	1
04:45 PM	0	1	0	1	0	0	0	0	0	**1**	0	**1**	0	0	0	0	2
05:00 PM	0	1	0	1	0	0	0	0	0	0	0	0	**1**	0	0	1	2
Total Volume	0	3	0	3	0	0	0	0	0	1	0	1	1	0	2	3	7
% App. Total	0	100	0		0	0	0		0	100	0		33.3	0	66.7		
PHF	.000	.750	.000	.750	.000	.000	.000	.000	.000	.250	.000	.250	.250	.000	.500	.750	.875

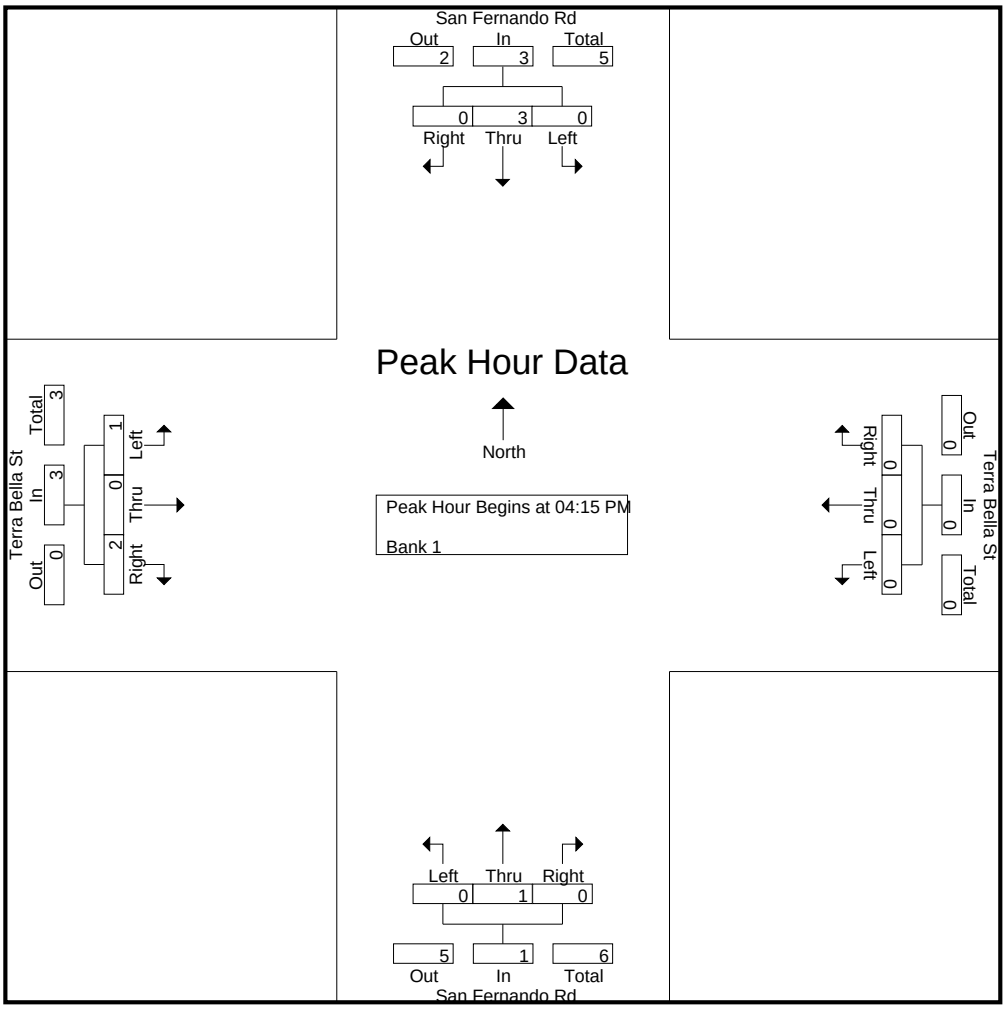

CITY TRAFFIC COUNTERS

626.991.7522

www.ctcounters.com

File Name : SanFernando_TerraBella_4axle
Site Code : 00000000
Start Date : 3/25/2015
Page No : 1

Groups Printed- Bank 2

	San Fernando Rd Southbound			Terra Bella St Westbound			San Fernando Rd Northbound			Terra Bella St Eastbound			
Start Time	Left	Thru	Right	Left	Thru	Right	Left	Thru	Right	Left	Thru	Right	Int. Total
07:00 AM	0	1	0	0	0	0	0	0	0	0	0	0	1
Total	0	1	0	0	0	0	0	0	0	0	0	0	1
08:00 AM	0	2	0	0	0	0	0	0	0	0	0	0	2
08:15 AM	0	2	0	0	0	0	0	0	0	0	0	0	2
08:45 AM	0	0	0	0	0	0	0	0	0	0	0	1	1
Total	0	4	0	0	0	0	0	0	0	0	0	1	5
12:30 PM	0	1	0	0	0	0	0	0	0	0	0	0	1
12:45 PM	0	0	0	0	0	0	0	1	0	0	0	0	1
Total	0	1	0	0	0	0	0	1	0	0	0	0	2
01:15 PM	0	0	0	0	0	0	0	1	0	0	0	0	1
01:30 PM	0	0	0	0	0	0	0	3	0	0	0	0	3
Total	0	0	0	0	0	0	0	4	0	0	0	0	4
03:00 PM	0	1	0	0	0	0	0	0	0	0	0	0	1
03:30 PM	0	0	0	0	0	0	0	1	0	0	0	0	1
03:45 PM	0	1	0	0	0	0	0	1	0	0	0	0	2
Total	0	2	0	0	0	0	0	2	0	0	0	0	4
04:45 PM	0	1	0	0	0	0	0	0	0	0	0	0	1
Total	0	1	0	0	0	0	0	0	0	0	0	0	1
Grand Total	0	9	0	0	0	0	0	7	0	0	0	1	17
Apprch %	0	100	0	0	0	0	0	100	0	0	0	100	
Total %	0	52.9	0	0	0	0	0	41.2	0	0	0	5.9	

CITY TRAFFIC COUNTERS

626.991.7522

www.ctcounters.com

File Name : SanFernando_TerraBella_4axle
Site Code : 00000000
Start Date : 3/25/2015
Page No : 2

	San Fernando Rd Southbound				Terra Bella St Westbound				San Fernando Rd Northbound				Terra Bella St Eastbound				
Start Time	Left	Thru	Right	App. Total	Left	Thru	Right	App. Total	Left	Thru	Right	App. Total	Left	Thru	Right	App. Total	Int. Total
Peak Hour Analysis From 07:00 AM to 09:45 AM - Peak 1 of 1																	
Peak Hour for Entire Intersection Begins at 08:00 AM																	
08:00 AM	0	**2**	0	**2**	0	0	0	0	0	0	0	0	0	0	0	0	**2**
08:15 AM	0	2	0	2	0	0	0	0	0	0	0	0	0	0	0	0	2
08:30 AM	0	0	0	0	0	0	0	0	0	0	0	0	0	0	0	0	0
08:45 AM	0	0	0	0	0	0	0	0	0	0	0	0	0	0	**1**	**1**	1
Total Volume	0	4	0	4	0	0	0	0	0	0	0	0	0	0	1	1	5
% App. Total	0	100	0		0	0	0		0	0	0		0	0	100		
PHF	.000	.500	.000	.500	.000	.000	.000	.000	.000	.000	.000	.000	.000	.000	.250	.250	.625

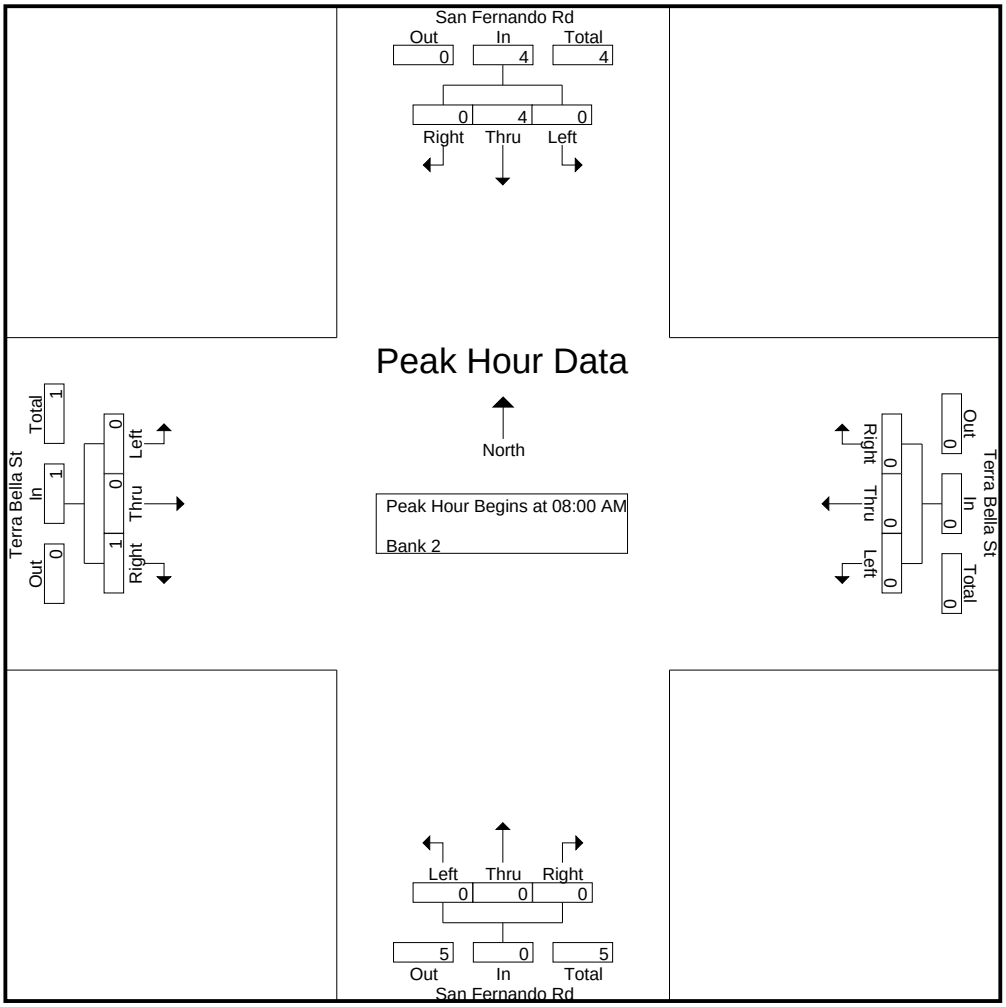

CITY TRAFFIC COUNTERS

626.991.7522

www.ctcounters.com

File Name : SanFernando_TerraBella_4axle
Site Code : 00000000
Start Date : 3/25/2015
Page No : 3

	San Fernando Rd Southbound				Terra Bella St Westbound				San Fernando Rd Northbound				Terra Bella St Eastbound				
Start Time	Left	Thru	Right	App. Total	Left	Thru	Right	App. Total	Left	Thru	Right	App. Total	Left	Thru	Right	App. Total	Int. Total
Peak Hour Analysis From 10:00 AM to 01:45 PM - Peak 1 of 1																	
Peak Hour for Entire Intersection Begins at 12:45 PM																	
12:45 PM	0	0	0	0	0	0	0	0	0	1	0	1	0	0	0	0	1
01:00 PM	0	0	0	0	0	0	0	0	0	0	0	0	0	0	0	0	0
01:15 PM	0	0	0	0	0	0	0	0	0	1	0	1	0	0	0	0	1
01:30 PM	0	0	0	0	0	0	0	0	0	**3**	0	**3**	0	0	0	0	**3**
Total Volume	0	0	0	0	0	0	0	0	0	5	0	5	0	0	0	0	5
% App. Total	0	0	0		0	0	0		0	100	0		0	0	0		
PHF	.000	.000	.000	.000	.000	.000	.000	.000	.000	.417	.000	.417	.000	.000	.000	.000	.417

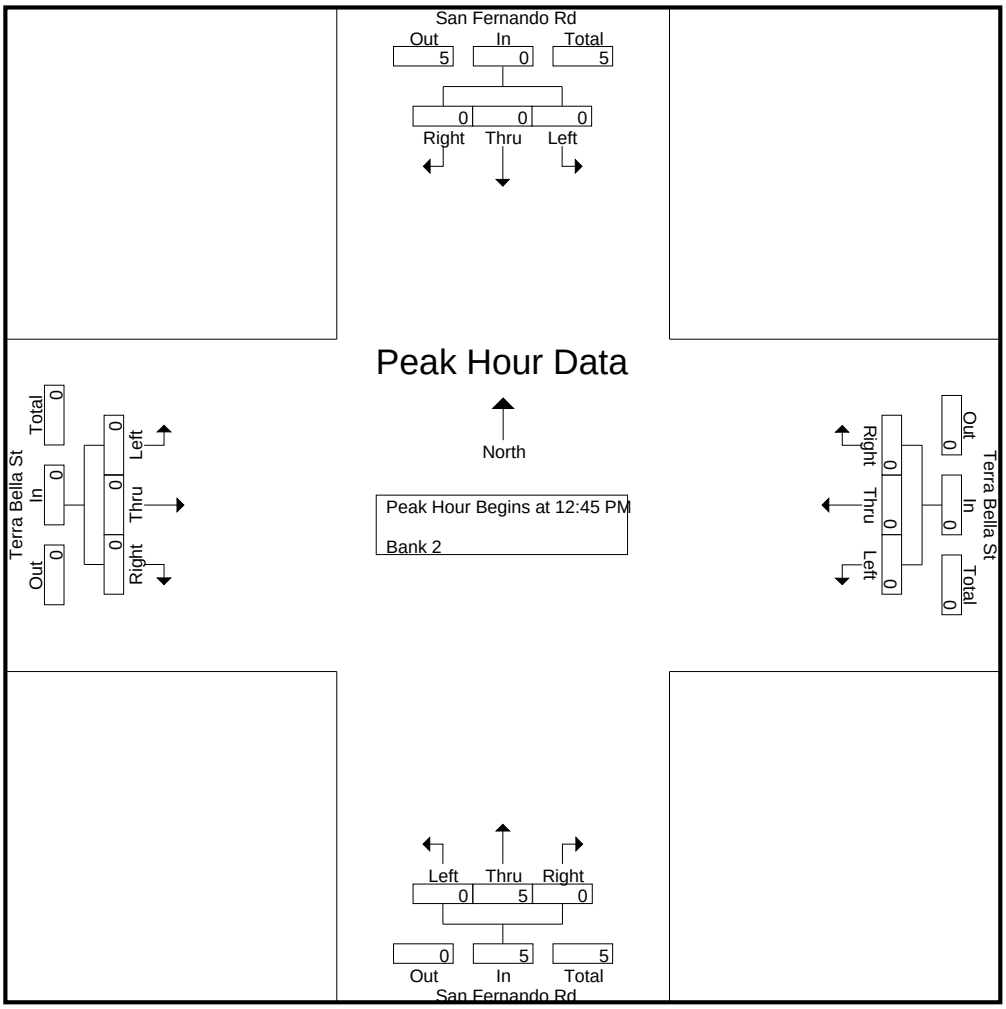

CITY TRAFFIC COUNTERS

626.991.7522

www.ctcounters.com

File Name : SanFernando_TerraBella_4axle
Site Code : 00000000
Start Date : 3/25/2015
Page No : 4

	San Fernando Rd Southbound				Terra Bella St Westbound				San Fernando Rd Northbound				Terra Bella St Eastbound				
Start Time	Left	Thru	Right	App. Total	Left	Thru	Right	App. Total	Left	Thru	Right	App. Total	Left	Thru	Right	App. Total	Int. Total
Peak Hour Analysis From 02:00 PM to 05:45 PM - Peak 1 of 1																	
Peak Hour for Entire Intersection Begins at 03:00 PM																	
03:00 PM	0	**1**	0	**1**	0	0	0	0	0	0	0	0	0	0	0	0	1
03:15 PM	0	0	0	0	0	0	0	0	0	0	0	0	0	0	0	0	0
03:30 PM	0	0	0	0	0	0	0	0	0	**1**	0	**1**	0	0	0	0	1
03:45 PM	0	1	0	1	0	0	0	0	0	1	0	1	0	0	0	0	**2**
Total Volume	0	2	0	2	0	0	0	0	0	2	0	2	0	0	0	0	4
% App. Total	0	100	0		0	0	0		0	100	0		0	0	0		
PHF	.000	.500	.000	.500	.000	.000	.000	.000	.000	.500	.000	.500	.000	.000	.000	.000	.500

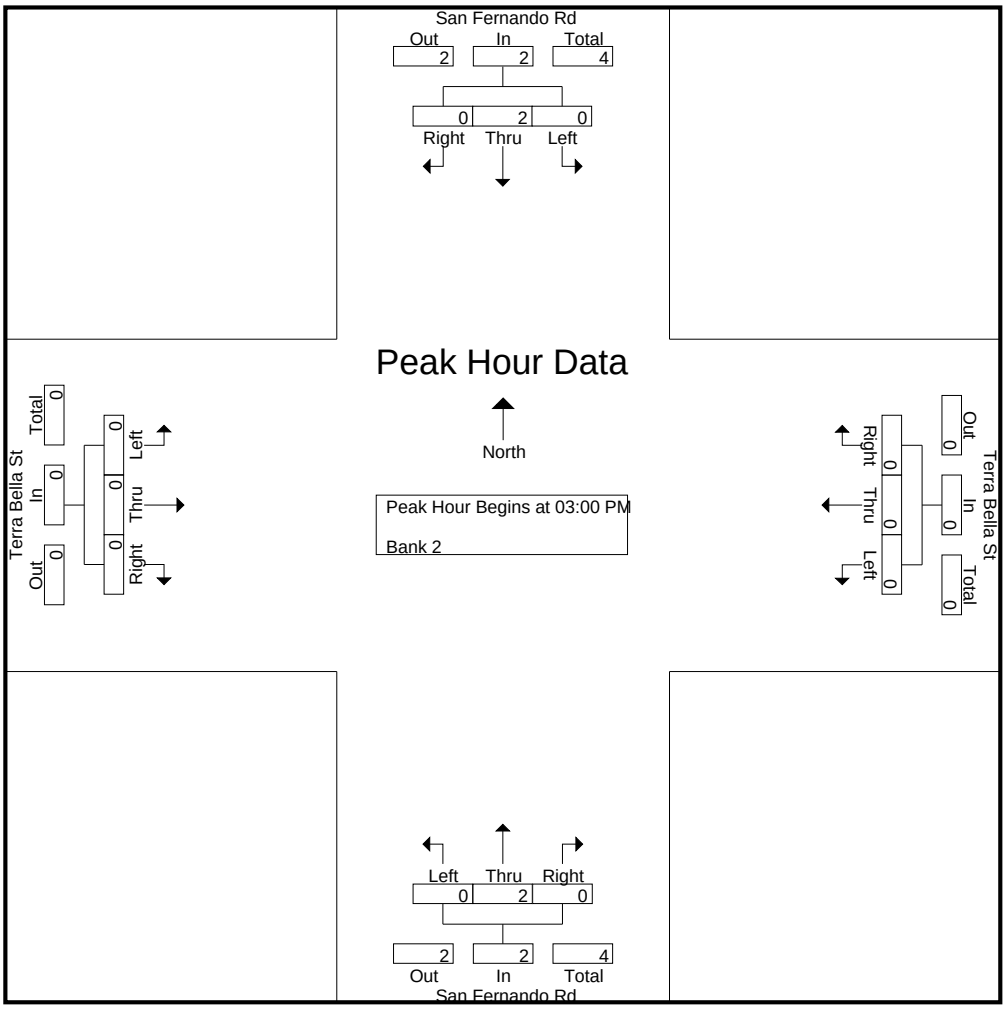

CITY TRAFFIC COUNTERS

626.991.7522

www.ctcounters.com

File Name : sanfernando_terrabella_5axle
Site Code : 00000000
Start Date : 3/25/2015
Page No : 1

Groups Printed- Unshifted

	San Fernando Rd Southbound			Terra Bella St Westbound			San Fernando Rd Northbound			Terra Bella St Eastbound			
Start Time	Left	Thru	Right	Left	Thru	Right	Left	Thru	Right	Left	Thru	Right	Int. Total
07:00 AM	0	2	0	0	0	0	0	1	0	0	0	0	3
07:15 AM	0	3	0	0	0	0	0	0	0	0	0	1	4
07:30 AM	0	2	0	0	0	0	0	0	0	0	0	0	2
07:45 AM	0	1	0	0	0	0	0	0	0	0	0	0	1
Total	0	8	0	0	0	0	0	1	0	0	0	1	10
08:00 AM	0	4	0	0	0	0	0	0	0	0	0	0	4
08:15 AM	0	2	0	0	0	0	0	1	0	0	0	0	3
08:30 AM	0	1	0	0	0	0	0	1	0	0	0	0	2
08:45 AM	0	0	0	0	0	0	0	2	0	0	0	0	2
Total	0	7	0	0	0	0	0	4	0	0	0	0	11
09:00 AM	0	1	0	0	0	0	0	2	0	0	0	0	3
09:15 AM	0	3	0	0	0	0	0	0	0	0	0	0	3
09:30 AM	0	1	0	0	0	0	0	0	0	0	0	0	1
09:45 AM	0	3	0	0	0	0	0	4	0	0	0	0	7
Total	0	8	0	0	0	0	0	6	0	0	0	0	14
12:00 PM	0	0	0	0	0	0	0	3	0	0	0	0	3
Total	0	0	0	0	0	0	0	3	0	0	0	0	3
01:00 PM	0	2	0	0	0	0	0	0	0	0	0	0	2
01:15 PM	0	1	0	0	0	0	0	0	0	0	0	0	1
01:30 PM	0	1	0	0	0	0	0	0	0	0	0	0	1
01:45 PM	0	1	0	0	0	0	0	1	0	0	0	0	2
Total	0	5	0	0	0	0	0	1	0	0	0	0	6
03:00 PM	0	2	0	0	0	0	0	0	0	0	0	0	2
03:15 PM	0	0	0	0	0	0	0	2	0	0	0	0	2
03:30 PM	0	0	0	0	0	0	0	1	0	0	0	0	1
03:45 PM	0	0	0	0	0	0	0	2	0	0	0	0	2
Total	0	2	0	0	0	0	0	5	0	0	0	0	7
04:00 PM	0	1	0	0	0	0	0	1	0	0	0	0	2
04:45 PM	0	0	0	0	0	0	0	1	0	0	0	0	1
Total	0	1	0	0	0	0	0	2	0	0	0	0	3
05:15 PM	0	1	0	0	0	0	0	0	0	0	0	0	1
Total	0	1	0	0	0	0	0	0	0	0	0	0	1
Grand Total	0	32	0	0	0	0	0	22	0	0	0	1	55
Apprch %	0	100	0	0	0	0	0	100	0	0	0	100	
Total %	0	58.2	0	0	0	0	0	40	0	0	0	1.8	

CITY TRAFFIC COUNTERS

626.991.7522

www.ctcounters.com

File Name : sanfernando_terrabella_5axle
Site Code : 00000000
Start Date : 3/25/2015
Page No : 2

	San Fernando Rd Southbound				Terra Bella St Westbound				San Fernando Rd Northbound				Terra Bella St Eastbound				
Start Time	Left	Thru	Right	App. Total	Left	Thru	Right	App. Total	Left	Thru	Right	App. Total	Left	Thru	Right	App. Total	Int. Total
Peak Hour Analysis From 07:00 AM to 09:45 AM - Peak 1 of 1																	
Peak Hour for Entire Intersection Begins at 09:00 AM																	
09:00 AM	0	1	0	1	0	0	0	0	0	2	0	2	0	0	0	0	3
09:15 AM	0	**3**	0	**3**	0	0	0	0	0	0	0	0	0	0	0	0	3
09:30 AM	0	1	0	1	0	0	0	0	0	0	0	0	0	0	0	0	1
09:45 AM	0	3	0	3	0	0	0	0	0	**4**	0	**4**	0	0	0	0	**7**
Total Volume	0	8	0	8	0	0	0	0	0	6	0	6	0	0	0	0	14
% App. Total	0	100	0		0	0	0		0	100	0		0	0	0		
PHF	.000	.667	.000	.667	.000	.000	.000	.000	.000	.375	.000	.375	.000	.000	.000	.000	.500

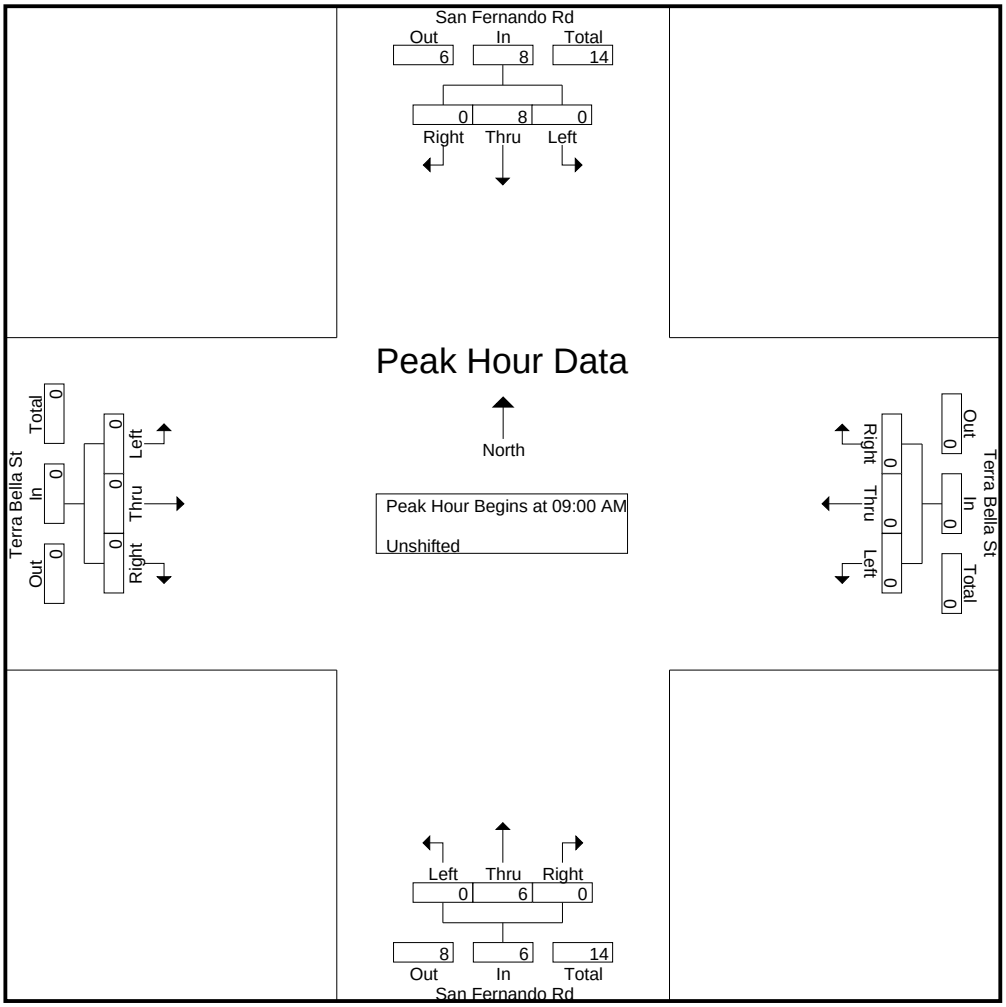

CITY TRAFFIC COUNTERS

626.991.7522

www.ctcounters.com

File Name : sanfernando_terrabella_5axle
Site Code : 00000000
Start Date : 3/25/2015
Page No : 3

	San Fernando Rd Southbound				Terra Bella St Westbound				San Fernando Rd Northbound				Terra Bella St Eastbound				
Start Time	Left	Thru	Right	App. Total	Left	Thru	Right	App. Total	Left	Thru	Right	App. Total	Left	Thru	Right	App. Total	Int. Total
Peak Hour Analysis From 10:00 AM to 01:45 PM - Peak 1 of 1																	
Peak Hour for Entire Intersection Begins at 01:00 PM																	
01:00 PM	0	**2**	0	**2**	0	0	0	0	0	0	0	0	0	0	0	0	**2**
01:15 PM	0	1	0	1	0	0	0	0	0	0	0	0	0	0	0	0	1
01:30 PM	0	1	0	1	0	0	0	0	0	0	0	0	0	0	0	0	1
01:45 PM	0	1	0	1	0	0	0	0	0	**1**	0	**1**	0	0	0	0	2
Total Volume	0	5	0	5	0	0	0	0	0	1	0	1	0	0	0	0	6
% App. Total	0	100	0		0	0	0		0	100	0		0	0	0		
PHF	.000	.625	.000	.625	.000	.000	.000	.000	.000	.250	.000	.250	.000	.000	.000	.000	.750

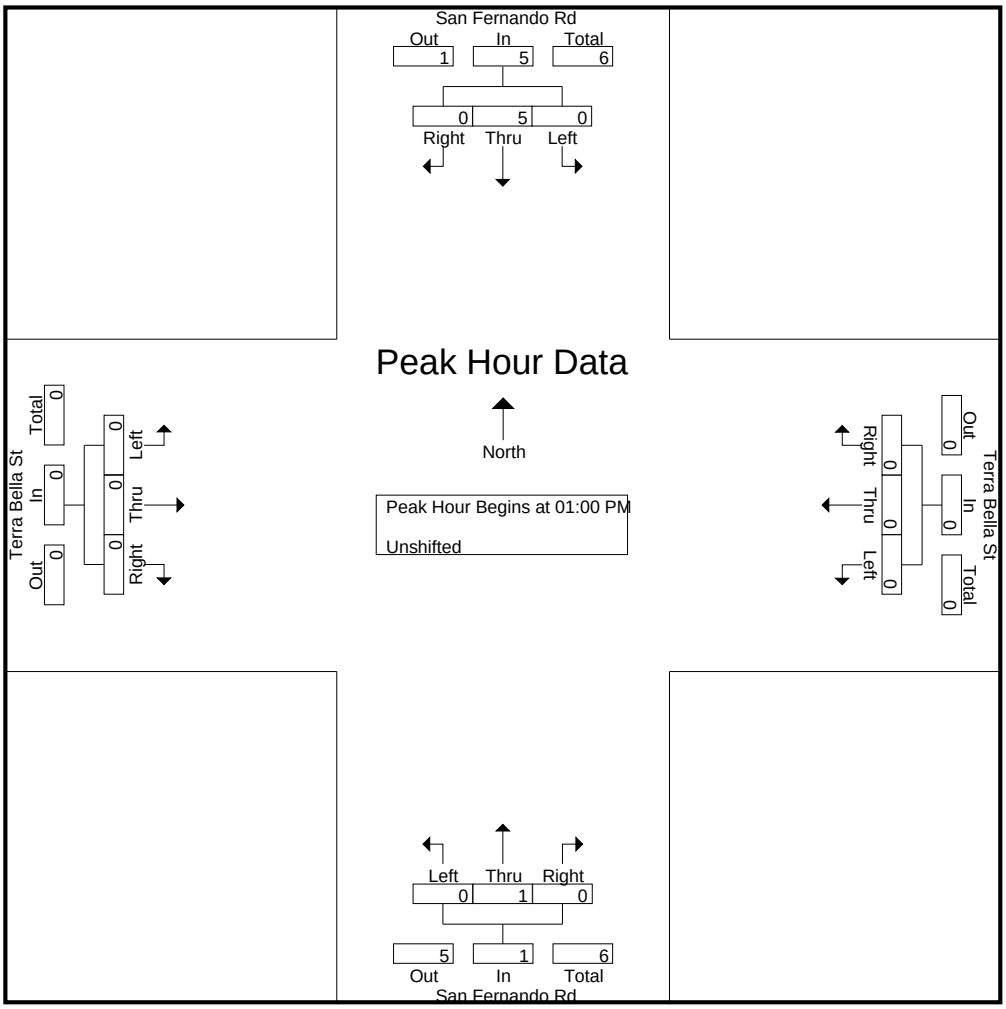

CITY TRAFFIC COUNTERS

626.991.7522

www.ctcounters.com

File Name : sanfernando_terrabella_5axle
Site Code : 00000000
Start Date : 3/25/2015
Page No : 4

	San Fernando Rd Southbound				Terra Bella St Westbound				San Fernando Rd Northbound				Terra Bella St Eastbound				
Start Time	Left	Thru	Right	App. Total	Left	Thru	Right	App. Total	Left	Thru	Right	App. Total	Left	Thru	Right	App. Total	Int. Total
Peak Hour Analysis From 02:00 PM to 05:45 PM - Peak 1 of 1																	
Peak Hour for Entire Intersection Begins at 03:00 PM																	
03:00 PM	0	**2**	0	**2**	0	0	0	0	0	0	0	0	0	0	0	0	**2**
03:15 PM	0	0	0	0	0	0	0	0	0	**2**	0	**2**	0	0	0	0	2
03:30 PM	0	0	0	0	0	0	0	0	0	1	0	1	0	0	0	0	1
03:45 PM	0	0	0	0	0	0	0	0	0	2	0	2	0	0	0	0	2
Total Volume	0	2	0	2	0	0	0	0	0	5	0	5	0	0	0	0	7
% App. Total	0	100	0		0	0	0		0	100	0		0	0	0		
PHF	.000	.250	.000	.250	.000	.000	.000	.000	.000	.625	.000	.625	.000	.000	.000	.000	.875

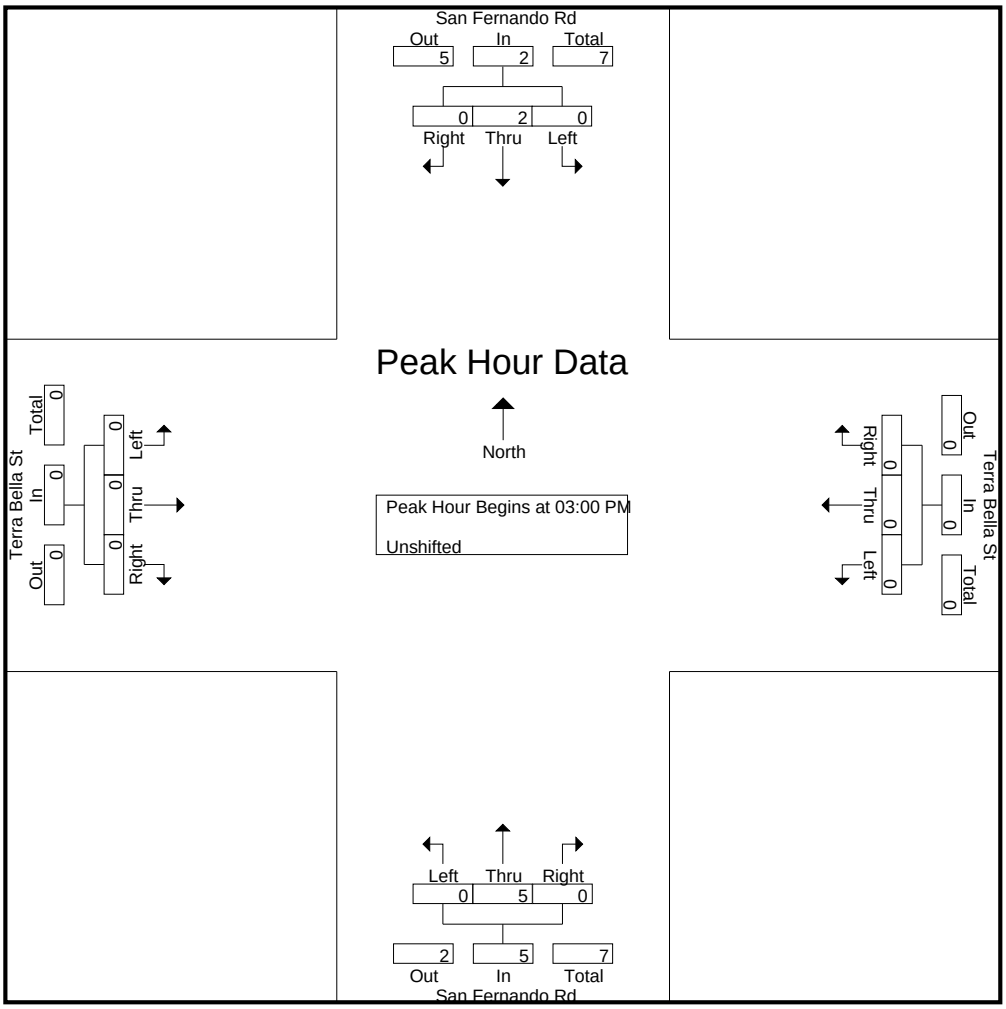

CITY TRAFFIC COUNTERS

626.991.7522

www.ctcounters.com

File Name : SanFernando_Osborne
Site Code : 00000000
Start Date : 3/25/2015
Page No : 1

Groups Printed- Unshifted

	San Fernando Rd Southbound			Osborne St Westbound			San Fernando Rd Northbound			Osborne St Eastbound			
Start Time	Left	Thru	Right	Left	Thru	Right	Left	Thru	Right	Left	Thru	Right	Int. Total
07:00 AM	12	177	10	20	167	23	3	58	7	7	97	14	595
07:15 AM	24	210	7	21	179	27	3	60	21	16	110	9	687
07:30 AM	16	207	12	15	152	24	3	71	13	15	123	8	659
07:45 AM	25	203	13	20	170	20	2	65	18	13	130	6	685
Total	77	797	42	76	668	94	11	254	59	51	460	37	2626
08:00 AM	30	177	15	21	160	25	11	64	10	30	145	6	694
08:15 AM	36	149	12	20	136	19	4	70	13	13	120	8	600
08:30 AM	20	159	8	14	148	23	2	41	8	6	87	11	527
08:45 AM	26	133	3	16	102	21	7	61	11	17	87	7	491
Total	112	618	38	71	546	88	24	236	42	66	439	32	2312
09:00 AM	22	105	7	15	106	22	6	72	13	17	88	7	480
09:15 AM	14	77	9	5	56	18	6	44	7	12	37	2	287
09:30 AM	17	103	3	4	66	12	9	46	1	9	53	5	328
09:45 AM	13	112	9	1	76	24	11	73	11	11	67	9	417
Total	66	397	28	25	304	76	32	235	32	49	245	23	1512
12:00 PM	28	93	18	6	121	28	7	71	12	21	97	4	506
12:15 PM	41	87	17	5	144	27	13	78	5	16	150	18	601
12:30 PM	41	121	11	19	84	23	10	62	12	12	89	11	495
12:45 PM	44	89	7	15	92	19	11	74	8	16	123	10	508
Total	154	390	53	45	441	97	41	285	37	65	459	43	2110
01:00 PM	21	96	14	4	64	23	9	88	5	15	80	8	427
01:15 PM	30	70	19	12	116	20	12	57	14	14	98	7	469
01:30 PM	29	60	12	16	105	19	4	81	9	18	98	9	460
01:45 PM	43	79	13	14	103	18	14	58	8	15	105	11	481
Total	123	305	58	46	388	80	39	284	36	62	381	35	1837
03:00 PM	33	71	6	16	127	25	6	78	13	23	111	12	521
03:15 PM	44	87	20	20	124	36	1	66	11	15	119	19	562
03:30 PM	37	84	15	14	161	37	15	115	19	20	161	11	689
03:45 PM	35	95	16	12	171	23	11	97	15	33	155	15	678
Total	149	337	57	62	583	121	33	356	58	91	546	57	2450
04:00 PM	45	112	14	11	167	44	24	160	19	19	145	8	768
04:15 PM	51	89	15	7	159	27	11	108	16	19	99	6	607
04:30 PM	38	78	16	12	150	37	12	111	9	17	124	10	614
04:45 PM	52	95	20	15	108	28	15	122	9	24	97	7	592
Total	186	374	65	45	584	136	62	501	53	79	465	31	2581
05:00 PM	48	102	10	14	163	27	13	134	8	25	103	7	654
05:15 PM	48	94	19	18	165	33	13	125	19	24	94	6	658
05:30 PM	45	93	6	8	126	35	15	135	19	17	115	13	627
05:45 PM	50	71	19	16	141	31	14	152	22	16	161	8	701
Total	191	360	54	56	595	126	55	546	68	82	473	34	2640
Grand Total	1058	3578	395	426	4109	818	297	2697	385	545	3468	292	18068
Apprch %	21	71.1	7.9	8	76.8	15.3	8.8	79.8	11.4	12.7	80.6	6.8	
Total %	5.9	19.8	2.2	2.4	22.7	4.5	1.6	14.9	2.1	3	19.2	1.6	

CITY TRAFFIC COUNTERS

626.991.7522

www.ctcounters.com

File Name : SanFernando_Osborne
Site Code : 00000000
Start Date : 3/25/2015
Page No : 2

	San Fernando Rd Southbound				Osborne St Westbound				San Fernando Rd Northbound				Osborne St Eastbound				
Start Time	Left	Thru	Right	App. Total	Left	Thru	Right	App. Total	Left	Thru	Right	App. Total	Left	Thru	Right	App. Total	Int. Total
Peak Hour Analysis From 07:00 AM to 09:45 AM - Peak 1 of 1																	
Peak Hour for Entire Intersection Begins at 07:15 AM																	
07:15 AM	24	**210**	7	**241**	**21**	**179**	**27**	**227**	3	60	**21**	84	16	110	**9**	135	687
07:30 AM	16	207	12	235	15	152	24	191	3	**71**	13	**87**	15	123	8	146	659
07:45 AM	25	203	13	241	20	170	20	210	2	65	18	85	13	130	6	149	685
08:00 AM	**30**	177	**15**	222	21	160	25	206	**11**	64	10	85	**30**	**145**	6	**181**	**694**
Total Volume	95	797	47	939	77	661	96	834	19	260	62	341	74	508	29	611	2725
% App. Total	10.1	84.9	5		9.2	79.3	11.5		5.6	76.2	18.2		12.1	83.1	4.7		
PHF	.792	.949	.783	.974	.917	.923	.889	.919	.432	.915	.738	.980	.617	.876	.806	.844	.982

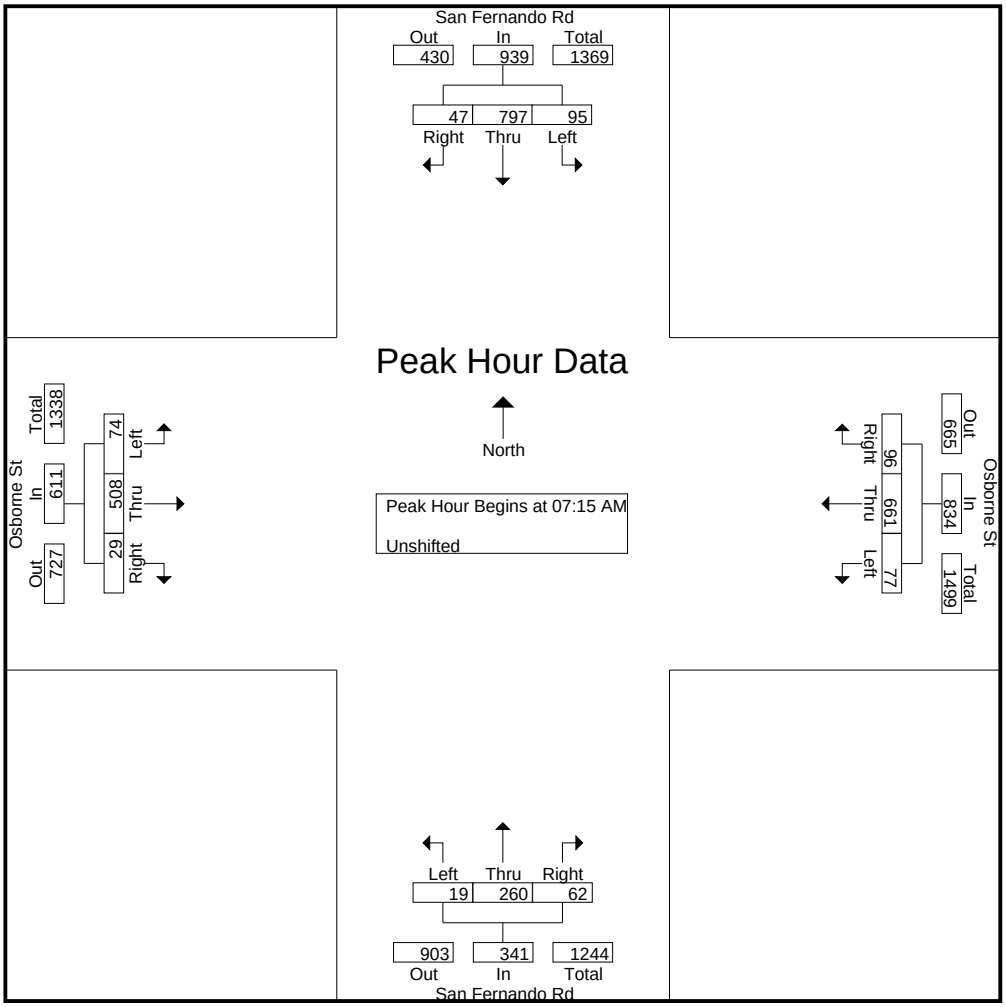

CITY TRAFFIC COUNTERS

626.991.7522

www.ctcounters.com

File Name : SanFernando_Osborne
Site Code : 00000000
Start Date : 3/25/2015
Page No : 3

	San Fernando Rd Southbound				Osborne St Westbound				San Fernando Rd Northbound				Osborne St Eastbound				
Start Time	Left	Thru	Right	App. Total	Left	Thru	Right	App. Total	Left	Thru	Right	App. Total	Left	Thru	Right	App. Total	Int. Total
Peak Hour Analysis From 10:00 AM to 01:45 PM - Peak 1 of 1																	
Peak Hour for Entire Intersection Begins at 12:00 PM																	
12:00 PM	28	93	**18**	139	6	121	**28**	155	7	71	**12**	90	**21**	97	4	122	506
12:15 PM	41	87	17	145	5	**144**	27	**176**	**13**	**78**	5	**96**	16	**150**	**18**	**184**	**601**
12:30 PM	41	**121**	11	**173**	**19**	84	23	126	10	62	12	84	12	89	11	112	495
12:45 PM	**44**	89	7	140	15	92	19	126	11	74	8	93	16	123	10	149	508
Total Volume	154	390	53	597	45	441	97	583	41	285	37	363	65	459	43	567	2110
% App. Total	25.8	65.3	8.9		7.7	75.6	16.6		11.3	78.5	10.2		11.5	81	7.6		
PHF	.875	.806	.736	.863	.592	.766	.866	.828	.788	.913	.771	.945	.774	.765	.597	.770	.878

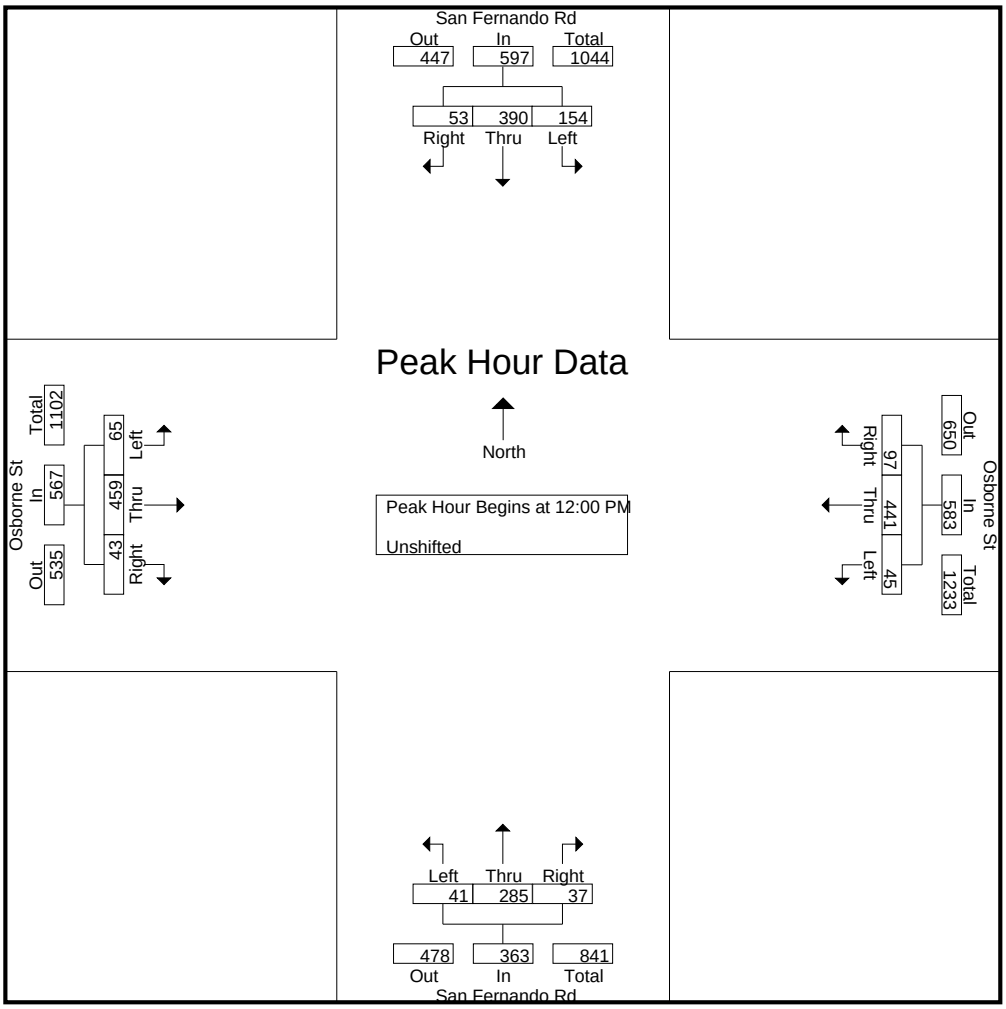

CITY TRAFFIC COUNTERS

626.991.7522

www.ctcounters.com

File Name : SanFernando_Osborne
Site Code : 00000000
Start Date : 3/25/2015
Page No : 4

	San Fernando Rd Southbound				Osborne St Westbound				San Fernando Rd Northbound				Osborne St Eastbound				
Start Time	Left	Thru	Right	App. Total	Left	Thru	Right	App. Total	Left	Thru	Right	App. Total	Left	Thru	Right	App. Total	Int. Total
Peak Hour Analysis From 02:00 PM to 05:45 PM - Peak 1 of 1																	
Peak Hour for Entire Intersection Begins at 03:30 PM																	
03:30 PM	37	84	15	136	**14**	161	37	212	15	115	**19**	149	20	**161**	11	192	689
03:45 PM	35	95	**16**	146	12	**171**	23	206	11	97	15	123	**33**	155	**15**	**203**	678
04:00 PM	45	**112**	14	**171**	11	167	**44**	**222**	**24**	**160**	19	**203**	19	145	8	172	**768**
04:15 PM	**51**	89	15	155	7	159	27	193	11	108	16	135	19	99	6	124	607
Total Volume	168	380	60	608	44	658	131	833	61	480	69	610	91	560	40	691	2742
% App. Total	27.6	62.5	9.9		5.3	79	15.7		10	78.7	11.3		13.2	81	5.8		
PHF	.824	.848	.938	.889	.786	.962	.744	.938	.635	.750	.908	.751	.689	.870	.667	.851	.893

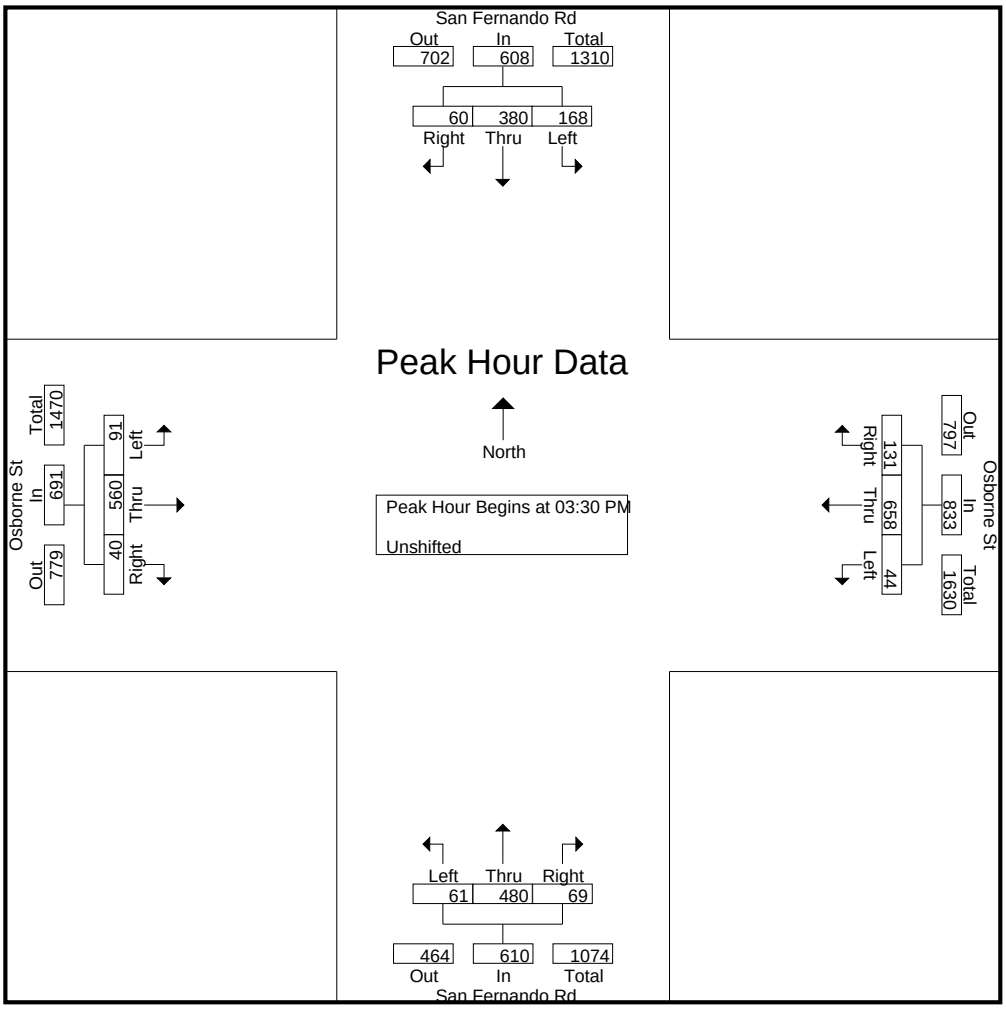

CITY TRAFFIC COUNTERS

626.991.7522

www.ctcounters.com

File Name : SanFernando_Osborne_Motorcycles
Site Code : 00000000
Start Date : 3/25/2015
Page No : 1

Groups Printed- Bank 2

	San Fernando Rd Southbound			Osborne St Westbound			San Fernando Rd Northbound			Osborne St Eastbound			
Start Time	Left	Thru	Right	Left	Thru	Right	Left	Thru	Right	Left	Thru	Right	Int. Total
07:00 AM	0	0	0	0	0	0	0	1	0	0	0	1	2
07:30 AM	0	0	0	0	1	0	0	0	0	1	1	0	3
07:45 AM	0	2	0	0	1	0	0	0	0	0	0	0	3
Total	0	2	0	0	2	0	0	1	0	1	1	1	8
08:00 AM	1	0	0	0	0	0	0	0	0	0	1	0	2
08:30 AM	0	1	0	0	0	0	0	0	0	0	0	0	1
Total	1	1	0	0	0	0	0	0	0	0	1	0	3
09:00 AM	0	0	0	0	0	0	0	0	0	0	1	0	1
09:15 AM	0	1	0	0	0	0	0	0	0	0	0	0	1
Total	0	1	0	0	0	0	0	0	0	0	1	0	2
12:00 PM	0	0	0	0	0	0	0	0	0	0	1	0	1
12:15 PM	0	0	0	0	0	0	0	1	0	0	0	0	1
12:30 PM	0	1	0	0	0	0	0	0	0	0	0	0	1
12:45 PM	0	1	0	0	0	0	0	1	0	0	0	0	2
Total	0	2	0	0	0	0	0	2	0	0	1	0	5
01:00 PM	1	0	0	0	0	0	1	0	0	0	0	0	2
01:30 PM	1	0	0	0	1	0	0	0	0	0	0	0	2
Total	2	0	0	0	1	0	1	0	0	0	0	0	4
03:00 PM	0	0	0	0	1	1	0	1	0	0	0	0	3
03:15 PM	1	0	0	0	0	0	1	1	1	0	0	0	4
03:30 PM	0	0	0	0	0	0	0	1	0	0	0	0	1
03:45 PM	0	1	0	0	0	0	0	0	0	0	0	0	1
Total	1	1	0	0	1	1	1	3	1	0	0	0	9
04:00 PM	1	1	0	0	0	0	0	0	0	0	0	0	2
04:15 PM	0	0	1	0	0	0	0	0	0	0	1	0	2
04:30 PM	0	1	0	0	0	0	0	0	0	0	1	0	2
04:45 PM	0	3	0	0	1	0	0	1	0	0	2	0	7
Total	1	5	1	0	1	0	0	1	0	0	4	0	13
05:00 PM	0	0	0	0	0	0	0	1	0	0	1	0	2
05:15 PM	0	1	0	0	0	0	0	1	0	0	1	0	3
05:45 PM	0	0	0	0	2	0	0	0	0	0	0	0	2
Total	0	1	0	0	2	0	0	2	0	0	2	0	7
Grand Total	5	13	1	0	7	1	2	9	1	1	10	1	51
Apprch %	26.3	68.4	5.3	0	87.5	12.5	16.7	75	8.3	8.3	83.3	8.3	
Total %	9.8	25.5	2	0	13.7	2	3.9	17.6	2	2	19.6	2	

CITY TRAFFIC COUNTERS

626.991.7522

www.ctcounters.com

File Name : SanFernando_Osborne_Motorcycles
Site Code : 00000000
Start Date : 3/25/2015
Page No : 2

	San Fernando Rd Southbound				Osborne St Westbound				San Fernando Rd Northbound				Osborne St Eastbound				
Start Time	Left	Thru	Right	App. Total	Left	Thru	Right	App. Total	Left	Thru	Right	App. Total	Left	Thru	Right	App. Total	Int. Total
Peak Hour Analysis From 07:00 AM to 09:45 AM - Peak 1 of 1																	
Peak Hour for Entire Intersection Begins at 07:00 AM																	
07:00 AM	0	0	0	0	0	0	0	0	0	**1**	0	**1**	0	0	**1**	1	2
07:15 AM	0	0	0	0	0	0	0	0	0	0	0	0	0	0	0	0	0
07:30 AM	0	0	0	0	0	**1**	0	**1**	0	0	0	0	**1**	**1**	0	**2**	**3**
07:45 AM	0	**2**	0	**2**	0	1	0	1	0	0	0	0	0	0	0	0	3
Total Volume	0	2	0	2	0	2	0	2	0	1	0	1	1	1	1	3	8
% App. Total	0	100	0		0	100	0		0	100	0		33.3	33.3	33.3		
PHF	.000	.250	.000	.250	.000	.500	.000	.500	.000	.250	.000	.250	.250	.250	.250	.375	.667

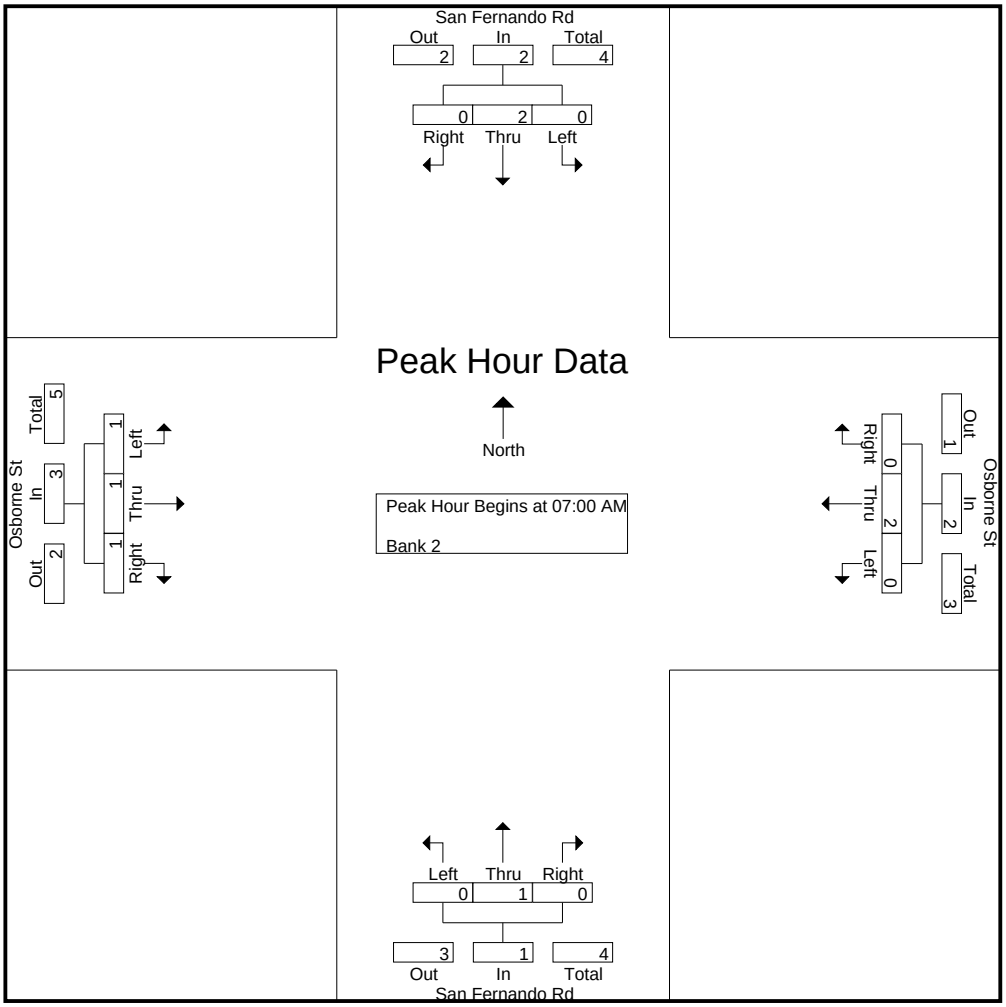

CITY TRAFFIC COUNTERS

626.991.7522

www.ctcounters.com

File Name : SanFernando_Osborne_Motorcycles
Site Code : 00000000
Start Date : 3/25/2015
Page No : 3

	San Fernando Rd Southbound				Osborne St Westbound				San Fernando Rd Northbound				Osborne St Eastbound				
Start Time	Left	Thru	Right	App. Total	Left	Thru	Right	App. Total	Left	Thru	Right	App. Total	Left	Thru	Right	App. Total	Int. Total
Peak Hour Analysis From 10:00 AM to 01:45 PM - Peak 1 of 1																	
Peak Hour for Entire Intersection Begins at 12:15 PM																	
12:15 PM	0	0	0	0	0	0	0	0	0	**1**	0	**1**	0	0	0	0	1
12:30 PM	0	**1**	0	**1**	0	0	0	0	0	0	0	0	0	0	0	0	1
12:45 PM	0	1	0	1	0	0	0	0	0	1	0	1	0	0	0	0	**2**
01:00 PM	**1**	0	0	1	0	0	0	0	**1**	0	0	1	0	0	0	0	2
Total Volume	1	2	0	3	0	0	0	0	1	2	0	3	0	0	0	0	6
% App. Total	33.3	66.7	0		0	0	0		33.3	66.7	0		0	0	0		
PHF	.250	.500	.000	.750	.000	.000	.000	.000	.250	.500	.000	.750	.000	.000	.000	.000	.750

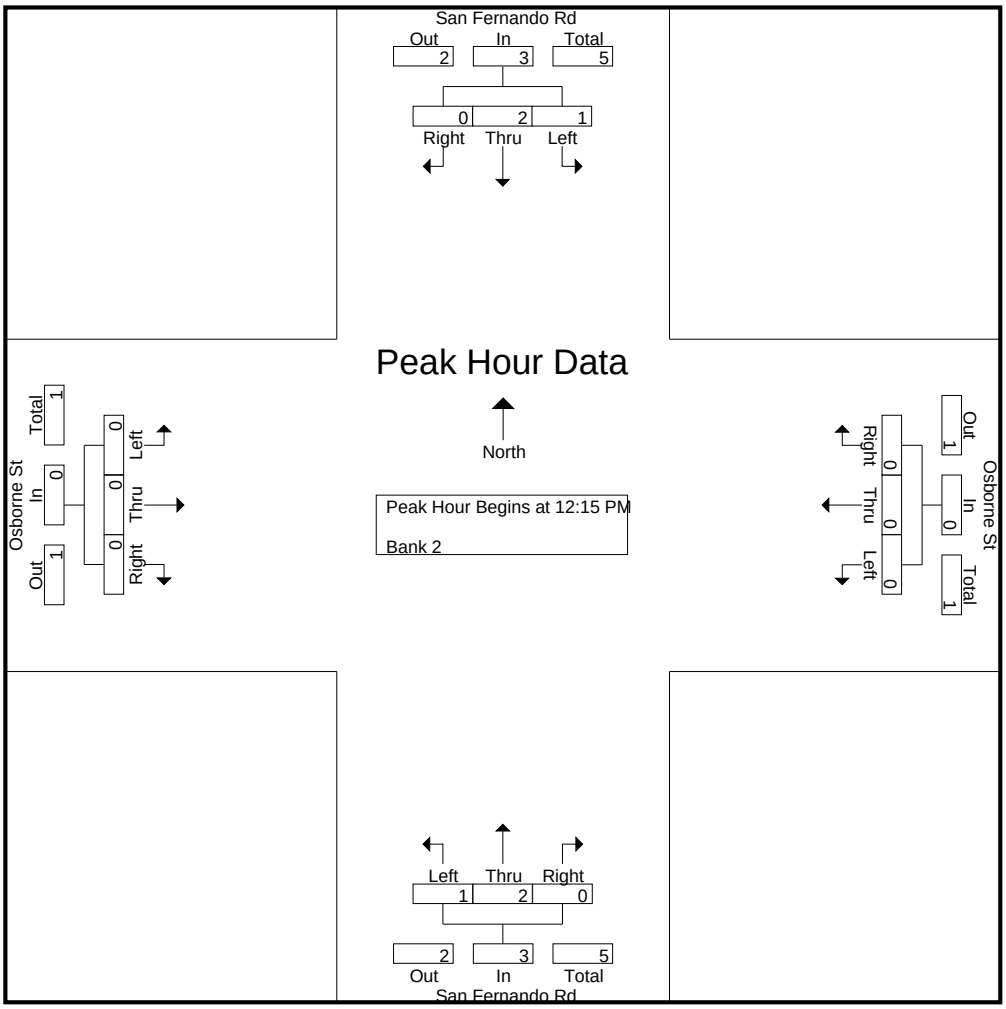

CITY TRAFFIC COUNTERS

626.991.7522

www.ctcounters.com

File Name : SanFernando_Osborne_Motorcycles
Site Code : 00000000
Start Date : 3/25/2015
Page No : 4

	San Fernando Rd Southbound				Osborne St Westbound				San Fernando Rd Northbound				Osborne St Eastbound				
Start Time	Left	Thru	Right	App. Total	Left	Thru	Right	App. Total	Left	Thru	Right	App. Total	Left	Thru	Right	App. Total	Int. Total
Peak Hour Analysis From 02:00 PM to 05:45 PM - Peak 1 of 1																	
Peak Hour for Entire Intersection Begins at 04:30 PM																	
04:30 PM	0	1	0	1	0	0	0	0	0	0	0	0	0	1	0	1	2
04:45 PM	0	**3**	0	**3**	0	**1**	0	**1**	0	**1**	0	**1**	0	**2**	0	**2**	**7**
05:00 PM	0	0	0	0	0	0	0	0	0	1	0	1	0	1	0	1	2
05:15 PM	0	1	0	1	0	0	0	0	0	1	0	1	0	1	0	1	3
Total Volume	0	5	0	5	0	1	0	1	0	3	0	3	0	5	0	5	14
% App. Total	0	100	0		0	100	0		0	100	0		0	100	0		
PHF	.000	.417	.000	.417	.000	.250	.000	.250	.000	.750	.000	.750	.000	.625	.000	.625	.500

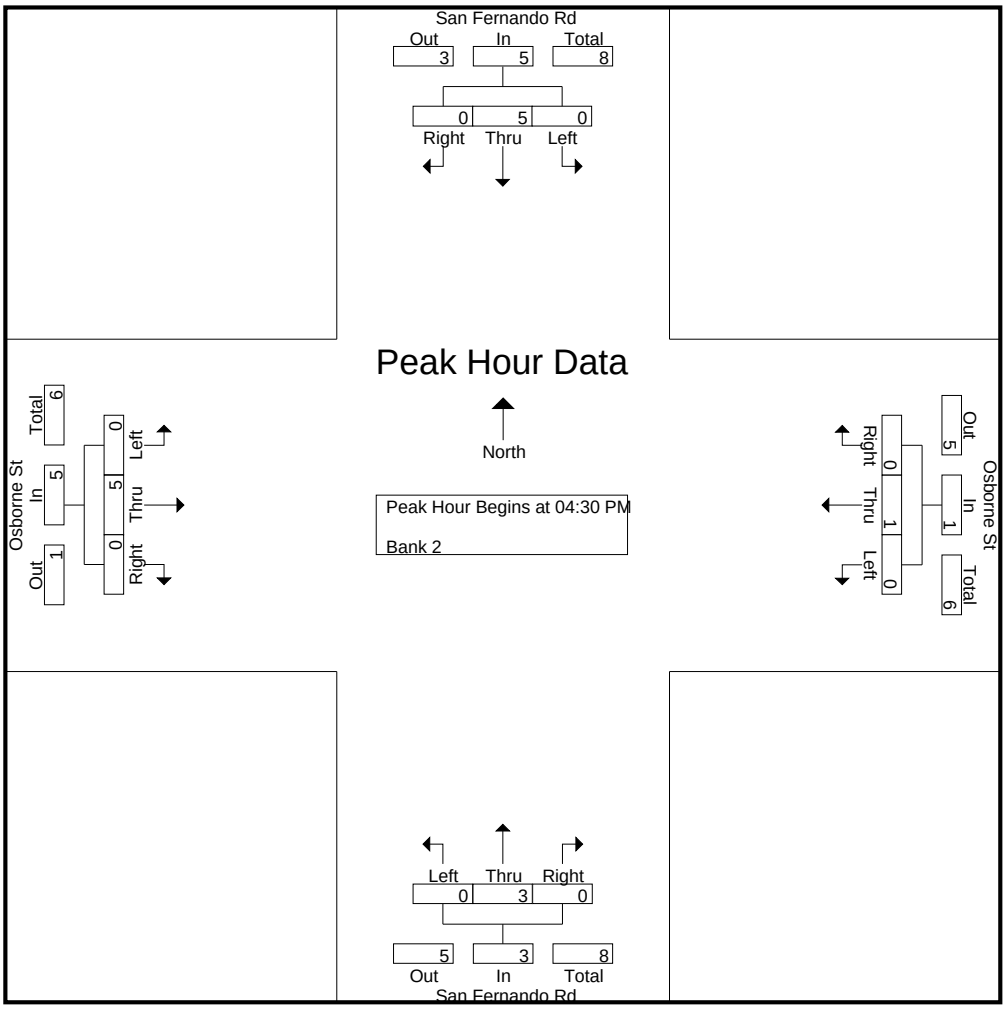

CITY TRAFFIC COUNTERS

626.991.7522

www.ctcounters.com

File Name : SanFernando_Osborne_Buses
Site Code : 00000000
Start Date : 3/25/2015
Page No : 1

Groups Printed- Bank 1

	San Fernando Rd Southbound			Osborne St Westbound			San Fernando Rd Northbound			Osborne St Eastbound			
Start Time	Left	Thru	Right	Left	Thru	Right	Left	Thru	Right	Left	Thru	Right	Int. Total
07:00 AM	1	1	0	0	4	0	1	1	0	0	1	0	9
07:15 AM	1	1	0	0	4	0	0	2	0	0	1	0	9
07:30 AM	0	1	1	0	3	0	0	1	0	0	1	0	7
07:45 AM	0	2	0	0	2	0	0	2	0	0	0	0	6
Total	2	5	1	0	13	0	1	6	0	0	3	0	31
08:00 AM	1	2	0	0	1	0	0	1	1	0	3	0	9
08:15 AM	0	1	0	0	1	0	0	2	0	0	4	2	10
08:30 AM	0	2	0	0	2	0	0	2	0	0	0	0	6
08:45 AM	1	1	0	0	0	0	1	3	0	0	0	0	6
Total	2	6	0	0	4	0	1	8	1	0	7	2	31
09:00 AM	0	1	0	0	1	1	0	2	0	0	0	0	5
09:15 AM	0	0	0	0	2	0	0	2	1	0	2	0	7
09:30 AM	0	1	0	0	0	0	0	0	1	0	0	0	2
09:45 AM	0	1	0	0	1	0	0	1	0	0	1	0	4
Total	0	3	0	0	4	1	0	5	2	0	3	0	18
12:00 PM	0	1	0	0	0	0	0	0	1	0	1	0	3
12:15 PM	0	3	0	0	1	0	0	2	0	0	1	0	7
12:30 PM	0	0	0	0	1	0	0	0	0	0	1	0	2
12:45 PM	1	1	0	0	0	0	0	0	0	0	1	0	3
Total	1	5	0	0	2	0	0	2	1	0	4	0	15
01:00 PM	0	0	0	0	2	0	0	2	0	0	1	0	5
01:15 PM	0	1	0	0	1	0	0	0	0	0	1	0	3
01:30 PM	0	2	0	0	0	0	0	1	0	0	3	0	6
01:45 PM	0	1	0	0	2	0	0	1	0	0	0	0	4
Total	0	4	0	0	5	0	0	4	0	0	5	0	18
03:00 PM	0	1	0	0	1	0	0	1	0	0	4	0	7
03:15 PM	0	2	0	0	2	0	0	1	0	0	1	0	6
03:30 PM	0	2	0	0	2	0	0	2	0	0	4	0	10
03:45 PM	1	2	0	0	3	0	1	0	0	0	7	0	14
Total	1	7	0	0	8	0	1	4	0	0	16	0	37
04:00 PM	0	2	0	0	2	0	0	0	0	0	1	0	5
04:15 PM	0	2	0	0	1	0	0	3	1	1	3	0	11
04:30 PM	0	2	0	0	3	2	0	1	0	0	1	0	9
04:45 PM	0	0	0	0	1	0	0	1	0	0	4	0	6
Total	0	6	0	0	7	2	0	5	1	1	9	0	31
05:00 PM	0	2	0	0	1	0	0	3	0	0	1	0	7
05:15 PM	0	0	0	0	2	0	0	1	0	0	1	0	4
05:30 PM	0	1	0	0	1	0	0	2	0	0	2	0	6
05:45 PM	0	1	0	0	1	0	0	1	0	0	1	0	4
Total	0	4	0	0	5	0	0	7	0	0	5	0	21
Grand Total	6	40	1	0	48	3	3	41	5	1	52	2	202
Apprch %	12.8	85.1	2.1	0	94.1	5.9	6.1	83.7	10.2	1.8	94.5	3.6	
Total %	3	19.8	0.5	0	23.8	1.5	1.5	20.3	2.5	0.5	25.7	1	

CITY TRAFFIC COUNTERS

626.991.7522

www.ctcounters.com

File Name : SanFernando_Osborne_Buses
Site Code : 00000000
Start Date : 3/25/2015
Page No : 2

	San Fernando Rd Southbound				Osborne St Westbound				San Fernando Rd Northbound				Osborne St Eastbound				
Start Time	Left	Thru	Right	App. Total	Left	Thru	Right	App. Total	Left	Thru	Right	App. Total	Left	Thru	Right	App. Total	Int. Total
Peak Hour Analysis From 07:00 AM to 09:45 AM - Peak 1 of 1																	
Peak Hour for Entire Intersection Begins at 07:30 AM																	
07:30 AM	0	1	**1**	2	0	**3**	0	**3**	0	1	0	1	0	1	0	1	7
07:45 AM	0	**2**	0	2	0	2	0	2	0	**2**	0	**2**	0	0	0	0	6
08:00 AM	**1**	2	0	**3**	0	1	0	1	0	1	**1**	2	0	3	0	3	9
08:15 AM	0	1	0	1	0	1	0	1	0	2	0	2	0	**4**	**2**	**6**	**10**
Total Volume	1	6	1	8	0	7	0	7	0	6	1	7	0	8	2	10	32
% App. Total	12.5	75	12.5		0	100	0		0	85.7	14.3		0	80	20		
PHF	.250	.750	.250	.667	.000	.583	.000	.583	.000	.750	.250	.875	.000	.500	.250	.417	.800

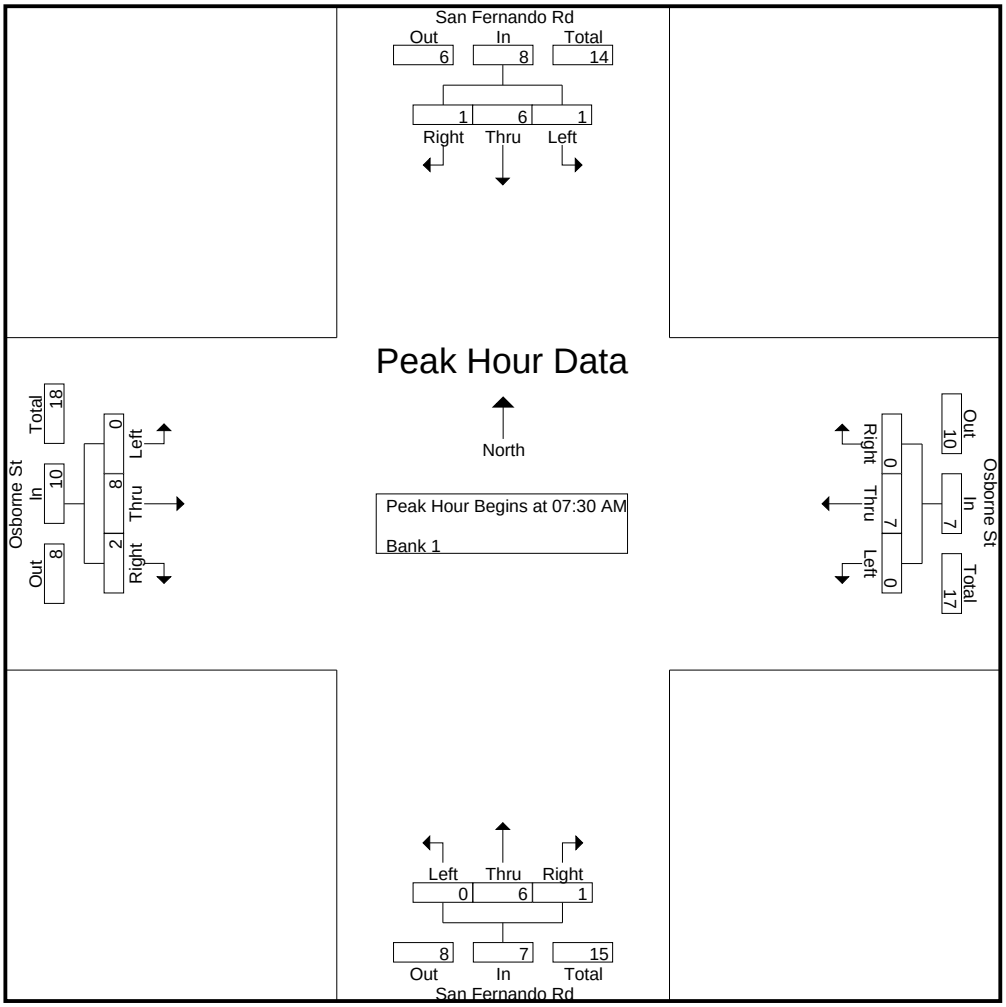

CITY TRAFFIC COUNTERS

626.991.7522

www.ctcounters.com

File Name : SanFernando_Osborne_Buses
Site Code : 00000000
Start Date : 3/25/2015
Page No : 3

	San Fernando Rd Southbound				Osborne St Westbound				San Fernando Rd Northbound				Osborne St Eastbound				
Start Time	Left	Thru	Right	App. Total	Left	Thru	Right	App. Total	Left	Thru	Right	App. Total	Left	Thru	Right	App. Total	Int. Total
Peak Hour Analysis From 10:00 AM to 01:45 PM - Peak 1 of 1																	
Peak Hour for Entire Intersection Begins at 01:00 PM																	
01:00 PM	0	0	0	0	0	**2**	0	**2**	0	**2**	0	**2**	0	1	0	1	5
01:15 PM	0	1	0	1	0	1	0	1	0	0	0	0	0	1	0	1	3
01:30 PM	0	**2**	0	**2**	0	0	0	0	0	1	0	1	0	**3**	0	**3**	**6**
01:45 PM	0	1	0	1	0	2	0	2	0	1	0	1	0	0	0	0	4
Total Volume	0	4	0	4	0	5	0	5	0	4	0	4	0	5	0	5	18
% App. Total	0	100	0		0	100	0		0	100	0		0	100	0		
PHF	.000	.500	.000	.500	.000	.625	.000	.625	.000	.500	.000	.500	.000	.417	.000	.417	.750

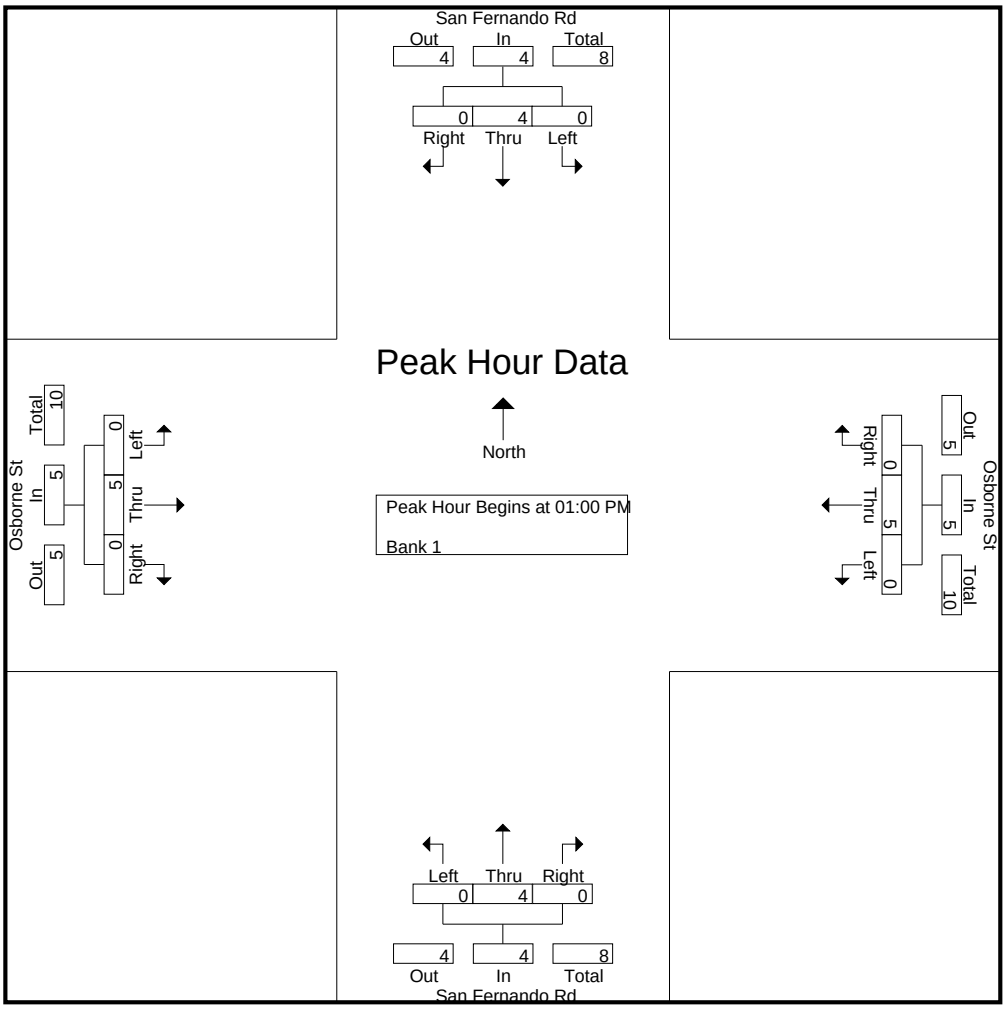

CITY TRAFFIC COUNTERS

626.991.7522

www.ctcounters.com

File Name : SanFernando_Osborne_Buses
Site Code : 00000000
Start Date : 3/25/2015
Page No : 4

	San Fernando Rd Southbound				Osborne St Westbound				San Fernando Rd Northbound				Osborne St Eastbound				
Start Time	Left	Thru	Right	App. Total	Left	Thru	Right	App. Total	Left	Thru	Right	App. Total	Left	Thru	Right	App. Total	Int. Total
Peak Hour Analysis From 02:00 PM to 05:45 PM - Peak 1 of 1																	
Peak Hour for Entire Intersection Begins at 03:30 PM																	
03:30 PM	0	**2**	0	2	0	2	0	2	0	2	0	2	0	4	0	4	10
03:45 PM	**1**	2	0	**3**	0	**3**	0	**3**	**1**	0	0	1	0	**7**	0	**7**	**14**
04:00 PM	0	2	0	2	0	2	0	2	0	0	0	0	0	1	0	1	5
04:15 PM	0	2	0	2	0	1	0	1	0	**3**	**1**	**4**	**1**	3	0	4	11
Total Volume	1	8	0	9	0	8	0	8	1	5	1	7	1	15	0	16	40
% App. Total	11.1	88.9	0		0	100	0		14.3	71.4	14.3		6.2	93.8	0		
PHF	.250	1.00	.000	.750	.000	.667	.000	.667	.250	.417	.250	.438	.250	.536	.000	.571	.714

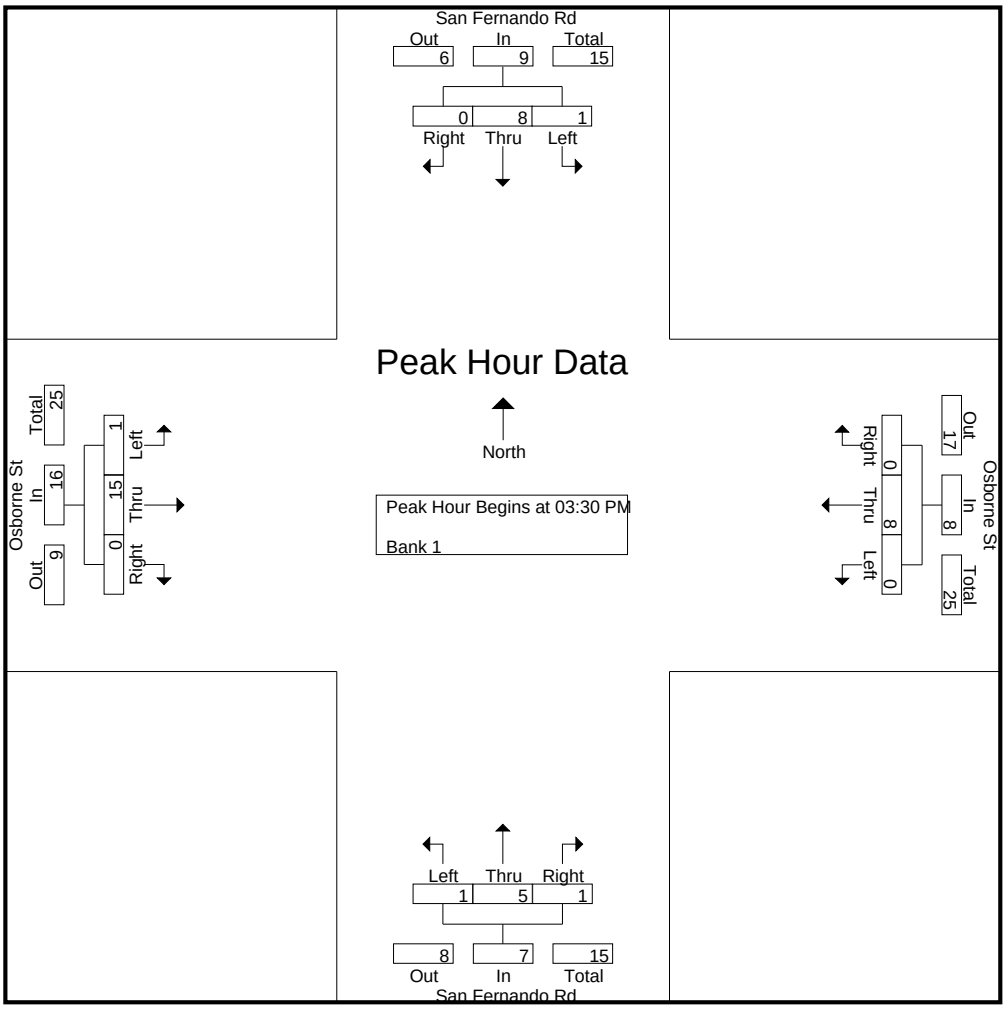

CITY TRAFFIC COUNTERS

626.991.7522

www.ctcounters.com

File Name : sanfernando_osborne_2axle
Site Code : 00000000
Start Date : 3/25/2015
Page No : 1

Groups Printed- Unshifted

	San Fernando Rd Southbound			Osborne St Westbound			San Fernando Rd Northbound			Osborne St Eastbound			
Start Time	Left	Thru	Right	Left	Thru	Right	Left	Thru	Right	Left	Thru	Right	Int. Total
07:00 AM	1	6	1	1	3	1	0	3	0	1	1	0	18
07:15 AM	0	6	0	0	2	0	1	3	0	0	2	1	15
07:30 AM	0	5	1	0	1	0	0	3	0	0	2	0	12
07:45 AM	0	5	0	0	1	0	1	2	1	0	0	0	10
Total	1	22	2	1	7	1	2	11	1	1	5	1	55
08:00 AM	0	6	1	0	1	1	0	2	0	0	0	0	11
08:15 AM	0	6	0	0	2	0	2	2	0	0	1	1	14
08:30 AM	1	4	0	1	1	1	0	3	1	0	1	0	13
08:45 AM	0	3	0	0	1	0	0	6	0	0	1	0	11
Total	1	19	1	1	5	2	2	13	1	0	3	1	49
09:00 AM	0	5	0	0	3	0	0	3	0	0	2	0	13
09:15 AM	0	6	1	0	4	0	0	8	0	0	2	0	21
09:30 AM	0	7	0	0	0	0	1	4	1	0	0	1	14
09:45 AM	0	5	1	1	1	0	0	5	0	0	1	0	14
Total	0	23	2	1	8	0	1	20	1	0	5	1	62
12:00 PM	1	2	0	0	0	1	0	4	0	1	0	1	10
12:15 PM	0	6	1	0	0	0	0	7	0	0	0	0	14
12:30 PM	1	6	0	1	1	1	0	6	0	0	0	0	16
12:45 PM	2	6	1	0	0	0	1	6	0	0	2	1	19
Total	4	20	2	1	1	2	1	23	0	1	2	2	59
01:00 PM	1	7	0	0	1	0	1	2	0	0	4	0	16
01:15 PM	2	4	1	0	3	1	1	2	0	0	0	1	15
01:30 PM	1	4	1	0	0	1	0	6	0	1	2	0	16
01:45 PM	1	6	1	0	2	1	4	4	0	2	2	0	23
Total	5	21	3	0	6	3	6	14	0	3	8	1	70
03:00 PM	0	3	0	0	3	1	0	2	0	1	2	2	14
03:15 PM	0	6	1	0	0	0	3	3	0	0	2	0	15
03:30 PM	1	7	1	1	2	1	1	6	0	0	2	0	22
03:45 PM	1	4	0	0	1	0	0	4	0	1	1	0	12
Total	2	20	2	1	6	2	4	15	0	2	7	2	63
04:00 PM	0	4	0	0	0	0	0	6	0	1	2	0	13
04:15 PM	0	3	1	0	0	1	0	5	0	1	0	0	11
04:30 PM	1	2	1	0	1	1	3	0	1	0	0	0	10
04:45 PM	1	6	1	0	0	1	1	6	1	1	1	0	19
Total	2	15	3	0	1	3	4	17	2	3	3	0	53
05:00 PM	0	1	1	0	0	0	0	1	0	0	1	1	5
05:15 PM	0	4	0	0	1	1	0	0	0	0	0	0	6
05:30 PM	0	2	0	0	1	0	0	3	0	0	0	0	6
05:45 PM	0	2	1	0	2	0	0	6	0	1	3	1	16
Total	0	9	2	0	4	1	0	10	0	1	4	2	33
Grand Total	15	149	17	5	38	14	20	123	5	11	37	10	444
Apprch %	8.3	82.3	9.4	8.8	66.7	24.6	13.5	83.1	3.4	19	63.8	17.2	
Total %	3.4	33.6	3.8	1.1	8.6	3.2	4.5	27.7	1.1	2.5	8.3	2.3	

CITY TRAFFIC COUNTERS

626.991.7522

www.ctcounters.com

File Name : sanfernando_osborne_2axle
Site Code : 00000000
Start Date : 3/25/2015
Page No : 2

	San Fernando Rd Southbound				Osborne St Westbound				San Fernando Rd Northbound				Osborne St Eastbound				
Start Time	Left	Thru	Right	App. Total	Left	Thru	Right	App. Total	Left	Thru	Right	App. Total	Left	Thru	Right	App. Total	Int. Total
Peak Hour Analysis From 07:00 AM to 09:45 AM - Peak 1 of 1																	
Peak Hour for Entire Intersection Begins at 09:00 AM																	
09:00 AM	0	5	0	5	0	3	0	3	0	3	0	3	0	**2**	0	**2**	13
09:15 AM	0	6	**1**	**7**	0	**4**	0	**4**	0	**8**	0	**8**	0	2	0	2	**21**
09:30 AM	0	**7**	0	7	0	0	0	0	**1**	4	**1**	6	0	0	**1**	1	14
09:45 AM	0	5	1	6	**1**	1	0	2	0	5	0	5	0	1	0	1	14
Total Volume	0	23	2	25	1	8	0	9	1	20	1	22	0	5	1	6	62
% App. Total	0	92	8		11.1	88.9	0		4.5	90.9	4.5		0	83.3	16.7		
PHF	.000	.821	.500	.893	.250	.500	.000	.563	.250	.625	.250	.688	.000	.625	.250	.750	.738

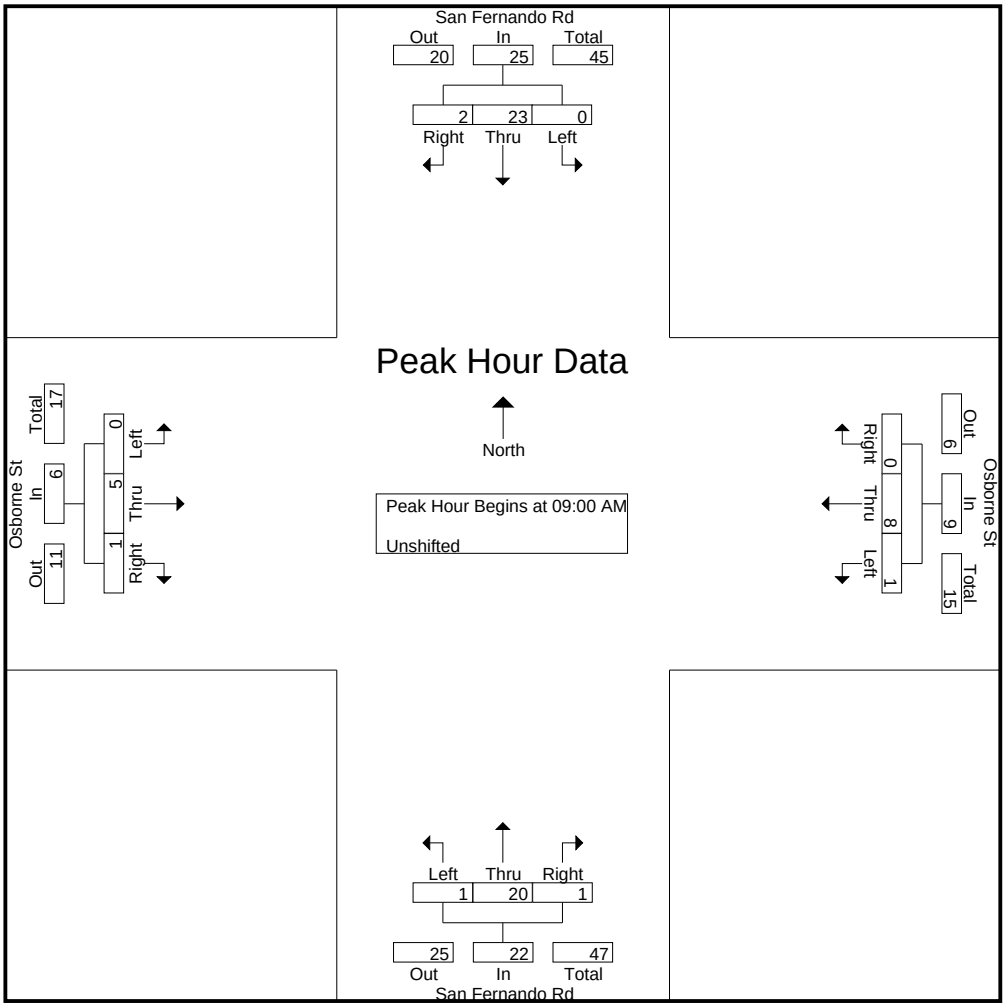

CITY TRAFFIC COUNTERS

626.991.7522

www.ctcounters.com

File Name : sanfernando_osborne_2axle
Site Code : 00000000
Start Date : 3/25/2015
Page No : 3

	San Fernando Rd Southbound				Osborne St Westbound				San Fernando Rd Northbound				Osborne St Eastbound				
Start Time	Left	Thru	Right	App. Total	Left	Thru	Right	App. Total	Left	Thru	Right	App. Total	Left	Thru	Right	App. Total	Int. Total
Peak Hour Analysis From 10:00 AM to 01:45 PM - Peak 1 of 1																	
Peak Hour for Entire Intersection Begins at 01:00 PM																	
01:00 PM	1	**7**	0	**8**	0	1	0	1	1	2	0	3	0	**4**	0	**4**	16
01:15 PM	**2**	4	**1**	7	0	**3**	**1**	**4**	1	2	0	3	0	0	**1**	1	15
01:30 PM	1	4	1	6	0	0	1	1	0	**6**	0	6	1	2	0	3	16
01:45 PM	1	6	1	8	0	2	1	3	**4**	4	0	**8**	**2**	2	0	4	**23**
Total Volume	5	21	3	29	0	6	3	9	6	14	0	20	3	8	1	12	70
% App. Total	17.2	72.4	10.3		0	66.7	33.3		30	70	0		25	66.7	8.3		
PHF	.625	.750	.750	.906	.000	.500	.750	.563	.375	.583	.000	.625	.375	.500	.250	.750	.761

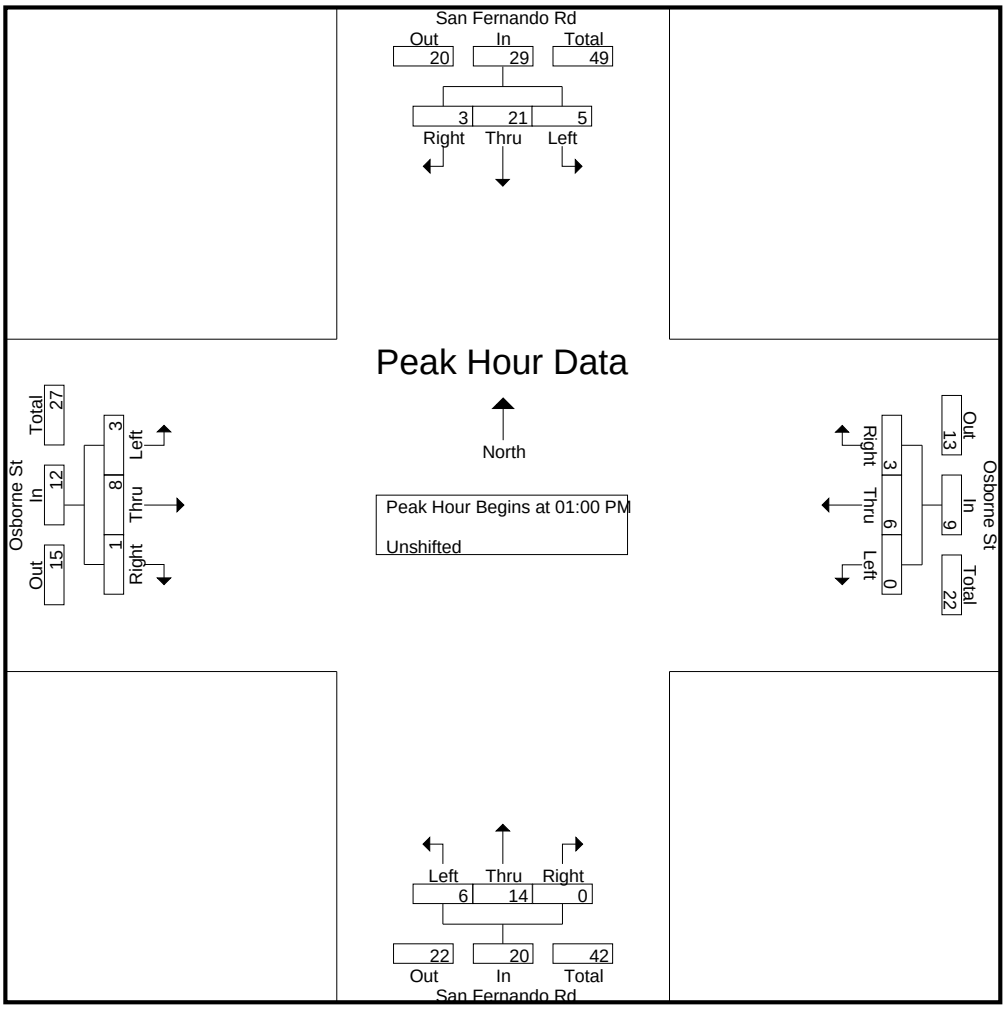

CITY TRAFFIC COUNTERS

626.991.7522

www.ctcounters.com

File Name : sanfernando_osborne_2axle
Site Code : 00000000
Start Date : 3/25/2015
Page No : 4

	San Fernando Rd Southbound				Osborne St Westbound				San Fernando Rd Northbound				Osborne St Eastbound				
Start Time	Left	Thru	Right	App. Total	Left	Thru	Right	App. Total	Left	Thru	Right	App. Total	Left	Thru	Right	App. Total	Int. Total
Peak Hour Analysis From 02:00 PM to 05:45 PM - Peak 1 of 1																	
Peak Hour for Entire Intersection Begins at 03:00 PM																	
03:00 PM	0	3	0	3	0	**3**	**1**	**4**	0	2	0	2	**1**	**2**	**2**	**5**	14
03:15 PM	0	6	**1**	7	0	0	0	0	**3**	3	0	6	0	2	0	2	15
03:30 PM	**1**	**7**	1	**9**	**1**	2	1	4	1	**6**	0	**7**	0	2	0	2	**22**
03:45 PM	1	4	0	5	0	1	0	1	0	4	0	4	1	1	0	2	12
Total Volume	2	20	2	24	1	6	2	9	4	15	0	19	2	7	2	11	63
% App. Total	8.3	83.3	8.3		11.1	66.7	22.2		21.1	78.9	0		18.2	63.6	18.2		
PHF	.500	.714	.500	.667	.250	.500	.500	.563	.333	.625	.000	.679	.500	.875	.250	.550	.716

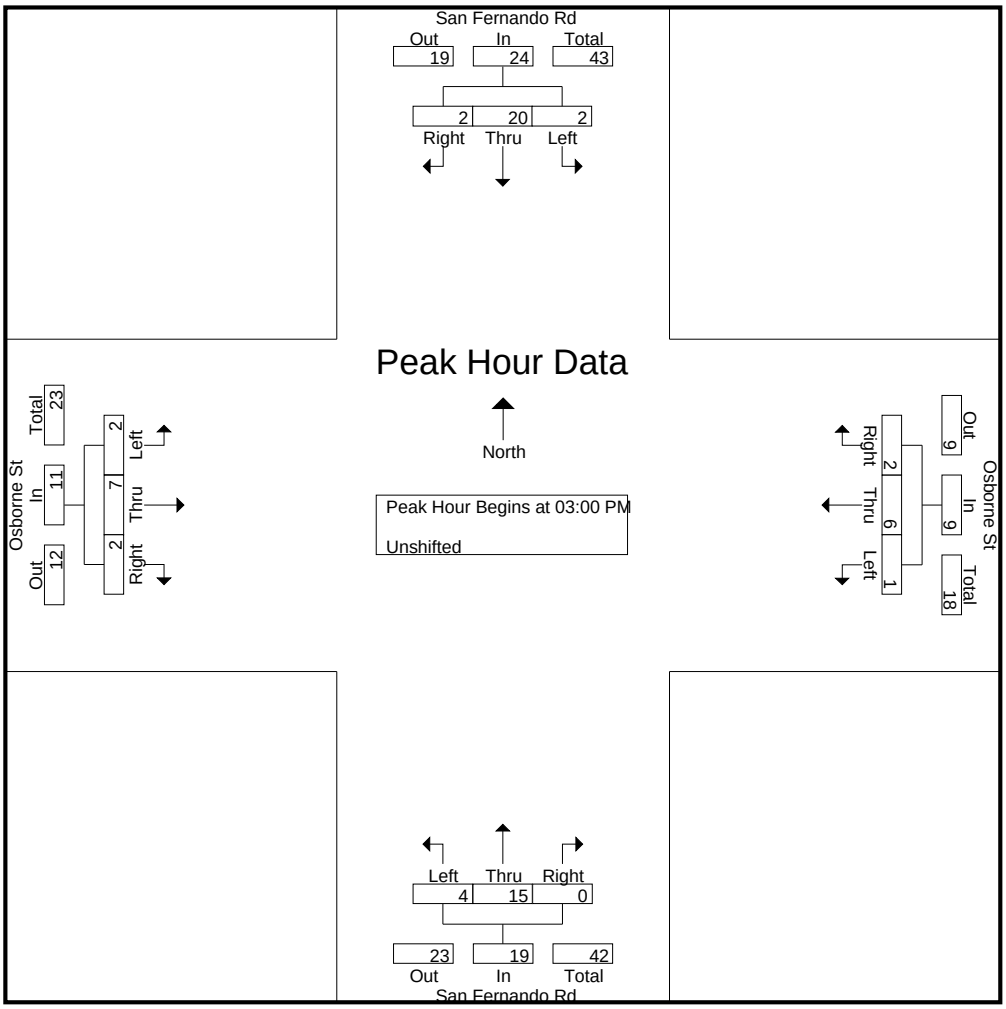

CITY TRAFFIC COUNTERS

626.991.7522

www.ctcounters.com

File Name : sanfernando_osborne_3axle
Site Code : 00000000
Start Date : 3/25/2015
Page No : 1

Groups Printed- Bank 1

	San Fernando Rd Southbound			Osborne St Westbound			San Fernando Rd Northbound			Osborne St Eastbound			
Start Time	Left	Thru	Right	Left	Thru	Right	Left	Thru	Right	Left	Thru	Right	Int. Total
07:00 AM	0	4	1	1	1	0	1	1	0	1	0	0	10
07:15 AM	0	0	1	0	2	0	2	0	0	0	0	0	5
07:30 AM	0	1	1	0	2	0	0	1	0	0	2	0	7
07:45 AM	0	1	0	1	2	0	0	0	0	0	0	0	4
Total	0	6	3	2	7	0	3	2	0	1	2	0	26
08:00 AM	0	2	0	0	1	0	0	0	0	0	1	0	4
08:15 AM	0	1	0	0	0	1	0	0	0	0	0	0	2
08:30 AM	0	1	0	0	0	0	0	0	0	0	0	0	1
08:45 AM	0	1	0	0	4	1	0	0	0	0	1	0	7
Total	0	5	0	0	5	2	0	0	0	0	2	0	14
09:00 AM	0	1	1	0	1	0	0	1	0	0	4	0	8
09:15 AM	1	1	0	0	6	0	1	0	0	0	0	0	9
09:30 AM	1	3	0	0	2	0	1	0	0	0	2	3	12
09:45 AM	0	0	0	0	3	0	1	0	0	0	1	0	5
Total	2	5	1	0	12	0	3	1	0	0	7	3	34
12:00 PM	0	1	0	0	7	1	0	1	0	0	0	0	10
12:15 PM	0	0	0	0	3	0	0	0	1	0	4	0	8
12:30 PM	1	0	0	0	1	0	1	0	0	0	3	0	6
12:45 PM	0	0	0	0	5	1	1	0	0	0	2	0	9
Total	1	1	0	0	16	2	2	1	1	0	9	0	33
01:00 PM	0	1	1	0	3	0	1	1	0	0	4	0	11
01:15 PM	1	0	0	0	6	0	0	0	0	0	3	0	10
01:30 PM	0	2	0	0	5	0	0	1	1	0	1	0	10
01:45 PM	0	0	0	0	3	0	0	0	0	0	2	0	5
Total	1	3	1	0	17	0	1	2	1	0	10	0	36
03:00 PM	0	0	0	0	1	1	0	1	0	0	3	0	6
03:15 PM	0	1	0	1	1	0	0	1	0	0	1	0	5
03:30 PM	0	0	0	0	0	1	0	0	1	0	4	0	6
03:45 PM	0	2	0	0	1	0	0	1	0	0	1	0	5
Total	0	3	0	1	3	2	0	3	1	0	9	0	22
04:00 PM	1	0	0	0	2	0	0	0	0	1	3	0	7
04:15 PM	0	1	0	0	0	0	0	0	0	0	0	0	1
04:30 PM	0	0	0	0	0	1	1	0	0	0	3	0	5
04:45 PM	1	0	0	0	0	0	0	0	0	0	4	0	5
Total	2	1	0	0	2	1	1	0	0	1	10	0	18
05:00 PM	0	1	0	0	0	0	0	0	1	0	2	1	5
05:15 PM	0	1	0	0	1	0	0	0	0	0	0	0	2
05:30 PM	0	1	0	1	1	0	0	1	0	0	1	0	5
05:45 PM	0	1	0	0	0	0	0	0	0	0	2	0	3
Total	0	4	0	1	2	0	0	1	1	0	5	1	15
Grand Total	6	28	5	4	64	7	10	10	4	2	54	4	198
Apprch %	15.4	71.8	12.8	5.3	85.3	9.3	41.7	41.7	16.7	3.3	90	6.7	
Total %	3	14.1	2.5	2	32.3	3.5	5.1	5.1	2	1	27.3	2	

CITY TRAFFIC COUNTERS

626.991.7522

www.ctcounters.com

File Name : sanfernando_osborne_3axle
Site Code : 00000000
Start Date : 3/25/2015
Page No : 2

	San Fernando Rd Southbound				Osborne St Westbound				San Fernando Rd Northbound				Osborne St Eastbound				
Start Time	Left	Thru	Right	App. Total	Left	Thru	Right	App. Total	Left	Thru	Right	App. Total	Left	Thru	Right	App. Total	Int. Total
Peak Hour Analysis From 07:00 AM to 09:45 AM - Peak 1 of 1																	
Peak Hour for Entire Intersection Begins at 08:45 AM																	
08:45 AM	0	1	0	1	0	4	**1**	5	0	0	0	0	0	1	0	1	7
09:00 AM	0	1	**1**	2	0	1	0	1	0	**1**	0	**1**	0	**4**	0	4	8
09:15 AM	**1**	1	0	2	0	**6**	0	**6**	**1**	0	0	1	0	0	0	0	9
09:30 AM	1	**3**	0	**4**	0	2	0	2	1	0	0	1	0	2	**3**	**5**	**12**
Total Volume	2	6	1	9	0	13	1	14	2	1	0	3	0	7	3	10	36
% App. Total	22.2	66.7	11.1		0	92.9	7.1		66.7	33.3	0		0	70	30		
PHF	.500	.500	.250	.563	.000	.542	.250	.583	.500	.250	.000	.750	.000	.438	.250	.500	.750

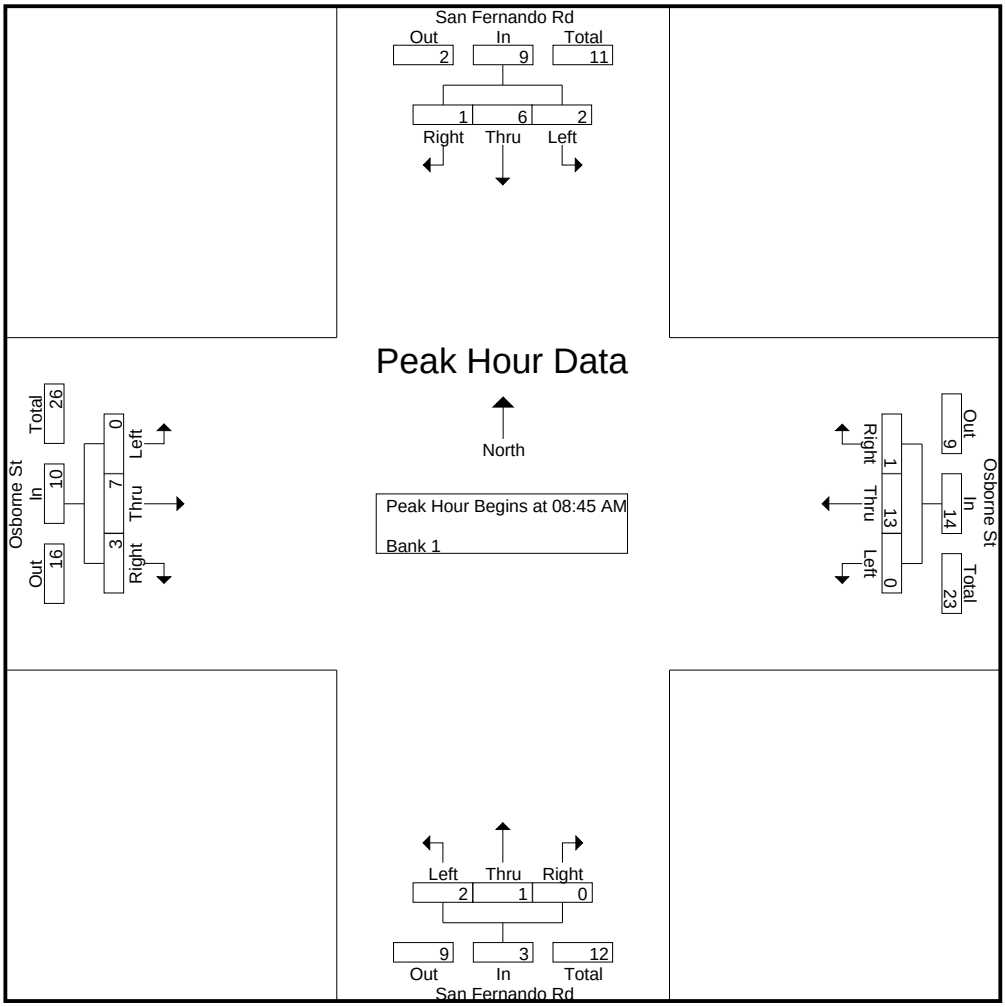

CITY TRAFFIC COUNTERS

626.991.7522

www.ctcounters.com

File Name : sanfernando_osborne_3axle
Site Code : 00000000
Start Date : 3/25/2015
Page No : 3

	San Fernando Rd Southbound				Osborne St Westbound				San Fernando Rd Northbound				Osborne St Eastbound				
Start Time	Left	Thru	Right	App. Total	Left	Thru	Right	App. Total	Left	Thru	Right	App. Total	Left	Thru	Right	App. Total	Int. Total
Peak Hour Analysis From 10:00 AM to 01:45 PM - Peak 1 of 1																	
Peak Hour for Entire Intersection Begins at 12:45 PM																	
12:45 PM	0	0	0	0	0	5	**1**	**6**	**1**	0	0	1	0	2	0	2	9
01:00 PM	0	1	**1**	**2**	0	3	0	3	1	**1**	0	**2**	0	**4**	0	**4**	**11**
01:15 PM	**1**	0	0	1	0	**6**	0	6	0	0	0	0	0	3	0	3	10
01:30 PM	0	**2**	0	2	0	5	0	5	0	1	**1**	2	0	1	0	1	10
Total Volume	1	3	1	5	0	19	1	20	2	2	1	5	0	10	0	10	40
% App. Total	20	60	20		0	95	5		40	40	20		0	100	0		
PHF	.250	.375	.250	.625	.000	.792	.250	.833	.500	.500	.250	.625	.000	.625	.000	.625	.909

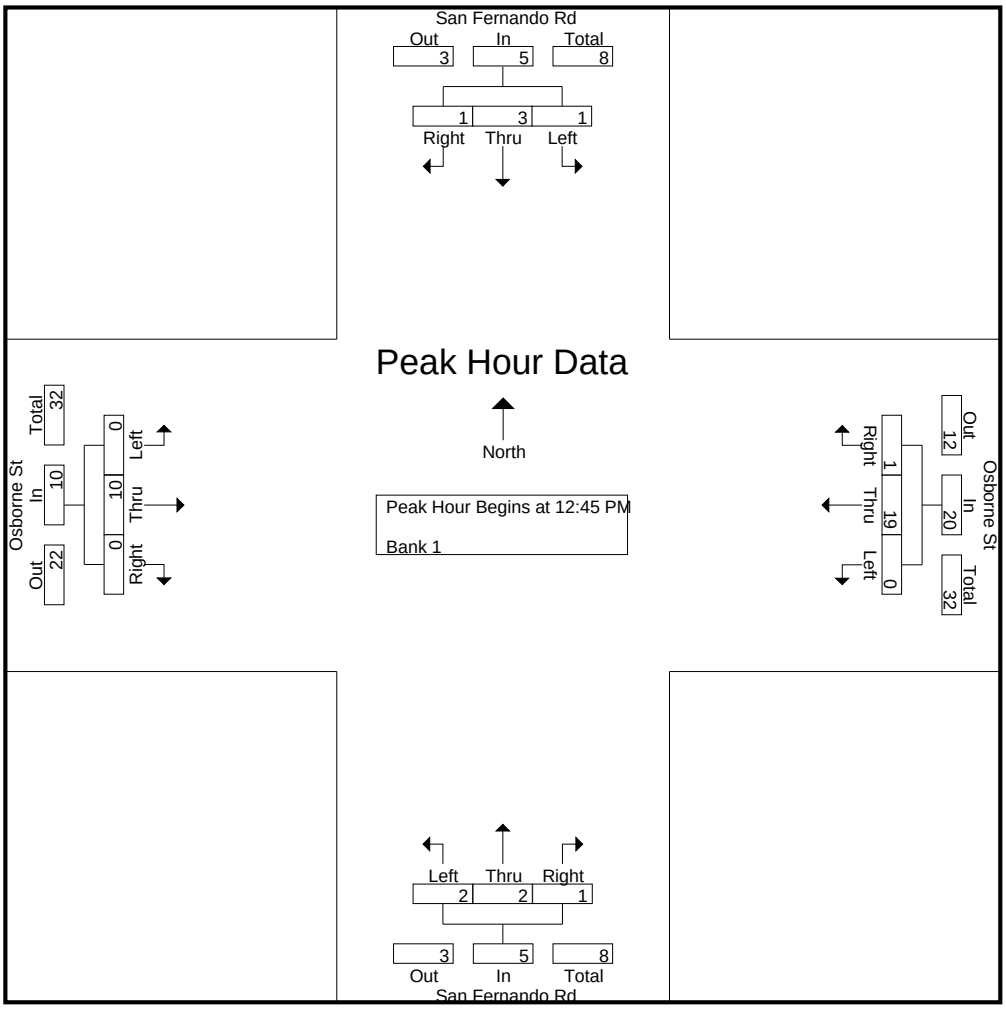

CITY TRAFFIC COUNTERS

626.991.7522

www.ctcounters.com

File Name : sanfernando_osborne_3axle
Site Code : 00000000
Start Date : 3/25/2015
Page No : 4

	San Fernando Rd Southbound				Osborne St Westbound				San Fernando Rd Northbound				Osborne St Eastbound				
Start Time	Left	Thru	Right	App. Total	Left	Thru	Right	App. Total	Left	Thru	Right	App. Total	Left	Thru	Right	App. Total	Int. Total
Peak Hour Analysis From 02:00 PM to 05:45 PM - Peak 1 of 1																	
Peak Hour for Entire Intersection Begins at 03:15 PM																	
03:15 PM	0	1	0	1	**1**	1	0	**2**	0	**1**	0	**1**	0	1	0	1	5
03:30 PM	0	0	0	0	0	0	**1**	1	0	0	**1**	1	0	**4**	0	**4**	6
03:45 PM	0	**2**	0	**2**	0	1	0	1	0	1	0	1	0	1	0	1	5
04:00 PM	**1**	0	0	1	0	**2**	0	2	0	0	0	0	**1**	3	0	4	**7**
Total Volume	1	3	0	4	1	4	1	6	0	2	1	3	1	9	0	10	23
% App. Total	25	75	0		16.7	66.7	16.7		0	66.7	33.3		10	90	0		
PHF	.250	.375	.000	.500	.250	.500	.250	.750	.000	.500	.250	.750	.250	.563	.000	.625	.821

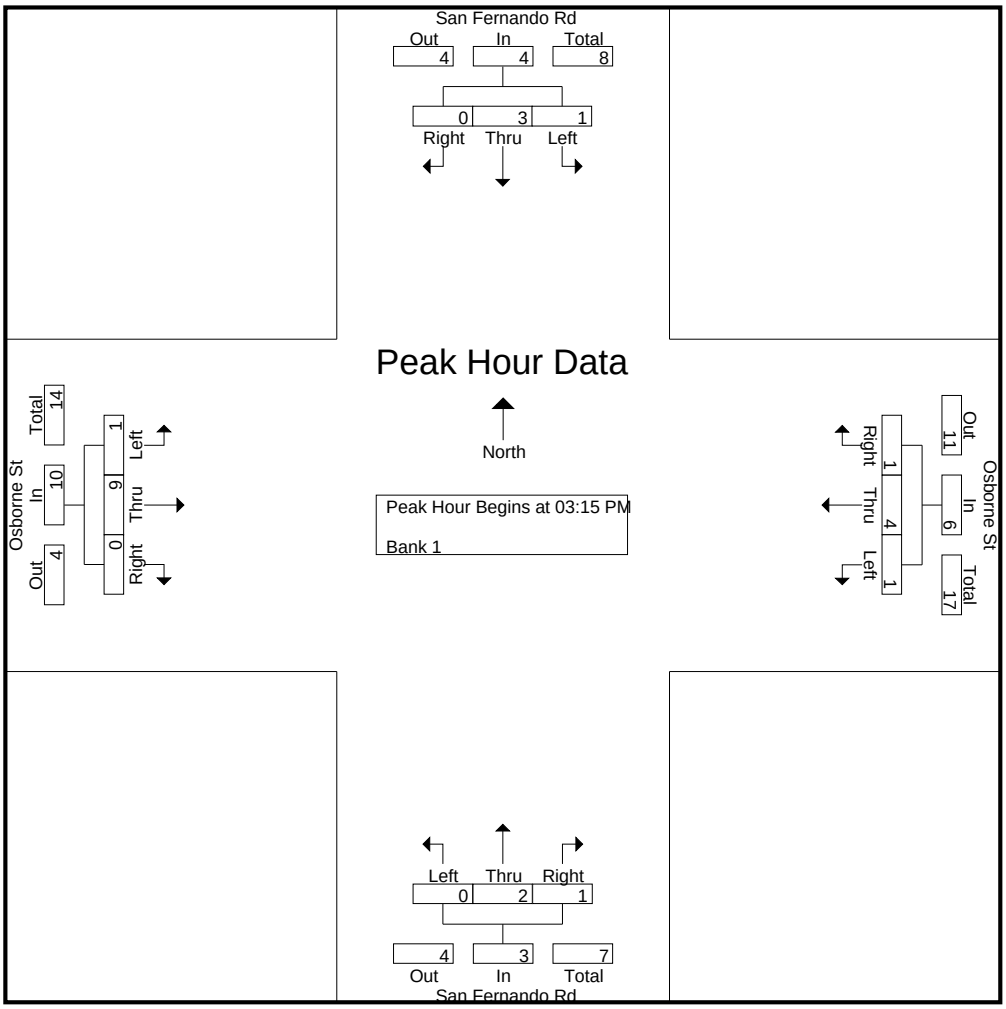

CITY TRAFFIC COUNTERS

626.991.7522

www.ctcounters.com

File Name : sanfernando_osborne_4axle
Site Code : 00000000
Start Date : 3/25/2015
Page No : 1

Groups Printed- Bank 2

	San Fernando Rd Southbound			Osborne St Westbound			San Fernando Rd Northbound			Osborne St Eastbound			
Start Time	Left	Thru	Right	Left	Thru	Right	Left	Thru	Right	Left	Thru	Right	Int. Total
07:00 AM	0	1	0	0	1	0	0	0	0	0	0	0	2
07:30 AM	0	0	0	0	2	0	0	0	0	0	0	0	2
07:45 AM	0	0	0	0	0	0	0	0	0	0	3	0	3
Total	0	1	0	0	3	0	0	0	0	0	3	0	7
08:00 AM	0	1	0	0	1	0	0	0	0	0	0	0	2
08:15 AM	0	2	0	0	0	0	0	0	1	0	0	1	4
08:30 AM	0	1	0	0	0	0	0	0	0	0	1	0	2
08:45 AM	0	1	0	0	0	0	0	0	0	0	1	0	2
Total	0	5	0	0	1	0	0	0	1	0	2	1	10
09:00 AM	0	0	0	0	0	0	0	0	0	0	4	0	4
09:15 AM	0	0	0	0	2	0	0	0	0	0	3	0	5
09:30 AM	0	0	0	0	2	0	0	0	1	0	1	0	4
09:45 AM	0	0	0	0	2	0	0	0	0	0	5	0	7
Total	0	0	0	0	6	0	0	0	1	0	13	0	20
12:00 PM	0	0	0	0	0	0	0	0	0	0	3	0	3
12:30 PM	0	1	0	0	1	0	0	0	0	0	3	0	5
12:45 PM	0	0	0	0	1	0	0	1	0	1	2	0	5
Total	0	1	0	0	2	0	0	1	0	1	8	0	13
01:00 PM	0	0	0	0	2	0	0	0	0	0	0	0	2
01:15 PM	0	0	0	0	1	0	0	1	0	1	7	0	10
01:30 PM	0	0	0	0	0	0	0	3	0	0	3	0	6
01:45 PM	0	0	0	0	0	0	0	0	0	0	2	0	2
Total	0	0	0	0	3	0	0	4	0	1	12	0	20
03:00 PM	0	1	0	0	0	0	0	0	0	0	2	0	3
03:15 PM	0	0	0	0	0	0	0	0	0	1	4	0	5
03:30 PM	0	0	0	0	0	0	0	1	0	0	1	0	2
03:45 PM	0	1	0	0	0	0	0	1	0	0	1	0	3
Total	0	2	0	0	0	0	0	2	0	1	8	0	13
04:00 PM	0	0	0	0	0	0	0	0	0	0	2	0	2
04:45 PM	0	1	0	0	0	0	0	0	0	0	0	0	1
Total	0	1	0	0	0	0	0	0	0	0	2	0	3
05:00 PM	0	0	0	0	0	0	0	0	0	0	1	0	1
05:15 PM	0	0	0	0	1	0	0	0	0	0	0	0	1
05:30 PM	0	0	0	0	0	0	0	0	0	0	1	0	1
Total	0	0	0	0	1	0	0	0	0	0	2	0	3
Grand Total	0	10	0	0	16	0	0	7	2	3	50	1	89
Apprch %	0	100	0	0	100	0	0	77.8	22.2	5.6	92.6	1.9	
Total %	0	11.2	0	0	18	0	0	7.9	2.2	3.4	56.2	1.1	

CITY TRAFFIC COUNTERS

626.991.7522

www.ctcounters.com

File Name : sanfernando_osborne_4axle
Site Code : 00000000
Start Date : 3/25/2015
Page No : 2

	San Fernando Rd Southbound				Osborne St Westbound				San Fernando Rd Northbound				Osborne St Eastbound				
Start Time	Left	Thru	Right	App. Total	Left	Thru	Right	App. Total	Left	Thru	Right	App. Total	Left	Thru	Right	App. Total	Int. Total
Peak Hour Analysis From 07:00 AM to 09:45 AM - Peak 1 of 1																	
Peak Hour for Entire Intersection Begins at 09:00 AM																	
09:00 AM	0	0	0	0	0	0	0	0	0	0	0	0	0	4	0	4	4
09:15 AM	0	0	0	0	0	**2**	0	**2**	0	0	0	0	0	3	0	3	5
09:30 AM	0	0	0	0	0	2	0	2	0	0	**1**	**1**	0	1	0	1	4
09:45 AM	0	0	0	0	0	2	0	2	0	0	0	0	0	**5**	0	**5**	**7**
Total Volume	0	0	0	0	0	6	0	6	0	0	1	1	0	13	0	13	20
% App. Total	0	0	0		0	100	0		0	0	100		0	100	0		
PHF	.000	.000	.000	.000	.000	.750	.000	.750	.000	.000	.250	.250	.000	.650	.000	.650	.714

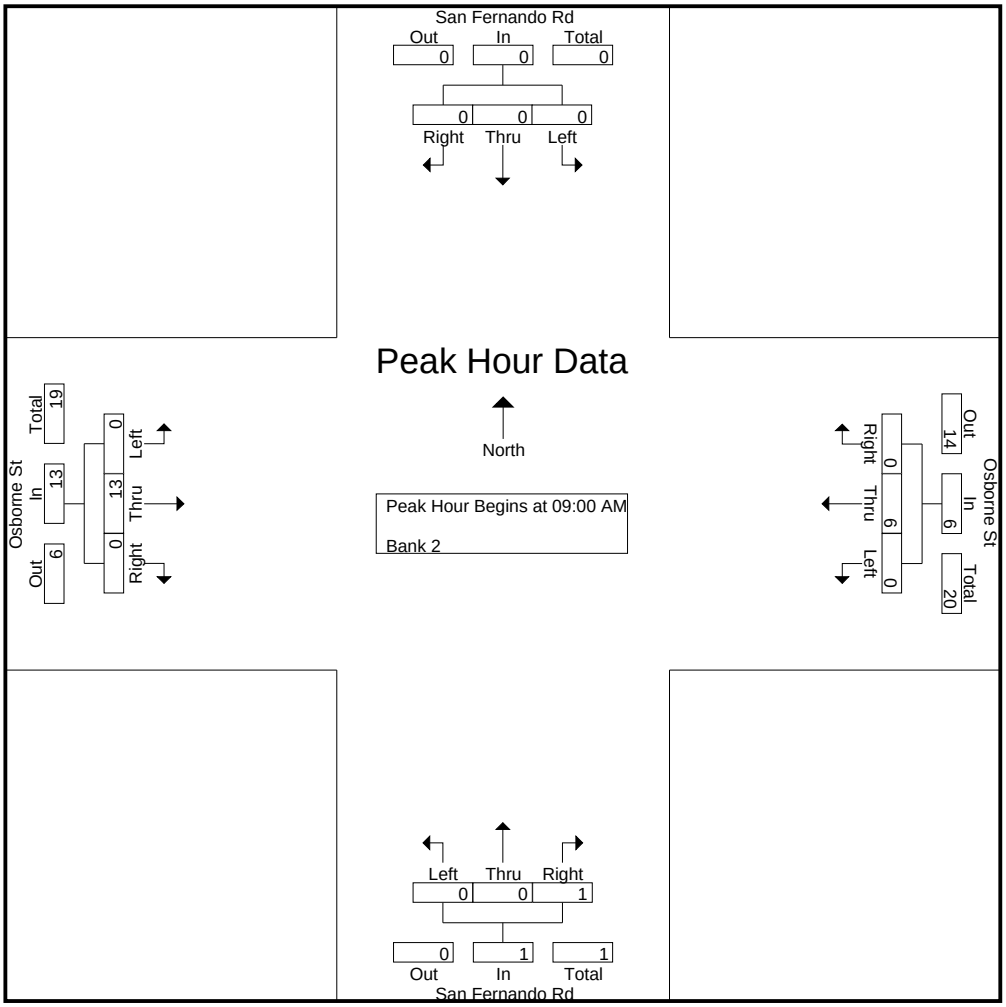

CITY TRAFFIC COUNTERS

626.991.7522

www.ctcounters.com

File Name : sanfernando_osborne_4axle
Site Code : 00000000
Start Date : 3/25/2015
Page No : 3

	San Fernando Rd Southbound				Osborne St Westbound				San Fernando Rd Northbound				Osborne St Eastbound				
Start Time	Left	Thru	Right	App. Total	Left	Thru	Right	App. Total	Left	Thru	Right	App. Total	Left	Thru	Right	App. Total	Int. Total
Peak Hour Analysis From 10:00 AM to 01:45 PM - Peak 1 of 1																	
Peak Hour for Entire Intersection Begins at 12:45 PM																	
12:45 PM	0	0	0	0	0	1	0	1	0	1	0	1	**1**	2	0	3	5
01:00 PM	0	0	0	0	0	**2**	0	**2**	0	0	0	0	0	0	0	0	2
01:15 PM	0	0	0	0	0	1	0	1	0	1	0	1	1	**7**	0	**8**	**10**
01:30 PM	0	0	0	0	0	0	0	0	0	**3**	0	**3**	0	3	0	3	6
Total Volume	0	0	0	0	0	4	0	4	0	5	0	5	2	12	0	14	23
% App. Total	0	0	0		0	100	0		0	100	0		14.3	85.7	0		
PHF	.000	.000	.000	.000	.000	.500	.000	.500	.000	.417	.000	.417	.500	.429	.000	.438	.575

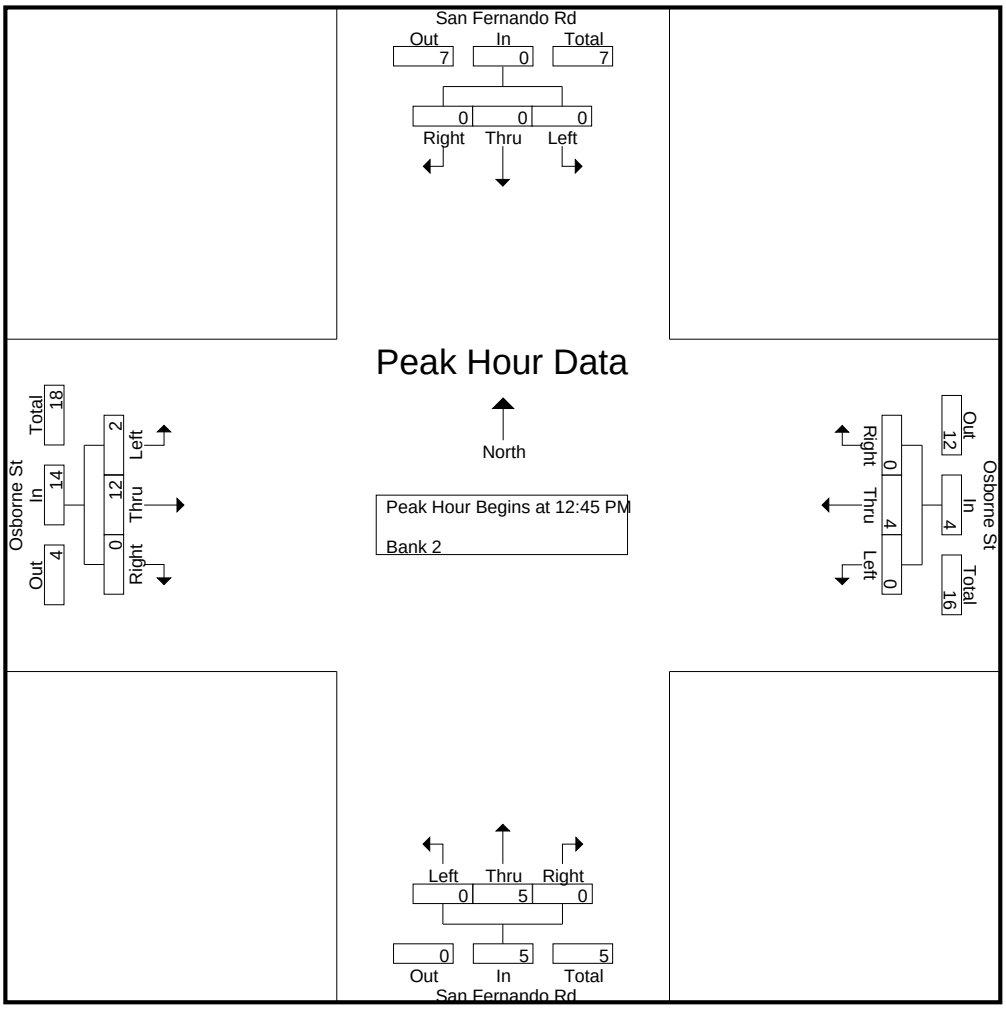

CITY TRAFFIC COUNTERS

626.991.7522

www.ctcounters.com

File Name : sanfernando_osborne_4axle
Site Code : 00000000
Start Date : 3/25/2015
Page No : 4

	San Fernando Rd Southbound				Osborne St Westbound				San Fernando Rd Northbound				Osborne St Eastbound				
Start Time	Left	Thru	Right	App. Total	Left	Thru	Right	App. Total	Left	Thru	Right	App. Total	Left	Thru	Right	App. Total	Int. Total
Peak Hour Analysis From 02:00 PM to 05:45 PM - Peak 1 of 1																	
Peak Hour for Entire Intersection Begins at 03:00 PM																	
03:00 PM	0	**1**	0	**1**	0	0	0	0	0	0	0	0	0	2	0	2	3
03:15 PM	0	0	0	0	0	0	0	0	0	0	0	0	**1**	**4**	0	**5**	**5**
03:30 PM	0	0	0	0	0	0	0	0	0	**1**	0	**1**	0	1	0	1	2
03:45 PM	0	1	0	1	0	0	0	0	0	1	0	1	0	1	0	1	3
Total Volume	0	2	0	2	0	0	0	0	0	2	0	2	1	8	0	9	13
% App. Total	0	100	0		0	0	0		0	100	0		11.1	88.9	0		
PHF	.000	.500	.000	.500	.000	.000	.000	.000	.000	.500	.000	.500	.250	.500	.000	.450	.650

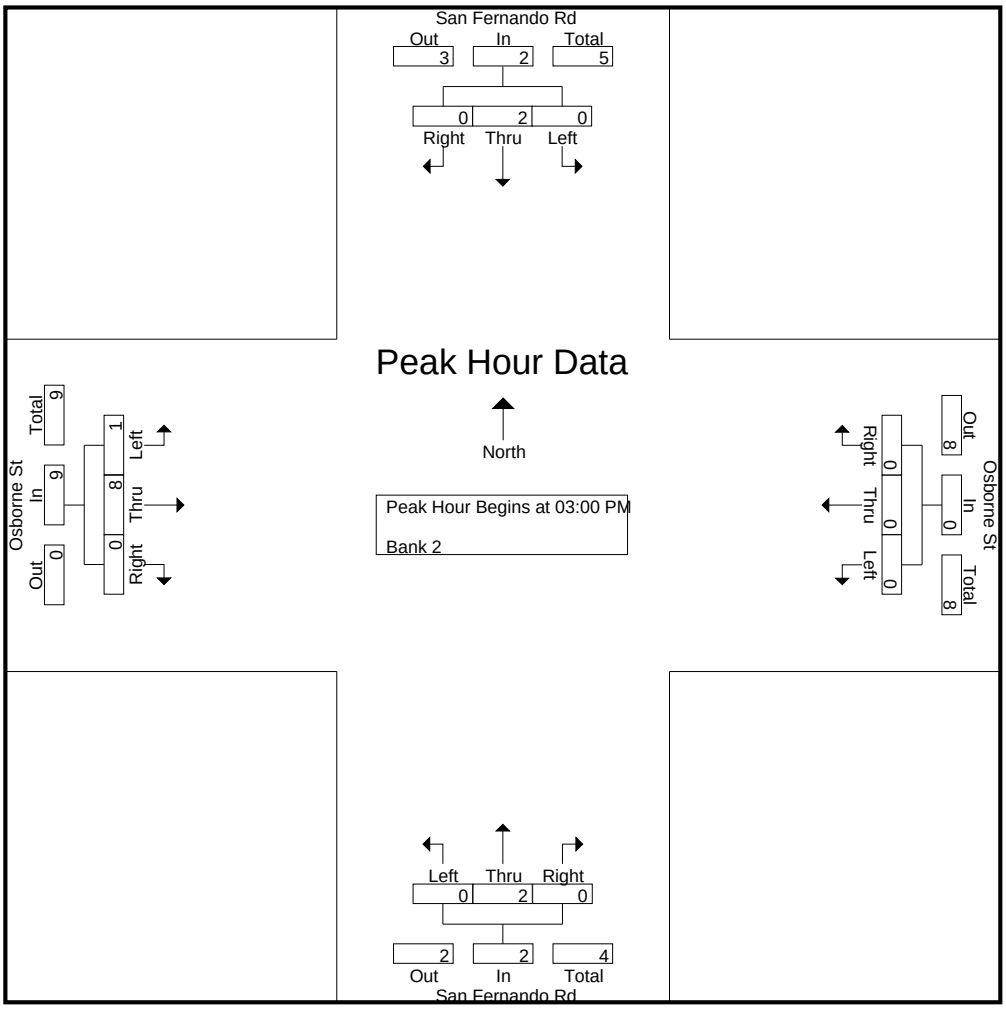

CITY TRAFFIC COUNTERS

626.991.7522

www.ctcounters.com

File Name : sanfernando_osborne_5axle
Site Code : 00000000
Start Date : 3/25/2015
Page No : 1

Groups Printed- Unshifted

	San Fernando Rd Southbound			Osborne St Westbound			San Fernando Rd Northbound			Osborne St Eastbound			
Start Time	Left	Thru	Right	Left	Thru	Right	Left	Thru	Right	Left	Thru	Right	Int. Total
07:00 AM	1	3	0	0	3	0	0	1	1	0	0	0	9
07:15 AM	0	3	0	0	0	0	0	0	0	0	0	1	4
07:30 AM	0	1	0	0	3	0	0	0	1	0	1	0	6
07:45 AM	0	2	0	0	1	0	0	0	0	0	0	1	4
Total	1	9	0	0	7	0	0	1	2	0	1	2	23
08:00 AM	0	3	0	0	0	0	0	0	0	0	0	0	3
08:15 AM	0	2	0	1	1	0	0	1	0	0	0	0	5
08:30 AM	0	1	0	0	1	0	0	1	0	0	1	0	4
08:45 AM	0	1	2	0	1	0	1	1	0	1	1	0	8
Total	0	7	2	1	3	0	1	3	0	1	2	0	20
09:00 AM	1	0	1	0	4	0	0	2	0	0	2	0	10
09:15 AM	1	1	1	1	2	0	0	0	0	0	0	2	8
09:30 AM	1	0	0	0	4	0	0	0	0	0	1	0	6
09:45 AM	0	1	1	0	1	0	1	0	1	0	1	0	6
Total	3	2	3	1	11	0	1	2	1	0	4	2	30
12:00 PM	0	0	0	0	1	1	0	0	0	0	3	0	5
12:15 PM	0	0	0	0	2	1	0	0	0	0	1	0	4
12:30 PM	0	0	0	0	1	0	0	0	0	0	1	0	2
12:45 PM	0	0	0	0	0	1	0	0	1	0	1	0	3
Total	0	0	0	0	4	3	0	0	1	0	6	0	14
01:00 PM	0	2	0	0	1	1	0	0	0	0	0	0	4
01:15 PM	0	1	0	0	1	0	0	0	0	0	1	0	3
01:30 PM	0	1	0	0	0	0	0	0	0	0	2	0	3
01:45 PM	0	1	0	0	1	0	0	1	0	0	1	0	4
Total	0	5	0	0	3	1	0	1	0	0	4	0	14
03:00 PM	0	2	0	1	1	0	1	0	1	0	2	0	8
03:15 PM	1	0	0	0	0	0	0	2	0	0	1	0	4
03:30 PM	0	0	0	1	0	0	0	1	0	0	0	0	2
03:45 PM	0	0	0	0	0	0	0	2	1	0	0	0	3
Total	1	2	0	2	1	0	1	5	2	0	3	0	17
04:00 PM	0	1	0	0	1	0	0	2	0	0	0	0	4
04:15 PM	0	0	0	2	0	0	0	0	0	0	0	0	2
04:45 PM	0	0	0	0	1	0	0	1	0	1	1	0	4
Total	0	1	0	2	2	0	0	3	0	1	1	0	10
05:00 PM	0	0	0	0	0	0	0	0	0	0	2	0	2
05:15 PM	0	1	0	0	1	0	0	0	0	0	0	0	2
Total	0	1	0	0	1	0	0	0	0	0	2	0	4
Grand Total	5	27	5	6	32	4	3	15	6	2	23	4	132
Apprch %	13.5	73	13.5	14.3	76.2	9.5	12.5	62.5	25	6.9	79.3	13.8	
Total %	3.8	20.5	3.8	4.5	24.2	3	2.3	11.4	4.5	1.5	17.4	3	

CITY TRAFFIC COUNTERS

626.991.7522

www.ctcounters.com

File Name : sanfernando_osborne_5axle
Site Code : 00000000
Start Date : 3/25/2015
Page No : 2

	San Fernando Rd Southbound				Osborne St Westbound				San Fernando Rd Northbound				Osborne St Eastbound				
Start Time	Left	Thru	Right	App. Total	Left	Thru	Right	App. Total	Left	Thru	Right	App. Total	Left	Thru	Right	App. Total	Int. Total
Peak Hour Analysis From 07:00 AM to 09:45 AM - Peak 1 of 1																	
Peak Hour for Entire Intersection Begins at 08:45 AM																	
08:45 AM	0	**1**	**2**	**3**	0	1	0	1	**1**	1	0	**2**	**1**	1	0	**2**	8
09:00 AM	**1**	0	1	2	0	**4**	0	**4**	0	**2**	0	2	0	**2**	0	2	**10**
09:15 AM	1	1	1	3	**1**	2	0	3	0	0	0	0	0	0	**2**	2	8
09:30 AM	1	0	0	1	0	4	0	4	0	0	0	0	0	1	0	1	6
Total Volume	3	2	4	9	1	11	0	12	1	3	0	4	1	4	2	7	32
% App. Total	33.3	22.2	44.4		8.3	91.7	0		25	75	0		14.3	57.1	28.6		
PHF	.750	.500	.500	.750	.250	.688	.000	.750	.250	.375	.000	.500	.250	.500	.250	.875	.800

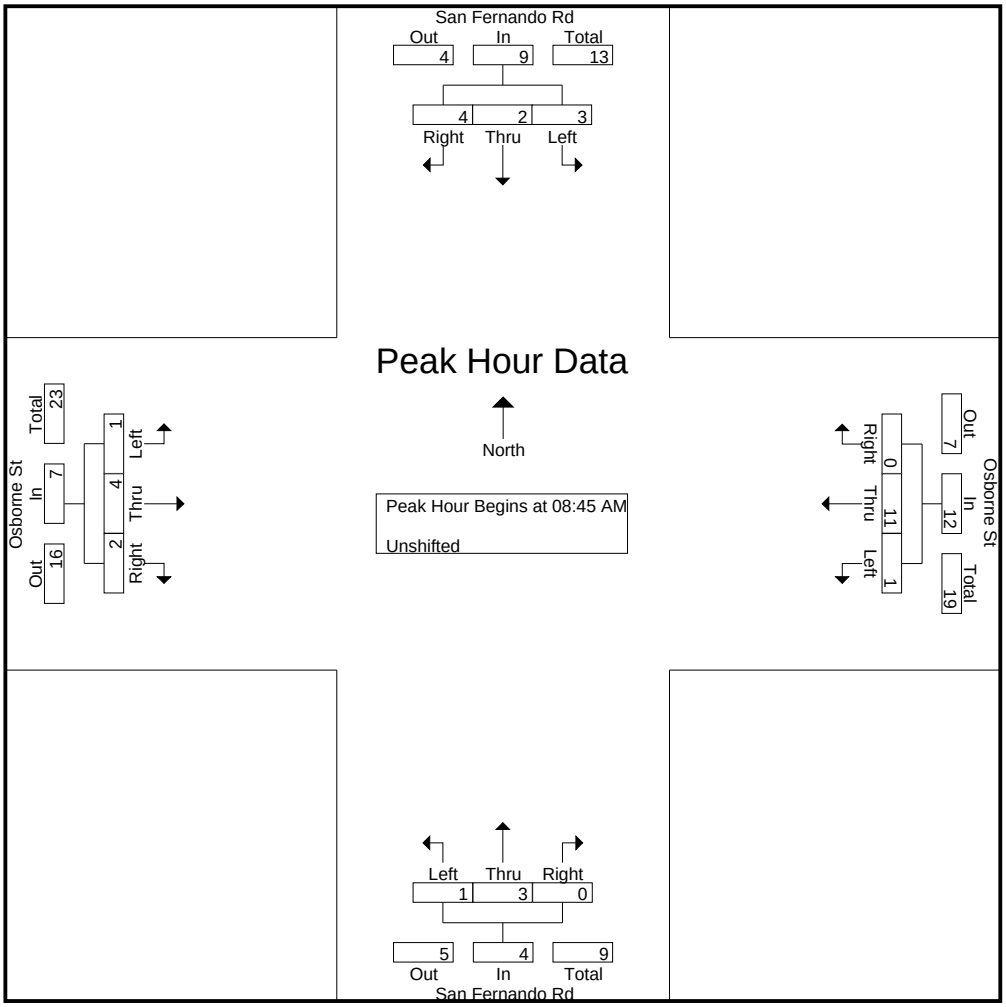

CITY TRAFFIC COUNTERS

626.991.7522

www.ctcounters.com

File Name : sanfernando_osborne_5axle
Site Code : 00000000
Start Date : 3/25/2015
Page No : 3

	San Fernando Rd Southbound				Osborne St Westbound				San Fernando Rd Northbound				Osborne St Eastbound				
Start Time	Left	Thru	Right	App. Total	Left	Thru	Right	App. Total	Left	Thru	Right	App. Total	Left	Thru	Right	App. Total	Int. Total
Peak Hour Analysis From 10:00 AM to 01:45 PM - Peak 1 of 1																	
Peak Hour for Entire Intersection Begins at 12:00 PM																	
12:00 PM	0	0	0	0	0	1	**1**	2	0	0	0	0	0	**3**	0	**3**	**5**
12:15 PM	0	0	0	0	0	**2**	1	**3**	0	0	0	0	0	1	0	1	4
12:30 PM	0	0	0	0	0	1	0	1	0	0	0	0	0	1	0	1	2
12:45 PM	0	0	0	0	0	0	1	1	0	0	**1**	**1**	0	1	0	1	3
Total Volume	0	0	0	0	0	4	3	7	0	0	1	1	0	6	0	6	14
% App. Total	0	0	0		0	57.1	42.9		0	0	100		0	100	0		
PHF	.000	.000	.000	.000	.000	.500	.750	.583	.000	.000	.250	.250	.000	.500	.000	.500	.700

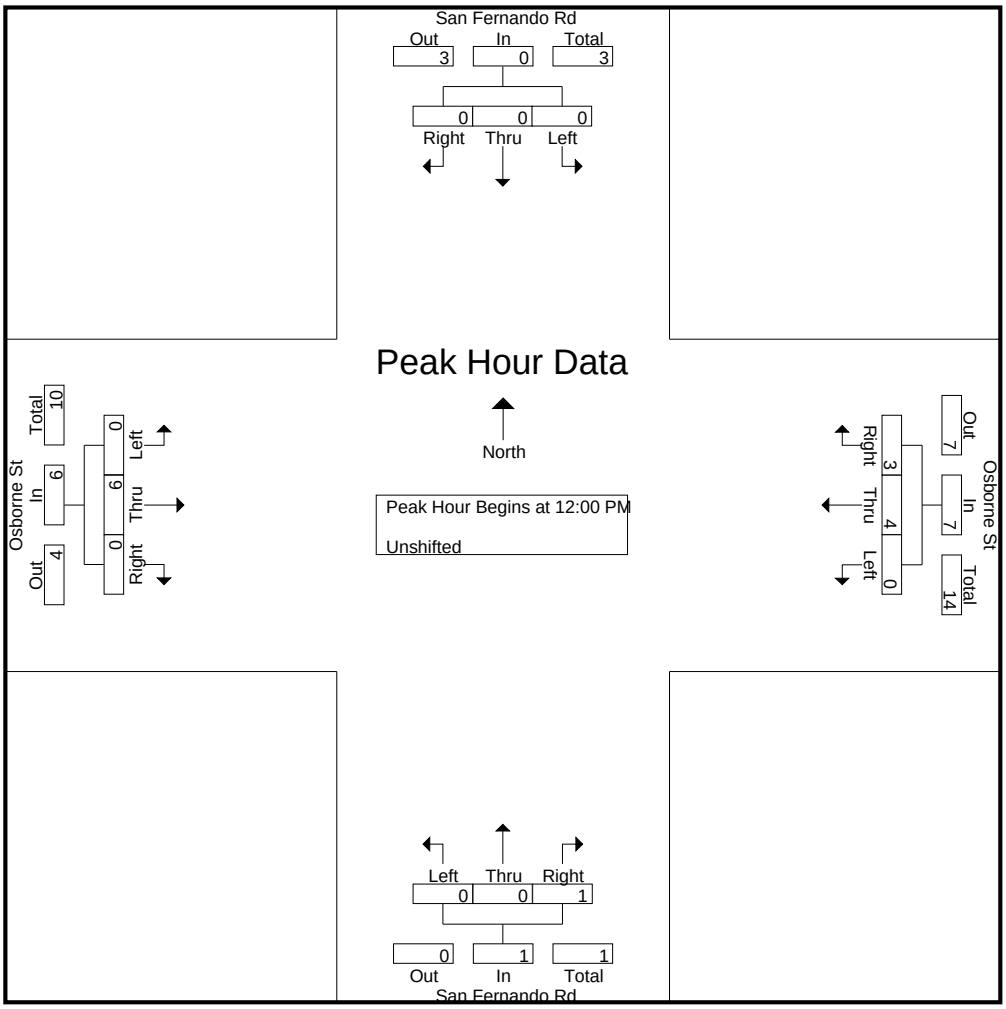

CITY TRAFFIC COUNTERS

626.991.7522

www.ctcounters.com

File Name : sanfernando_osborne_5axle
Site Code : 00000000
Start Date : 3/25/2015
Page No : 4

	San Fernando Rd Southbound				Osborne St Westbound				San Fernando Rd Northbound				Osborne St Eastbound				
Start Time	Left	Thru	Right	App. Total	Left	Thru	Right	App. Total	Left	Thru	Right	App. Total	Left	Thru	Right	App. Total	Int. Total
Peak Hour Analysis From 02:00 PM to 05:45 PM - Peak 1 of 1																	
Peak Hour for Entire Intersection Begins at 03:00 PM																	
03:00 PM	0	**2**	0	**2**	**1**	**1**	0	**2**	**1**	0	**1**	2	0	**2**	0	**2**	**8**
03:15 PM	**1**	0	0	1	0	0	0	0	0	**2**	0	2	0	1	0	1	4
03:30 PM	0	0	0	0	1	0	0	1	0	1	0	1	0	0	0	0	2
03:45 PM	0	0	0	0	0	0	0	0	0	2	1	**3**	0	0	0	0	3
Total Volume	1	2	0	3	2	1	0	3	1	5	2	8	0	3	0	3	17
% App. Total	33.3	66.7	0		66.7	33.3	0		12.5	62.5	25		0	100	0		
PHF	.250	.250	.000	.375	.500	.250	.000	.375	.250	.625	.500	.667	.000	.375	.000	.375	.531

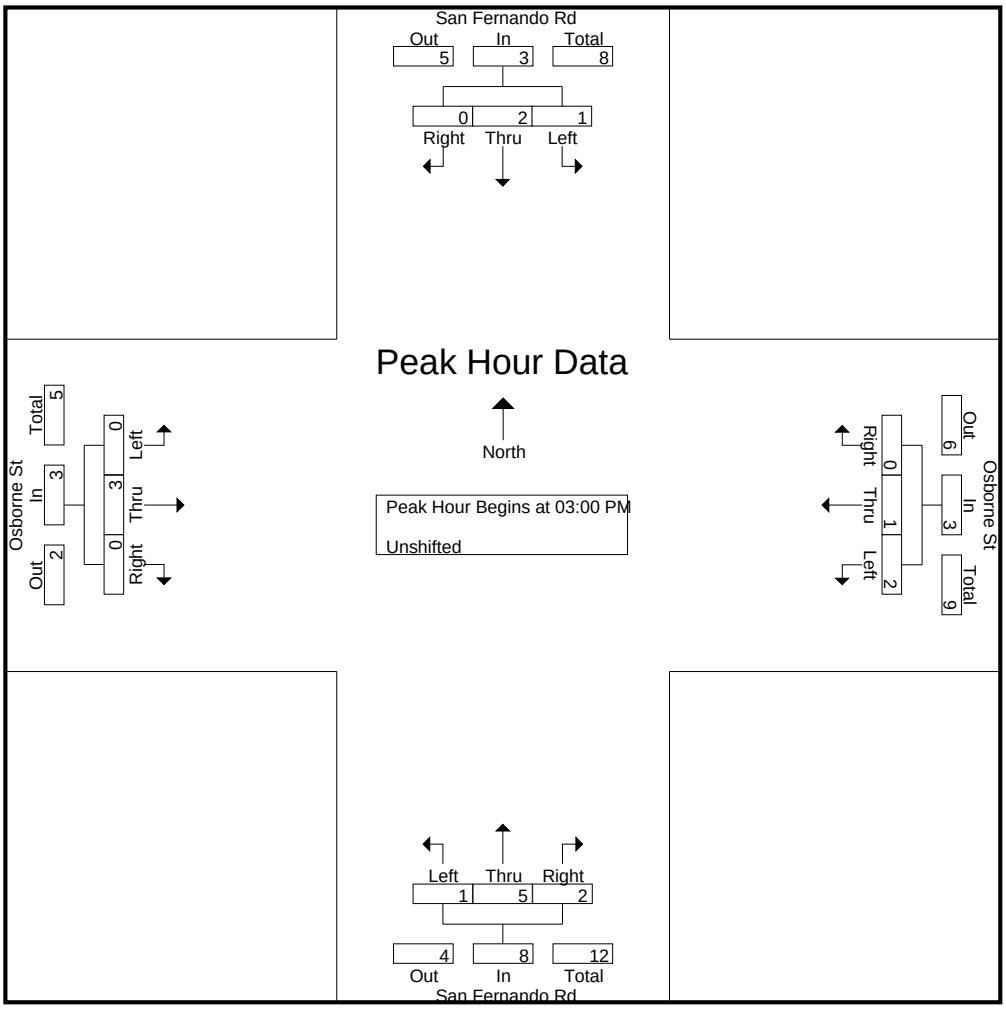

APPENDIX B

CMA LEVELS OF SERVICE EXPLANATION

CRITICAL MOVEMENT ANALYSIS (CMA) DESCRIPTION

Level of Service is a term used to describe prevailing conditions and their effect on traffic. Broadly interpreted, the Level of Service concept denotes any one of a number of differing combinations of operating conditions which may take place as a roadway is accommodating various traffic volumes. Level of Service is a qualitative measure of the effect of such factors as travel speed, travel time, interruptions, freedom to maneuver, safety, driving comfort and convenience.

Six Levels of Service, A through F, have been defined in the 1965 *Highway Capacity Manual*. Level of Service A describes a condition of free flow, with low traffic volumes and relatively high speeds, while Level of Service F describes forced traffic flow at low speeds with jammed conditions and queues which cannot clear during the green phases.

Critical Movement Analysis (CMA) is a procedure which provides a capacity and level of service geometry and traffic signal operation and results in a level of service determination for the intersection as a whole operating unit.

The per lane volume for each movement in the intersection is determined and the per lane intersection capacity based on the Transportation Research Board (TRB) Report 212 (*Interim Materials on Highway Capacity*). The resulting CMA represents the ratio of the intersection's cumulative volume over its respective capacity (V/C ratio). Critical Movement Analysis takes into account lane widths, bus and truck operations, pedestrian activity and parking activity, as well as number of lanes and geometrics.

The Level of Service (abbreviated from the *Highway Capacity Manual*) are listed here with their corresponding CMA and Load Factor equivalents. Load Factor is that proportion of the signal cycles during the peak hour which are fully loaded; i.e. when all of the vehicles waiting at the beginning of green are not able to clear on that green phase.

Critical Movement Analysis Characteristics

Level of Service	Load Factor	Equivalent CMA
A (free flow)	0.0	0.00 - 0.60
B (rural design)	0.0 - 0.1	0.61 - 0.70
C (urban design)	0.1 - 0.3	0.71 - 0.80
D (maximum urban design)	0.3 - 0.7	0.81 - 0.90
E (capacity)	0.7 - 1.0	0.91 - 1.00
F (force flow)	Not Applicable	Not Applicable

SERVICE LEVEL A
There are no loaded cycles and few are even close to loaded at this service level. No approach phase is fully utilized by traffic and no vehicle waits longer than one red indication.

SERVICE LEVEL B
This level represents stable operation where an occasional approach phase is fully utilized and a substantial number are approaching full use. Many drivers begin to feel restricted within platoons of vehicles.

SERVICE LEVEL C
At this level stable operation continues. Loading is still intermittent but more frequent than at Level B. Occasionally drivers may have to wait through more one red signal indication and backups may develop behind turning vehicles. Most drivers feel somewhat restricted, but not objectionably so.

SERVICE LEVEL D
This level encompasses a zone of increasing restriction approaching instability at the intersection. Delays to approaching vehicles may be substantial during short peaks within the peak hour, but enough cycles with lower demand occur to permit periodic clearance of queues, thus preventing excessive backups. Drivers frequently have to wait through more than one red signal. This level is the lower limit of acceptable operation to most drivers.

SERVICE LEVEL E
This represents near capacity and capacity operation. At capacity (CMA = 1.0) it represents the most vehicles that the particular intersection can accommodate. However, full utilization of every signal cycle is seldom attained no matter how great the demand. At this level all drivers wait through more than one red signal, and frequently through several.

SERVICE LEVEL F
Jammed conditions. Traffic backed up from a downstream location on one of the street restricts or prevents movement of traffic through the intersection under consideration.

APPENDIX C

CITY OF LOS ANGELES CMA DATA WORKSHEETS
- WEEKDAY AM, MID-DAY AND PM PEAK HOURS

C-1 EXISTING WITH PROJECT TRAFFIC VOLUME FIGURES

C-2 YEAR 2018 CUMULATIVE WITHOUT PROJECT TRAFFIC VOLUME FIGURES

C-3 YEAR 2018 CUMULATIVE WITH PROJECT TRAFFIC VOLUME FIGURES

Level of Service Workheet
(Circular 212 Method)

I/S #:	North-South Street:	Arleta Avenue	Year of Count:	2015	Ambient Growth: (%):	1.5	Conducted by:	City Traffic Counters	Date:	4/24/2015
CMA1	East-West Street:	Devonshire Street	Projection Year:	2018	Peak Hour:	AM	Reviewed by:		Project:	Pacoima Reservoir Project/1-13-4

No. of Phases			3			3			3			3			3			3
Opposed Ø'ing: N/S-1, E/W-2 or Both-3?			0			0			0			0			0			0
Right Turns: FREE-1, NRTOR-2 or OLA-3?	NB-- 0	SB--	3	NB-- 0	SB--	3	NB-- 0	SB--	3	NB-- 0	SB--	3	NB-- 0	SB--	3	NB-- 0	SB--	3
	EB-- 0	WB--	0	EB-- 0	WB--	0	EB-- 0	WB--	0	EB-- 0	WB--	0	EB-- 0	WB--	0	EB-- 0	WB--	0
ATSAC-1 or ATSAC+ATCS-2?			2			2			2			2			2			2
Override Capacity			0			0			0			0			0			0

	MOVEMENT	EXISTING CONDITION			EXISTING PLUS PROJECT			FUTURE CONDITION W/O PROJECT				FUTURE CONDITION W/ PROJECT				FUTURE W/ PROJECT W/ MITIGATION			
		Volume	No. of Lanes	Lane Volume	Project Traffic	Total Volume	Lane Volume	Added Volume	Total Volume	No. of Lanes	Lane Volume	Added Volume	Total Volume	No. of Lanes	Lane Volume	Added Volume	Total Volume	No. of Lanes	Lane Volume
NORTHBOUND	Left	0	0	0	0	0	0	0	0	0	0	0	0	0	0	0	0	0	0
	Left-Through		0							0				0				0	
	Through	0	0	**0**	0	0	**0**	0	0	0	**0**	0	0	0	**0**	0	0	0	**0**
	Through-Right		0							0				0				0	
	Right	0	0	0	0	0	0	0	0	0	0	0	0	0	0	0	0	0	0
	Left-Through-Right		0							0				0				0	
	Left-Right		0							0				0				0	
SOUTHBOUND	Left	557	1	**318**	0	557	**335**	0	582	1	**333**	0	582	1	**349**	0	582	1	**349**
	Left-Through		0							0				0				0	
	Through	0	0	0	0	0	0	0	0	0	0	0	0	0	0	0	0	0	0
	Through-Right		0							0				0				0	
	Right	398	1	0	50	448	0	0	416	1	0	50	466	1	0	0	466	1	0
	Left-Through-Right		0							0				0				0	
	Left-Right		1							1				1				1	
EASTBOUND	Left	331	1	**331**	50	381	**381**	0	346	1	**346**	50	396	1	**396**	0	396	1	**396**
	Left-Through		0							0				0				0	
	Through	994	2	497	1	995	498	6	1045	2	523	1	1046	2	523	0	1046	2	523
	Through-Right		0							0				0				0	
	Right	0	0	0	0	0	0	0	0	0	0	0	0	0	0	0	0	0	0
	Left-Through-Right		0							0				0				0	
	Left-Right		0							0				0				0	
WESTBOUND	Left	0	0	0	0	0	0	0	0	0	0	0	0	0	0	0	0	0	0
	Left-Through		0							0				0				0	
	Through	592	2	**296**	1	593	**297**	6	625	2	**313**	1	626	2	**313**	0	626	2	**313**
	Through-Right		0							0				0				0	
	Right	260	1	101	0	260	93	0	272	1	106	0	272	1	98	0	272	1	98
	Left-Through-Right		0							0				0				0	
	Left-Right		0							0				0				0	
CRITICAL VOLUMES		*North-South:*		318	*North-South:*		335	*North-South:*			333	*North-South:*			349	*North-South:*			349
		East-West:		627	*East-West:*		678	*East-West:*			659	*East-West:*			709	*East-West:*			709
		SUM:		945	*SUM:*		1013	*SUM:*			992	*SUM:*			1058	*SUM:*			1058
VOLUME/CAPACITY *(V/C)* RATIO:				0.663			0.711				0.696				0.742				0.742
V/C LESS ATSAC/ATCS ADJUSTMENT:				**0.563**			**0.611**				**0.596**				**0.642**				**0.642**
LEVEL OF SERVICE (LOS):				**A**			**B**				**A**				**B**				**B**

REMARKS: Alt. Route 1: Concurrent Use of All Three Disposal Sites

Version: 1i Beta; 8/4/2011

PROJECT IMPACT

Change in *v/c* due to project:	0.046	Δ*v/c* after mitigation:	0.046
Significant impacted?	NO	Fully mitigated?	N/A

Level of Service Workheet
(Circular 212 Method)

I/S #:	North-South Street:	Arleta Avenue	Year of Count:	2015	Ambient Growth: (%):	1.5	Conducted by:	City Traffic Counters	Date:	4/24/2015
CMA1	East-West Street:	Devonshire Street	Projection Year:	2018	Peak Hour:	Mid-Day	Reviewed by:		Project:	Pacoima Reservoir Project/1-13-4

No. of Phases				3				3				3				3				3	
Opposed Ø'ing: N/S-1, E/W-2 or Both-3?				0				0				0				0				0	
Right Turns: FREE-1, NRTOR-2 or OLA-3?	NB--	0	SB--	3	NB--	0	SB--	3	NB--	0	SB--	3	NB--	0	SB--	3	NB--	0	SB--	3	
	EB--	0	WB--	0	EB--	0	WB--	0	EB--	0	WB--	0	EB--	0	WB--	0	EB--	0	WB--	0	
ATSAC-1 or ATSAC+ATCS-2?				2				2				2				2				2	
Override Capacity				0				0				0				0				0	

MOVEMENT		EXISTING CONDITION			EXISTING PLUS PROJECT			FUTURE CONDITION W/O PROJECT				FUTURE CONDITION W/ PROJECT				FUTURE W/ PROJECT W/ MITIGATION			
		Volume	No. of Lanes	Lane Volume	Project Traffic	Total Volume	Lane Volume	Added Volume	Total Volume	No. of Lanes	Lane Volume	Added Volume	Total Volume	No. of Lanes	Lane Volume	Added Volume	Total Volume	No. of Lanes	Lane Volume
NORTHBOUND	Left	0	0	0	0	0	0	0	0	0	0	0	0	0	0	0	0	0	0
	Left-Through		0							0				0				0	
	Through	0	0	**0**	0	0	**0**	0	0	0	**0**	0	0	0	**0**	0	0	0	**0**
	Through-Right		0							0				0				0	
	Right	0	0	0	0	0	0	0	0	0	0	0	0	0	0	0	0	0	0
	Left-Through-Right		0							0				0				0	
	Left-Right		0							0				0				0	
SOUTHBOUND	Left	98	1	**98**	0	98	**98**	0	102	1	**102**	0	102	1	**102**	0	102	1	**102**
	Left-Through		0							0				0				0	
	Through	0	0	0	0	0	0	0	0	0	0	0	0	0	0	0	0	0	0
	Through-Right		0							0				0				0	
	Right	220	1	0	50	270	0	0	230	1	0	50	280	1	0	0	280	1	0
	Left-Through-Right		0							0				0				0	
	Left-Right		1							1				1				1	
EASTBOUND	Left	224	1	**224**	50	274	**274**	0	234	1	**234**	50	284	1	**284**	0	284	1	**284**
	Left-Through		0							0				0				0	
	Through	293	2	147	1	294	147	3	309	2	155	1	310	2	155	0	310	2	155
	Through-Right		0							0				0				0	
	Right	2	0	0	0	2	0	0	2	0	0	0	2	0	0	0	2	0	0
	Left-Through-Right		0							0				0				0	
	Left-Right		0							0				0				0	
WESTBOUND	Left	0	0	0	0	0	0	0	0	0	0	0	0	0	0	0	0	0	0
	Left-Through		0							0				0				0	
	Through	302	2	**151**	1	303	**152**	3	319	2	**160**	1	320	2	**160**	0	320	2	**160**
	Through-Right		0							0				0				0	
	Right	142	1	93	0	142	93	0	148	1	97	0	148	1	97	0	148	1	97
	Left-Through-Right		0							0				0				0	
	Left-Right		0							0				0				0	
CRITICAL VOLUMES			*North-South:*	98		*North-South:*	98			*North-South:*	102			*North-South:*	102			*North-South:*	102
			East-West:	375		*East-West:*	426			*East-West:*	394			*East-West:*	444			*East-West:*	444
			SUM:	473		*SUM:*	524			*SUM:*	496			*SUM:*	546			*SUM:*	546
VOLUME/CAPACITY *(V/C)* RATIO:				0.332			0.368				0.348				0.383				0.383
V/C LESS ATSAC/ATCS ADJUSTMENT:				**0.232**			**0.268**				**0.248**				**0.283**				**0.283**
LEVEL OF SERVICE (LOS):				**A**			**A**				**A**				**A**				**A**

REMARKS: Alt. Route 1: Concurrent Use of All Three Disposal Sites

Version: 1i Beta; 8/4/2011

PROJECT IMPACT

Change in *v/c* due to project:	0.035	Δ*v/c* after mitigation:	0.035
Significant impacted?	NO	Fully mitigated?	N/A

Level of Service Workheet
(Circular 212 Method)

I/S #:	North-South Street:	Arleta Avenue	Year of Count:	2015	Ambient Growth: (%):	1.5	Conducted by:	City Traffic Counters	Date:	4/24/2015
CMA1	East-West Street:	Devonshire Street	Projection Year:	2018	Peak Hour:	PM	Reviewed by:		Project:	Pacoima Reservoir Project/1-13-4

	Existing Condition	Existing Plus Project	Future Condition W/O Project	Future Condition W/ Project	Future W/ Project W/ Mitigation
No. of Phases	3	3	3	3	3
Opposed Ø'ing: N/S-1, E/W-2 or Both-3?	0	0	0	0	0
Right Turns: FREE-1, NRTOR-2 or OLA-3?	NB-- 0 SB-- 3 EB-- 0 WB-- 0	NB-- 0 SB-- 3 EB-- 0 WB-- 0	NB-- 0 SB-- 3 EB-- 0 WB-- 0	NB-- 0 SB-- 3 EB-- 0 WB-- 0	NB-- 0 SB-- 3 EB-- 0 WB-- 0
ATSAC-1 or ATSAC+ATCS-2?	2	2	2	2	2
Override Capacity	0	0	0	0	0

MOVEMENT		Existing Condition Volume	No. of Lanes	Lane Volume	Existing Plus Project Project Traffic	Total Volume	Lane Volume	Future Condition W/O Project Added Volume	Total Volume	No. of Lanes	Lane Volume	Future Condition W/ Project Added Volume	Total Volume	No. of Lanes	Lane Volume	Future W/ Project W/ Mitigation Added Volume	Total Volume	No. of Lanes	Lane Volume
NORTHBOUND	Left	0	0	0	0	0	0	0	0	0	0	0	0	0	0	0	0	0	0
	Left-Through		0							0				0				0	
	Through	0	0	**0**	0	0	**0**	0	0	0	**0**	0	0	0	**0**	0	0	0	**0**
	Through-Right		0							0				0				0	
	Right	0	0	0	0	0	0	0	0	0	0	0	0	0	0	0	0	0	0
	Left-Through-Right		0							0				0				0	
	Left-Right		0							0				0				0	
SOUTHBOUND	Left	216	1	**162**	0	216	**179**	0	226	1	**170**	0	226	1	**186**	0	226	1	**186**
	Left-Through		0							0				0				0	
	Through	0	0	0	0	0	0	0	0	0	0	0	0	0	0	0	0	0	0
	Through-Right		0							0				0				0	
	Right	271	1	0	50	321	0	0	283	1	0	50	333	1	0	0	333	1	0
	Left-Through-Right		0							0				0				0	
	Left-Right		1							1				1				1	
EASTBOUND	Left	420	1	**420**	50	470	**470**	0	439	1	**439**	50	489	1	**489**	0	489	1	**489**
	Left-Through		0							0				0				0	
	Through	498	2	249	1	499	250	4	525	2	263	1	526	2	263	0	526	2	263
	Through-Right		0							0				0				0	
	Right	0	0	0	0	0	0	0	0	0	0	0	0	0	0	0	0	0	0
	Left-Through-Right		0							0				0				0	
	Left-Right		0							0				0				0	
WESTBOUND	Left	0	0	0	0	0	0	0	0	0	0	0	0	0	0	0	0	0	0
	Left-Through		0							0				0				0	
	Through	436	2	218	1	437	219	5	461	2	231	1	462	2	231	0	462	2	231
	Through-Right		0							0				0				0	
	Right	350	1	**269**	0	350	**261**	0	366	1	**281**	0	366	1	**273**	0	366	1	**273**
	Left-Through-Right		0							0				0				0	
	Left-Right		0							0				0				0	
CRITICAL VOLUMES		*North-South:*		162	*North-South:*		179	*North-South:*			170	*North-South:*			186	*North-South:*			186
		East-West:		689	*East-West:*		731	*East-West:*			720	*East-West:*			762	*East-West:*			762
		SUM:		851	*SUM:*		910	*SUM:*			890	*SUM:*			948	*SUM:*			948
VOLUME/CAPACITY *(V/C)* RATIO:				0.597			0.639				0.625				0.665				0.665
V/C LESS ATSAC/ATCS ADJUSTMENT:				**0.497**			**0.539**				**0.525**				**0.565**				**0.565**
LEVEL OF SERVICE (LOS):				**A**			**A**				**A**				**A**				**A**

REMARKS: Alt. Route 1: Concurrent Use of All Three Disposal Sites

Version: 1i Beta; 8/4/2011

PROJECT IMPACT

Change in *v/c* due to project:	0.040	Δ*v/c* after mitigation:	0.040
Significant impacted?	NO	Fully mitigated?	N/A

Level of Service Workheet
(Circular 212 Method)

I/S #:	North-South Street:	Arleta Avenue	Year of Count:	2015	Ambient Growth: (%):	1.5	Conducted by:	City Traffic Counters	Date:	8/13/2015
CMA2	East-West Street:	Paxton Street	Projection Year:	2018	Peak Hour:	AM	Reviewed by:		Project:	Pacoima Reservoir Project/1-13-4

No. of Phases				0				0				0				0				0	
Opposed Ø'ing: N/S-1, E/W-2 or Both-3?				0				0				0				0				0	
Right Turns: FREE-1, NRTOR-2 or OLA-3?	NB--	0	SB--	0	NB--	0	SB--	0	NB--	0	SB--	0	NB--	0	SB--	0	NB--	0	SB--	0	
	EB--	0	WB--	0	EB--	0	WB--	0	EB--	0	WB--	0	EB--	0	WB--	0	EB--	0	WB--	0	
ATSAC-1 or ATSAC+ATCS-2?				0				0				0				0				0	
Override Capacity				1425				1425				1425				1425				1425	

	MOVEMENT	EXISTING CONDITION			EXISTING PLUS PROJECT			FUTURE CONDITION W/O PROJECT				FUTURE CONDITION W/ PROJECT				FUTURE W/ PROJECT W/ MITIGATION			
		Volume	No. of Lanes	Lane Volume	Project Traffic	Total Volume	Lane Volume	Added Volume	Total Volume	No. of Lanes	Lane Volume	Added Volume	Total Volume	No. of Lanes	Lane Volume	Added Volume	Total Volume	No. of Lanes	Lane Volume
NORTHBOUND	Left	0	0	0	0	0	0	0	0	0	0	0	0	0	0	0	0	0	0
	Left-Through		0							0				0				0	
	Through	86	1	86	0	86	86	0	90	1	90	0	90	1	90	0	90	1	90
	Through-Right		1							1				1				1	
	Right	516	0	**332**	50	566	**368**	0	540	0	**347**	50	590	0	**383**	0	590	0	**383**
	Left-Through-Right		0							0				0				0	
	Left-Right		0							0				0				0	
SOUTHBOUND	Left	177	1	**177**	0	177	**177**	2	187	1	**187**	0	187	1	**187**	0	187	1	**187**
	Left-Through		0							0				0				0	
	Through	231	2	116	0	231	116	0	242	2	121	0	242	2	121	0	242	2	121
	Through-Right		0							0				0				0	
	Right	0	0	0	0	0	0	0	0	0	0	0	0	0	0	0	0	0	0
	Left-Through-Right		0							0				0				0	
	Left-Right		0							0				0				0	
EASTBOUND	Left	0	0	0	0	0	0	0	0	0	0	0	0	0	0	0	0	0	0
	Left-Through		0							0				0				0	
	Through	0	0	**0**	0	0	**0**	0	0	0	**0**	0	0	0	**0**	0	0	0	**0**
	Through-Right		0							0				0				0	
	Right	0	0	0	0	0	0	0	0	0	0	0	0	0	0	0	0	0	0
	Left-Through-Right		0							0				0				0	
	Left-Right		0							0				0				0	
WESTBOUND	Left	671	2	**369**	50	721	**397**	0	702	2	**386**	50	752	2	**414**	0	752	2	**414**
	Left-Through		0							0				0				0	
	Through	0	0	0	0	0	0	0	0	0	0	0	0	0	0	0	0	0	0
	Through-Right		0							0				0				0	
	Right	82	1	0	0	82	0	3	89	1	0	0	89	1	0	0	89	1	0
	Left-Through-Right		0							0				0				0	
	Left-Right		0							0				0				0	
CRITICAL VOLUMES			*North-South:*	509		*North-South:*	545		*North-South:*	534			*North-South:*	570			*North-South:*	570	
			East-West:	369		*East-West:*	397		*East-West:*	386			*East-West:*	414			*East-West:*	414	
			SUM:	878		*SUM:*	942		*SUM:*	920			*SUM:*	984			*SUM:*	984	
VOLUME/CAPACITY *(V/C)* RATIO:				0.616			0.661			0.646				0.691				0.691	
V/C LESS ATSAC/ATCS ADJUSTMENT:				0.616			0.661			0.646				0.691				0.691	
LEVEL OF SERVICE (LOS):				**B**			**B**			**B**				**B**				**B**	

REMARKS: Alt. Route 1: Concurrent Use of All Three Disposal Sites. Based on field observations, over 1,750 vehicles currently traverse through the intersection during the peak hour. Fewer turning movements occur at the intersection due to the "T" intersection configuration. In addition, two primary movements which are complementary (i.e., NBRT/WBLT) occur during peak hours and are non-conflicting moves. A capacity of 1,425 vph is therefore utilized.

Version: 1i Beta; 8/4/2011

PROJECT IMPACT

Change in *v/c* due to project:	0.045	**Δ*v/c* after mitigation:**	0.045
Significant impacted?	NO	**Fully mitigated?**	N/A

Level of Service Workheet
(Circular 212 Method)

I/S #:	North-South Street:	Arleta Avenue	Year of Count:	2015	Ambient Growth: (%):	1.5	Conducted by:	City Traffic Counters	Date:	8/13/2015
CMA2	East-West Street:	Paxton Street	Projection Year:	2018	Peak Hour:	Mid-Day	Reviewed by:		Project:	Pacoima Reservoir Project/1-13-4

No. of Phases				0				0				0				0				0	
Opposed Ø'ing: N/S-1, E/W-2 or Both-3?				0				0				0				0				0	
Right Turns: FREE-1, NRTOR-2 or OLA-3?	NB--	0	SB--	0	NB--	0	SB--	0	NB--	0	SB--	0	NB--	0	SB--	0	NB--	0	SB--	0	
	EB--	0	WB--	0	EB--	0	WB--	0	EB--	0	WB--	0	EB--	0	WB--	0	EB--	0	WB--	0	
ATSAC-1 or ATSAC+ATCS-2?				0				0				0				0				0	
Override Capacity				1425				1425				1425				1425				1425	

	MOVEMENT	EXISTING CONDITION			EXISTING PLUS PROJECT			FUTURE CONDITION W/O PROJECT				FUTURE CONDITION W/ PROJECT				FUTURE W/ PROJECT W/ MITIGATION			
		Volume	No. of Lanes	Lane Volume	Project Traffic	Total Volume	Lane Volume	Added Volume	Total Volume	No. of Lanes	Lane Volume	Added Volume	Total Volume	No. of Lanes	Lane Volume	Added Volume	Total Volume	No. of Lanes	Lane Volume
NORTHBOUND	Left	0	0	0	0	0	0	0	0	0	0	0	0	0	0	0	0	0	0
	Left-Through		0							0				0				0	
	Through	50	1	50	0	50	50	0	52	1	52	0	52	1	52	0	52	1	52
	Through-Right		1							1				1				1	
	Right	309	0	**235**	50	359	**271**	0	323	0	**245**	50	373	0	**282**	0	373	0	**282**
	Left-Through-Right		0							0				0				0	
	Left-Right		0							0				0				0	
SOUTHBOUND	Left	82	1	**82**	0	82	**82**	3	89	1	**89**	0	89	1	**89**	0	89	1	**89**
	Left-Through		0							0				0				0	
	Through	44	2	22	0	44	22	0	46	2	23	0	46	2	23	0	46	2	23
	Through-Right		0							0				0				0	
	Right	0	0	0	0	0	0	0	0	0	0	0	0	0	0	0	0	0	0
	Left-Through-Right		0							0				0				0	
	Left-Right		0							0				0				0	
EASTBOUND	Left	0	0	0	0	0	0	0	0	0	0	0	0	0	0	0	0	0	0
	Left-Through		0							0				0				0	
	Through	0	0	**0**	0	0	**0**	0	0	0	**0**	0	0	0	**0**	0	0	0	**0**
	Through-Right		0							0				0				0	
	Right	0	0	0	0	0	0	0	0	0	0	0	0	0	0	0	0	0	0
	Left-Through-Right		0							0				0				0	
	Left-Right		0							0				0				0	
WESTBOUND	Left	271	2	**149**	50	321	**177**	0	283	2	**156**	50	333	2	**183**	0	333	2	**183**
	Left-Through		0							0				0				0	
	Through	0	0	0	0	0	0	0	0	0	0	0	0	0	0	0	0	0	0
	Through-Right		0							0				0				0	
	Right	108	1	67	0	108	67	3	116	1	72	0	116	1	72	0	116	1	72
	Left-Through-Right		0							0				0				0	
	Left-Right		0							0				0				0	
CRITICAL VOLUMES		*North-South:*		317	*North-South:*		353	*North-South:*			334	*North-South:*			371	*North-South:*			371
		East-West:		149	*East-West:*		177	*East-West:*			156	*East-West:*			183	*East-West:*			183
		SUM:		466	*SUM:*		530	*SUM:*			490	*SUM:*			554	*SUM:*			554
VOLUME/CAPACITY *(V/C)* RATIO:				0.327			0.372				0.344				0.389				0.389
V/C LESS ATSAC/ATCS ADJUSTMENT:				0.327			0.372				0.344				0.389				0.389
LEVEL OF SERVICE (LOS):				A			A				A				A				A

REMARKS: Alt. Route 1: Concurrent Use of All Three Disposal Sites. Based on field observations, over 1,750 vehicles currently traverse through the intersection during the peak hour. Fewer turning movements occur at the intersection due to the "T" intersection configuration. In addition, two primary movements which are complementary (i.e., NBRT/WBLT) occur during peak hours and are non-conflicting moves. A capacity of 1,425 vph is therefore utilized.

Version: 1i Beta; 8/4/2011

PROJECT IMPACT

Change in *v/c* due to project:	0.045	Δ*v/c* after mitigation:	0.045
Significant impacted?	NO	Fully mitigated?	N/A

Level of Service Workheet
(Circular 212 Method)

I/S #:	North-South Street:	Arleta Avenue	Year of Count:	2015	Ambient Growth: (%):	1.5	Conducted by:	City Traffic Counters	Date:	8/13/2015
CMA2	East-West Street:	Paxton Street	Projection Year:	2018	Peak Hour:	PM	Reviewed by:		Project:	Pacoima Reservoir Project/1-13-4

No. of Phases				0				0				0				0				0			
Opposed Ø'ing: N/S-1, E/W-2 or Both-3?				0				0				0				0				0			
Right Turns: FREE-1, NRTOR-2 or OLA-3?	NB--	0	SB--	0	NB--	0	SB--	0	NB--	0	SB--	0	NB--	0	SB--	0	NB--	0	SB--	0	NB--	0	SB--	0
	EB--	0	WB--	0	EB--	0	WB--	0	EB--	0	WB--	0	EB--	0	WB--	0	EB--	0	WB--	0	EB--	0	WB--	0
ATSAC-1 or ATSAC+ATCS-2?				0				0				0				0				0			
Override Capacity				1425				1425				1425				1425				1425

MOVEMENT		EXISTING CONDITION			EXISTING PLUS PROJECT			FUTURE CONDITION W/O PROJECT				FUTURE CONDITION W/ PROJECT				FUTURE W/ PROJECT W/ MITIGATION			
		Volume	No. of Lanes	Lane Volume	Project Traffic	Total Volume	Lane Volume	Added Volume	Total Volume	No. of Lanes	Lane Volume	Added Volume	Total Volume	No. of Lanes	Lane Volume	Added Volume	Total Volume	No. of Lanes	Lane Volume
NORTHBOUND	Left	0	0	0	0	0	0	0	0	0	0	0	0	0	0	0	0	0	0
	Left-Through		0							0				0				0	
	Through	132	1	132	0	132	132	0	138	1	138	0	138	1	138	0	138	1	138
	Through-Right		1							1				1				1	
	Right	644	0	**524**	50	694	**560**	0	673	0	**548**	50	723	0	**584**	0	723	0	**584**
	Left-Through-Right		0							0				0				0	
	Left-Right		0							0				0				0	
SOUTHBOUND	Left	85	1	**85**	0	85	**85**	3	92	1	**92**	0	92	1	**92**	0	92	1	**92**
	Left-Through		0							0				0				0	
	Through	70	2	35	0	70	35	0	73	2	37	0	73	2	37	0	73	2	37
	Through-Right		0							0				0				0	
	Right	0	0	0	0	0	0	0	0	0	0	0	0	0	0	0	0	0	0
	Left-Through-Right		0							0				0				0	
	Left-Right		0							0				0				0	
EASTBOUND	Left	0	0	0	0	0	0	0	0	0	0	0	0	0	0	0	0	0	0
	Left-Through		0							0				0				0	
	Through	0	0	**0**	0	0	**0**	0	0	0	**0**	0	0	0	**0**	0	0	0	**0**
	Through-Right		0							0				0				0	
	Right	0	0	0	0	0	0	0	0	0	0	0	0	0	0	0	0	0	0
	Left-Through-Right		0							0				0				0	
	Left-Right		0							0				0				0	
WESTBOUND	Left	437	2	**240**	50	487	**268**	0	457	2	**251**	50	507	2	**279**	0	507	2	**279**
	Left-Through		0							0				0				0	
	Through	0	0	0	0	0	0	0	0	0	0	0	0	0	0	0	0	0	0
	Through-Right		0							0				0				0	
	Right	105	1	63	0	105	63	3	113	1	67	0	113	1	67	0	113	1	67
	Left-Through-Right		0							0				0				0	
	Left-Right		0							0				0				0	
CRITICAL VOLUMES			*North-South:*	609		*North-South:*	645		*North-South:*	640			*North-South:*	676			*North-South:*	676
			East-West:	240		*East-West:*	268		*East-West:*	251			*East-West:*	279			*East-West:*	279
			SUM:	849		*SUM:*	913		*SUM:*	891			*SUM:*	955			*SUM:*	955
VOLUME/CAPACITY *(V/C)* RATIO:				0.596			0.641			0.625				0.670				0.670
V/C LESS ATSAC/ATCS ADJUSTMENT:				0.596			0.641			0.625				0.670				0.670
LEVEL OF SERVICE (LOS):				**A**			**B**			**B**				**B**				**B**

REMARKS: Alt. Route 1: Concurrent Use of All Three Disposal Sites. Based on field observations, over 1,750 vehicles currently traverse through the intersection during the peak hour. Fewer turning movements occur at the intersection due to the "T" intersection configuration. In addition, two primary movements which are complementary (i.e., NBRT/WBLT) occur during peak hours and are non-conflicting moves. A capacity of 1,425 vph is therefore utilized.

Version: 1i Beta; 8/4/2011

PROJECT IMPACT

Change in *v/c* due to project:	0.045	**Δ*v/c* after mitigation:**	0.045
Significant impacted?	NO	**Fully mitigated?**	N/A

Level of Service Workheet
(Circular 212 Method)

I/S #:	North-South Street:	I-5 Freeway SB Ramps	Year of Count:	2015	Ambient Growth: (%):	1.5	Conducted by:	City Traffic Counters	Date:	4/24/2015
CMA3	East-West Street:	Paxton Street	Projection Year:	2018	Peak Hour:	AM	Reviewed by:		Project:	Pacoima Reservoir Project/1-13-4

	EXISTING CONDITION			EXISTING PLUS PROJECT			FUTURE CONDITION W/O PROJECT				FUTURE CONDITION W/ PROJECT				FUTURE W/ PROJECT W/ MITIGATION			
No. of Phases			0			0				0				0				0
Opposed Ø'ing: N/S-1, E/W-2 or Both-3?			0			0				0				0				0
Right Turns: FREE-1, NRTOR-2 or OLA-3?	NB-- 0	SB--	0	NB-- 0	SB--	0	NB-- 0	SB--	0		NB-- 0	SB--	0		NB-- 0	SB--	0	
	EB-- 0	WB--	0	EB-- 0	WB--	0	EB-- 0	WB--	0		EB-- 0	WB--	0		EB-- 0	WB--	0	
ATSAC-1 or ATSAC+ATCS-2?			0			0				0				0				0
Override Capacity			1200			1200				1200				1200				1200

	MOVEMENT	EXISTING CONDITION Volume	No. of Lanes	Lane Volume	EXISTING PLUS PROJECT Project Traffic	Total Volume	Lane Volume	FUTURE CONDITION W/O PROJECT Added Volume	Total Volume	No. of Lanes	Lane Volume	FUTURE CONDITION W/ PROJECT Added Volume	Total Volume	No. of Lanes	Lane Volume	FUTURE W/ PROJECT W/ MITIGATION Added Volume	Total Volume	No. of Lanes	Lane Volume
NORTHBOUND	Left	2	0	**2**	0	2	**2**	0	2	0	**2**	0	2	0	**2**	0	2	0	**2**
	Left-Through		0							0				0				0	
	Through	2	0	103	0	2	103	0	2	0	111	0	2	0	111	0	2	0	111
	Through-Right		0							0				0				0	
	Right	99	0	0	0	99	0	3	107	0	0	0	107	0	0	0	107	0	0
	Left-Through-Right		1							1				1				1	
	Left-Right		0							0				0				0	
SOUTHBOUND	Left	124	0	124	0	124	124	1	131	0	131	0	131	0	131	0	131	0	131
	Left-Through		1							1				1				1	
	Through	11	0	135	0	11	135	0	12	0	143	0	12	0	143	0	12	0	143
	Through-Right		0							0				0				0	
	Right	373	1	**280**	0	373	**265**	1	391	1	**294**	0	391	1	**279**	0	391	1	**279**
	Left-Through-Right		0							0				0				0	
	Left-Right		0							0				0				0	
EASTBOUND	Left	186	1	**186**	30	216	**216**	1	195	1	**195**	30	225	1	**225**	0	225	1	**225**
	Left-Through		0							0				0				0	
	Through	526	1	264	20	546	274	2	552	1	277	20	572	1	287	0	572	1	287
	Through-Right		1							1				1				1	
	Right	1	0	1	0	1	1	0	1	0	1	0	1	0	1	0	1	0	1
	Left-Through-Right		0							0				0				0	
	Left-Right		0							0				0				0	
WESTBOUND	Left	35	1	35	0	35	35	3	40	1	40	0	40	1	40	0	40	1	40
	Left-Through		0							0				0				0	
	Through	363	1	**317**	50	413	**342**	2	382	1	**333**	50	432	1	**358**	0	432	1	**358**
	Through-Right		1							1				1				1	
	Right	270	0	270	0	270	270	1	283	0	283	0	283	0	283	0	283	0	283
	Left-Through-Right		0							0				0				0	
	Left-Right		0							0				0				0	
CRITICAL VOLUMES		*North-South:*		282	*North-South:*		267	*North-South:*			296	*North-South:*			281	*North-South:*			281
		East-West:		503	*East-West:*		558	*East-West:*			528	*East-West:*			583	*East-West:*			583
		SUM:		785	*SUM:*		825	*SUM:*			824	*SUM:*			864	*SUM:*			864
VOLUME/CAPACITY *(V/C)* RATIO:				0.654			0.688				0.687				0.720				0.720
V/C LESS ATSAC/ATCS ADJUSTMENT:				0.654			0.688				0.687				0.720				0.720
LEVEL OF SERVICE (LOS):				**B**			**B**				**B**				**C**				**C**

REMARKS: Alt. Route 1: Concurrent Use of All Three Disposal Sites

Version: 1i Beta; 8/4/2011

PROJECT IMPACT

Change in *v/c* due to project:	0.033	Δ*v/c* after mitigation:	0.033
Significant impacted?	NO	Fully mitigated?	N/A

Level of Service Workheet
(Circular 212 Method)

I/S #:	North-South Street:	I-5 Freeway SB Ramps	Year of Count:	2015	Ambient Growth: (%):	1.5	Conducted by:	City Traffic Counters	Date:	4/24/2015
CMA3	East-West Street:	Paxton Street	Projection Year:	2018	Peak Hour:	Mid-Day	Reviewed by:		Project:	Pacoima Reservoir Project/1-13-4

No. of Phases				0				0				0				0				0			
Opposed Ø'ing: N/S-1, E/W-2 or Both-3?				0				0				0				0				0			
Right Turns: FREE-1, NRTOR-2 or OLA-3?	NB--	0	SB--	0	NB--	0	SB--	0	NB--	0	SB--	0	NB--	0	SB--	0	NB--	0	SB--	0			
	EB--	0	WB--	0	EB--	0	WB--	0	EB--	0	WB--	0	EB--	0	WB--	0	EB--	0	WB--	0			
ATSAC-1 or ATSAC+ATCS-2?				0				0				0				0				0			
Override Capacity				1200				1200				1200				1200				1200			

	MOVEMENT	EXISTING CONDITION			EXISTING PLUS PROJECT			FUTURE CONDITION W/O PROJECT				FUTURE CONDITION W/ PROJECT				FUTURE W/ PROJECT W/ MITIGATION			
		Volume	No. of Lanes	Lane Volume	Project Traffic	Total Volume	Lane Volume	Added Volume	Total Volume	No. of Lanes	Lane Volume	Added Volume	Total Volume	No. of Lanes	Lane Volume	Added Volume	Total Volume	No. of Lanes	Lane Volume
NORTHBOUND	Left	0	0	0	0	0	0	0	0	0	0	0	0	0	0	0	0	0	0
	Left-Through		0							0				0				0	
	Through	1	0	**37**	0	1	**37**	0	1	0	**39**	0	1	0	**39**	0	1	0	**39**
	Through-Right		0							0				0				0	
	Right	36	0	0	0	36	0	0	38	0	0	0	38	0	0	0	38	0	0
	Left-Through-Right		1							1				1				1	
	Left-Right		0							0				0				0	
SOUTHBOUND	Left	66	0	**66**	0	66	**66**	1	70	0	**70**	0	70	0	**70**	0	70	0	**70**
	Left-Through		1							1				1				1	
	Through	7	0	73	0	7	73	0	7	0	77	0	7	0	77	0	7	0	77
	Through-Right		0							0				0				0	
	Right	33	1	5	0	33	0	1	36	1	6	0	36	1	0	0	36	1	0
	Left-Through-Right		0							0				0				0	
	Left-Right		0							0				0				0	
EASTBOUND	Left	56	1	**56**	30	86	**86**	1	60	1	**60**	30	90	1	**90**	0	90	1	**90**
	Left-Through		0							0				0				0	
	Through	348	1	175	20	368	185	2	366	1	184	20	386	1	194	0	386	1	194
	Through-Right		1							1				1				1	
	Right	2	0	2	0	2	2	0	2	0	2	0	2	0	2	0	2	0	2
	Left-Through-Right		0							0				0				0	
	Left-Right		0							0				0				0	
WESTBOUND	Left	35	1	35	0	35	35	0	37	1	37	0	37	1	37	0	37	1	37
	Left-Through		0							0				0				0	
	Through	351	1	**209**	50	401	**234**	2	369	1	**220**	50	419	1	**245**	0	419	1	**245**
	Through-Right		1							1				1				1	
	Right	67	0	67	0	67	67	1	71	0	71	0	71	0	71	0	71	0	71
	Left-Through-Right		0							0				0				0	
	Left-Right		0							0				0				0	
CRITICAL VOLUMES		*North-South:*		103	*North-South:*		103	*North-South:*			109	*North-South:*			109	*North-South:*			109
		East-West:		265	*East-West:*		320	*East-West:*			280	*East-West:*			335	*East-West:*			335
		SUM:		368	*SUM:*		423	*SUM:*			389	*SUM:*			444	*SUM:*			444
VOLUME/CAPACITY *(V/C)* RATIO:				0.307			0.353				0.324				0.370				0.370
V/C LESS ATSAC/ATCS ADJUSTMENT:				0.307			0.353				0.324				0.370				0.370
LEVEL OF SERVICE (LOS):				A			A				A				A				A

REMARKS: Alt. Route 1: Concurrent Use of All Three Disposal Sites

Version: 1i Beta; 8/4/2011

PROJECT IMPACT

Change in *v/c* due to project:	0.046	Δ*v/c* after mitigation:	0.046
Significant impacted?	NO	Fully mitigated?	N/A

Level of Service Workheet
(Circular 212 Method)

I/S #:	North-South Street:	I-5 Freeway SB Ramps	Year of Count:	2015	Ambient Growth: (%):	1.5	Conducted by:	City Traffic Counters	Date:	4/24/2015
CMA3	East-West Street:	Paxton Street	Projection Year:	2018	Peak Hour:	PM	Reviewed by:		Project:	Pacoima Reservoir Project/1-13-4

No. of Phases				0				0				0				0				0			0
Opposed Ø'ing: N/S-1, E/W-2 or Both-3?				0				0				0				0				0			0
Right Turns: FREE-1, NRTOR-2 or OLA-3?	NB--	0	SB--	0	NB--	0	SB--	0	NB--	0	SB--	0	NB--	0	SB--	0	NB--	0	SB--	0	NB--	0	SB--	0
	EB--	0	WB--	0	EB--	0	WB--	0	EB--	0	WB--	0	EB--	0	WB--	0	EB--	0	WB--	0	EB--	0	WB--	0
ATSAC-1 or ATSAC+ATCS-2?				0				0				0				0				0				0
Override Capacity				1200				1200				1200				1200				1200				1200

	MOVEMENT	EXISTING CONDITION			EXISTING PLUS PROJECT			FUTURE CONDITION W/O PROJECT				FUTURE CONDITION W/ PROJECT				FUTURE W/ PROJECT W/ MITIGATION			
		Volume	No. of Lanes	Lane Volume	Project Traffic	Total Volume	Lane Volume	Added Volume	Total Volume	No. of Lanes	Lane Volume	Added Volume	Total Volume	No. of Lanes	Lane Volume	Added Volume	Total Volume	No. of Lanes	Lane Volume
NORTHBOUND	Left	1	0	1	0	1	1	0	1	0	1	0	1	0	1	0	1	0	1
	Left-Through		0							0				0				0	
	Through	2	0	**61**	0	2	**61**	0	2	0	**66**	0	2	0	**66**	0	2	0	**66**
	Through-Right		0							0				0				0	
	Right	58	0	0	0	58	0	2	63	0	0	0	63	0	0	0	63	0	0
	Left-Through-Right		1							1				1				1	
	Left-Right		0							0				0				0	
SOUTHBOUND	Left	145	0	**145**	0	145	**145**	1	153	0	**153**	0	153	0	**153**	0	153	0	**153**
	Left-Through		1							1				1				1	
	Through	14	0	159	0	14	159	0	15	0	168	0	15	0	168	0	15	0	168
	Through-Right		0							0				0				0	
	Right	117	1	88	0	117	73	1	123	1	92	0	123	1	77	0	123	1	77
	Left-Through-Right		0							0				0				0	
	Left-Right		0							0				0				0	
EASTBOUND	Left	58	1	58	30	88	88	1	62	1	62	30	92	1	92	0	92	1	92
	Left-Through		0							0				0				0	
	Through	672	1	**340**	20	692	**350**	2	705	1	**357**	20	725	1	**367**	0	725	1	**367**
	Through-Right		1							1				1				1	
	Right	8	0	8	0	8	8	0	8	0	8	0	8	0	8	0	8	0	8
	Left-Through-Right		0							0				0				0	
	Left-Right		0							0				0				0	
WESTBOUND	Left	71	1	**71**	0	71	**71**	2	76	1	**76**	0	76	1	**76**	0	76	1	**76**
	Left-Through		0							0				0				0	
	Through	409	1	245	50	459	270	2	430	1	258	50	480	1	283	0	480	1	283
	Through-Right		1							1				1				1	
	Right	81	0	81	0	81	81	1	86	0	86	0	86	0	86	0	86	0	86
	Left-Through-Right		0							0				0				0	
	Left-Right		0							0				0				0	
CRITICAL VOLUMES		*North-South:*		206	*North-South:*		206	*North-South:*			219	*North-South:*			219	*North-South:*			219
		East-West:		411	*East-West:*		421	*East-West:*			433	*East-West:*			443	*East-West:*			443
		SUM:		617	*SUM:*		627	*SUM:*			652	*SUM:*			662	*SUM:*			662
VOLUME/CAPACITY *(V/C)* RATIO:				0.514			0.523				0.543				0.552				0.552
V/C LESS ATSAC/ATCS ADJUSTMENT:				0.514			0.523				0.543				0.552				0.552
LEVEL OF SERVICE (LOS):				A			A				A				A				A

REMARKS: Alt. Route 1: Concurrent Use of All Three Disposal Sites

Version: 1i Beta; 8/4/2011

PROJECT IMPACT

Change in *v/c* due to project:	0.009	Δ*v/c* after mitigation:	0.009
Significant impacted?	NO	Fully mitigated?	N/A

Level of Service Workheet
(Circular 212 Method)

I/S #:	North-South Street:	I-5 Freeway NB Ramps	Year of Count:	2015	Ambient Growth: (%):	1.5	Conducted by:	City Traffic Counters	Date:	4/24/2015
CMA4	East-West Street:	Paxton Street	Projection Year:	2018	Peak Hour:	AM	Reviewed by:		Project:	Pacoima Reservoir Project/1-13-4

No. of Phases				0				0				0				0				0		
Opposed Ø'ing: N/S-1, E/W-2 or Both-3?				0				0				0				0				0		
Right Turns: FREE-1, NRTOR-2 or OLA-3?	NB--	0	SB--	0	NB--	0	SB--	0	NB--	0	SB--	0	NB--	0	SB--	0	NB--	0	SB--	0		
	EB--	0	WB--	0	EB--	0	WB--	0	EB--	0	WB--	0	EB--	0	WB--	0	EB--	0	WB--	0		
ATSAC-1 or ATSAC+ATCS-2?				0				0				0				0				0		
Override Capacity				1200				1200				1200				1200				1200		

MOVEMENT		EXISTING CONDITION			EXISTING PLUS PROJECT			FUTURE CONDITION W/O PROJECT				FUTURE CONDITION W/ PROJECT				FUTURE W/ PROJECT W/ MITIGATION			
		Volume	No. of Lanes	Lane Volume	Project Traffic	Total Volume	Lane Volume	Added Volume	Total Volume	No. of Lanes	Lane Volume	Added Volume	Total Volume	No. of Lanes	Lane Volume	Added Volume	Total Volume	No. of Lanes	Lane Volume
NORTHBOUND	Left	12	0	12	0	12	12	0	13	0	13	0	13	0	13	0	13	0	13
	Left-Through		0							0				0				0	
	Through	19	0	**105**	0	19	**105**	0	20	0	**113**	0	20	0	**113**	0	20	0	**113**
	Through-Right		0							0				0				0	
	Right	74	0	0	0	74	0	3	80	0	0	0	80	0	0	0	80	0	0
	Left-Through-Right		1							1				1				1	
	Left-Right		0							0				0				0	
SOUTHBOUND	Left	24	0	**24**	0	24	**24**	1	26	0	**26**	0	26	0	**26**	0	26	0	**26**
	Left-Through		1							1				1				1	
	Through	1	0	25	0	1	25	0	1	0	27	0	1	0	27	0	1	0	27
	Through-Right		0							0				0				0	
	Right	44	1	0	30	74	0	1	47	1	0	30	77	1	0	0	77	1	0
	Left-Through-Right		0							0				0				0	
	Left-Right		0							0				0				0	
EASTBOUND	Left	200	1	**200**	0	200	**200**	1	210	1	**210**	0	210	1	**210**	0	210	1	**210**
	Left-Through		0							0				0				0	
	Through	502	1	265	20	522	275	5	530	1	279	20	550	1	289	0	550	1	289
	Through-Right		1							1				1				1	
	Right	27	0	27	0	27	27	0	28	0	28	0	28	0	28	0	28	0	28
	Left-Through-Right		0							0				0				0	
	Left-Right		0							0				0				0	
WESTBOUND	Left	50	1	50	0	50	50	3	55	1	55	0	55	1	55	0	55	1	55
	Left-Through		0							0				0				0	
	Through	637	1	**368**	20	657	**378**	5	671	1	**388**	20	691	1	**398**	0	691	1	**398**
	Through-Right		1							1				1				1	
	Right	99	0	99	0	99	99	1	105	0	105	0	105	0	105	0	105	0	105
	Left-Through-Right		0							0				0				0	
	Left-Right		0							0				0				0	
CRITICAL VOLUMES		*North-South:*		129	*North-South:*		129	*North-South:*			139	*North-South:*			139	*North-South:*			139
		East-West:		568	*East-West:*		578	*East-West:*			598	*East-West:*			608	*East-West:*			608
		SUM:		697	*SUM:*		707	*SUM:*			737	*SUM:*			747	*SUM:*			747
VOLUME/CAPACITY *(V/C)* RATIO:				0.581			0.589				0.614				0.623				0.623
V/C LESS ATSAC/ATCS ADJUSTMENT:				0.581			0.589				0.614				0.623				0.623
LEVEL OF SERVICE (LOS):				A			A				B				B				B

REMARKS: Alt. Route 1: Concurrent Use of All Three Disposal Sites

Version: 1i Beta; 8/4/2011

PROJECT IMPACT

Change in *v/c* due to project:	0.009	Δ*v/c* after mitigation:	0.009
Significant impacted?	NO	Fully mitigated?	N/A

Level of Service Workheet
(Circular 212 Method)

I/S #:	North-South Street:	I-5 Freeway NB Ramps	Year of Count:	2015	Ambient Growth: (%):	1.5	Conducted by:	City Traffic Counters	Date:	4/24/2015
CMA4	East-West Street:	Paxton Street	Projection Year:	2018	Peak Hour:	Mid-Day	Reviewed by:		Project:	Pacoima Reservoir Project/1-13-4

No. of Phases				0				0				0				0				0			0
Opposed Ø'ing: N/S-1, E/W-2 or Both-3?				0				0				0				0				0			0
Right Turns: FREE-1, NRTOR-2 or OLA-3?	NB--	0	SB--	0	NB--	0	SB--	0	NB--	0	SB--	0	NB--	0	SB--	0	NB--	0	SB--	0	NB--	0	SB--	0
	EB--	0	WB--	0	EB--	0	WB--	0	EB--	0	WB--	0	EB--	0	WB--	0	EB--	0	WB--	0	EB--	0	WB--	0
ATSAC-1 or ATSAC+ATCS-2?				0				0				0				0				0				0
Override Capacity				1200				1200				1200				1200				1200				1200

MOVEMENT		EXISTING CONDITION			EXISTING PLUS PROJECT			FUTURE CONDITION W/O PROJECT				FUTURE CONDITION W/ PROJECT				FUTURE W/ PROJECT W/ MITIGATION			
		Volume	No. of Lanes	Lane Volume	Project Traffic	Total Volume	Lane Volume	Added Volume	Total Volume	No. of Lanes	Lane Volume	Added Volume	Total Volume	No. of Lanes	Lane Volume	Added Volume	Total Volume	No. of Lanes	Lane Volume
NORTHBOUND	Left	15	0	15	0	15	15	0	16	0	16	0	16	0	16	0	16	0	16
	Left-Through		0							0				0				0	
	Through	22	0	**70**	0	22	**70**	0	23	0	**74**	0	23	0	**74**	0	23	0	**74**
	Through-Right		0							0				0				0	
	Right	33	0	0	0	33	0	0	35	0	0	0	35	0	0	0	35	0	0
	Left-Through-Right		1							1				1				1	
	Left-Right		0							0				0				0	
SOUTHBOUND	Left	52	0	**52**	0	52	**52**	1	55	0	**55**	0	55	0	**55**	0	55	0	**55**
	Left-Through		1							1				1				1	
	Through	3	0	55	0	3	55	0	3	0	58	0	3	0	58	0	3	0	58
	Through-Right		0							0				0				0	
	Right	66	1	24	30	96	54	1	70	1	25	30	100	1	55	0	100	1	55
	Left-Through-Right		0							0				0				0	
	Left-Right		0							0				0				0	
EASTBOUND	Left	85	1	**85**	0	85	**85**	1	90	1	**90**	0	90	1	**90**	0	90	1	**90**
	Left-Through		0							0				0				0	
	Through	355	1	190	20	375	200	2	373	1	199	20	393	1	209	0	393	1	209
	Through-Right		1							1				1				1	
	Right	24	0	24	0	24	24	0	25	0	25	0	25	0	25	0	25	0	25
	Left-Through-Right		0							0				0				0	
	Left-Right		0							0				0				0	
WESTBOUND	Left	12	1	12	0	12	12	0	13	1	13	0	13	1	13	0	13	1	13
	Left-Through		0							0				0				0	
	Through	363	1	**229**	20	383	**239**	2	382	1	**241**	20	402	1	**251**	0	402	1	**251**
	Through-Right		1							1				1				1	
	Right	94	0	94	0	94	94	1	99	0	99	0	99	0	99	0	99	0	99
	Left-Through-Right		0							0				0				0	
	Left-Right		0							0				0				0	
CRITICAL VOLUMES		*North-South:*		122	*North-South:*		122	*North-South:*			129	*North-South:*			129	*North-South:*			129
		East-West:		314	*East-West:*		324	*East-West:*			331	*East-West:*			341	*East-West:*			341
		SUM:		436	*SUM:*		446	*SUM:*			460	*SUM:*			470	*SUM:*			470
VOLUME/CAPACITY *(V/C)* RATIO:				0.363			0.372				0.383				0.392				0.392
V/C LESS ATSAC/ATCS ADJUSTMENT:				0.363			0.372				0.383				0.392				0.392
LEVEL OF SERVICE (LOS):				A			A				A				A				A

REMARKS: Alt. Route 1: Concurrent Use of All Three Disposal Sites

Version: 1i Beta; 8/4/2011

PROJECT IMPACT

Change in *v/c* due to project:	0.009	Δ*v/c* after mitigation:	0.009
Significant impacted?	NO	Fully mitigated?	N/A

Level of Service Workheet
(Circular 212 Method)

I/S #:	North-South Street:	I-5 Freeway NB Ramps	Year of Count:	2015	Ambient Growth: (%):	1.5	Conducted by:	City Traffic Counters	Date:	4/24/2015
CMA4	East-West Street:	Paxton Street	Projection Year:	2018	Peak Hour:	PM	Reviewed by:		Project:	Pacoima Reservoir Project/1-13-4

No. of Phases				0				0				0				0				0			0
Opposed Ø'ing: N/S-1, E/W-2 or Both-3?				0				0				0				0				0			0
Right Turns: FREE-1, NRTOR-2 or OLA-3?	NB--	0	SB--	0	NB--	0	SB--	0	NB--	0	SB--	0	NB--	0	SB--	0	NB--	0	SB--	0	NB--	0	SB-- 0
	EB--	0	WB--	0	EB--	0	WB--	0	EB--	0	WB--	0	EB--	0	WB--	0	EB--	0	WB--	0	EB--	0	WB-- 0
ATSAC-1 or ATSAC+ATCS-2?				0				0				0				0				0			0
Override Capacity				1200				1200				1200				1200				1200			1200

	MOVEMENT	EXISTING CONDITION			EXISTING PLUS PROJECT			FUTURE CONDITION W/O PROJECT				FUTURE CONDITION W/ PROJECT				FUTURE W/ PROJECT W/ MITIGATION			
		Volume	No. of Lanes	Lane Volume	Project Traffic	Total Volume	Lane Volume	Added Volume	Total Volume	No. of Lanes	Lane Volume	Added Volume	Total Volume	No. of Lanes	Lane Volume	Added Volume	Total Volume	No. of Lanes	Lane Volume
NORTHBOUND	Left	6	0	6	0	6	6	0	6	0	6	0	6	0	6	0	6	0	6
	Left-Through		0							0				0				0	
	Through	8	0	**57**	0	8	**57**	0	8	0	**61**	0	8	0	**61**	0	8	0	**61**
	Through-Right		0							0				0				0	
	Right	43	0	0	0	43	0	2	47	0	0	0	47	0	0	0	47	0	0
	Left-Through-Right		1							1				1				1	
	Left-Right		0							0				0				0	
SOUTHBOUND	Left	69	0	**69**	0	69	**69**	1	73	0	**73**	0	73	0	**73**	0	73	0	**73**
	Left-Through		1							1				1				1	
	Through	6	0	75	0	6	75	0	6	0	79	0	6	0	79	0	6	0	79
	Through-Right		0							0				0				0	
	Right	57	1	0	30	87	0	1	61	1	0	30	91	1	0	0	91	1	0
	Left-Through-Right		0							0				0				0	
	Left-Right		0							0				0				0	
EASTBOUND	Left	226	1	**226**	0	226	**226**	1	237	1	**237**	0	237	1	**237**	0	237	1	**237**
	Left-Through		0							0				0				0	
	Through	623	1	322	20	643	332	4	655	1	338	20	675	1	348	0	675	1	348
	Through-Right		1							1				1				1	
	Right	20	0	20	0	20	20	0	21	0	21	0	21	0	21	0	21	0	21
	Left-Through-Right		0							0				0				0	
	Left-Right		0							0				0				0	
WESTBOUND	Left	14	1	14	0	14	14	2	17	1	17	0	17	1	17	0	17	1	17
	Left-Through		0							0				0				0	
	Through	489	1	**343**	20	509	**353**	4	515	1	**361**	20	535	1	**371**	0	535	1	**371**
	Through-Right		1							1				1				1	
	Right	197	0	197	0	197	197	1	207	0	207	0	207	0	207	0	207	0	207
	Left-Through-Right		0							0				0				0	
	Left-Right		0							0				0				0	
CRITICAL VOLUMES		*North-South:*		126	*North-South:*		126	*North-South:*			134	*North-South:*			134	*North-South:*			134
		East-West:		569	*East-West:*		579	*East-West:*			598	*East-West:*			608	*East-West:*			608
		SUM:		695	*SUM:*		705	*SUM:*			732	*SUM:*			742	*SUM:*			742
VOLUME/CAPACITY *(V/C)* RATIO:				0.579			0.588				0.610				0.618				0.618
V/C LESS ATSAC/ATCS ADJUSTMENT:				0.579			0.588				0.610				0.618				0.618
LEVEL OF SERVICE (LOS):				A			A				B				B				B

REMARKS: Alt. Route 1: Concurrent Use of All Three Disposal Sites

Version: 1i Beta; 8/4/2011

PROJECT IMPACT

Change in *v/c* due to project:	0.008	Δ*v/c* after mitigation:	0.008
Significant impacted?	NO	Fully mitigated?	N/A

Level of Service Workheet
(Circular 212 Method)

I/S #:	North-South Street:	Laurel Canyon Boulevard	Year of Count:	2015	Ambient Growth: (%):	1.5	Conducted by:	City Traffic Counters	Date:	4/24/2015
CMA5	East-West Street:	Branford Street	Projection Year:	2018	Peak Hour:	AM	Reviewed by:		Project:	Pacoima Reservoir Project/1-13-4

No. of Phases				3				3				3				3				3			3
Opposed Ø'ing: N/S-1, E/W-2 or Both-3?				0				0				0				0				0			0
Right Turns: FREE-1, NRTOR-2 or OLA-3?	NB--	0	SB--	0	NB--	0	SB--	0	NB--	0	SB--	0	NB--	0	SB--	0	NB--	0	SB--	0	NB--	0	SB-- 0
	EB--	0	WB--	0	EB--	0	WB--	0	EB--	0	WB--	0	EB--	0	WB--	0	EB--	0	WB--	0	EB--	0	WB-- 0
ATSAC-1 or ATSAC+ATCS-2?				2				2				2				2				2			2
Override Capacity				0				0				0				0				0			0

	MOVEMENT	EXISTING CONDITION			EXISTING PLUS PROJECT			FUTURE CONDITION W/O PROJECT				FUTURE CONDITION W/ PROJECT				FUTURE W/ PROJECT W/ MITIGATION			
		Volume	No. of Lanes	Lane Volume	Project Traffic	Total Volume	Lane Volume	Added Volume	Total Volume	No. of Lanes	Lane Volume	Added Volume	Total Volume	No. of Lanes	Lane Volume	Added Volume	Total Volume	No. of Lanes	Lane Volume
NORTHBOUND	Left	149	2	**82**	0	149	**82**	0	156	2	**86**	0	156	2	**86**	0	156	2	**86**
	Left-Through		0							0				0				0	
	Through	397	1	271	0	397	280	12	427	1	290	0	427	1	298	0	427	1	298
	Through-Right		1							1				1				1	
	Right	145	0	145	17	162	162	0	152	0	152	17	169	0	169	0	169	0	169
	Left-Through-Right		0							0				0				0	
	Left-Right		0							0				0				0	
SOUTHBOUND	Left	136	2	75	0	136	75	1	143	2	79	0	143	2	79	0	143	2	79
	Left-Through		0							0				0				0	
	Through	984	1	**555**	0	984	**555**	8	1037	1	**588**	0	1037	1	**588**	0	1037	1	**588**
	Through-Right		1							1				1				1	
	Right	126	0	126	0	126	126	7	139	0	139	0	139	0	139	0	139	0	139
	Left-Through-Right		0							0				0				0	
	Left-Right		0							0				0				0	
EASTBOUND	Left	98	1	**98**	0	98	**98**	11	113	1	**113**	0	113	1	**113**	0	113	1	**113**
	Left-Through		0							0				0				0	
	Through	524	1	428	0	524	428	0	548	1	448	0	548	1	448	0	548	1	448
	Through-Right		1							1				1				1	
	Right	332	0	332	0	332	332	0	347	0	347	0	347	0	347	0	347	0	347
	Left-Through-Right		0							0				0				0	
	Left-Right		0							0				0				0	
WESTBOUND	Left	172	1	172	0	172	172	0	180	1	180	0	180	1	180	0	180	1	180
	Left-Through		0							0				0				0	
	Through	531	1	**531**	0	531	**531**	0	555	1	**555**	0	555	1	**555**	0	555	1	**555**
	Through-Right		0							0				0				0	
	Right	129	1	92	0	129	92	2	137	1	98	0	137	1	98	0	137	1	98
	Left-Through-Right		0							0				0				0	
	Left-Right		0							0				0				0	
CRITICAL VOLUMES		North-South:		637	North-South:		637	North-South:			674	North-South:			674	North-South:			674
		East-West:		629	East-West:		629	East-West:			668	East-West:			668	East-West:			668
		SUM:		1266	SUM:		1266	SUM:			1342	SUM:			1342	SUM:			1342
VOLUME/CAPACITY (V/C) RATIO:				0.888			0.888				0.942				0.942				0.942
V/C LESS ATSAC/ATCS ADJUSTMENT:				**0.788**			**0.788**				**0.842**				**0.842**				**0.842**
LEVEL OF SERVICE (LOS):				**C**			**C**				**D**				**D**				**D**

REMARKS: Alt. Route 1: Concurrent Use of All Three Disposal Sites

Version: 1i Beta; 8/4/2011

PROJECT IMPACT

Change in *v/c* due to project:	0.000	Δ*v/c* after mitigation:	0.000
Significant impacted?	NO	Fully mitigated?	N/A

Level of Service Workheet
(Circular 212 Method)

I/S #:	North-South Street:	Laurel Canyon Boulevard	Year of Count:	2015	Ambient Growth: (%):	1.5	Conducted by:	City Traffic Counters	Date:	4/24/2015
CMA5	East-West Street:	Branford Street	Projection Year:	2018	Peak Hour:	Mid-Day	Reviewed by:		Project:	Pacoima Reservoir Project/1-13-4

No. of Phases				3				3				3				3				3			3
Opposed Ø'ing: N/S-1, E/W-2 or Both-3?				0				0				0				0				0			0
Right Turns: FREE-1, NRTOR-2 or OLA-3?	NB--	0	SB--	0	NB--	0	SB--	0	NB--	0	SB--	0	NB--	0	SB--	0	NB--	0	SB--	0	NB--	0	SB--	0
	EB--	0	WB--	0	EB--	0	WB--	0	EB--	0	WB--	0	EB--	0	WB--	0	EB--	0	WB--	0	EB--	0	WB--	0
ATSAC-1 or ATSAC+ATCS-2?				2				2				2				2				2			2
Override Capacity				0				0				0				0				0			0

	MOVEMENT	EXISTING CONDITION			EXISTING PLUS PROJECT			FUTURE CONDITION W/O PROJECT				FUTURE CONDITION W/ PROJECT				FUTURE W/ PROJECT W/ MITIGATION			
		Volume	No. of Lanes	Lane Volume	Project Traffic	Total Volume	Lane Volume	Added Volume	Total Volume	No. of Lanes	Lane Volume	Added Volume	Total Volume	No. of Lanes	Lane Volume	Added Volume	Total Volume	No. of Lanes	Lane Volume
NORTHBOUND	Left	94	2	52	0	94	52	0	98	2	54	0	98	2	54	0	98	2	54
	Left-Through		0							0				0				0	
	Through	455	1	**284**	0	455	**292**	1	477	1	**297**	0	477	1	**306**	0	477	1	**306**
	Through-Right		1							1				1				1	
	Right	112	0	112	17	129	129	0	117	0	117	17	134	0	134	0	134	0	134
	Left-Through-Right		0							0				0				0	
	Left-Right		0							0				0				0	
SOUTHBOUND	Left	89	2	**49**	0	89	**49**	0	93	2	**51**	0	93	2	**51**	0	93	2	**51**
	Left-Through		0							0				0				0	
	Through	380	1	256	0	380	256	1	398	1	268	0	398	1	268	0	398	1	268
	Through-Right		1							1				1				1	
	Right	131	0	131	0	131	131	0	137	0	137	0	137	0	137	0	137	0	137
	Left-Through-Right		0							0				0				0	
	Left-Right		0							0				0				0	
EASTBOUND	Left	114	1	**114**	0	114	**114**	0	119	1	**119**	0	119	1	**119**	0	119	1	**119**
	Left-Through		0							0				0				0	
	Through	243	1	202	0	243	202	0	254	1	211	0	254	1	211	0	254	1	211
	Through-Right		1							1				1				1	
	Right	160	0	160	0	160	160	0	167	0	167	0	167	0	167	0	167	0	167
	Left-Through-Right		0							0				0				0	
	Left-Right		0							0				0				0	
WESTBOUND	Left	91	1	91	0	91	91	0	95	1	95	0	95	1	95	0	95	1	95
	Left-Through		0							0				0				0	
	Through	265	1	**265**	0	265	**265**	0	277	1	**277**	0	277	1	**277**	0	277	1	**277**
	Through-Right		0							0				0				0	
	Right	117	1	93	0	117	93	0	122	1	97	0	122	1	97	0	122	1	97
	Left-Through-Right		0							0				0				0	
	Left-Right		0							0				0				0	
CRITICAL VOLUMES		*North-South:*		333	*North-South:*		341	*North-South:*			348	*North-South:*			357	*North-South:*			357
		East-West:		379	*East-West:*		379	*East-West:*			396	*East-West:*			396	*East-West:*			396
		SUM:		712	*SUM:*		720	*SUM:*			744	*SUM:*			753	*SUM:*			753
VOLUME/CAPACITY *(V/C)* RATIO:				0.500			0.505				0.522				0.528				0.528
V/C LESS ATSAC/ATCS ADJUSTMENT:				**0.400**			**0.405**				**0.422**				**0.428**				**0.428**
LEVEL OF SERVICE (LOS):				**A**			**A**				**A**				**A**				**A**

REMARKS: Alt. Route 1: Concurrent Use of All Three Disposal Sites

Version: 1i Beta; 8/4/2011

PROJECT IMPACT

Change in *v/c* due to project:	0.006	Δ*v/c* after mitigation:	0.006
Significant impacted?	NO	Fully mitigated?	N/A

Level of Service Workheet
(Circular 212 Method)

I/S #:	North-South Street:	Laurel Canyon Boulevard	Year of Count:	2015	Ambient Growth: (%):	1.5	Conducted by:	City Traffic Counters	Date:	4/24/2015
CMA5	East-West Street:	Branford Street	Projection Year:	2018	Peak Hour:	PM	Reviewed by:		Project:	Pacoima Reservoir Project/1-13-4

No. of Phases				3				3				3				3				3		
Opposed Ø'ing: N/S-1, E/W-2 or Both-3?				0				0				0				0				0		
Right Turns: FREE-1, NRTOR-2 or OLA-3?	NB--	0	SB--	0	NB--	0	SB--	0	NB--	0	SB--	0	NB--	0	SB--	0	NB--	0	SB--	0	NB--	0	SB--	0
	EB--	0	WB--	0	EB--	0	WB--	0	EB--	0	WB--	0	EB--	0	WB--	0	EB--	0	WB--	0	EB--	0	WB--	0
ATSAC-1 or ATSAC+ATCS-2?				2				2				2				2				2		
Override Capacity				0				0				0				0				0		

	MOVEMENT	EXISTING CONDITION			EXISTING PLUS PROJECT			FUTURE CONDITION W/O PROJECT				FUTURE CONDITION W/ PROJECT				FUTURE W/ PROJECT W/ MITIGATION			
		Volume	No. of Lanes	Lane Volume	Project Traffic	Total Volume	Lane Volume	Added Volume	Total Volume	No. of Lanes	Lane Volume	Added Volume	Total Volume	No. of Lanes	Lane Volume	Added Volume	Total Volume	No. of Lanes	Lane Volume
NORTHBOUND	Left	119	2	65	0	119	65	0	124	2	68	0	124	2	68	0	124	2	68
	Left-Through		0							0				0				0	
	Through	852	1	**501**	0	852	**510**	4	895	1	**526**	0	895	1	**535**	0	895	1	**535**
	Through-Right		1							1				1				1	
	Right	150	0	150	17	167	167	0	157	0	157	17	174	0	174	0	174	0	174
	Left-Through-Right		0							0				0				0	
	Left-Right		0							0				0				0	
SOUTHBOUND	Left	99	2	**54**	0	99	**54**	1	105	2	**58**	0	105	2	**58**	0	105	2	**58**
	Left-Through		0							0				0				0	
	Through	473	1	307	0	473	307	6	501	1	327	0	501	1	327	0	501	1	327
	Through-Right		1							1				1				1	
	Right	141	0	141	0	141	141	5	152	0	152	0	152	0	152	0	152	0	152
	Left-Through-Right		0							0				0				0	
	Left-Right		0							0				0				0	
EASTBOUND	Left	153	1	**153**	0	153	**153**	3	163	1	**163**	0	163	1	**163**	0	163	1	**163**
	Left-Through		0							0				0				0	
	Through	402	1	291	0	402	291	0	420	1	304	0	420	1	304	0	420	1	304
	Through-Right		1							1				1				1	
	Right	179	0	179	0	179	179	0	187	0	187	0	187	0	187	0	187	0	187
	Left-Through-Right		0							0				0				0	
	Left-Right		0							0				0				0	
WESTBOUND	Left	157	1	157	0	157	157	0	164	1	164	0	164	1	164	0	164	1	164
	Left-Through		0							0				0				0	
	Through	447	1	**447**	0	447	**447**	0	467	1	**467**	0	467	1	**467**	0	467	1	**467**
	Through-Right		0							0				0				0	
	Right	151	1	124	0	151	124	1	159	1	130	0	159	1	130	0	159	1	130
	Left-Through-Right		0							0				0				0	
	Left-Right		0							0				0				0	
CRITICAL VOLUMES		North-South:		555	North-South:		564	North-South:			584	North-South:			593	North-South:			593
		East-West:		600	East-West:		600	East-West:			630	East-West:			630	East-West:			630
		SUM:		1155	SUM:		1164	SUM:			1214	SUM:			1223	SUM:			1223
VOLUME/CAPACITY (V/C) RATIO:				0.811			0.817				0.852				0.858				0.858
V/C LESS ATSAC/ATCS ADJUSTMENT:				0.711			0.717				0.752				0.758				0.758
LEVEL OF SERVICE (LOS):				C			C				C				C				C

REMARKS: Alt. Route 1: Concurrent Use of All Three Disposal Sites

Version: 1i Beta; 8/4/2011

PROJECT IMPACT

Change in *v/c* due to project:	0.006	Δ*v/c* after mitigation:	0.006
Significant impacted?	NO	Fully mitigated?	N/A

Level of Service Workheet
(Circular 212 Method)

I/S #:	North-South Street:	San Fernando Road	Year of Count:	2015	Ambient Growth: (%):	1.5	Conducted by:	City Traffic Counters	Date:	4/24/2015
CMA6	East-West Street:	Branford Street	Projection Year:	2018	Peak Hour:	AM	Reviewed by:		Project:	Pacoima Reservoir Project/1-13-4

No. of Phases				4				4				4				4				4			
Opposed Ø'ing: N/S-1, E/W-2 or Both-3?				0				0				0				0				0			
Right Turns: FREE-1, NRTOR-2 or OLA-3?	NB--	0	SB--	0	NB--	0	SB--	0	NB--	0	SB--	0	NB--	0	SB--	0	NB--	0	SB--	0			
	EB--	0	WB--	0	EB--	0	WB--	0	EB--	0	WB--	0	EB--	0	WB--	0	EB--	0	WB--	0			
ATSAC-1 or ATSAC+ATCS-2?				2				2				2				2				2			
Override Capacity				0				0				0				0				0			

	MOVEMENT	EXISTING CONDITION			EXISTING PLUS PROJECT			FUTURE CONDITION W/O PROJECT				FUTURE CONDITION W/ PROJECT				FUTURE W/ PROJECT W/ MITIGATION			
		Volume	No. of Lanes	Lane Volume	Project Traffic	Total Volume	Lane Volume	Added Volume	Total Volume	No. of Lanes	Lane Volume	Added Volume	Total Volume	No. of Lanes	Lane Volume	Added Volume	Total Volume	No. of Lanes	Lane Volume
NORTHBOUND	Left	99	1	**99**	0	99	**99**	0	104	1	**104**	0	104	1	**104**	0	104	1	**104**
	Left-Through		0							0				0				0	
	Through	405	1	282	13	418	289	4	427	1	297	13	440	1	303	0	440	1	303
	Through-Right		1							1				1				1	
	Right	159	0	159	0	159	159	0	166	0	166	0	166	0	166	0	166	0	166
	Left-Through-Right		0							0				0				0	
	Left-Right		0							0				0				0	
SOUTHBOUND	Left	81	1	81	0	81	81	0	85	1	85	0	85	1	85	0	85	1	85
	Left-Through		0							0				0				0	
	Through	965	1	**540**	20	985	**550**	8	1017	1	**569**	20	1037	1	**579**	0	1037	1	**579**
	Through-Right		1							1				1				1	
	Right	115	0	115	0	115	115	0	120	0	120	0	120	0	120	0	120	0	120
	Left-Through-Right		0							0				0				0	
	Left-Right		0							0				0				0	
EASTBOUND	Left	66	1	66	7	73	73	0	69	1	69	7	76	1	76	0	76	1	76
	Left-Through		0							0				0				0	
	Through	408	1	**408**	0	408	**408**	0	427	1	**427**	0	427	1	**427**	0	427	1	**427**
	Through-Right		0							0				0				0	
	Right	209	1	160	10	219	170	0	219	1	167	10	229	1	177	0	229	1	177
	Left-Through-Right		0							0				0				0	
	Left-Right		0							0				0				0	
WESTBOUND	Left	117	0	**117**	0	117	**117**	0	122	0	**122**	0	122	0	**122**	0	122	0	**122**
	Left-Through		0							0				0				0	
	Through	270	0	436	0	270	436	0	282	0	455	0	282	0	455	0	282	0	455
	Through-Right		0							0				0				0	
	Right	49	0	0	0	49	0	0	51	0	0	0	51	0	0	0	51	0	0
	Left-Through-Right		1							1				1				1	
	Left-Right		0							0				0				0	
CRITICAL VOLUMES		*North-South:*		639	*North-South:*		649	*North-South:*			673	*North-South:*			683	*North-South:*			683
		East-West:		525	*East-West:*		525	*East-West:*			549	*East-West:*			549	*East-West:*			549
		SUM:		1164	*SUM:*		1174	*SUM:*			1222	*SUM:*			1232	*SUM:*			1232
VOLUME/CAPACITY *(V/C)* RATIO:				0.847			0.854				0.889				0.896				0.896
V/C LESS ATSAC/ATCS ADJUSTMENT:				**0.747**			**0.754**				**0.789**				**0.796**				**0.796**
LEVEL OF SERVICE (LOS):				**C**			**C**				**C**				**C**				**C**

REMARKS: Alt. Route 1: Concurrent Use of All Three Disposal Sites

Version: 1i Beta; 8/4/2011

PROJECT IMPACT

Change in *v/c* due to project:	0.007	Δ*v/c* after mitigation:	0.007
Significant impacted?	NO	Fully mitigated?	N/A

Level of Service Workheet
(Circular 212 Method)

I/S #:	North-South Street:	San Fernando Road	Year of Count:	2015	Ambient Growth: (%):	1.5	Conducted by:	City Traffic Counters	Date:	4/24/2015
CMA6	East-West Street:	Branford Street	Projection Year:	2018	Peak Hour:	Mid-Day	Reviewed by:		Project:	Pacoima Reservoir Project/1-13-4

No. of Phases				4				4				4				4				4			4
Opposed Ø'ing: N/S-1, E/W-2 or Both-3?				0				0				0				0				0			0
Right Turns: FREE-1, NRTOR-2 or OLA-3?	NB--	0	SB--	0	NB--	0	SB--	0	NB--	0	SB--	0	NB--	0	SB--	0	NB--	0	SB--	0	NB--	0	SB--	0
	EB--	0	WB--	0	EB--	0	WB--	0	EB--	0	WB--	0	EB--	0	WB--	0	EB--	0	WB--	0	EB--	0	WB--	0
ATSAC-1 or ATSAC+ATCS-2?				2				2				2				2				2			2
Override Capacity				0				0				0				0				0			0

	MOVEMENT	EXISTING CONDITION			EXISTING PLUS PROJECT			FUTURE CONDITION W/O PROJECT				FUTURE CONDITION W/ PROJECT				FUTURE W/ PROJECT W/ MITIGATION			
		Volume	No. of Lanes	Lane Volume	Project Traffic	Total Volume	Lane Volume	Added Volume	Total Volume	No. of Lanes	Lane Volume	Added Volume	Total Volume	No. of Lanes	Lane Volume	Added Volume	Total Volume	No. of Lanes	Lane Volume
NORTHBOUND	Left	61	1	61	0	61	61	0	64	1	64	0	64	1	64	0	64	1	64
	Left-Through		0							0				0				0	
	Through	442	1	**297**	13	455	**304**	8	470	1	**315**	13	483	1	**321**	0	483	1	**321**
	Through-Right		1							1				1				1	
	Right	152	0	152	0	152	152	0	159	0	159	0	159	0	159	0	159	0	159
	Left-Through-Right		0							0				0				0	
	Left-Right		0							0				0				0	
SOUTHBOUND	Left	82	1	**82**	0	82	**82**	0	86	1	**86**	0	86	1	**86**	0	86	1	**86**
	Left-Through		0							0				0				0	
	Through	423	1	254	20	443	264	6	448	1	269	20	468	1	279	0	468	1	279
	Through-Right		1							1				1				1	
	Right	85	0	85	0	85	85	0	89	0	89	0	89	0	89	0	89	0	89
	Left-Through-Right		0							0				0				0	
	Left-Right		0							0				0				0	
EASTBOUND	Left	43	1	**43**	7	50	**50**	0	45	1	**45**	7	52	1	**52**	0	52	1	**52**
	Left-Through		0							0				0				0	
	Through	227	1	227	0	227	227	0	237	1	237	0	237	1	237	0	237	1	237
	Through-Right		0							0				0				0	
	Right	97	1	67	10	107	77	0	101	1	69	10	111	1	79	0	111	1	79
	Left-Through-Right		0							0				0				0	
	Left-Right		0							0				0				0	
WESTBOUND	Left	110	0	110	0	110	110	0	115	0	115	0	115	0	115	0	115	0	115
	Left-Through		0							0				0				0	
	Through	229	0	**412**	0	229	**412**	0	239	0	**430**	0	239	0	**430**	0	239	0	**430**
	Through-Right		0							0				0				0	
	Right	73	0	0	0	73	0	0	76	0	0	0	76	0	0	0	76	0	0
	Left-Through-Right		1							1				1				1	
	Left-Right		0							0				0				0	
CRITICAL VOLUMES		North-South:		379	North-South:		386	North-South:			401	North-South:			407	North-South:			407
		East-West:		455	East-West:		462	East-West:			475	East-West:			482	East-West:			482
		SUM:		834	SUM:		848	SUM:			876	SUM:			889	SUM:			889
VOLUME/CAPACITY (V/C) RATIO:				0.607			0.617				0.637				0.647				0.647
V/C LESS ATSAC/ATCS ADJUSTMENT:				0.507			0.517				0.537				0.547				0.547
LEVEL OF SERVICE (LOS):				A			A				A				A				A

REMARKS: Alt. Route 1: Concurrent Use of All Three Disposal Sites

Version: 1i Beta; 8/4/2011

PROJECT IMPACT

Change in *v/c* due to project:	0.010	Δ*v/c* after mitigation:	0.010
Significant impacted?	NO	Fully mitigated?	N/A

Level of Service Workheet
(Circular 212 Method)

I/S #:	North-South Street:	San Fernando Road	Year of Count:	2015	Ambient Growth: (%):	1.5	Conducted by:	City Traffic Counters	Date:	4/24/2015
CMA6	East-West Street:	Branford Street	Projection Year:	2018	Peak Hour:	PM	Reviewed by:		Project:	Pacoima Reservoir Project/1-13-4

No. of Phases				4				4				4				4				4			
Opposed Ø'ing: N/S-1, E/W-2 or Both-3?				0				0				0				0				0			
Right Turns: FREE-1, NRTOR-2 or OLA-3?	NB--	0	SB--	0	NB--	0	SB--	0	NB--	0	SB--	0	NB--	0	SB--	0	NB--	0	SB--	0			
	EB--	0	WB--	0	EB--	0	WB--	0	EB--	0	WB--	0	EB--	0	WB--	0	EB--	0	WB--	0			
ATSAC-1 or ATSAC+ATCS-2?				2				2				2				2				2			
Override Capacity				0				0				0				0				0			

	MOVEMENT	EXISTING CONDITION			EXISTING PLUS PROJECT			FUTURE CONDITION W/O PROJECT				FUTURE CONDITION W/ PROJECT				FUTURE W/ PROJECT W/ MITIGATION			
		Volume	No. of Lanes	Lane Volume	Project Traffic	Total Volume	Lane Volume	Added Volume	Total Volume	No. of Lanes	Lane Volume	Added Volume	Total Volume	No. of Lanes	Lane Volume	Added Volume	Total Volume	No. of Lanes	Lane Volume
NORTHBOUND	Left	104	1	104	0	104	104	0	109	1	109	0	109	1	109	0	109	1	109
	Left-Through		0							0				0				0	
	Through	681	1	**403**	13	694	**409**	8	720	1	**425**	13	733	1	**432**	0	733	1	**432**
	Through-Right		1							1				1				1	
	Right	124	0	124	0	124	124	0	130	0	130	0	130	0	130	0	130	0	130
	Left-Through-Right		0							0				0				0	
	Left-Right		0							0				0				0	
SOUTHBOUND	Left	58	1	**58**	0	58	**58**	0	61	1	**61**	0	61	1	**61**	0	61	1	**61**
	Left-Through		0							0				0				0	
	Through	374	1	229	20	394	239	6	397	1	243	20	417	1	253	0	417	1	253
	Through-Right		1							1				1				1	
	Right	84	0	84	0	84	84	0	88	0	88	0	88	0	88	0	88	0	88
	Left-Through-Right		0							0				0				0	
	Left-Right		0							0				0				0	
EASTBOUND	Left	61	1	**61**	7	68	**68**	0	64	1	**64**	7	71	1	**71**	0	71	1	**71**
	Left-Through		0							0				0				0	
	Through	264	1	264	0	264	264	0	276	1	276	0	276	1	276	0	276	1	276
	Through-Right		0							0				0				0	
	Right	68	1	16	10	78	26	0	71	1	17	10	81	1	27	0	81	1	27
	Left-Through-Right		0							0				0				0	
	Left-Right		0							0				0				0	
WESTBOUND	Left	113	0	113	0	113	113	0	118	0	118	0	118	0	118	0	118	0	118
	Left-Through		0							0				0				0	
	Through	314	0	**484**	0	314	**484**	0	328	0	**506**	0	328	0	**506**	0	328	0	**506**
	Through-Right		0							0				0				0	
	Right	57	0	0	0	57	0	0	60	0	0	0	60	0	0	0	60	0	0
	Left-Through-Right		1							1				1				1	
	Left-Right		0							0				0				0	
CRITICAL VOLUMES		North-South:		461	North-South:		467	North-South:			486	North-South:			493	North-South:			493
		East-West:		545	East-West:		552	East-West:			570	East-West:			577	East-West:			577
		SUM:		1006	SUM:		1019	SUM:			1056	SUM:			1070	SUM:			1070
VOLUME/CAPACITY (V/C) RATIO:				0.732			0.741				0.768				0.778				0.778
V/C LESS ATSAC/ATCS ADJUSTMENT:				**0.632**			**0.641**				**0.668**				**0.678**				**0.678**
LEVEL OF SERVICE (LOS):				**B**			**B**				**B**				**B**				**B**

REMARKS: Alt. Route 1: Concurrent Use of All Three Disposal Sites

Version: 1i Beta; 8/4/2011

PROJECT IMPACT

Change in *v/c* due to project:	0.010	Δ*v/c* after mitigation:	0.010
Significant impacted?	NO	Fully mitigated?	N/A

Level of Service Workheet
(Circular 212 Method)

I/S #:	North-South Street:	Laurel Canyon Boulevard	Year of Count:	2015	Ambient Growth: (%):	1.5	Conducted by:	City Traffic Counters	Date:	4/24/2015
CMA7	East-West Street:	I-5 Freeway NB Off-Ramp	Projection Year:	2018	Peak Hour:	AM	Reviewed by:		Project:	Pacoima Reservoir Project/1-13-4

No. of Phases				0				0				0				0				0			0
Opposed Ø'ing: N/S-1, E/W-2 or Both-3?				0				0				0				0				0			0
Right Turns: FREE-1, NRTOR-2 or OLA-3?	NB--	0	SB--	0	NB--	0	SB--	0	NB--	0	SB--	0	NB--	0	SB--	0	NB--	0	SB--	0	NB--	0	SB-- 0
	EB--	0	WB--	0	EB--	0	WB--	0	EB--	0	WB--	0	EB--	0	WB--	0	EB--	0	WB--	0	EB--	0	WB-- 0
ATSAC-1 or ATSAC+ATCS-2?				0				0				0				0				0			0
Override Capacity				1200				1200				1200				1200				1200			1200

MOVEMENT		EXISTING CONDITION			EXISTING PLUS PROJECT			FUTURE CONDITION W/O PROJECT				FUTURE CONDITION W/ PROJECT				FUTURE W/ PROJECT W/ MITIGATION			
		Volume	No. of Lanes	Lane Volume	Project Traffic	Total Volume	Lane Volume	Added Volume	Total Volume	No. of Lanes	Lane Volume	Added Volume	Total Volume	No. of Lanes	Lane Volume	Added Volume	Total Volume	No. of Lanes	Lane Volume
NORTHBOUND	Left	0	0	**0**	0	0	**0**	0	0	0	**0**	0	0	0	**0**	0	0	0	**0**
	Left-Through		0							0				0				0	
	Through	535	1	278	17	552	287	12	571	1	297	17	588	1	305	0	588	1	305
	Through-Right		1							1				1				1	
	Right	21	0	21	0	21	21	0	22	0	22	0	22	0	22	0	22	0	22
	Left-Through-Right		0							0				0				0	
	Left-Right		0							0				0				0	
SOUTHBOUND	Left	79	1	79	0	79	79	0	83	1	83	0	83	1	83	0	83	1	83
	Left-Through		0							0				0				0	
	Through	1279	2	**640**	0	1279	**640**	8	1345	2	**673**	0	1345	2	**673**	0	1345	2	**673**
	Through-Right		0							0				0				0	
	Right	0	0	0	0	0	0	0	0	0	0	0	0	0	0	0	0	0	0
	Left-Through-Right		0							0				0				0	
	Left-Right		0							0				0				0	
EASTBOUND	Left	27	0	27	0	27	27	0	28	0	28	0	28	0	28	0	28	0	28
	Left-Through		1							1				1				1	
	Through	5	0	32	0	5	32	0	5	0	33	0	5	0	33	0	5	0	33
	Through-Right		0							0				0				0	
	Right	273	1	**273**	0	273	**273**	0	285	1	**285**	0	285	1	**285**	0	285	1	**285**
	Left-Through-Right		0							0				0				0	
	Left-Right		0							0				0				0	
WESTBOUND	Left	21	0	**21**	0	21	**21**	0	22	0	**22**	0	22	0	**22**	0	22	0	**22**
	Left-Through		0							0				0				0	
	Through	0	0	94	0	0	94	0	0	0	98	0	0	0	98	0	0	0	98
	Through-Right		0							0				0				0	
	Right	73	0	0	0	73	0	0	76	0	0	0	76	0	0	0	76	0	0
	Left-Through-Right		1							1				1				1	
	Left-Right		0							0				0				0	
CRITICAL VOLUMES		*North-South:*		640	*North-South:*		640	*North-South:*			673	*North-South:*			673	*North-South:*			673
		East-West:		294	*East-West:*		294	*East-West:*			307	*East-West:*			307	*East-West:*			307
		SUM:		934	*SUM:*		934	*SUM:*			980	*SUM:*			980	*SUM:*			980
VOLUME/CAPACITY *(V/C)* RATIO:				0.778			0.778				0.817				0.817				0.817
V/C LESS ATSAC/ATCS ADJUSTMENT:				0.778			0.778				0.817				0.817				0.817
LEVEL OF SERVICE (LOS):				C			C				D				D				D

REMARKS: Alt. Route 1: Concurrent Use of All Three Disposal Sites

Version: 1i Beta; 8/4/2011

PROJECT IMPACT

Change in *v/c* due to project:	0.000	Δ*v/c* after mitigation:	0.000
Significant impacted?	NO	Fully mitigated?	N/A

Level of Service Workheet
(Circular 212 Method)

I/S #:	North-South Street:	Laurel Canyon Boulevard	Year of Count:	2015	Ambient Growth: (%):	1.5	Conducted by:	City Traffic Counters	Date:	4/24/2015
CMA7	East-West Street:	I-5 Freeway NB Off-Ramp	Projection Year:	2018	Peak Hour:	Mid-Day	Reviewed by:		Project:	Pacoima Reservoir Project/1-13-4

No. of Phases				0				0				0				0				0			0
Opposed Ø'ing: N/S-1, E/W-2 or Both-3?				0				0				0				0				0			0
Right Turns: FREE-1, NRTOR-2 or OLA-3?	NB--	0	SB--	0	NB--	0	SB--	0	NB--	0	SB--	0	NB--	0	SB--	0	NB--	0	SB--	0	NB--	0	SB-- 0
	EB--	0	WB--	0	EB--	0	WB--	0	EB--	0	WB--	0	EB--	0	WB--	0	EB--	0	WB--	0	EB--	0	WB-- 0
ATSAC-1 or ATSAC+ATCS-2?				0				0				0				0				0			0
Override Capacity				1200				1200				1200				1200				1200			1200

MOVEMENT		EXISTING CONDITION			EXISTING PLUS PROJECT			FUTURE CONDITION W/O PROJECT				FUTURE CONDITION W/ PROJECT				FUTURE W/ PROJECT W/ MITIGATION			
		Volume	No. of Lanes	Lane Volume	Project Traffic	Total Volume	Lane Volume	Added Volume	Total Volume	No. of Lanes	Lane Volume	Added Volume	Total Volume	No. of Lanes	Lane Volume	Added Volume	Total Volume	No. of Lanes	Lane Volume
NORTHBOUND	Left	0	0	**0**	0	0	**0**	0	0	0	**0**	0	0	0	**0**	0	0	0	**0**
	Left-Through		0							0				0				0	
	Through	386	1	207	17	403	216	1	405	1	217	17	422	1	226	0	422	1	226
	Through-Right		1							1				1				1	
	Right	28	0	28	0	28	28	0	29	0	29	0	29	0	29	0	29	0	29
	Left-Through-Right		0							0				0				0	
	Left-Right		0							0				0				0	
SOUTHBOUND	Left	28	1	28	0	28	28	0	29	1	29	0	29	1	29	0	29	1	29
	Left-Through		0							0				0				0	
	Through	499	2	**250**	0	499	**250**	1	523	2	**262**	0	523	2	**262**	0	523	2	**262**
	Through-Right		0							0				0				0	
	Right	0	0	0	0	0	0	0	0	0	0	0	0	0	0	0	0	0	0
	Left-Through-Right		0							0				0				0	
	Left-Right		0							0				0				0	
EASTBOUND	Left	40	0	40	0	40	40	0	42	0	42	0	42	0	42	0	42	0	42
	Left-Through		1							1				1				1	
	Through	7	0	47	0	7	47	0	7	0	49	0	7	0	49	0	7	0	49
	Through-Right		0							0				0				0	
	Right	142	1	**142**	0	142	**142**	0	148	1	**148**	0	148	1	**148**	0	148	1	**148**
	Left-Through-Right		0							0				0				0	
	Left-Right		0							0				0				0	
WESTBOUND	Left	17	0	**17**	0	17	**17**	0	18	0	**18**	0	18	0	**18**	0	18	0	**18**
	Left-Through		0							0				0				0	
	Through	0	0	41	0	0	41	0	0	0	43	0	0	0	43	0	0	0	43
	Through-Right		0							0				0				0	
	Right	24	0	0	0	24	0	0	25	0	0	0	25	0	0	0	25	0	0
	Left-Through-Right		1							1				1				1	
	Left-Right		0							0				0				0	
CRITICAL VOLUMES			*North-South:*	250		*North-South:*	250		*North-South:*	262			*North-South:*	262			*North-South:*	262	
			East-West:	159		*East-West:*	159		*East-West:*	166			*East-West:*	166			*East-West:*	166	
			SUM:	409		*SUM:*	409		*SUM:*	428			*SUM:*	428			*SUM:*	428	
VOLUME/CAPACITY *(V/C)* RATIO:				0.341			0.341				0.357				0.357				0.357
V/C LESS ATSAC/ATCS ADJUSTMENT:				0.341			0.341				0.357				0.357				0.357
LEVEL OF SERVICE (LOS):				A			A				A				A				A

REMARKS: Alt. Route 1: Concurrent Use of All Three Disposal Sites

Version: 1i Beta; 8/4/2011

PROJECT IMPACT

Change in *v/c* due to project:	0.000	Δ*v/c* after mitigation:	0.000
Significant impacted?	NO	Fully mitigated?	N/A

Level of Service Workheet
(Circular 212 Method)

I/S #:	North-South Street:	Laurel Canyon Boulevard	Year of Count:	2015	Ambient Growth: (%):	1.5	Conducted by:	City Traffic Counters	Date:	4/24/2015
CMA7	East-West Street:	I-5 Freeway NB Off-Ramp	Projection Year:	2018	Peak Hour:	PM	Reviewed by:		Project:	Pacoima Reservoir Project/1-13-4

No. of Phases				0				0				0				0				0			0
Opposed Ø'ing: N/S-1, E/W-2 or Both-3?				0				0				0				0				0			0
Right Turns: FREE-1, NRTOR-2 or OLA-3?	NB--	0	SB--	0	NB--	0	SB--	0	NB--	0	SB--	0	NB--	0	SB--	0	NB--	0	SB--	0	NB--	0	SB-- 0
	EB--	0	WB--	0	EB--	0	WB--	0	EB--	0	WB--	0	EB--	0	WB--	0	EB--	0	WB--	0	EB--	0	WB-- 0
ATSAC-1 or ATSAC+ATCS-2?				0				0				0				0				0			0
Override Capacity				1200				1200				1200				1200				1200			1200

MOVEMENT		EXISTING CONDITION			EXISTING PLUS PROJECT			FUTURE CONDITION W/O PROJECT				FUTURE CONDITION W/ PROJECT				FUTURE W/ PROJECT W/ MITIGATION			
		Volume	No. of Lanes	Lane Volume	Project Traffic	Total Volume	Lane Volume	Added Volume	Total Volume	No. of Lanes	Lane Volume	Added Volume	Total Volume	No. of Lanes	Lane Volume	Added Volume	Total Volume	No. of Lanes	Lane Volume
NORTHBOUND	Left	0	0	0	0	0	0	0	0	0	0	0	0	0	0	0	0	0	0
	Left-Through		0							0				0				0	
	Through	1013	1	**522**	17	1030	**530**	4	1063	1	**547**	17	1080	1	**556**	0	1080	1	**556**
	Through-Right		1							1				1				1	
	Right	30	0	30	0	30	30	0	31	0	31	0	31	0	31	0	31	0	31
	Left-Through-Right		0							0				0				0	
	Left-Right		0							0				0				0	
SOUTHBOUND	Left	44	1	**44**	0	44	**44**	0	46	1	**46**	0	46	1	**46**	0	46	1	**46**
	Left-Through		0							0				0				0	
	Through	763	2	382	0	763	382	6	804	2	402	0	804	2	402	0	804	2	402
	Through-Right		0							0				0				0	
	Right	0	0	0	0	0	0	0	0	0	0	0	0	0	0	0	0	0	0
	Left-Through-Right		0							0				0				0	
	Left-Right		0							0				0				0	
EASTBOUND	Left	53	0	53	0	53	53	0	55	0	55	0	55	0	55	0	55	0	55
	Left-Through		1							1				1				1	
	Through	16	0	69	0	16	69	0	17	0	72	0	17	0	72	0	17	0	72
	Through-Right		0							0				0				0	
	Right	200	1	**200**	0	200	**200**	0	209	1	**209**	0	209	1	**209**	0	209	1	**209**
	Left-Through-Right		0							0				0				0	
	Left-Right		0							0				0				0	
WESTBOUND	Left	19	0	**19**	0	19	**19**	0	20	0	**20**	0	20	0	**20**	0	20	0	**20**
	Left-Through		0							0				0				0	
	Through	0	0	65	0	0	65	0	0	0	68	0	0	0	68	0	0	0	68
	Through-Right		0							0				0				0	
	Right	46	0	0	0	46	0	0	48	0	0	0	48	0	0	0	48	0	0
	Left-Through-Right		1							1				1				1	
	Left-Right		0							0				0				0	
CRITICAL VOLUMES		*North-South:*		566	*North-South:*		574	*North-South:*			593	*North-South:*			602	*North-South:*			602
		East-West:		219	*East-West:*		219	*East-West:*			229	*East-West:*			229	*East-West:*			229
		SUM:		785	*SUM:*		793	*SUM:*			822	*SUM:*			831	*SUM:*			831
VOLUME/CAPACITY *(V/C)* RATIO:				0.654			0.661				0.685				0.693				0.693
V/C LESS ATSAC/ATCS ADJUSTMENT:				0.654			0.661				0.685				0.693				0.693
LEVEL OF SERVICE (LOS):				B			B				B				B				B

REMARKS: Alt. Route 1: Concurrent Use of All Three Disposal Sites

Version: 1i Beta; 8/4/2011

PROJECT IMPACT

Change in *v/c* due to project:	0.008	Δ*v/c* after mitigation:	0.008
Significant impacted?	NO	Fully mitigated?	N/A

Level of Service Workheet
(Circular 212 Method)

I/S #:	North-South Street:	Laurel Canyon Boulevard	Year of Count:	2015	Ambient Growth: (%):	1.5	Conducted by:	City Traffic Counters	Date:	4/24/2015
CMA8	East-West Street:	Sheldon Street	Projection Year:	2018	Peak Hour:	AM	Reviewed by:		Project:	Pacoima Reservoir Project/1-13-4

No. of Phases				2				2				2				2				2			2
Opposed Ø'ing: N/S-1, E/W-2 or Both-3?				0				0				0				0				0			0
Right Turns: FREE-1, NRTOR-2 or OLA-3?	NB--	0	SB--	0	NB--	0	SB--	0	NB--	0	SB--	0	NB--	0	SB--	0	NB--	0	SB--	0	NB--	0	SB-- 0
	EB--	0	WB--	0	EB--	0	WB--	0	EB--	0	WB--	0	EB--	0	WB--	0	EB--	0	WB--	0	EB--	0	WB-- 0
ATSAC-1 or ATSAC+ATCS-2?				2				2				2				2				2			2
Override Capacity				0				0				0				0				0			0

MOVEMENT		EXISTING CONDITION			EXISTING PLUS PROJECT			FUTURE CONDITION W/O PROJECT				FUTURE CONDITION W/ PROJECT				FUTURE W/ PROJECT W/ MITIGATION			
		Volume	No. of Lanes	Lane Volume	Project Traffic	Total Volume	Lane Volume	Added Volume	Total Volume	No. of Lanes	Lane Volume	Added Volume	Total Volume	No. of Lanes	Lane Volume	Added Volume	Total Volume	No. of Lanes	Lane Volume
NORTHBOUND	Left	47	1	**47**	0	47	**47**	0	49	1	**49**	0	49	1	**49**	0	49	1	**49**
	Left-Through		0							0				0				0	
	Through	347	2	174	17	364	182	12	375	2	188	17	392	2	196	0	392	2	196
	Through-Right		0							0				0				0	
	Right	220	1	175	13	233	188	0	230	1	183	13	243	1	196	0	243	1	196
	Left-Through-Right		0							0				0				0	
	Left-Right		0							0				0				0	
SOUTHBOUND	Left	152	1	152	0	152	152	0	159	1	159	0	159	1	159	0	159	1	159
	Left-Through		0							0				0				0	
	Through	1202	1	**705**	0	1202	**705**	8	1265	1	**742**	0	1265	1	**742**	0	1265	1	**742**
	Through-Right		1							1				1				1	
	Right	208	0	208	0	208	208	0	218	0	218	0	218	0	218	0	218	0	218
	Left-Through-Right		0							0				0				0	
	Left-Right		0							0				0				0	
EASTBOUND	Left	129	1	**129**	0	129	**129**	0	135	1	**135**	0	135	1	**135**	0	135	1	**135**
	Left-Through		0							0				0				0	
	Through	804	1	462	0	804	462	0	841	1	483	0	841	1	483	0	841	1	483
	Through-Right		1							1				1				1	
	Right	119	0	119	0	119	119	0	124	0	124	0	124	0	124	0	124	0	124
	Left-Through-Right		0							0				0				0	
	Left-Right		0							0				0				0	
WESTBOUND	Left	91	1	91	0	91	91	0	95	1	95	0	95	1	95	0	95	1	95
	Left-Through		0							0				0				0	
	Through	857	1	**487**	0	857	**487**	0	896	1	**509**	0	896	1	**509**	0	896	1	**509**
	Through-Right		1							1				1				1	
	Right	116	0	116	0	116	116	0	121	0	121	0	121	0	121	0	121	0	121
	Left-Through-Right		0							0				0				0	
	Left-Right		0							0				0				0	
CRITICAL VOLUMES		*North-South:*		752	*North-South:*		752	*North-South:*			791	*North-South:*			791	*North-South:*			791
		East-West:		616	*East-West:*		616	*East-West:*			644	*East-West:*			644	*East-West:*			644
		SUM:		1368	*SUM:*		1368	*SUM:*			1435	*SUM:*			1435	*SUM:*			1435
VOLUME/CAPACITY *(V/C)* RATIO:				0.912			0.912				0.957				0.957				0.957
V/C LESS ATSAC/ATCS ADJUSTMENT:				**0.812**			**0.812**				**0.857**				**0.857**				**0.857**
LEVEL OF SERVICE (LOS):				**D**			**D**				**D**				**D**				**D**

REMARKS: Alt. Route 1: Concurrent Use of All Three Disposal Sites

Version: 1i Beta; 8/4/2011

PROJECT IMPACT

Change in *v/c* due to project:	0.000	Δ*v/c* after mitigation:	0.000
Significant impacted?	NO	Fully mitigated?	N/A

Level of Service Workheet
(Circular 212 Method)

I/S #:	North-South Street:	Laurel Canyon Boulevard	Year of Count:	2015	Ambient Growth: (%):	1.5	Conducted by:	City Traffic Counters	Date:	4/24/2015
CMA8	East-West Street:	Sheldon Street	Projection Year:	2018	Peak Hour:	Mid-Day	Reviewed by:		Project:	Pacoima Reservoir Project/1-13-4

No. of Phases				2				2				2				2				2			2
Opposed Ø'ing: N/S-1, E/W-2 or Both-3?				0				0				0				0				0			0
Right Turns: FREE-1, NRTOR-2 or OLA-3?	NB--	0	SB--	0	NB--	0	SB--	0	NB--	0	SB--	0	NB--	0	SB--	0	NB--	0	SB--	0	NB--	0	SB-- 0
	EB--	0	WB--	0	EB--	0	WB--	0	EB--	0	WB--	0	EB--	0	WB--	0	EB--	0	WB--	0	EB--	0	WB-- 0
ATSAC-1 or ATSAC+ATCS-2?				2				2				2				2				2			2
Override Capacity				0				0				0				0				0			0

	MOVEMENT	EXISTING CONDITION			EXISTING PLUS PROJECT			FUTURE CONDITION W/O PROJECT				FUTURE CONDITION W/ PROJECT				FUTURE W/ PROJECT W/ MITIGATION			
		Volume	No. of Lanes	Lane Volume	Project Traffic	Total Volume	Lane Volume	Added Volume	Total Volume	No. of Lanes	Lane Volume	Added Volume	Total Volume	No. of Lanes	Lane Volume	Added Volume	Total Volume	No. of Lanes	Lane Volume
NORTHBOUND	Left	16	1	**16**	0	16	**16**	0	17	1	**17**	0	17	1	**17**	0	17	1	**17**
	Left-Through		0							0				0				0	
	Through	261	2	131	17	278	139	1	274	2	137	17	291	2	146	0	291	2	146
	Through-Right		0							0				0				0	
	Right	221	1	165	13	234	178	0	231	1	172	13	244	1	185	0	244	1	185
	Left-Through-Right		0							0				0				0	
	Left-Right		0							0				0				0	
SOUTHBOUND	Left	117	1	117	0	117	117	0	122	1	122	0	122	1	122	0	122	1	122
	Left-Through		0							0				0				0	
	Through	459	1	**281**	0	459	**281**	1	481	1	**294**	0	481	1	**294**	0	481	1	**294**
	Through-Right		1							1				1				1	
	Right	102	0	102	0	102	102	0	107	0	107	0	107	0	107	0	107	0	107
	Left-Through-Right		0							0				0				0	
	Left-Right		0							0				0				0	
EASTBOUND	Left	58	1	58	0	58	58	0	61	1	61	0	61	1	61	0	61	1	61
	Left-Through		0							0				0				0	
	Through	431	1	**274**	0	431	**274**	0	451	1	**287**	0	451	1	**287**	0	451	1	**287**
	Through-Right		1							1				1				1	
	Right	117	0	117	0	117	117	0	122	0	122	0	122	0	122	0	122	0	122
	Left-Through-Right		0							0				0				0	
	Left-Right		0							0				0				0	
WESTBOUND	Left	113	1	**113**	0	113	**113**	0	118	1	**118**	0	118	1	**118**	0	118	1	**118**
	Left-Through		0							0				0				0	
	Through	363	1	226	0	363	226	0	380	1	236	0	380	1	236	0	380	1	236
	Through-Right		1							1				1				1	
	Right	88	0	88	0	88	88	0	92	0	92	0	92	0	92	0	92	0	92
	Left-Through-Right		0							0				0				0	
	Left-Right		0							0				0				0	
CRITICAL VOLUMES		*North-South:*		297	*North-South:*		297	*North-South:*			311	*North-South:*			311	*North-South:*			311
		East-West:		387	*East-West:*		387	*East-West:*			405	*East-West:*			405	*East-West:*			405
		SUM:		684	*SUM:*		684	*SUM:*			716	*SUM:*			716	*SUM:*			716
VOLUME/CAPACITY *(V/C)* RATIO:				0.456			0.456				0.477				0.477				0.477
V/C LESS ATSAC/ATCS ADJUSTMENT:				**0.356**			**0.356**				**0.377**				**0.377**				**0.377**
LEVEL OF SERVICE (LOS):				**A**			**A**				**A**				**A**				**A**

REMARKS: Alt. Route 1: Concurrent Use of All Three Disposal Sites

Version: 1i Beta; 8/4/2011

PROJECT IMPACT

Change in *v/c* due to project:	0.000	Δ*v/c* after mitigation:	0.000
Significant impacted?	NO	Fully mitigated?	N/A

Level of Service Workheet
(Circular 212 Method)

I/S #:	North-South Street:	Laurel Canyon Boulevard	Year of Count:	2015	Ambient Growth: (%):	1.5	Conducted by:	City Traffic Counters	Date:	4/24/2015
CMA8	East-West Street:	Sheldon Street	Projection Year:	2018	Peak Hour:	PM	Reviewed by:		Project:	Pacoima Reservoir Project/1-13-4

No. of Phases				2				2				2				2				2			
Opposed Ø'ing: N/S-1, E/W-2 or Both-3?				0				0				0				0				0			
Right Turns: FREE-1, NRTOR-2 or OLA-3?	NB--	0	SB--	0	NB--	0	SB--	0	NB--	0	SB--	0	NB--	0	SB--	0	NB--	0	SB--	0			
	EB--	0	WB--	0	EB--	0	WB--	0	EB--	0	WB--	0	EB--	0	WB--	0	EB--	0	WB--	0			
ATSAC-1 or ATSAC+ATCS-2?				2				2				2				2				2			
Override Capacity				0				0				0				0				0			

	MOVEMENT	EXISTING CONDITION			EXISTING PLUS PROJECT			FUTURE CONDITION W/O PROJECT				FUTURE CONDITION W/ PROJECT				FUTURE W/ PROJECT W/ MITIGATION			
		Volume	No. of Lanes	Lane Volume	Project Traffic	Total Volume	Lane Volume	Added Volume	Total Volume	No. of Lanes	Lane Volume	Added Volume	Total Volume	No. of Lanes	Lane Volume	Added Volume	Total Volume	No. of Lanes	Lane Volume
NORTHBOUND	Left	18	1	18	0	18	18	0	19	1	19	0	19	1	19	0	19	1	19
	Left-Through		0							0				0				0	
	Through	801	2	**401**	17	818	**409**	4	842	2	**421**	17	859	2	**430**	0	859	2	**430**
	Through-Right		0							0				0				0	
	Right	224	1	179	13	237	192	0	234	1	187	13	247	1	200	0	247	1	200
	Left-Through-Right		0							0				0				0	
	Left-Right		0							0				0				0	
SOUTHBOUND	Left	112	1	**112**	0	112	**112**	0	117	1	**117**	0	117	1	**117**	0	117	1	**117**
	Left-Through		0							0				0				0	
	Through	817	1	435	0	817	435	6	860	1	457	0	860	1	457	0	860	1	457
	Through-Right		1							1				1				1	
	Right	52	0	52	0	52	52	0	54	0	54	0	54	0	54	0	54	0	54
	Left-Through-Right		0							0				0				0	
	Left-Right		0							0				0				0	
EASTBOUND	Left	118	1	118	0	118	118	0	123	1	123	0	123	1	123	0	123	1	123
	Left-Through		0							0				0				0	
	Through	891	1	**483**	0	891	**483**	0	932	1	**505**	0	932	1	**505**	0	932	1	**505**
	Through-Right		1							1				1				1	
	Right	74	0	74	0	74	74	0	77	0	77	0	77	0	77	0	77	0	77
	Left-Through-Right		0							0				0				0	
	Left-Right		0							0				0				0	
WESTBOUND	Left	90	1	**90**	0	90	**90**	0	94	1	**94**	0	94	1	**94**	0	94	1	**94**
	Left-Through		0							0				0				0	
	Through	654	1	374	0	654	374	0	684	1	391	0	684	1	391	0	684	1	391
	Through-Right		1							1				1				1	
	Right	93	0	93	0	93	93	0	97	0	97	0	97	0	97	0	97	0	97
	Left-Through-Right		0							0				0				0	
	Left-Right		0							0				0				0	
CRITICAL VOLUMES		*North-South:*		513	*North-South:*		521	*North-South:*			538	*North-South:*			547	*North-South:*			547
		East-West:		573	*East-West:*		573	*East-West:*			599	*East-West:*			599	*East-West:*			599
		SUM:		1086	*SUM:*		1094	*SUM:*			1137	*SUM:*			1146	*SUM:*			1146
VOLUME/CAPACITY *(V/C)* RATIO:				0.724			0.729				0.758				0.764				0.764
V/C LESS ATSAC/ATCS ADJUSTMENT:				**0.624**			**0.629**				**0.658**				**0.664**				**0.664**
LEVEL OF SERVICE (LOS):				**B**			**B**				**B**				**B**				**B**

REMARKS: Alt. Route 1: Concurrent Use of All Three Disposal Sites

Version: 1i Beta; 8/4/2011

PROJECT IMPACT

Change in *v/c* due to project:	0.006	Δ*v/c* after mitigation:	0.006
Significant impacted?	NO	Fully mitigated?	N/A

Level of Service Workheet
(Circular 212 Method)

I/S #:	North-South Street:	Laurel Canyon Boulevard	Year of Count:	2015	Ambient Growth: (%):	1.5	Conducted by:	City Traffic Counters	Date:	4/24/2015
CMA9	East-West Street:	I-5 Freeway SB Ramps	Projection Year:	2018	Peak Hour:	AM	Reviewed by:		Project:	Pacoima Reservoir Project/1-13-4

No. of Phases				0				0				0				0				0			
Opposed Ø'ing: N/S-1, E/W-2 or Both-3?				0				0				0				0				0			
Right Turns: FREE-1, NRTOR-2 or OLA-3?	NB--	0	SB--	0	NB--	0	SB--	0	NB--	0	SB--	0	NB--	0	SB--	0	NB--	0	SB--	0			
	EB--	0	WB--	0	EB--	0	WB--	0	EB--	0	WB--	0	EB--	0	WB--	0	EB--	0	WB--	0			
ATSAC-1 or ATSAC+ATCS-2?				0				0				0				0				0			
Override Capacity				1200				1200				1200				1200				1200			

MOVEMENT		EXISTING CONDITION			EXISTING PLUS PROJECT			FUTURE CONDITION W/O PROJECT				FUTURE CONDITION W/ PROJECT				FUTURE W/ PROJECT W/ MITIGATION			
		Volume	No. of Lanes	Lane Volume	Project Traffic	Total Volume	Lane Volume	Added Volume	Total Volume	No. of Lanes	Lane Volume	Added Volume	Total Volume	No. of Lanes	Lane Volume	Added Volume	Total Volume	No. of Lanes	Lane Volume
NORTHBOUND	Left	0	0	0	0	0	0	0	0	0	0	0	0	0	0	0	0	0	0
	Left-Through		0							0				0				0	
	Through	600	1	**365**	0	600	**365**	12	639	1	**387**	0	639	1	**387**	0	639	1	**387**
	Through-Right		1							1				1				1	
	Right	129	0	129	0	129	129	0	135	0	135	0	135	0	135	0	135	0	135
	Left-Through-Right		0							0				0				0	
	Left-Right		0							0				0				0	
SOUTHBOUND	Left	561	1	**561**	0	561	**561**	0	587	1	**587**	0	587	1	**587**	0	587	1	**587**
	Left-Through		0							0				0				0	
	Through	692	2	346	0	692	346	8	732	2	366	0	732	2	366	0	732	2	366
	Through-Right		0							0				0				0	
	Right	0	0	0	0	0	0	0	0	0	0	0	0	0	0	0	0	0	0
	Left-Through-Right		0							0				0				0	
	Left-Right		0							0				0				0	
EASTBOUND	Left	0	0	0	0	0	0	0	0	0	0	0	0	0	0	0	0	0	0
	Left-Through		0							0				0				0	
	Through	0	0	**0**	0	0	**0**	0	0	0	**0**	0	0	0	**0**	0	0	0	**0**
	Through-Right		0							0				0				0	
	Right	0	0	0	0	0	0	0	0	0	0	0	0	0	0	0	0	0	0
	Left-Through-Right		0							0				0				0	
	Left-Right		0							0				0				0	
WESTBOUND	Left	22	1	**22**	0	22	**22**	0	23	1	**23**	0	23	1	**23**	0	23	1	**23**
	Left-Through		0							0				0				0	
	Through	0	0	0	0	0	0	0	0	0	0	0	0	0	0	0	0	0	0
	Through-Right		0							0				0				0	
	Right	93	1	0	30	123	0	0	97	1	0	30	127	1	0	0	127	1	0
	Left-Through-Right		0							0				0				0	
	Left-Right		0							0				0				0	
CRITICAL VOLUMES		*North-South:*		926	*North-South:*		926	*North-South:*			974	*North-South:*			974	*North-South:*			974
		East-West:		22	*East-West:*		22	*East-West:*			23	*East-West:*			23	*East-West:*			23
		SUM:		948	*SUM:*		948	*SUM:*			997	*SUM:*			997	*SUM:*			997
VOLUME/CAPACITY *(V/C)* RATIO:				0.790			0.790				0.831				0.831				0.831
V/C LESS ATSAC/ATCS ADJUSTMENT:				0.790			0.790				0.831				0.831				0.831
LEVEL OF SERVICE (LOS):				C			C				D				D				D

REMARKS: Alt. Route 1: Concurrent Use of All Three Disposal Sites

Version: 1i Beta; 8/4/2011

PROJECT IMPACT

Change in *v/c* due to project:	0.000	Δ*v/c* after mitigation:	0.000
Significant impacted?	NO	Fully mitigated?	N/A

Level of Service Workheet
(Circular 212 Method)

I/S #:	North-South Street:	Laurel Canyon Boulevard	Year of Count:	2015	Ambient Growth: (%):	1.5	Conducted by:	City Traffic Counters	Date:	4/24/2015
CMA9	East-West Street:	I-5 Freeway SB Ramps	Projection Year:	2018	Peak Hour:	Mid-Day	Reviewed by:		Project:	Pacoima Reservoir Project/1-13-4

No. of Phases				0				0				0				0				0			
Opposed Ø'ing: N/S-1, E/W-2 or Both-3?				0				0				0				0				0			
Right Turns: FREE-1, NRTOR-2 or OLA-3?	NB--	0	SB--	0	NB--	0	SB--	0	NB--	0	SB--	0	NB--	0	SB--	0	NB--	0	SB--	0			
	EB--	0	WB--	0	EB--	0	WB--	0	EB--	0	WB--	0	EB--	0	WB--	0	EB--	0	WB--	0			
ATSAC-1 or ATSAC+ATCS-2?				0				0				0				0				0			
Override Capacity				1200				1200				1200				1200				1200			

MOVEMENT		EXISTING CONDITION			EXISTING PLUS PROJECT			FUTURE CONDITION W/O PROJECT				FUTURE CONDITION W/ PROJECT				FUTURE W/ PROJECT W/ MITIGATION			
		Volume	No. of Lanes	Lane Volume	Project Traffic	Total Volume	Lane Volume	Added Volume	Total Volume	No. of Lanes	Lane Volume	Added Volume	Total Volume	No. of Lanes	Lane Volume	Added Volume	Total Volume	No. of Lanes	Lane Volume
NORTHBOUND	Left	0	0	0	0	0	0	0	0	0	0	0	0	0	0	0	0	0	0
	Left-Through		0							0				0				0	
	Through	467	1	**265**	0	467	**265**	1	489	1	**278**	0	489	1	**278**	0	489	1	**278**
	Through-Right		1							1				1				1	
	Right	63	0	63	0	63	63	0	66	0	66	0	66	0	66	0	66	0	66
	Left-Through-Right		0							0				0				0	
	Left-Right		0							0				0				0	
SOUTHBOUND	Left	253	1	**253**	0	253	**253**	0	265	1	**265**	0	265	1	**265**	0	265	1	**265**
	Left-Through		0							0				0				0	
	Through	420	2	210	0	420	210	1	440	2	220	0	440	2	220	0	440	2	220
	Through-Right		0							0				0				0	
	Right	0	0	0	0	0	0	0	0	0	0	0	0	0	0	0	0	0	0
	Left-Through-Right		0							0				0				0	
	Left-Right		0							0				0				0	
EASTBOUND	Left	0	0	0	0	0	0	0	0	0	0	0	0	0	0	0	0	0	0
	Left-Through		0							0				0				0	
	Through	0	0	**0**	0	0	**0**	0	0	0	**0**	0	0	0	**0**	0	0	0	**0**
	Through-Right		0							0				0				0	
	Right	0	0	0	0	0	0	0	0	0	0	0	0	0	0	0	0	0	0
	Left-Through-Right		0							0				0				0	
	Left-Right		0							0				0				0	
WESTBOUND	Left	52	1	**52**	0	52	**52**	0	54	1	**54**	0	54	1	**54**	0	54	1	**54**
	Left-Through		0							0				0				0	
	Through	0	0	0	0	0	0	0	0	0	0	0	0	0	0	0	0	0	0
	Through-Right		0							0				0				0	
	Right	141	1	15	30	171	45	0	147	1	15	30	177	1	45	0	177	1	45
	Left-Through-Right		0							0				0				0	
	Left-Right		0							0				0				0	
CRITICAL VOLUMES		*North-South:*		518	*North-South:*		518	*North-South:*			543	*North-South:*			543	*North-South:*			543
		East-West:		52	*East-West:*		52	*East-West:*			54	*East-West:*			54	*East-West:*			54
		SUM:		570	*SUM:*		570	*SUM:*			597	*SUM:*			597	*SUM:*			597
VOLUME/CAPACITY *(V/C)* RATIO:				0.475			0.475				0.498				0.498				0.498
V/C LESS ATSAC/ATCS ADJUSTMENT:				0.475			0.475				0.498				0.498				0.498
LEVEL OF SERVICE (LOS):				A			A				A				A				A

REMARKS: Alt. Route 1: Concurrent Use of All Three Disposal Sites

Version: 1i Beta; 8/4/2011

PROJECT IMPACT

Change in *v/c* due to project:	0.000	Δ*v/c* after mitigation:	0.000
Significant impacted?	NO	Fully mitigated?	N/A

Level of Service Workheet
(Circular 212 Method)

I/S #:	North-South Street:	Laurel Canyon Boulevard	Year of Count:	2015	Ambient Growth: (%):	1.5	Conducted by:	City Traffic Counters	Date:	4/24/2015
CMA9	East-West Street:	I-5 Freeway SB Ramps	Projection Year:	2018	Peak Hour:	PM	Reviewed by:		Project:	Pacoima Reservoir Project/1-13-4

No. of Phases				0				0				0				0				0			0
Opposed Ø'ing: N/S-1, E/W-2 or Both-3?				0				0				0				0				0			0
Right Turns: FREE-1, NRTOR-2 or OLA-3?	NB--	0	SB--	0	NB--	0	SB--	0	NB--	0	SB--	0	NB--	0	SB--	0	NB--	0	SB--	0	NB--	0	SB-- 0
	EB--	0	WB--	0	EB--	0	WB--	0	EB--	0	WB--	0	EB--	0	WB--	0	EB--	0	WB--	0	EB--	0	WB-- 0
ATSAC-1 or ATSAC+ATCS-2?				0				0				0				0				0			0
Override Capacity				1200				1200				1200				1200				1200			1200

MOVEMENT		EXISTING CONDITION			EXISTING PLUS PROJECT			FUTURE CONDITION W/O PROJECT				FUTURE CONDITION W/ PROJECT				FUTURE W/ PROJECT W/ MITIGATION			
		Volume	No. of Lanes	Lane Volume	Project Traffic	Total Volume	Lane Volume	Added Volume	Total Volume	No. of Lanes	Lane Volume	Added Volume	Total Volume	No. of Lanes	Lane Volume	Added Volume	Total Volume	No. of Lanes	Lane Volume
NORTHBOUND	Left	0	0	0	0	0	0	0	0	0	0	0	0	0	0	0	0	0	0
	Left-Through		0							0				0				0	
	Through	1026	1	**538**	0	1026	**538**	4	1077	1	**565**	0	1077	1	**565**	0	1077	1	**565**
	Through-Right		1							1				1				1	
	Right	50	0	50	0	50	50	0	52	0	52	0	52	0	52	0	52	0	52
	Left-Through-Right		0							0				0				0	
	Left-Right		0							0				0				0	
SOUTHBOUND	Left	391	1	**391**	0	391	**391**	0	409	1	**409**	0	409	1	**409**	0	409	1	**409**
	Left-Through		0							0				0				0	
	Through	564	2	282	0	564	282	6	596	2	298	0	596	2	298	0	596	2	298
	Through-Right		0							0				0				0	
	Right	0	0	0	0	0	0	0	0	0	0	0	0	0	0	0	0	0	0
	Left-Through-Right		0							0				0				0	
	Left-Right		0							0				0				0	
EASTBOUND	Left	0	0	0	0	0	**0**	0	0	0	0	0	0	0	**0**	0	0	0	**0**
	Left-Through		0							0				0				0	
	Through	0	0	**0**	0	0	0	0	0	0	**0**	0	0	0	0	0	0	0	0
	Through-Right		0							0				0				0	
	Right	0	0	0	0	0	0	0	0	0	0	0	0	0	0	0	0	0	0
	Left-Through-Right		0							0				0				0	
	Left-Right		0							0				0				0	
WESTBOUND	Left	37	1	**37**	0	37	37	0	39	1	**39**	0	39	1	39	0	39	1	39
	Left-Through		0							0				0				0	
	Through	0	0	0	0	0	0	0	0	0	0	0	0	0	0	0	0	0	0
	Through-Right		0							0				0				0	
	Right	212	1	17	30	242	**47**	0	222	1	18	30	252	1	**48**	0	252	1	**48**
	Left-Through-Right		0							0				0				0	
	Left-Right		0							0				0				0	
CRITICAL VOLUMES		*North-South:*		929	*North-South:*		929	*North-South:*			974	*North-South:*			974	*North-South:*			974
		East-West:		37	*East-West:*		47	*East-West:*			39	*East-West:*			48	*East-West:*			48
		SUM:		966	*SUM:*		976	*SUM:*			1013	*SUM:*			1022	*SUM:*			1022
VOLUME/CAPACITY *(V/C)* RATIO:				0.805			0.813				0.844				0.852				0.852
V/C LESS ATSAC/ATCS ADJUSTMENT:				0.805			0.813				0.844				0.852				0.852
LEVEL OF SERVICE (LOS):				D			D				D				D				D

REMARKS: Alt. Route 1: Concurrent Use of All Three Disposal Sites

Version: 1i Beta; 8/4/2011

PROJECT IMPACT

Change in *v/c* due to project:	0.008	Δ*v/c* after mitigation:	0.008
Significant impacted?	NO	Fully mitigated?	N/A

Level of Service Workheet
(Circular 212 Method)

I/S #:	North-South Street:	I-5 Freeway NB On-Ramp-Rincon Ave	Year of Count:	2015	Ambient Growth: (%):	1.5	Conducted by:	City Traffic Counters	Date:	4/24/2015
CMA10	East-West Street:	Sheldon Street	Projection Year:	2018	Peak Hour:	AM	Reviewed by:		Project:	Pacoima Reservoir Project/1-13-4

	Existing Condition	Existing Plus Project	Future Condition W/O Project	Future Condition W/ Project	Future W/ Project W/ Mitigation
No. of Phases	0	0	0	0	0
Opposed Ø'ing: N/S-1, E/W-2 or Both-3?	0	0	0	0	0
Right Turns: FREE-1, NRTOR-2 or OLA-3?	NB-- 0 SB-- 0	NB-- 0 SB-- 0	NB-- 0 SB-- 0	NB-- 0 SB-- 0	NB-- 0 SB-- 0
	EB-- 0 WB-- 0	EB-- 0 WB-- 0	EB-- 0 WB-- 0	EB-- 0 WB-- 0	EB-- 0 WB-- 0
ATSAC-1 or ATSAC+ATCS-2?	0	0	0	0	0
Override Capacity	1200	#####	1200	1200	1200

	MOVEMENT	Existing Condition Volume	No. of Lanes	Lane Volume	Existing Plus Project Project Traffic	Total Volume	Lane Volume	Future Condition W/O Project Added Volume	Total Volume	No. of Lanes	Lane Volume	Future Condition W/ Project Added Volume	Total Volume	No. of Lanes	Lane Volume	Future W/ Project W/ Mitigation Added Volume	Total Volume	No. of Lanes	Lane Volume
NORTHBOUND	Left	0	0	**0**	0	0	**0**	0	0	0	**0**	0	0	0	**0**	0	0	0	**0**
	Left-Through		0							0				0				0	
	Through	0	0	0	0	0	0	0	0	0	0	0	0	0	0	0	0	0	0
	Through-Right		0							0				0				0	
	Right	0	0	0	0	0	0	0	0	0	0	0	0	0	0	0	0	0	0
	Left-Through-Right		0							0				0				0	
	Left-Right		0							0				0				0	
SOUTHBOUND	Left	8	0	8	0	8	8	0	8	0	8	0	8	0	8	0	8	0	8
	Left-Through		0							0				0				0	
	Through	2	0	**42**	0	2	**42**	0	2	0	**43**	0	2	0	**43**	0	2	0	**43**
	Through-Right		0							0				0				0	
	Right	32	0	0	0	32	0	0	33	0	0	0	33	0	0	0	33	0	0
	Left-Through-Right		1							1				1				1	
	Left-Right		0							0				0				0	
EASTBOUND	Left	33	1	33	0	33	33	0	35	1	35	0	35	1	35	0	35	1	35
	Left-Through		0							0				0				0	
	Through	962	1	**577**	13	975	**584**	0	1006	1	**604**	13	1019	1	**610**	0	1019	1	**610**
	Through-Right		1							1				1				1	
	Right	192	0	192	0	192	192	0	201	0	201	0	201	0	201	0	201	0	201
	Left-Through-Right		0							0				0				0	
	Left-Right		0							0				0				0	
WESTBOUND	Left	201	1	**201**	30	231	**231**	0	210	1	**210**	30	240	1	**240**	0	240	1	**240**
	Left-Through		0							0				0				0	
	Through	1040	1	534	0	1040	534	0	1088	1	559	0	1088	1	559	0	1088	1	559
	Through-Right		1							1				1				1	
	Right	28	0	28	0	28	28	0	29	0	29	0	29	0	29	0	29	0	29
	Left-Through-Right		0							0				0				0	
	Left-Right		0							0				0				0	
CRITICAL VOLUMES		North-South:		42	North-South:		42	North-South:			43	North-South:			43	North-South:			43
		East-West:		778	East-West:		815	East-West:			814	East-West:			850	East-West:			850
		SUM:		820	SUM:		857	SUM:			857	SUM:			893	SUM:			893
VOLUME/CAPACITY (V/C) RATIO:				0.683			0.714				0.714				0.744				0.744
V/C LESS ATSAC/ATCS ADJUSTMENT:				0.683			0.714				0.714				0.744				0.744
LEVEL OF SERVICE (LOS):				**B**			**C**				**C**				**C**				**C**

REMARKS: Alt. Route 1: Concurrent Use of All Three Disposal Sites

Version: 1i Beta; 8/4/2011

PROJECT IMPACT

Change in *v/c* due to project:	0.030	Δ*v/c* after mitigation:	0.030
Significant impacted?	NO	Fully mitigated?	N/A

Level of Service Workheet
(Circular 212 Method)

I/S #:	North-South Street:	I-5 Freeway NB On-Ramp-Rincon Ave	Year of Count:	2015	Ambient Growth: (%):	1.5	Conducted by:	City Traffic Counters	Date:	4/24/2015
CMA10	East-West Street:	Sheldon Street	Projection Year:	2018	Peak Hour:	Mid-Day	Reviewed by:		Project:	Pacoima Reservoir Project/1-13-4

	EXISTING CONDITION			EXISTING PLUS PROJECT			FUTURE CONDITION W/O PROJECT				FUTURE CONDITION W/ PROJECT				FUTURE W/ PROJECT W/ MITIGATION			
No. of Phases			0			0				0				0				0
Opposed Ø'ing: N/S-1, E/W-2 or Both-3?			0			0				0				0				0
Right Turns: FREE-1, NRTOR-2 or OLA-3?	NB-- 0	SB--	0	NB-- 0	SB--	0	NB-- 0	SB--		0	NB-- 0	SB--		0	NB-- 0	SB--		0
	EB-- 0	WB--	0	EB-- 0	WB--	0	EB-- 0	WB--		0	EB-- 0	WB--		0	EB-- 0	WB--		0
ATSAC-1 or ATSAC+ATCS-2?			0			0				0				0				0
Override Capacity			1200			#####				1200				1200				1200

	MOVEMENT	EXISTING CONDITION Volume	No. of Lanes	Lane Volume	EXISTING PLUS PROJECT Project Traffic	Total Volume	Lane Volume	FUTURE CONDITION W/O PROJECT Added Volume	Total Volume	No. of Lanes	Lane Volume	FUTURE CONDITION W/ PROJECT Added Volume	Total Volume	No. of Lanes	Lane Volume	FUTURE W/ PROJECT W/ MITIGATION Added Volume	Total Volume	No. of Lanes	Lane Volume
NORTHBOUND	Left	0	0	**0**	0	0	**0**	0	0	0	**0**	0	0	0	**0**	0	0	0	**0**
	Left-Through		0							0				0				0	
	Through	0	0	0	0	0	0	0	0	0	0	0	0	0	0	0	0	0	0
	Through-Right		0							0				0				0	
	Right	0	0	0	0	0	0	0	0	0	0	0	0	0	0	0	0	0	0
	Left-Through-Right		0							0				0				0	
	Left-Right		0							0				0				0	
SOUTHBOUND	Left	12	0	12	0	12	12	0	13	0	13	0	13	0	13	0	13	0	13
	Left-Through		0							0				0				0	
	Through	10	0	**53**	0	10	**53**	0	10	0	**55**	0	10	0	**55**	0	10	0	**55**
	Through-Right		0							0				0				0	
	Right	31	0	0	0	31	0	0	32	0	0	0	32	0	0	0	32	0	0
	Left-Through-Right		1							1				1				1	
	Left-Right		0							0				0				0	
EASTBOUND	Left	22	1	22	0	22	22	0	23	1	23	0	23	1	23	0	23	1	23
	Left-Through		0							0				0				0	
	Through	616	1	**381**	13	629	**387**	0	644	1	**398**	13	657	1	**405**	0	657	1	**405**
	Through-Right		1							1				1				1	
	Right	145	0	145	0	145	145	0	152	0	152	0	152	0	152	0	152	0	152
	Left-Through-Right		0							0				0				0	
	Left-Right		0							0				0				0	
WESTBOUND	Left	147	1	**147**	30	177	**177**	0	154	1	**154**	30	184	1	**184**	0	184	1	**184**
	Left-Through		0							0				0				0	
	Through	534	1	276	0	534	276	0	558	1	288	0	558	1	288	0	558	1	288
	Through-Right		1							1				1				1	
	Right	17	0	17	0	17	17	0	18	0	18	0	18	0	18	0	18	0	18
	Left-Through-Right		0							0				0				0	
	Left-Right		0							0				0				0	
CRITICAL VOLUMES		North-South:		53	North-South:		53	North-South:			55	North-South:			55	North-South:			55
		East-West:		528	East-West:		564	East-West:			552	East-West:			589	East-West:			589
		SUM:		581	SUM:		617	SUM:			607	SUM:			644	SUM:			644
VOLUME/CAPACITY (V/C) RATIO:				0.484			0.514				0.506				0.537				0.537
V/C LESS ATSAC/ATCS ADJUSTMENT:				0.484			0.514				0.506				0.537				0.537
LEVEL OF SERVICE (LOS):				A			A				A				A				A

REMARKS: Alt. Route 1: Concurrent Use of All Three Disposal Sites

Version: 1i Beta; 8/4/2011

PROJECT IMPACT

Change in *v/c* due to project:	0.031	$\Delta v/c$ after mitigation:	0.031
Significant impacted?	NO	Fully mitigated?	N/A

Level of Service Workheet
(Circular 212 Method)

I/S #:	North-South Street:	I-5 Freeway NB On-Ramp-Rincon Av	Year of Count:	2015	Ambient Growth: (%):	1.5	Conducted by:	City Traffic Counters	Date:	4/24/2015
CMA10	East-West Street:	Sheldon Street	Projection Year:	2018	Peak Hour:	PM	Reviewed by:		Project:	Pacoima Reservoir Project/1-13-4

	Existing Condition	Existing Plus Project	Future Condition W/O Project	Future Condition W/ Project	Future W/ Project W/ Mitigation
No. of Phases	0	0	0	0	0
Opposed Ø'ing: N/S-1, E/W-2 or Both-3?	0	0	0	0	0
Right Turns: FREE-1, NRTOR-2 or OLA-3?	NB-- 0 SB-- 0	NB-- 0 SB-- 0	NB-- 0 SB-- 0	NB-- 0 SB-- 0	NB-- 0 SB-- 0
	EB-- 0 WB-- 0	EB-- 0 WB-- 0	EB-- 0 WB-- 0	EB-- 0 WB-- 0	EB-- 0 WB-- 0
ATSAC-1 or ATSAC+ATCS-2?	0	0	0	0	0
Override Capacity	1200	1200	1200	1200	1200

	MOVEMENT	Existing Condition Volume	No. of Lanes	Lane Volume	Existing Plus Project Project Traffic	Total Volume	Lane Volume	Future Condition W/O Project Added Volume	Total Volume	No. of Lanes	Lane Volume	Future Condition W/ Project Added Volume	Total Volume	No. of Lanes	Lane Volume	Future W/ Project W/ Mitigation Added Volume	Total Volume	No. of Lanes	Lane Volume
NORTHBOUND	Left	0	0	**0**	0	0	**0**	0	0	0	**0**	0	0	0	**0**	0	0	0	**0**
	Left-Through		0							0				0				0	
	Through	0	0	0	0	0	0	0	0	0	0	0	0	0	0	0	0	0	0
	Through-Right		0							0				0				0	
	Right	0	0	0	0	0	0	0	0	0	0	0	0	0	0	0	0	0	0
	Left-Through-Right		0							0				0				0	
	Left-Right		0							0				0				0	
SOUTHBOUND	Left	10	0	10	0	10	10	0	10	0	10	0	10	0	10	0	10	0	10
	Left-Through		0							0				0				0	
	Through	4	0	**43**	0	4	**43**	0	4	0	**44**	0	4	0	**44**	0	4	0	**44**
	Through-Right		0							0				0				0	
	Right	29	0	0	0	29	0	0	30	0	0	0	30	0	0	0	30	0	0
	Left-Through-Right		1							1				1				1	
	Left-Right		0							0				0				0	
EASTBOUND	Left	42	1	42	0	42	42	0	44	1	44	0	44	1	44	0	44	1	44
	Left-Through		0							0				0				0	
	Through	970	1	**597**	13	983	**603**	0	1014	1	**624**	13	1027	1	**630**	0	1027	1	**630**
	Through-Right		1							1				1				1	
	Right	223	0	223	0	223	223	0	233	0	233	0	233	0	233	0	233	0	233
	Left-Through-Right		0							0				0				0	
	Left-Right		0							0				0				0	
WESTBOUND	Left	131	1	**131**	30	161	**161**	0	137	1	**137**	30	167	1	**167**	0	167	1	**167**
	Left-Through		0							0				0				0	
	Through	817	1	415	0	817	415	0	854	1	434	0	854	1	434	0	854	1	434
	Through-Right		1							1				1				1	
	Right	13	0	13	0	13	13	0	14	0	14	0	14	0	14	0	14	0	14
	Left-Through-Right		0							0				0				0	
	Left-Right		0							0				0				0	
CRITICAL VOLUMES		North-South:		43	North-South:		43	North-South:			44	North-South:			44	North-South:			44
		East-West:		728	East-West:		764	East-West:			761	East-West:			797	East-West:			797
		SUM:		771	SUM:		807	SUM:			805	SUM:			841	SUM:			841
VOLUME/CAPACITY (V/C) RATIO:				0.643			0.673				0.671				0.701				0.701
V/C LESS ATSAC/ATCS ADJUSTMENT:				0.643			0.673				0.671				0.701				0.701
LEVEL OF SERVICE (LOS):				**B**			**B**				**B**				**C**				**C**

REMARKS: Alt. Route 1: Concurrent Use of All Three Disposal Sites

Version: 1i Beta; 8/4/2011

PROJECT IMPACT

Change in *v/c* due to project:	0.030	Δ*v/c* after mitigation:	0.030
Significant impacted?	NO	Fully mitigated?	N/A

Level of Service Workheet
(Circular 212 Method)

I/S #:	North-South Street:	Haddon Avenue	Year of Count:	2015	Ambient Growth: (%):	1.5	Conducted by:	City Traffic Counters	Date:	4/24/2015
CMA11	East-West Street:	Sheldon Street	Projection Year:	2018	Peak Hour:	AM	Reviewed by:		Project:	Pacoima Reservoir Project/1-13-4

	Existing Condition	Existing Plus Project	Future Condition W/O Project	Future Condition W/ Project	Future W/ Project W/ Mitigation
No. of Phases	2	2	2	2	2
Opposed Ø'ing: N/S-1, E/W-2 or Both-3?	0	0	0	0	0
Right Turns: FREE-1, NRTOR-2 or OLA-3?	NB-- 0 SB-- 0 EB-- 0 WB-- 0	NB-- 0 SB-- 0 EB-- 0 WB-- 0	NB-- 0 SB-- 0 EB-- 0 WB-- 0	NB-- 0 SB-- 0 EB-- 0 WB-- 0	NB-- 0 SB-- 0 EB-- 0 WB-- 0
ATSAC-1 or ATSAC+ATCS-2?	2	2	2	2	2
Override Capacity	0	0	0	0	0

	MOVEMENT	Existing Condition Volume	No. of Lanes	Lane Volume	Existing Plus Project Project Traffic	Total Volume	Lane Volume	Future Condition W/O Project Added Volume	Total Volume	No. of Lanes	Lane Volume	Future Condition W/ Project Added Volume	Total Volume	No. of Lanes	Lane Volume	Future W/ Project W/ Mitigation Added Volume	Total Volume	No. of Lanes	Lane Volume
NORTHBOUND	Left	202	0	202	0	202	202	0	211	0	211	0	211	0	211	0	211	0	211
	Left-Through		0							0				0				0	
	Through	29	0	**282**	0	29	**282**	0	30	0	**294**	0	30	0	**294**	0	30	0	**294**
	Through-Right		0							0				0				0	
	Right	51	0	0	0	51	0	0	53	0	0	0	53	0	0	0	53	0	0
	Left-Through-Right		1							1				1				1	
	Left-Right		0							0				0				0	
SOUTHBOUND	Left	31	0	**31**	0	31	**31**	0	32	0	**32**	0	32	0	**32**	0	32	0	**32**
	Left-Through		0							0				0				0	
	Through	40	0	103	0	40	103	0	42	0	107	0	42	0	107	0	42	0	107
	Through-Right		0							0				0				0	
	Right	32	0	0	0	32	0	0	33	0	0	0	33	0	0	0	33	0	0
	Left-Through-Right		1							1				1				1	
	Left-Right		0							0				0				0	
EASTBOUND	Left	12	1	**12**	0	12	**12**	0	13	1	**13**	0	13	1	**13**	0	13	1	**13**
	Left-Through		0							0				0				0	
	Through	747	1	463	13	760	470	0	781	1	484	13	794	1	491	0	794	1	491
	Through-Right		1							1				1				1	
	Right	179	0	179	0	179	179	0	187	0	187	0	187	0	187	0	187	0	187
	Left-Through-Right		0							0				0				0	
	Left-Right		0							0				0				0	
WESTBOUND	Left	38	1	38	0	38	38	0	40	1	40	0	40	1	40	0	40	1	40
	Left-Through		0							0				0				0	
	Through	1036	1	**524**	30	1066	**539**	0	1083	1	**548**	30	1113	1	**563**	0	1113	1	**563**
	Through-Right		1							1				1				1	
	Right	11	0	11	0	11	11	0	12	0	12	0	12	0	12	0	12	0	12
	Left-Through-Right		0							0				0				0	
	Left-Right		0							0				0				0	
CRITICAL VOLUMES		North-South:		313	North-South:		313	North-South:			326	North-South:			326	North-South:			326
		East-West:		536	East-West:		551	East-West:			561	East-West:			576	East-West:			576
		SUM:		849	SUM:		864	SUM:			887	SUM:			902	SUM:			902
VOLUME/CAPACITY (V/C) RATIO:				0.566			0.576				0.591				0.601				0.601
V/C LESS ATSAC/ATCS ADJUSTMENT:				**0.466**			**0.476**				**0.491**				**0.501**				**0.501**
LEVEL OF SERVICE (LOS):				**A**			**A**				**A**				**A**				**A**

REMARKS: Alt. Route 1: Concurrent Use of All Three Disposal Sites

Version: 1i Beta; 8/4/2011

PROJECT IMPACT

Change in *v/c* due to project:	0.010	Δ*v/c* after mitigation:	0.010
Significant impacted?	NO	Fully mitigated?	N/A

Level of Service Workheet
(Circular 212 Method)

I/S #:	North-South Street:	Haddon Avenue	Year of Count:	2015	Ambient Growth: (%):	1.5	Conducted by:	City Traffic Counters	Date:	4/24/2015
CMA11	East-West Street:	Sheldon Street	Projection Year:	2018	Peak Hour:	Mid-Day	Reviewed by:		Project:	Pacoima Reservoir Project/1-13-4

No. of Phases				2				2				2				2				2			2
Opposed Ø'ing: N/S-1, E/W-2 or Both-3?				0				0				0				0				0			0
Right Turns: FREE-1, NRTOR-2 or OLA-3?	NB--	0	SB--	0	NB--	0	SB--	0	NB--	0	SB--	0	NB--	0	SB--	0	NB--	0	SB--	0			
	EB--	0	WB--	0	EB--	0	WB--	0	EB--	0	WB--	0	EB--	0	WB--	0	EB--	0	WB--	0			
ATSAC-1 or ATSAC+ATCS-2?				2				2				2				2				2			2
Override Capacity				0				0				0				0				0			0

MOVEMENT		EXISTING CONDITION			EXISTING PLUS PROJECT			FUTURE CONDITION W/O PROJECT				FUTURE CONDITION W/ PROJECT				FUTURE W/ PROJECT W/ MITIGATION			
		Volume	No. of Lanes	Lane Volume	Project Traffic	Total Volume	Lane Volume	Added Volume	Total Volume	No. of Lanes	Lane Volume	Added Volume	Total Volume	No. of Lanes	Lane Volume	Added Volume	Total Volume	No. of Lanes	Lane Volume
NORTHBOUND	Left	56	0	**56**	0	56	**56**	0	59	0	**59**	0	59	0	**59**	0	59	0	**59**
	Left-Through		0							0				0				0	
	Through	0	0	61	0	0	61	0	0	0	64	0	0	0	64	0	0	0	64
	Through-Right		0							0				0				0	
	Right	5	0	0	0	5	0	0	5	0	0	0	5	0	0	0	5	0	0
	Left-Through-Right		1							1				1				1	
	Left-Right		0							0				0				0	
SOUTHBOUND	Left	10	0	10	0	10	10	0	10	0	10	0	10	0	10	0	10	0	10
	Left-Through		0							0				0				0	
	Through	2	0	**28**	0	2	**28**	0	2	0	**29**	0	2	0	**29**	0	2	0	**29**
	Through-Right		0							0				0				0	
	Right	16	0	0	0	16	0	0	17	0	0	0	17	0	0	0	17	0	0
	Left-Through-Right		1							1				1				1	
	Left-Right		0							0				0				0	
EASTBOUND	Left	8	1	**8**	0	8	**8**	0	8	1	**8**	0	8	1	**8**	0	8	1	**8**
	Left-Through		0							0				0				0	
	Through	599	1	316	13	612	322	0	626	1	330	13	639	1	336	0	639	1	336
	Through-Right		1							1				1				1	
	Right	32	0	32	0	32	32	0	33	0	33	0	33	0	33	0	33	0	33
	Left-Through-Right		0							0				0				0	
	Left-Right		0							0				0				0	
WESTBOUND	Left	6	1	6	0	6	6	0	6	1	6	0	6	1	6	0	6	1	6
	Left-Through		0							0				0				0	
	Through	632	1	**319**	30	662	**334**	0	661	1	**334**	30	691	1	**349**	0	691	1	**349**
	Through-Right		1							1				1				1	
	Right	6	0	6	0	6	6	0	6	0	6	0	6	0	6	0	6	0	6
	Left-Through-Right		0							0				0				0	
	Left-Right		0							0				0				0	
CRITICAL VOLUMES		*North-South:*		84	*North-South:*		84	*North-South:*			88	*North-South:*			88	*North-South:*			88
		East-West:		327	*East-West:*		342	*East-West:*			342	*East-West:*			357	*East-West:*			357
		SUM:		411	*SUM:*		426	*SUM:*			430	*SUM:*			445	*SUM:*			445
VOLUME/CAPACITY *(V/C)* RATIO:				0.274			0.284				0.287				0.297				0.297
V/C LESS ATSAC/ATCS ADJUSTMENT:				**0.174**			**0.184**				**0.187**				**0.197**				**0.197**
LEVEL OF SERVICE (LOS):				**A**			**A**				**A**				**A**				**A**

REMARKS: Alt. Route 1: Concurrent Use of All Three Disposal Sites

Version: 1i Beta; 8/4/2011

PROJECT IMPACT

Change in *v/c* due to project:	0.010	Δ*v/c* after mitigation:	0.010
Significant impacted?	NO	Fully mitigated?	N/A

Level of Service Workheet
(Circular 212 Method)

I/S #:	North-South Street:	Haddon Avenue	Year of Count:	2015	Ambient Growth: (%):	1.5	Conducted by:	City Traffic Counters	Date:	4/24/2015
CMA11	East-West Street:	Sheldon Street	Projection Year:	2018	Peak Hour:	PM	Reviewed by:		Project:	Pacoima Reservoir Project/1-13-4

	Existing Condition	Existing Plus Project	Future Condition W/O Project	Future Condition W/ Project	Future W/ Project W/ Mitigation
No. of Phases	2	2	2	2	2
Opposed Ø'ing: N/S-1, E/W-2 or Both-3?	0	0	0	0	0
Right Turns: FREE-1, NRTOR-2 or OLA-3?	NB-- 0 SB-- 0 EB-- 0 WB-- 0	NB-- 0 SB-- 0 EB-- 0 WB-- 0	NB-- 0 SB-- 0 EB-- 0 WB-- 0	NB-- 0 SB-- 0 EB-- 0 WB-- 0	NB-- 0 SB-- 0 EB-- 0 WB-- 0
ATSAC-1 or ATSAC+ATCS-2?	2	2	2	2	2
Override Capacity	0	0	0	0	0

	MOVEMENT	Existing Condition Volume	No. of Lanes	Lane Volume	Existing Plus Project Project Traffic	Total Volume	Lane Volume	Future Condition W/O Project Added Volume	Total Volume	No. of Lanes	Lane Volume	Future Condition W/ Project Added Volume	Total Volume	No. of Lanes	Lane Volume	Future W/ Project W/ Mitigation Added Volume	Total Volume	No. of Lanes	Lane Volume
NORTHBOUND	Left	99	0	**99**	0	99	**99**	0	104	0	**104**	0	104	0	**104**	0	104	0	**104**
	Left-Through		0							0				0				0	
	Through	10	0	125	0	10	125	0	10	0	131	0	10	0	131	0	10	0	131
	Through-Right		0							0				0				0	
	Right	16	0	0	0	16	0	0	17	0	0	0	17	0	0	0	17	0	0
	Left-Through-Right		1							1				1				1	
	Left-Right		0							0				0				0	
SOUTHBOUND	Left	8	0	8	0	8	8	0	8	0	8	0	8	0	8	0	8	0	8
	Left-Through		0							0				0				0	
	Through	11	0	**37**	0	11	**37**	0	12	0	**39**	0	12	0	**39**	0	12	0	**39**
	Through-Right		0							0				0				0	
	Right	18	0	0	0	18	0	0	19	0	0	0	19	0	0	0	19	0	0
	Left-Through-Right		1							1				1				1	
	Left-Right		0							0				0				0	
EASTBOUND	Left	11	1	11	0	11	11	0	12	1	12	0	12	1	12	0	12	1	12
	Left-Through		0							0				0				0	
	Through	944	1	**520**	13	957	**527**	0	987	1	**544**	13	1000	1	**550**	0	1000	1	**550**
	Through-Right		1							1				1				1	
	Right	96	0	96	0	96	96	0	100	0	100	0	100	0	100	0	100	0	100
	Left-Through-Right		0							0				0				0	
	Left-Right		0							0				0				0	
WESTBOUND	Left	4	1	**4**	0	4	**4**	0	4	1	**4**	0	4	1	**4**	0	4	1	**4**
	Left-Through		0							0				0				0	
	Through	843	1	424	30	873	439	0	882	1	444	30	912	1	459	0	912	1	459
	Through-Right		1							1				1				1	
	Right	5	0	5	0	5	5	0	5	0	5	0	5	0	5	0	5	0	5
	Left-Through-Right		0							0				0				0	
	Left-Right		0							0				0				0	
CRITICAL VOLUMES		North-South:		136	North-South:		136	North-South:			143	North-South:			143	North-South:			143
		East-West:		524	East-West:		531	East-West:			548	East-West:			554	East-West:			554
		SUM:		660	SUM:		667	SUM:			691	SUM:			697	SUM:			697
VOLUME/CAPACITY (V/C) RATIO:				0.440			0.445				0.461				0.465				0.465
V/C LESS ATSAC/ATCS ADJUSTMENT:				**0.340**			**0.345**				**0.361**				**0.365**				**0.365**
LEVEL OF SERVICE (LOS):				**A**			**A**				**A**				**A**				**A**

REMARKS: Alt. Route 1: Concurrent Use of All Three Disposal Sites

Version: 1i Beta; 8/4/2011

PROJECT IMPACT

Change in *v/c* due to project:	0.004	Δ*v/c* after mitigation:	0.004
Significant impacted?	NO	Fully mitigated?	N/A

Level of Service Workheet
(Circular 212 Method)

I/S #:	North-South Street:	Telfair Avenue	Year of Count:	2015	Ambient Growth: (%):	1.5	Conducted by:	City Traffic Counters	Date:	4/24/2015
CMA12	East-West Street:	Sheldon Street	Projection Year:	2018	Peak Hour:	AM	Reviewed by:		Project:	Pacoima Reservoir Project/1-13-4

	Existing Condition	Existing Plus Project	Future Condition W/O Project	Future Condition W/ Project	Future W/ Project W/ Mitigation
No. of Phases	2	2	2	2	2
Opposed Ø'ing: N/S-1, E/W-2 or Both-3?	0	0	0	0	0
Right Turns: FREE-1, NRTOR-2 or OLA-3?	NB-- 0 SB-- 0 EB-- 0 WB-- 0	NB-- 0 SB-- 0 EB-- 0 WB-- 0	NB-- 0 SB-- 0 EB-- 0 WB-- 0	NB-- 0 SB-- 0 EB-- 0 WB-- 0	NB-- 0 SB-- 0 EB-- 0 WB-- 0
ATSAC-1 or ATSAC+ATCS-2?	2	2	2	2	2
Override Capacity	0	0	0	0	0

	MOVEMENT	Existing Condition Volume	No. of Lanes	Lane Volume	Existing Plus Project Project Traffic	Total Volume	Lane Volume	Future Condition W/O Project Added Volume	Total Volume	No. of Lanes	Lane Volume	Future Condition W/ Project Added Volume	Total Volume	No. of Lanes	Lane Volume	Future W/ Project W/ Mitigation Added Volume	Total Volume	No. of Lanes	Lane Volume
NORTHBOUND	Left	134	0	134	0	134	134	0	140	0	140	0	140	0	140	0	140	0	140
	Left-Through		0							0				0				0	
	Through	22	0	**217**	0	22	**217**	0	23	0	**227**	0	23	0	**227**	0	23	0	**227**
	Through-Right		0							0				0				0	
	Right	61	0	0	0	61	0	0	64	0	0	0	64	0	0	0	64	0	0
	Left-Through-Right		1							1				1				1	
	Left-Right		0							0				0				0	
SOUTHBOUND	Left	11	0	**11**	0	11	**11**	0	12	0	**12**	0	12	0	**12**	0	12	0	**12**
	Left-Through		0							0				0				0	
	Through	48	0	89	0	48	89	0	50	0	93	0	50	0	93	0	50	0	93
	Through-Right		0							0				0				0	
	Right	30	0	0	0	30	0	0	31	0	0	0	31	0	0	0	31	0	0
	Left-Through-Right		1							1				1				1	
	Left-Right		0							0				0				0	
EASTBOUND	Left	5	0	**5**	0	5	**5**	0	5	0	**5**	0	5	0	**5**	0	5	0	**5**
	Left-Through		1							1				1				1	
	Through	589	0	380	13	602	387	0	616	0	397	13	629	0	404	0	629	0	404
	Through-Right		1							1				1				1	
	Right	151	0	380	0	151	387	0	158	0	397	0	158	0	404	0	158	0	404
	Left-Through-Right		0							0				0				0	
	Left-Right		0							0				0				0	
WESTBOUND	Left	139	0	139	0	139	139	0	145	0	145	0	145	0	145	0	145	0	145
	Left-Through		1							1				1				1	
	Through	842	0	**715**	30	872	**730**	0	880	0	**746**	30	910	0	**761**	0	910	0	**761**
	Through-Right		1							1				1				1	
	Right	31	0	715	0	31	730	0	32	0	746	0	32	0	761	0	32	0	761
	Left-Through-Right		0							0				0				0	
	Left-Right		0							0				0				0	
CRITICAL VOLUMES		North-South:		228	North-South:		228	North-South:			239	North-South:			239	North-South:			239
		East-West:		720	East-West:		735	East-West:			751	East-West:			766	East-West:			766
		SUM:		948	SUM:		963	SUM:			990	SUM:			1005	SUM:			1005
VOLUME/CAPACITY (V/C) RATIO:				0.632			0.642				0.660				0.670				0.670
V/C LESS ATSAC/ATCS ADJUSTMENT:				0.532			0.542				0.560				0.570				0.570
LEVEL OF SERVICE (LOS):				A			A				A				A				A

REMARKS: Alt. Route 1: Concurrent Use of All Three Disposal Sites

Version: 1i Beta; 8/4/2011

PROJECT IMPACT

Change in *v/c* due to project:	0.010	Δ*v/c* after mitigation:	0.010
Significant impacted?	NO	Fully mitigated?	N/A

Level of Service Workheet
(Circular 212 Method)

I/S #:	North-South Street:	Telfair Avenue	Year of Count:	2015	Ambient Growth: (%):	1.5	Conducted by:	City Traffic Counters	Date:	4/24/2015
CMA12	East-West Street:	Sheldon Street	Projection Year:	2018	Peak Hour:	Mid-Day	Reviewed by:		Project:	Pacoima Reservoir Project/1-13-4

	Existing Condition	Existing Plus Project	Future Condition W/O Project	Future Condition W/ Project	Future W/ Project W/ Mitigation
No. of Phases	2	2	2	2	2
Opposed Ø'ing: N/S-1, E/W-2 or Both-3?	0	0	0	0	0
Right Turns: FREE-1, NRTOR-2 or OLA-3?	NB-- 0 SB-- 0 EB-- 0 WB-- 0	NB-- 0 SB-- 0 EB-- 0 WB-- 0	NB-- 0 SB-- 0 EB-- 0 WB-- 0	NB-- 0 SB-- 0 EB-- 0 WB-- 0	NB-- 0 SB-- 0 EB-- 0 WB-- 0
ATSAC-1 or ATSAC+ATCS-2?	2	2	2	2	2
Override Capacity	0	0	0	0	0

MOVEMENT		Existing Condition Volume	No. of Lanes	Lane Volume	Existing Plus Project Project Traffic	Total Volume	Lane Volume	Future Condition W/O Project Added Volume	Total Volume	No. of Lanes	Lane Volume	Future Condition W/ Project Added Volume	Total Volume	No. of Lanes	Lane Volume	Future W/ Project W/ Mitigation Added Volume	Total Volume	No. of Lanes	Lane Volume
NORTHBOUND	Left	37	0	37	0	37	37	0	39	0	39	0	39	0	39	0	39	0	39
	Left-Through		0							0				0				0	
	Through	4	0	**59**	0	4	**59**	0	4	0	**62**	0	4	0	**62**	0	4	0	**62**
	Through-Right		0							0				0				0	
	Right	18	0	0	0	18	0	0	19	0	0	0	19	0	0	0	19	0	0
	Left-Through-Right		1							1				1				1	
	Left-Right		0							0				0				0	
SOUTHBOUND	Left	0	0	**0**	0	0	**0**	0	0	0	**0**	0	0	0	**0**	0	0	0	**0**
	Left-Through		0							0				0				0	
	Through	2	0	17	0	2	17	0	2	0	18	0	2	0	18	0	2	0	18
	Through-Right		0							0				0				0	
	Right	15	0	0	0	15	0	0	16	0	0	0	16	0	0	0	16	0	0
	Left-Through-Right		1							1				1				1	
	Left-Right		0							0				0				0	
EASTBOUND	Left	6	0	6	0	6	**6**	0	6	0	6	0	6	0	**6**	0	6	0	**6**
	Left-Through		1							1				1				1	
	Through	559	0	**302**	13	572	308	0	585	0	**315**	13	598	0	322	0	598	0	322
	Through-Right		1							1				1				1	
	Right	32	0	302	0	32	308	0	33	0	315	0	33	0	322	0	33	0	322
	Left-Through-Right		0							0				0				0	
	Left-Right		0							0				0				0	
WESTBOUND	Left	32	0	**32**	0	32	32	0	33	0	**33**	0	33	0	33	0	33	0	33
	Left-Through		1							1				1				1	
	Through	497	0	295	30	527	**342**	0	520	0	341	30	550	0	**356**	0	550	0	**356**
	Through-Right		1							1				1				1	
	Right	28	0	295	0	28	342	0	29	0	341	0	29	0	356	0	29	0	356
	Left-Through-Right		0							0				0				0	
	Left-Right		0							0				0				0	
CRITICAL VOLUMES		North-South:		59	North-South:		59	North-South:			62	North-South:			62	North-South:			62
		East-West:		334	East-West:		348	East-West:			348	East-West:			362	East-West:			362
		SUM:		393	SUM:		407	SUM:			410	SUM:			424	SUM:			424
VOLUME/CAPACITY (V/C) RATIO:				0.262			0.271				0.273				0.283				0.283
V/C LESS ATSAC/ATCS ADJUSTMENT:				**0.162**			**0.171**				**0.173**				**0.183**				**0.183**
LEVEL OF SERVICE (LOS):				**A**			**A**				**A**				**A**				**A**

REMARKS: Alt. Route 1: Concurrent Use of All Three Disposal Sites

Version: 1i Beta; 8/4/2011

PROJECT IMPACT

Change in *v/c* due to project:	0.010	Δ*v/c* after mitigation:	0.010
Significant impacted?	NO	Fully mitigated?	N/A

Level of Service Workheet
(Circular 212 Method)

I/S #:	North-South Street:	Telfair Avenue	Year of Count:	2015	Ambient Growth: (%):	1.5	Conducted by:	City Traffic Counters	Date:	4/24/2015
CMA12	East-West Street:	Sheldon Street	Projection Year:	2018	Peak Hour:	PM	Reviewed by:		Project:	Pacoima Reservoir Project/1-13-4

	Existing Condition	Existing Plus Project	Future Condition W/O Project	Future Condition W/ Project	Future W/ Project W/ Mitigation
No. of Phases	2	2	2	2	2
Opposed Ø'ing: N/S-1, E/W-2 or Both-3?	0	0	0	0	0
Right Turns: FREE-1, NRTOR-2 or OLA-3?	NB-- 0 SB-- 0 EB-- 0 WB-- 0	NB-- 0 SB-- 0 EB-- 0 WB-- 0	NB-- 0 SB-- 0 EB-- 0 WB-- 0	NB-- 0 SB-- 0 EB-- 0 WB-- 0	NB-- 0 SB-- 0 EB-- 0 WB-- 0
ATSAC-1 or ATSAC+ATCS-2?	2	2	2	2	2
Override Capacity	0	0	0	0	0

	MOVEMENT	Existing Condition Volume	No. of Lanes	Lane Volume	Existing Plus Project Project Traffic	Total Volume	Lane Volume	Future Condition W/O Project Added Volume	Total Volume	No. of Lanes	Lane Volume	Future Condition W/ Project Added Volume	Total Volume	No. of Lanes	Lane Volume	Future W/ Project W/ Mitigation Added Volume	Total Volume	No. of Lanes	Lane Volume
NORTHBOUND	Left	90	0	90	0	90	90	0	94	0	94	0	94	0	94	0	94	0	94
	Left-Through		0							0				0				0	
	Through	7	0	**149**	0	7	**149**	0	7	0	**155**	0	7	0	**155**	0	7	0	**155**
	Through-Right		0							0				0				0	
	Right	52	0	0	0	52	0	0	54	0	0	0	54	0	0	0	54	0	0
	Left-Through-Right		1							1				1				1	
	Left-Right		0							0				0				0	
SOUTHBOUND	Left	4	0	**4**	0	4	**4**	0	4	0	**4**	0	4	0	**4**	0	4	0	**4**
	Left-Through		0							0				0				0	
	Through	6	0	37	0	6	37	0	6	0	38	0	6	0	38	0	6	0	38
	Through-Right		0							0				0				0	
	Right	27	0	0	0	27	0	0	28	0	0	0	28	0	0	0	28	0	0
	Left-Through-Right		1							1				1				1	
	Left-Right		0							0				0				0	
EASTBOUND	Left	10	0	10	0	10	10	0	10	0	10	0	10	0	10	0	10	0	10
	Left-Through		1							1				1				1	
	Through	739	0	**446**	13	752	**452**	0	773	0	**465**	13	786	0	**472**	0	786	0	**472**
	Through-Right		1							1				1				1	
	Right	112	0	446	0	112	452	0	117	0	465	0	117	0	472	0	117	0	472
	Left-Through-Right		0							0				0				0	
	Left-Right		0							0				0				0	
WESTBOUND	Left	54	0	**54**	0	54	**54**	0	56	0	**56**	0	56	0	**56**	0	56	0	**56**
	Left-Through		1							1				1				1	
	Through	647	0	437	30	677	452	0	677	0	457	30	707	0	472	0	707	0	472
	Through-Right		1							1				1				1	
	Right	11	0	437	0	11	452	0	12	0	457	0	12	0	472	0	12	0	472
	Left-Through-Right		0							0				0				0	
	Left-Right		0							0				0				0	
CRITICAL VOLUMES		North-South:		153	North-South:		153	North-South:			159	North-South:			159	North-South:			159
		East-West:		500	East-West:		506	East-West:			521	East-West:			528	East-West:			528
		SUM:		653	SUM:		659	SUM:			680	SUM:			687	SUM:			687
VOLUME/CAPACITY (V/C) RATIO:				0.435			0.439				0.453				0.458				0.458
V/C LESS ATSAC/ATCS ADJUSTMENT:				0.335			0.339				0.353				0.358				0.358
LEVEL OF SERVICE (LOS):				A			A				A				A				A

REMARKS: Alt. Route 1: Concurrent Use of All Three Disposal Sites

Version: 1i Beta; 8/4/2011

PROJECT IMPACT

Change in *v/c* due to project:	0.005	Δ*v/c* after mitigation:	0.005
Significant impacted?	NO	Fully mitigated?	N/A

Level of Service Workheet
(Circular 212 Method)

I/S #:	North-South Street:	San Fernando Road	Year of Count:	2015	Ambient Growth: (%):	1.5	Conducted by:	City Traffic Counters	Date:	4/24/2015
CMA13	East-West Street:	Sheldon Street	Projection Year:	2018	Peak Hour:	AM	Reviewed by:		Project:	Pacoima Reservoir Project/1-13-4

	EXISTING CONDITION	EXISTING PLUS PROJECT	FUTURE CONDITION W/O PROJECT	FUTURE CONDITION W/ PROJECT	FUTURE W/ PROJECT W/ MITIGATION
No. of Phases	4	4	4	4	4
Opposed Ø'ing: N/S-1, E/W-2 or Both-3?	0	0	0	0	0
Right Turns: FREE-1, NRTOR-2 or OLA-3?	NB-- 0 SB-- 0 EB-- 0 WB-- 0	NB-- 0 SB-- 0 EB-- 0 WB-- 0	NB-- 0 SB-- 0 EB-- 0 WB-- 0	NB-- 0 SB-- 0 EB-- 0 WB-- 0	NB-- 0 SB-- 0 EB-- 0 WB-- 0
ATSAC-1 or ATSAC+ATCS-2?	2	2	2	2	2
Override Capacity	0	0	0	0	0

	MOVEMENT	EXISTING CONDITION Volume	No. of Lanes	Lane Volume	EXISTING PLUS PROJECT Project Traffic	Total Volume	Lane Volume	FUTURE CONDITION W/O PROJECT Added Volume	Total Volume	No. of Lanes	Lane Volume	FUTURE CONDITION W/ PROJECT Added Volume	Total Volume	No. of Lanes	Lane Volume	FUTURE W/ PROJECT W/ MITIGATION Added Volume	Total Volume	No. of Lanes	Lane Volume
NORTHBOUND	Left	178	1	**178**	0	178	**178**	0	186	1	**186**	0	186	1	**186**	0	186	1	**186**
	Left-Through		0							0				0				0	
	Through	728	1	403	0	728	403	4	765	1	423	0	765	1	423	0	765	1	423
	Through-Right		1							1				1				1	
	Right	77	0	77	0	77	77	0	81	0	81	0	81	0	81	0	81	0	81
	Left-Through-Right		0							0				0				0	
	Left-Right		0							0				0				0	
SOUTHBOUND	Left	97	1	97	20	117	117	0	101	1	101	20	121	1	121	0	121	1	121
	Left-Through		0							0				0				0	
	Through	558	1	**339**	0	558	**344**	8	591	1	**358**	0	591	1	**363**	0	591	1	**363**
	Through-Right		1							1				1				1	
	Right	119	0	119	10	129	129	0	124	0	124	10	134	0	134	0	134	0	134
	Left-Through-Right		0							0				0				0	
	Left-Right		0							0				0				0	
EASTBOUND	Left	53	1	**53**	0	53	**53**	0	55	1	**55**	0	55	1	**55**	0	55	1	**55**
	Left-Through		0							0				0				0	
	Through	433	1	292	13	446	298	0	453	1	305	13	466	1	312	0	466	1	312
	Through-Right		1							1				1				1	
	Right	150	0	150	0	150	150	0	157	0	157	0	157	0	157	0	157	0	157
	Left-Through-Right		0							0				0				0	
	Left-Right		0							0				0				0	
WESTBOUND	Left	144	1	144	0	144	144	0	151	1	151	0	151	1	151	0	151	1	151
	Left-Through		0							0				0				0	
	Through	1022	1	**581**	20	1042	**597**	0	1069	1	**607**	20	1089	1	**624**	0	1089	1	**624**
	Through-Right		1							1				1				1	
	Right	139	0	139	13	152	152	0	145	0	145	13	158	0	158	0	158	0	158
	Left-Through-Right		0							0				0				0	
	Left-Right		0							0				0				0	
CRITICAL VOLUMES		*North-South:*		517	*North-South:*		522	*North-South:*			544	*North-South:*			549	*North-South:*			549
		East-West:		634	*East-West:*		650	*East-West:*			662	*East-West:*			679	*East-West:*			679
		SUM:		1151	*SUM:*		1172	*SUM:*			1206	*SUM:*			1228	*SUM:*			1228
VOLUME/CAPACITY *(V/C)* RATIO:				0.837			0.852				0.877				0.893				0.893
V/C LESS ATSAC/ATCS ADJUSTMENT:				**0.737**			**0.752**				**0.777**				**0.793**				**0.793**
LEVEL OF SERVICE (LOS):				**C**			**C**				**C**				**C**				**C**

REMARKS: Alt. Route 1: Concurrent Use of All Three Disposal Sites

Version: 1i Beta; 8/4/2011

PROJECT IMPACT

Change in *v/c* due to project:	0.016	Δ*v/c* after mitigation:	0.016
Significant impacted?	NO	Fully mitigated?	N/A

Level of Service Workheet
(Circular 212 Method)

I/S #:	North-South Street:	San Fernando Road	Year of Count:	2015	Ambient Growth: (%):	1.5	Conducted by:	City Traffic Counters	Date:	4/24/2015
CMA13	East-West Street:	Sheldon Street	Projection Year:	2018	Peak Hour:	Mid-Day	Reviewed by:		Project:	Pacoima Reservoir Project/1-13-4

No. of Phases				4				4				4				4				4			4
Opposed Ø'ing: N/S-1, E/W-2 or Both-3?				0				0				0				0				0			0
Right Turns: FREE-1, NRTOR-2 or OLA-3?	NB--	0	SB--	0	NB--	0	SB--	0	NB--	0	SB--	0	NB--	0	SB--	0	NB--	0	SB--	0	NB--	0	SB-- 0
	EB--	0	WB--	0	EB--	0	WB--	0	EB--	0	WB--	0	EB--	0	WB--	0	EB--	0	WB--	0	EB--	0	WB-- 0
ATSAC-1 or ATSAC+ATCS-2?				2				2				2				2				2			2
Override Capacity				0				0				0				0				0			0

	MOVEMENT	EXISTING CONDITION			EXISTING PLUS PROJECT			FUTURE CONDITION W/O PROJECT				FUTURE CONDITION W/ PROJECT				FUTURE W/ PROJECT W/ MITIGATION			
		Volume	No. of Lanes	Lane Volume	Project Traffic	Total Volume	Lane Volume	Added Volume	Total Volume	No. of Lanes	Lane Volume	Added Volume	Total Volume	No. of Lanes	Lane Volume	Added Volume	Total Volume	No. of Lanes	Lane Volume
NORTHBOUND	Left	121	1	**121**	0	121	**121**	0	127	1	**127**	0	127	1	**127**	0	127	1	**127**
	Left-Through		0							0				0				0	
	Through	389	1	236	0	389	236	8	415	1	251	0	415	1	251	0	415	1	251
	Through-Right		1							1				1				1	
	Right	82	0	82	0	82	82	0	86	0	86	0	86	0	86	0	86	0	86
	Left-Through-Right		0							0				0				0	
	Left-Right		0							0				0				0	
SOUTHBOUND	Left	70	1	70	20	90	90	0	73	1	73	20	93	1	93	0	93	1	93
	Left-Through		0							0				0				0	
	Through	356	1	**209**	0	356	**214**	6	378	1	**222**	0	378	1	**227**	0	378	1	**227**
	Through-Right		1							1				1				1	
	Right	62	0	62	10	72	72	0	65	0	65	10	75	0	75	0	75	0	75
	Left-Through-Right		0							0				0				0	
	Left-Right		0							0				0				0	
EASTBOUND	Left	65	1	65	0	65	65	0	68	1	68	0	68	1	68	0	68	1	68
	Left-Through		0							0				0				0	
	Through	465	1	**288**	13	478	**295**	0	486	1	**301**	13	499	1	**308**	0	499	1	**308**
	Through-Right		1							1				1				1	
	Right	111	0	111	0	111	111	0	116	0	116	0	116	0	116	0	116	0	116
	Left-Through-Right		0							0				0				0	
	Left-Right		0							0				0				0	
WESTBOUND	Left	84	1	**84**	0	84	**84**	0	88	1	**88**	0	88	1	**88**	0	88	1	**88**
	Left-Through		0							0				0				0	
	Through	441	1	260	20	461	276	0	461	1	272	20	481	1	288	0	481	1	288
	Through-Right		1							1				1				1	
	Right	78	0	78	13	91	91	0	82	0	82	13	95	0	95	0	95	0	95
	Left-Through-Right		0							0				0				0	
	Left-Right		0							0				0				0	
CRITICAL VOLUMES		*North-South:*		330	*North-South:*		335	*North-South:*			349	*North-South:*			354	*North-South:*			354
		East-West:		372	*East-West:*		379	*East-West:*			389	*East-West:*			396	*East-West:*			396
		SUM:		702	*SUM:*		714	*SUM:*			738	*SUM:*			750	*SUM:*			750
VOLUME/CAPACITY *(V/C)* RATIO:				0.511			0.519				0.537				0.545				0.545
V/C LESS ATSAC/ATCS ADJUSTMENT:				**0.411**			**0.419**				**0.437**				**0.445**				**0.445**
LEVEL OF SERVICE (LOS):				**A**			**A**				**A**				**A**				**A**

REMARKS: Alt. Route 1: Concurrent Use of All Three Disposal Sites

Version: 1i Beta; 8/4/2011

PROJECT IMPACT

Change in *v/c* due to project:	0.008	Δ*v/c* after mitigation:	0.008
Significant impacted?	NO	Fully mitigated?	N/A

Level of Service Workheet
(Circular 212 Method)

I/S #:	North-South Street:	San Fernando Road	Year of Count:	2015	Ambient Growth: (%):	1.5	Conducted by:	City Traffic Counters	Date:	4/24/2015
CMA13	East-West Street:	Sheldon Street	Projection Year:	2018	Peak Hour:	PM	Reviewed by:		Project:	Pacoima Reservoir Project/1-13-4

No. of Phases				4				4				4				4				4			4
Opposed Ø'ing: N/S-1, E/W-2 or Both-3?				0				0				0				0				0			0
Right Turns: FREE-1, NRTOR-2 or OLA-3?	NB--	0	SB--	0	NB--	0	SB--	0	NB--	0	SB--	0	NB--	0	SB--	0	NB--	0	SB--	0	NB--	0	SB-- 0
	EB--	0	WB--	0	EB--	0	WB--	0	EB--	0	WB--	0	EB--	0	WB--	0	EB--	0	WB--	0	EB--	0	WB-- 0
ATSAC-1 or ATSAC+ATCS-2?				2				2				2				2				2			2
Override Capacity				0				0				0				0				0			0

MOVEMENT		EXISTING CONDITION			EXISTING PLUS PROJECT			FUTURE CONDITION W/O PROJECT				FUTURE CONDITION W/ PROJECT				FUTURE W/ PROJECT W/ MITIGATION			
		Volume	No. of Lanes	Lane Volume	Project Traffic	Total Volume	Lane Volume	Added Volume	Total Volume	No. of Lanes	Lane Volume	Added Volume	Total Volume	No. of Lanes	Lane Volume	Added Volume	Total Volume	No. of Lanes	Lane Volume
NORTHBOUND	Left	191	1	**191**	0	191	**191**	0	200	1	**200**	0	200	1	**200**	0	200	1	**200**
	Left-Through		0							0				0				0	
	Through	553	1	332	0	553	332	8	586	1	351	0	586	1	351	0	586	1	351
	Through-Right		1							1				1				1	
	Right	110	0	110	0	110	110	0	115	0	115	0	115	0	115	0	115	0	115
	Left-Through-Right		0							0				0				0	
	Left-Right		0							0				0				0	
SOUTHBOUND	Left	94	1	94	20	114	114	0	98	1	98	20	118	1	118	0	118	1	118
	Left-Through		0							0				0				0	
	Through	573	1	**315**	0	573	**320**	6	605	1	**332**	0	605	1	**337**	0	605	1	**337**
	Through-Right		1							1				1				1	
	Right	56	0	56	10	66	66	0	59	0	59	10	69	0	69	0	69	0	69
	Left-Through-Right		0							0				0				0	
	Left-Right		0							0				0				0	
EASTBOUND	Left	86	1	86	0	86	86	0	90	1	90	0	90	1	90	0	90	1	90
	Left-Through		0							0				0				0	
	Through	734	1	**436**	13	747	**443**	0	768	1	**456**	13	781	1	**463**	0	781	1	**463**
	Through-Right		1							1				1				1	
	Right	138	0	138	0	138	138	0	144	0	144	0	144	0	144	0	144	0	144
	Left-Through-Right		0							0				0				0	
	Left-Right		0							0				0				0	
WESTBOUND	Left	97	1	**97**	0	97	**97**	0	101	1	**101**	0	101	1	**101**	0	101	1	**101**
	Left-Through		0							0				0				0	
	Through	541	1	313	20	561	329	0	566	1	327	20	586	1	344	0	586	1	344
	Through-Right		1							1				1				1	
	Right	84	0	84	13	97	97	0	88	0	88	13	101	0	101	0	101	0	101
	Left-Through-Right		0							0				0				0	
	Left-Right		0							0				0				0	
CRITICAL VOLUMES		*North-South:*		506	*North-South:*		511	*North-South:*			532	*North-South:*			537	*North-South:*			537
		East-West:		533	*East-West:*		540	*East-West:*			557	*East-West:*			564	*East-West:*			564
		SUM:		1039	*SUM:*		1051	*SUM:*			1089	*SUM:*			1101	*SUM:*			1101
VOLUME/CAPACITY *(V/C)* RATIO:				0.756			0.764				0.792				0.801				0.801
V/C LESS ATSAC/ATCS ADJUSTMENT:				**0.656**			**0.664**				**0.692**				**0.701**				**0.701**
LEVEL OF SERVICE (LOS):				**B**			**B**				**B**				**C**				**C**

REMARKS: Alt. Route 1: Concurrent Use of All Three Disposal Sites

Version: 1i Beta; 8/4/2011

PROJECT IMPACT

Change in *v/c* due to project:	0.009	Δ*v/c* after mitigation:	0.009
Significant impacted?	NO	Fully mitigated?	N/A

Level of Service Workheet
(Circular 212 Method)

I/S #:	North-South Street:	Glenoaks Boulevard	Year of Count:	2015	Ambient Growth: (%):	1.5	Conducted by:	City Traffic Counters	Date:	5/8/2015
CMA14	East-West Street:	Sheldon Street	Projection Year:	2018	Peak Hour:	AM	Reviewed by:		Project:	Pacoima Reservoir Project/1-13-4

No. of Phases				2				2				2				2				2			2
Opposed Ø'ing: N/S-1, E/W-2 or Both-3?				0				0				0				0				0			0
Right Turns: FREE-1, NRTOR-2 or OLA-3?	NB--	0	SB--	0	NB--	0	SB--	0	NB--	0	SB--	0	NB--	0	SB--	0	NB--	0	SB--	0	NB--	0	SB-- 0
	EB--	0	WB--	0	EB--	0	WB--	0	EB--	0	WB--	0	EB--	0	WB--	0	EB--	0	WB--	0	EB--	0	WB-- 0
ATSAC-1 or ATSAC+ATCS-2?				2				2				2				2				2			2
Override Capacity				0				0				0				0				0			0

MOVEMENT		EXISTING CONDITION			EXISTING PLUS PROJECT			FUTURE CONDITION W/O PROJECT				FUTURE CONDITION W/ PROJECT				FUTURE W/ PROJECT W/ MITIGATION			
		Volume	No. of Lanes	Lane Volume	Project Traffic	Total Volume	Lane Volume	Added Volume	Total Volume	No. of Lanes	Lane Volume	Added Volume	Total Volume	No. of Lanes	Lane Volume	Added Volume	Total Volume	No. of Lanes	Lane Volume
NORTHBOUND	Left	129	1	**129**	16	145	**145**	0	135	1	**135**	16	151	1	**151**	0	151	1	**151**
	Left-Through		0							0				0				0	
	Through	400	2	200	0	400	200	14	432	2	216	0	432	2	216	0	432	2	216
	Through-Right		0							0				0				0	
	Right	57	1	17	0	57	17	0	60	1	18	0	60	1	18	0	60	1	18
	Left-Through-Right		0							0				0				0	
	Left-Right		0							0				0				0	
SOUTHBOUND	Left	108	1	108	0	108	108	34	147	1	147	0	147	1	147	0	147	1	147
	Left-Through		0							0				0				0	
	Through	1154	1	**724**	0	1154	**724**	22	1229	1	**768**	0	1229	1	**768**	0	1229	1	**768**
	Through-Right		1							1				1				1	
	Right	293	0	293	0	293	293	0	306	0	306	0	306	0	306	0	306	0	306
	Left-Through-Right		0							0				0				0	
	Left-Right		0							0				0				0	
EASTBOUND	Left	202	1	**202**	0	202	**202**	0	211	1	**211**	0	211	1	**211**	0	211	1	**211**
	Left-Through		0							0				0				0	
	Through	250	1	182	33	283	198	0	261	1	190	33	294	1	206	0	294	1	206
	Through-Right		1							1				1				1	
	Right	113	0	113	0	113	113	0	118	0	118	0	118	0	118	0	118	0	118
	Left-Through-Right		0							0				0				0	
	Left-Right		0							0				0				0	
WESTBOUND	Left	81	1	81	0	81	81	0	85	1	85	0	85	1	85	0	85	1	85
	Left-Through		0							0				0				0	
	Through	444	1	**256**	17	461	**265**	0	464	1	**285**	17	481	1	**293**	0	481	1	**293**
	Through-Right		1							1				1				1	
	Right	68	0	68	0	68	68	34	105	0	105	0	105	0	105	0	105	0	105
	Left-Through-Right		0							0				0				0	
	Left-Right		0							0				0				0	
CRITICAL VOLUMES		*North-South:*		853	*North-South:*		869	*North-South:*			903	*North-South:*			919	*North-South:*			919
		East-West:		458	*East-West:*		467	*East-West:*			496	*East-West:*			504	*East-West:*			504
		SUM:		1311	*SUM:*		1336	*SUM:*			1399	*SUM:*			1423	*SUM:*			1423
VOLUME/CAPACITY *(V/C)* RATIO:				0.874			0.891				0.933				0.949				0.949
V/C LESS ATSAC/ATCS ADJUSTMENT:				**0.774**			**0.791**				**0.833**				**0.849**				**0.849**
LEVEL OF SERVICE (LOS):				**C**			**C**				**D**				**D**				**D**

REMARKS: Alt. Route 1: Concurrent Use of All Three Disposal Sites

Version: 1i Beta; 8/4/2011

PROJECT IMPACT

Change in *v/c* due to project:	0.016	Δ*v/c* after mitigation:	0.016
Significant impacted?	NO	Fully mitigated?	N/A

Level of Service Workheet
(Circular 212 Method)

I/S #:	North-South Street:	Glenoaks Boulevard	Year of Count:	2015	Ambient Growth: (%):	1.5	Conducted by:	City Traffic Counters	Date:	5/8/2015
CMA14	East-West Street:	Sheldon Street	Projection Year:	2018	Peak Hour:	Mid-Day	Reviewed by:		Project:	Pacoima Reservoir Project/1-13-4

No. of Phases				2				2				2				2				2			2
Opposed Ø'ing: N/S-1, E/W-2 or Both-3?				0				0				0				0				0			0
Right Turns: FREE-1, NRTOR-2 or OLA-3?	NB--	0	SB--	0	NB--	0	SB--	0	NB--	0	SB--	0	NB--	0	SB--	0	NB--	0	SB--	0	NB--	0	SB-- 0
	EB--	0	WB--	0	EB--	0	WB--	0	EB--	0	WB--	0	EB--	0	WB--	0	EB--	0	WB--	0	EB--	0	WB-- 0
ATSAC-1 or ATSAC+ATCS-2?				2				2				2				2				2			2
Override Capacity				0				0				0				0				0			0

MOVEMENT		EXISTING CONDITION			EXISTING PLUS PROJECT			FUTURE CONDITION W/O PROJECT				FUTURE CONDITION W/ PROJECT				FUTURE W/ PROJECT W/ MITIGATION			
		Volume	No. of Lanes	Lane Volume	Project Traffic	Total Volume	Lane Volume	Added Volume	Total Volume	No. of Lanes	Lane Volume	Added Volume	Total Volume	No. of Lanes	Lane Volume	Added Volume	Total Volume	No. of Lanes	Lane Volume
NORTHBOUND	Left	186	1	**186**	16	202	**202**	0	194	1	**194**	16	210	1	**210**	0	210	1	**210**
	Left-Through		0							0				0				0	
	Through	436	2	218	0	436	218	21	477	2	239	0	477	2	239	0	477	2	239
	Through-Right		0							0				0				0	
	Right	51	1	29	0	51	29	0	53	1	30	0	53	1	30	0	53	1	30
	Left-Through-Right		0							0				0				0	
	Left-Right		0							0				0				0	
SOUTHBOUND	Left	85	1	85	0	85	85	34	123	1	123	0	123	1	123	0	123	1	123
	Left-Through		0							0				0				0	
	Through	482	1	**313**	0	482	**313**	15	519	1	**335**	0	519	1	**335**	0	519	1	**335**
	Through-Right		1							1				1				1	
	Right	144	0	144	0	144	144	0	151	0	151	0	151	0	151	0	151	0	151
	Left-Through-Right		0							0				0				0	
	Left-Right		0							0				0				0	
EASTBOUND	Left	172	1	**172**	0	172	**172**	0	180	1	**180**	0	180	1	**180**	0	180	1	**180**
	Left-Through		0							0				0				0	
	Through	241	1	175	33	274	192	0	252	1	183	33	285	1	200	0	285	1	200
	Through-Right		1							1				1				1	
	Right	109	0	109	0	109	109	0	114	0	114	0	114	0	114	0	114	0	114
	Left-Through-Right		0							0				0				0	
	Left-Right		0							0				0				0	
WESTBOUND	Left	45	1	45	0	45	45	0	47	1	47	0	47	1	47	0	47	1	47
	Left-Through		0							0				0				0	
	Through	173	1	**115**	17	190	**123**	0	181	1	**137**	17	198	1	**146**	0	198	1	**146**
	Through-Right		1							1				1				1	
	Right	56	0	56	0	56	56	34	93	0	93	0	93	0	93	0	93	0	93
	Left-Through-Right		0							0				0				0	
	Left-Right		0							0				0				0	
CRITICAL VOLUMES		*North-South:*		499	*North-South:*		515	*North-South:*			529	*North-South:*			545	*North-South:*			545
		East-West:		287	*East-West:*		295	*East-West:*			317	*East-West:*			326	*East-West:*			326
		SUM:		786	*SUM:*		810	*SUM:*			846	*SUM:*			871	*SUM:*			871
VOLUME/CAPACITY *(V/C)* RATIO:				0.524			0.540				0.564				0.581				0.581
V/C LESS ATSAC/ATCS ADJUSTMENT:				**0.424**			**0.440**				**0.464**				**0.481**				**0.481**
LEVEL OF SERVICE (LOS):				**A**			**A**				**A**				**A**				**A**

REMARKS: Alt. Route 1: Concurrent Use of All Three Disposal Sites

Version: 1i Beta; 8/4/2011

PROJECT IMPACT

Change in *v/c* due to project:	0.017	Δ*v/c* after mitigation:	0.017
Significant impacted?	NO	Fully mitigated?	N/A

Level of Service Workheet
(Circular 212 Method)

I/S #:	North-South Street:	Glenoaks Boulevard	Year of Count:	2015	Ambient Growth: (%):	1.5	Conducted by:	City Traffic Counters	Date:	5/8/2015
CMA14	East-West Street:	Sheldon Street	Projection Year:	2018	Peak Hour:	PM	Reviewed by:		Project:	Pacoima Reservoir Project/1-13-4

No. of Phases				2				2				2				2				2			2
Opposed Ø'ing: N/S-1, E/W-2 or Both-3?				0				0				0				0				0			0
Right Turns: FREE-1, NRTOR-2 or OLA-3?	NB--	0	SB--	0	NB--	0	SB--	0	NB--	0	SB--	0	NB--	0	SB--	0	NB--	0	SB--	0	NB--	0	SB--	0
	EB--	0	WB--	0	EB--	0	WB--	0	EB--	0	WB--	0	EB--	0	WB--	0	EB--	0	WB--	0	EB--	0	WB--	0
ATSAC-1 or ATSAC+ATCS-2?				2				2				2				2				2				2
Override Capacity				0				0				0				0				0				0

MOVEMENT		EXISTING CONDITION			EXISTING PLUS PROJECT			FUTURE CONDITION W/O PROJECT				FUTURE CONDITION W/ PROJECT				FUTURE W/ PROJECT W/ MITIGATION			
		Volume	No. of Lanes	Lane Volume	Project Traffic	Total Volume	Lane Volume	Added Volume	Total Volume	No. of Lanes	Lane Volume	Added Volume	Total Volume	No. of Lanes	Lane Volume	Added Volume	Total Volume	No. of Lanes	Lane Volume
NORTHBOUND	Left	185	1	**185**	16	201	**201**	0	193	1	**193**	16	209	1	**209**	0	209	1	**209**
	Left-Through		0							0				0				0	
	Through	822	2	411	0	822	411	23	883	2	442	0	883	2	442	0	883	2	442
	Through-Right		0							0				0				0	
	Right	63	1	36	0	63	36	0	66	1	38	0	66	1	38	0	66	1	38
	Left-Through-Right		0							0				0				0	
	Left-Right		0							0				0				0	
SOUTHBOUND	Left	107	1	107	0	107	107	34	146	1	146	0	146	1	146	0	146	1	146
	Left-Through		0							0				0				0	
	Through	697	1	**436**	0	697	**436**	17	746	1	**465**	0	746	1	**465**	0	746	1	**465**
	Through-Right		1							1				1				1	
	Right	175	0	175	0	175	175	0	183	0	183	0	183	0	183	0	183	0	183
	Left-Through-Right		0							0				0				0	
	Left-Right		0							0				0				0	
EASTBOUND	Left	279	1	**279**	0	279	**279**	0	292	1	**292**	0	292	1	**292**	0	292	1	**292**
	Left-Through		0							0				0				0	
	Through	408	1	280	33	441	296	0	427	1	293	33	460	1	309	0	460	1	309
	Through-Right		1							1				1				1	
	Right	151	0	151	0	151	151	0	158	0	158	0	158	0	158	0	158	0	158
	Left-Through-Right		0							0				0				0	
	Left-Right		0							0				0				0	
WESTBOUND	Left	54	1	54	0	54	54	0	56	1	56	0	56	1	56	0	56	1	56
	Left-Through		0							0				0				0	
	Through	208	1	**139**	17	225	**147**	0	218	1	**162**	17	235	1	**171**	0	235	1	**171**
	Through-Right		1							1				1				1	
	Right	69	0	69	0	69	69	34	106	0	106	0	106	0	106	0	106	0	106
	Left-Through-Right		0							0				0				0	
	Left-Right		0							0				0				0	
CRITICAL VOLUMES		*North-South:*		621	*North-South:*		637	*North-South:*			658	*North-South:*			674	*North-South:*			674
		East-West:		418	*East-West:*		426	*East-West:*			454	*East-West:*			463	*East-West:*			463
		SUM:		1039	*SUM:*		1063	*SUM:*			1112	*SUM:*			1137	*SUM:*			1137
VOLUME/CAPACITY *(V/C)* RATIO:				0.693			0.709				0.741				0.758				0.758
V/C LESS ATSAC/ATCS ADJUSTMENT:				**0.593**			**0.609**				**0.641**				**0.658**				**0.658**
LEVEL OF SERVICE (LOS):				**A**			**B**				**B**				**B**				**B**

REMARKS: Alt. Route 1: Concurrent Use of All Three Disposal Sites

Version: 1i Beta; 8/4/2011

PROJECT IMPACT

Change in *v/c* due to project:	0.017	Δ*v/c* after mitigation:	0.017
Significant impacted?	NO	Fully mitigated?	N/A

Level of Service Workheet
(Circular 212 Method)

I/S #:	North-South Street:	Laurel Canyon Boulevard	Year of Count:	2015	Ambient Growth: (%):	1.5	Conducted by:	City Traffic Counters	Date:	4/24/2015
CMA15	East-West Street:	Paxton Street	Projection Year:	2018	Peak Hour:	AM	Reviewed by:		Project:	Pacoima Reservoir Project/1-13-4

No. of Phases				3				3				3				3				3		
Opposed Ø'ing: N/S-1, E/W-2 or Both-3?				0				0				0				0				0		
Right Turns: FREE-1, NRTOR-2 or OLA-3?	NB--	0	SB--	0	NB--	0	SB--	0	NB--	0	SB--	0	NB--	0	SB--	0	NB--	0	SB--	0		
	EB--	0	WB--	0	EB--	0	WB--	0	EB--	0	WB--	0	EB--	0	WB--	0	EB--	0	WB--	0		
ATSAC-1 or ATSAC+ATCS-2?				2				2				2				2				2		
Override Capacity				0				0				0				0				0		

	MOVEMENT	EXISTING CONDITION			EXISTING PLUS PROJECT			FUTURE CONDITION W/O PROJECT				FUTURE CONDITION W/ PROJECT				FUTURE W/ PROJECT W/ MITIGATION			
		Volume	No. of Lanes	Lane Volume	Project Traffic	Total Volume	Lane Volume	Added Volume	Total Volume	No. of Lanes	Lane Volume	Added Volume	Total Volume	No. of Lanes	Lane Volume	Added Volume	Total Volume	No. of Lanes	Lane Volume
NORTHBOUND	Left	63	1	**63**	0	63	**63**	6	72	1	**72**	0	72	1	**72**	0	72	1	**72**
	Left-Through		0							0				0				0	
	Through	949	1	542	0	949	542	14	1006	1	573	0	1006	1	573	0	1006	1	573
	Through-Right		1							1				1				1	
	Right	134	0	134	0	134	134	0	140	0	140	0	140	0	140	0	140	0	140
	Left-Through-Right		0							0				0				0	
	Left-Right		0							0				0				0	
SOUTHBOUND	Left	145	1	145	0	145	145	0	152	1	152	0	152	1	152	0	152	1	152
	Left-Through		0							0				0				0	
	Through	1292	1	**789**	0	1292	**789**	21	1372	1	**835**	0	1372	1	**835**	0	1372	1	**835**
	Through-Right		1							1				1				1	
	Right	285	0	285	0	285	285	0	298	0	298	0	298	0	298	0	298	0	298
	Left-Through-Right		0							0				0				0	
	Left-Right		0							0				0				0	
EASTBOUND	Left	79	1	79	0	79	79	0	83	1	83	0	83	1	83	0	83	1	83
	Left-Through		0							0				0				0	
	Through	588	1	**317**	20	608	**327**	1	616	1	**336**	20	636	1	**346**	0	636	1	**346**
	Through-Right		1							1				1				1	
	Right	45	0	45	0	45	45	8	55	0	55	0	55	0	55	0	55	0	55
	Left-Through-Right		0							0				0				0	
	Left-Right		0							0				0				0	
WESTBOUND	Left	97	1	**97**	0	97	**97**	0	101	1	**101**	0	101	1	**101**	0	101	1	**101**
	Left-Through		0							0				0				0	
	Through	410	1	308	20	430	318	1	430	1	323	20	450	1	333	0	450	1	333
	Through-Right		1							1				1				1	
	Right	206	0	206	0	206	206	0	215	0	215	0	215	0	215	0	215	0	215
	Left-Through-Right		0							0				0				0	
	Left-Right		0							0				0				0	
CRITICAL VOLUMES			*North-South:*	852		*North-South:*	852		*North-South:*	907			*North-South:*	907			*North-South:*	907	
			East-West:	414		*East-West:*	424		*East-West:*	437			*East-West:*	447			*East-West:*	447	
			SUM:	1266		*SUM:*	1276		*SUM:*	1344			*SUM:*	1354			*SUM:*	1354	
VOLUME/CAPACITY *(V/C)* RATIO:				0.888			0.895			0.943				0.950				0.950	
V/C LESS ATSAC/ATCS ADJUSTMENT:				**0.788**			**0.795**			**0.843**				**0.850**				**0.850**	
LEVEL OF SERVICE (LOS):				**C**			**C**			**D**				**D**				**D**	

REMARKS: Alt. Route 1: Concurrent Use of All Three Disposal Sites

Version: 1i Beta; 8/4/2011

PROJECT IMPACT

Change in *v/c* due to project:	0.007	Δ*v/c* after mitigation:	0.007
Significant impacted?	NO	Fully mitigated?	N/A

Level of Service Workheet
(Circular 212 Method)

I/S #:	North-South Street:	Laurel Canyon Boulevard	Year of Count:	2015	Ambient Growth: (%):	1.5	Conducted by:	City Traffic Counters	Date:	4/24/2015
CMA15	East-West Street:	Paxton Street	Projection Year:	2018	Peak Hour:	Mid-Day	Reviewed by:		Project:	Pacoima Reservoir Project/1-13-4

No. of Phases				3				3				3				3				3		
Opposed Ø'ing: N/S-1, E/W-2 or Both-3?				0				0				0				0				0		
Right Turns: FREE-1, NRTOR-2 or OLA-3?	NB--	0	SB--	0	NB--	0	SB--	0	NB--	0	SB--	0	NB--	0	SB--	0	NB--	0	SB--	0		
	EB--	0	WB--	0	EB--	0	WB--	0	EB--	0	WB--	0	EB--	0	WB--	0	EB--	0	WB--	0		
ATSAC-1 or ATSAC+ATCS-2?				2				2				2				2				2		
Override Capacity				0				0				0				0				0		

	MOVEMENT	EXISTING CONDITION			EXISTING PLUS PROJECT			FUTURE CONDITION W/O PROJECT				FUTURE CONDITION W/ PROJECT				FUTURE W/ PROJECT W/ MITIGATION			
		Volume	No. of Lanes	Lane Volume	Project Traffic	Total Volume	Lane Volume	Added Volume	Total Volume	No. of Lanes	Lane Volume	Added Volume	Total Volume	No. of Lanes	Lane Volume	Added Volume	Total Volume	No. of Lanes	Lane Volume
NORTHBOUND	Left	83	1	83	0	83	83	1	88	1	88	0	88	1	88	0	88	1	88
	Left-Through		0							0				0				0	
	Through	548	1	**331**	0	548	**331**	1	574	1	**346**	0	574	1	**346**	0	574	1	**346**
	Through-Right		1							1				1				1	
	Right	113	0	113	0	113	113	0	118	0	118	0	118	0	118	0	118	0	118
	Left-Through-Right		0							0				0				0	
	Left-Right		0							0				0				0	
SOUTHBOUND	Left	155	1	**155**	0	155	**155**	0	162	1	**162**	0	162	1	**162**	0	162	1	**162**
	Left-Through		0							0				0				0	
	Through	510	1	292	0	510	292	1	534	1	305	0	534	1	305	0	534	1	305
	Through-Right		1							1				1				1	
	Right	73	0	73	0	73	73	0	76	0	76	0	76	0	76	0	76	0	76
	Left-Through-Right		0							0				0				0	
	Left-Right		0							0				0				0	
EASTBOUND	Left	114	1	**114**	0	114	**114**	0	119	1	**119**	0	119	1	**119**	0	119	1	**119**
	Left-Through		0							0				0				0	
	Through	307	1	170	20	327	180	1	322	1	179	20	342	1	189	0	342	1	189
	Through-Right		1							1				1				1	
	Right	33	0	33	0	33	33	1	36	0	36	0	36	0	36	0	36	0	36
	Left-Through-Right		0							0				0				0	
	Left-Right		0							0				0				0	
WESTBOUND	Left	78	1	78	0	78	78	0	82	1	82	0	82	1	82	0	82	1	82
	Left-Through		0							0				0				0	
	Through	240	1	**178**	20	260	**188**	1	252	1	**187**	20	272	1	**197**	0	272	1	**197**
	Through-Right		1							1				1				1	
	Right	116	0	116	0	116	116	0	121	0	121	0	121	0	121	0	121	0	121
	Left-Through-Right		0							0				0				0	
	Left-Right		0							0				0				0	
CRITICAL VOLUMES			*North-South:*	486		*North-South:*	486		*North-South:*	508			*North-South:*	508			*North-South:*	508	
			East-West:	292		*East-West:*	302		*East-West:*	306			*East-West:*	316			*East-West:*	316	
			SUM:	778		*SUM:*	788		*SUM:*	814			*SUM:*	824			*SUM:*	824	
VOLUME/CAPACITY *(V/C)* RATIO:				0.546			0.553				0.571				0.578				0.578
V/C LESS ATSAC/ATCS ADJUSTMENT:				**0.446**			**0.453**				**0.471**				**0.478**				**0.478**
LEVEL OF SERVICE (LOS):				**A**			**A**				**A**				**A**				**A**

REMARKS: Alt. Route 1: Concurrent Use of All Three Disposal Sites

Version: 1i Beta; 8/4/2011

PROJECT IMPACT

Change in *v/c* due to project:	0.007	Δ*v/c* after mitigation:	0.007
Significant impacted?	NO	Fully mitigated?	N/A

Level of Service Workheet
(Circular 212 Method)

I/S #:	North-South Street:	Laurel Canyon Boulevard	Year of Count:	2015	Ambient Growth: (%):	1.5	Conducted by:	City Traffic Counters	Date:	4/24/2015
CMA15	East-West Street:	Paxton Street	Projection Year:	2018	Peak Hour:	PM	Reviewed by:		Project:	Pacoima Reservoir Project/1-13-4

No. of Phases				3				3				3				3				3			3
Opposed Ø'ing: N/S-1, E/W-2 or Both-3?				0				0				0				0				0			0
Right Turns: FREE-1, NRTOR-2 or OLA-3?	NB--	0	SB--	0	NB--	0	SB--	0	NB--	0	SB--	0	NB--	0	SB--	0	NB--	0	SB--	0	NB--	0	SB--	0
	EB--	0	WB--	0	EB--	0	WB--	0	EB--	0	WB--	0	EB--	0	WB--	0	EB--	0	WB--	0	EB--	0	WB--	0
ATSAC-1 or ATSAC+ATCS-2?				2				2				2				2				2			2
Override Capacity				0				0				0				0				0			0

	MOVEMENT	EXISTING CONDITION			EXISTING PLUS PROJECT			FUTURE CONDITION W/O PROJECT				FUTURE CONDITION W/ PROJECT				FUTURE W/ PROJECT W/ MITIGATION			
		Volume	No. of Lanes	Lane Volume	Project Traffic	Total Volume	Lane Volume	Added Volume	Total Volume	No. of Lanes	Lane Volume	Added Volume	Total Volume	No. of Lanes	Lane Volume	Added Volume	Total Volume	No. of Lanes	Lane Volume
NORTHBOUND	Left	160	1	160	0	160	160	5	172	1	172	0	172	1	172	0	172	1	172
	Left-Through		0							0				0				0	
	Through	1224	1	**693**	0	1224	**693**	11	1291	1	**730**	0	1291	1	**730**	0	1291	1	**730**
	Through-Right		1							1				1				1	
	Right	162	0	162	0	162	162	0	169	0	169	0	169	0	169	0	169	0	169
	Left-Through-Right		0							0				0				0	
	Left-Right		0							0				0				0	
SOUTHBOUND	Left	193	1	**193**	0	193	**193**	0	202	1	**202**	0	202	1	**202**	0	202	1	**202**
	Left-Through		0							0				0				0	
	Through	1050	1	643	0	1050	643	8	1106	1	677	0	1106	1	677	0	1106	1	677
	Through-Right		1							1				1				1	
	Right	236	0	236	0	236	236	0	247	0	247	0	247	0	247	0	247	0	247
	Left-Through-Right		0							0				0				0	
	Left-Right		0							0				0				0	
EASTBOUND	Left	89	1	89	0	89	89	0	93	1	93	0	93	1	93	0	93	1	93
	Left-Through		0							0				0				0	
	Through	682	1	**399**	20	702	**409**	1	714	1	**420**	20	734	1	**430**	0	734	1	**430**
	Through-Right		1							1				1				1	
	Right	116	0	116	0	116	116	4	125	0	125	0	125	0	125	0	125	0	125
	Left-Through-Right		0							0				0				0	
	Left-Right		0							0				0				0	
WESTBOUND	Left	101	1	**101**	0	101	**101**	0	106	1	**106**	0	106	1	**106**	0	106	1	**106**
	Left-Through		0							0				0				0	
	Through	550	1	327	20	570	337	1	576	1	342	20	596	1	352	0	596	1	352
	Through-Right		1							1				1				1	
	Right	103	0	103	0	103	103	0	108	0	108	0	108	0	108	0	108	0	108
	Left-Through-Right		0							0				0				0	
	Left-Right		0							0				0				0	
CRITICAL VOLUMES		North-South:		886	North-South:		886	North-South:			932	North-South:			932	North-South:			932
		East-West:		500	East-West:		510	East-West:			526	East-West:			536	East-West:			536
		SUM:		1386	SUM:		1396	SUM:			1458	SUM:			1468	SUM:			1468
VOLUME/CAPACITY (V/C) RATIO:				0.973			0.980				1.023				1.030				1.030
V/C LESS ATSAC/ATCS ADJUSTMENT:				**0.873**			**0.880**				**0.923**				**0.930**				**0.930**
LEVEL OF SERVICE (LOS):				**D**			**D**				**E**				**E**				**E**

REMARKS: Alt. Route 1: Concurrent Use of All Three Disposal Sites

Version: 1i Beta; 8/4/2011

PROJECT IMPACT

Change in *v/c* due to project:	0.007	Δ*v/c* after mitigation:	0.007
Significant impacted?	NO	Fully mitigated?	N/A

Level of Service Workheet
(Circular 212 Method)

I/S #:	North-South Street:	Haddon Street	Year of Count:	2015	Ambient Growth: (%):	1.5	Conducted by:	City Traffic Counters	Date:	4/24/2015
CMA16	East-West Street:	Paxton Street	Projection Year:	2018	Peak Hour:	AM	Reviewed by:		Project:	Pacoima Reservoir Project/1-13-4

No. of Phases				0				0				0				0				0			
Opposed Ø'ing: N/S-1, E/W-2 or Both-3?				0				0				0				0				0			
Right Turns: FREE-1, NRTOR-2 or OLA-3?	NB--	0	SB--	0	NB--	0	SB--	0	NB--	0	SB--	0	NB--	0	SB--	0	NB--	0	SB--	0			
	EB--	0	WB--	0	EB--	0	WB--	0	EB--	0	WB--	0	EB--	0	WB--	0	EB--	0	WB--	0			
ATSAC-1 or ATSAC+ATCS-2?				0				0				0				0				0			
Override Capacity				1200				#####				1200				1200				1200			

	MOVEMENT	EXISTING CONDITION			EXISTING PLUS PROJECT			FUTURE CONDITION W/O PROJECT				FUTURE CONDITION W/ PROJECT				FUTURE W/ PROJECT W/ MITIGATION			
		Volume	No. of Lanes	Lane Volume	Project Traffic	Total Volume	Lane Volume	Added Volume	Total Volume	No. of Lanes	Lane Volume	Added Volume	Total Volume	No. of Lanes	Lane Volume	Added Volume	Total Volume	No. of Lanes	Lane Volume
NORTHBOUND	Left	24	0	24	0	24	24	0	25	0	25	0	25	0	25	0	25	0	25
	Left-Through		0							0				0				0	
	Through	0	0	**108**	0	0	**108**	0	0	0	**113**	0	0	0	**113**	0	0	0	**113**
	Through-Right		0							0				0				0	
	Right	84	0	0	0	84	0	0	88	0	0	0	88	0	0	0	88	0	0
	Left-Through-Right		1							1				1				1	
	Left-Right		0							0				0				0	
SOUTHBOUND	Left	1	0	**1**	0	1	**1**	0	1	0	**1**	0	1	0	**1**	0	1	0	**1**
	Left-Through		0							0				0				0	
	Through	0	0	9	0	0	9	0	0	0	9	0	0	0	9	0	0	0	9
	Through-Right		0							0				0				0	
	Right	8	0	0	0	8	0	0	8	0	0	0	8	0	0	0	8	0	0
	Left-Through-Right		1							1				1				1	
	Left-Right		0							0				0				0	
EASTBOUND	Left	9	1	9	0	9	9	0	9	1	9	0	9	1	9	0	9	1	9
	Left-Through		0							0				0				0	
	Through	807	1	**416**	20	827	**426**	1	845	1	**436**	20	865	1	**446**	0	865	1	**446**
	Through-Right		1							1				1				1	
	Right	25	0	25	0	25	25	0	26	0	26	0	26	0	26	0	26	0	26
	Left-Through-Right		0							0				0				0	
	Left-Right		0							0				0				0	
WESTBOUND	Left	73	1	**73**	0	73	**73**	0	76	1	**76**	0	76	1	**76**	0	76	1	**76**
	Left-Through		0							0				0				0	
	Through	766	1	386	20	786	396	1	802	1	404	20	822	1	414	0	822	1	414
	Through-Right		1							1				1				1	
	Right	5	0	5	0	5	5	0	5	0	5	0	5	0	5	0	5	0	5
	Left-Through-Right		0							0				0				0	
	Left-Right		0							0				0				0	
CRITICAL VOLUMES		North-South:		109	North-South:		109	North-South:			114	North-South:			114	North-South:			114
		East-West:		489	East-West:		499	East-West:			512	East-West:			522	East-West:			522
		SUM:		598	SUM:		608	SUM:			626	SUM:			636	SUM:			636
VOLUME/CAPACITY (V/C) RATIO:				0.498			0.507				0.522				0.530				0.530
V/C LESS ATSAC/ATCS ADJUSTMENT:				0.498			0.507				0.522				0.530				0.530
LEVEL OF SERVICE (LOS):				A			A				A				A				A

REMARKS: Alt. Route 1: Concurrent Use of All Three Disposal Sites

Version: 1i Beta; 8/4/2011

PROJECT IMPACT

Change in *v/c* due to project:	0.008	Δ*v/c* after mitigation:	0.008
Significant impacted?	NO	Fully mitigated?	N/A

Level of Service Workheet
(Circular 212 Method)

I/S #:	North-South Street:	Haddon Street	Year of Count:	2015	Ambient Growth: (%):	1.5	Conducted by:	City Traffic Counters	Date:	4/24/2015
CMA16	East-West Street:	Paxton Street	Projection Year:	2018	Peak Hour:	Mid-Day	Reviewed by:		Project:	Pacoima Reservoir Project/1-13-4

	Existing Condition	Existing Plus Project	Future Condition W/O Project	Future Condition W/ Project	Future W/ Project W/ Mitigation
No. of Phases	0	0	0	0	0
Opposed Ø'ing: N/S-1, E/W-2 or Both-3?	0	0	0	0	0
Right Turns: FREE-1, NRTOR-2 or OLA-3?	NB-- 0 SB-- 0 EB-- 0 WB-- 0	NB-- 0 SB-- 0 EB-- 0 WB-- 0	NB-- 0 SB-- 0 EB-- 0 WB-- 0	NB-- 0 SB-- 0 EB-- 0 WB-- 0	NB-- 0 SB-- 0 EB-- 0 WB-- 0
ATSAC-1 or ATSAC+ATCS-2?	0	0	0	0	0
Override Capacity	1200	#####	1200	1200	1200

MOVEMENT		Existing Condition Volume	No. of Lanes	Lane Volume	Existing Plus Project Project Traffic	Total Volume	Lane Volume	Future Condition W/O Project Added Volume	Total Volume	No. of Lanes	Lane Volume	Future Condition W/ Project Added Volume	Total Volume	No. of Lanes	Lane Volume	Future W/ Project W/ Mitigation Added Volume	Total Volume	No. of Lanes	Lane Volume
NORTHBOUND	Left	8	0	8	0	8	8	0	8	0	8	0	8	0	8	0	8	0	8
	Left-Through		0							0				0				0	
	Through	3	0	**39**	0	3	**39**	0	3	0	**40**	0	3	0	**40**	0	3	0	**40**
	Through-Right		0							0				0				0	
	Right	28	0	0	0	28	0	0	29	0	0	0	29	0	0	0	29	0	0
	Left-Through-Right		1							1				1				1	
	Left-Right		0							0				0				0	
SOUTHBOUND	Left	2	0	**2**	0	2	**2**	0	2	0	**2**	0	2	0	**2**	0	2	0	**2**
	Left-Through		0							0				0				0	
	Through	0	0	9	0	0	9	0	0	0	9	0	0	0	9	0	0	0	9
	Through-Right		0							0				0				0	
	Right	7	0	0	0	7	0	0	7	0	0	0	7	0	0	0	7	0	0
	Left-Through-Right		1							1				1				1	
	Left-Right		0							0				0				0	
EASTBOUND	Left	6	1	6	0	6	6	0	6	1	6	0	6	1	6	0	6	1	6
	Left-Through		0							0				0				0	
	Through	483	1	**250**	20	503	**260**	1	506	1	**262**	20	526	1	**272**	0	526	1	**272**
	Through-Right		1							1				1				1	
	Right	17	0	17	0	17	17	0	18	0	18	0	18	0	18	0	18	0	18
	Left-Through-Right		0							0				0				0	
	Left-Right		0							0				0				0	
WESTBOUND	Left	49	1	**49**	0	49	**49**	0	51	1	**51**	0	51	1	**51**	0	51	1	**51**
	Left-Through		0							0				0				0	
	Through	526	1	264	20	546	274	1	551	1	277	20	571	1	287	0	571	1	287
	Through-Right		1							1				1				1	
	Right	2	0	2	0	2	2	0	2	0	2	0	2	0	2	0	2	0	2
	Left-Through-Right		0							0				0				0	
	Left-Right		0							0				0				0	
CRITICAL VOLUMES		North-South:		41	North-South:		41	North-South:			42	North-South:			42	North-South:			42
		East-West:		299	East-West:		309	East-West:			313	East-West:			323	East-West:			323
		SUM:		340	SUM:		350	SUM:			355	SUM:			365	SUM:			365
VOLUME/CAPACITY (V/C) RATIO:				0.283			0.292				0.296				0.304				0.304
V/C LESS ATSAC/ATCS ADJUSTMENT:				0.283			0.292				0.296				0.304				0.304
LEVEL OF SERVICE (LOS):				A			A				A				A				A

REMARKS: Alt. Route 1: Concurrent Use of All Three Disposal Sites

Version: 1i Beta; 8/4/2011

PROJECT IMPACT

Change in *v/c* due to project:	0.008	Δ*v/c* after mitigation:	0.008
Significant impacted?	NO	Fully mitigated?	N/A

Level of Service Workheet
(Circular 212 Method)

I/S #:	North-South Street:	Haddon Street	Year of Count:	2015	Ambient Growth: (%):	1.5	Conducted by:	City Traffic Counters	Date:	4/24/2015
CMA16	East-West Street:	Paxton Street	Projection Year:	2018	Peak Hour:	PM	Reviewed by:		Project:	Pacoima Reservoir Project/1-13-4

No. of Phases				0				0				0				0				0			
Opposed Ø'ing: N/S-1, E/W-2 or Both-3?				0				0				0				0				0			
Right Turns: FREE-1, NRTOR-2 or OLA-3?	NB--	0	SB--	0	NB--	0	SB--	0	NB--	0	SB--	0	NB--	0	SB--	0	NB--	0	SB--	0			
	EB--	0	WB--	0	EB--	0	WB--	0	EB--	0	WB--	0	EB--	0	WB--	0	EB--	0	WB--	0			
ATSAC-1 or ATSAC+ATCS-2?				0				0				0				0				0			
Override Capacity				1200				#####				1200				1200				1200			

MOVEMENT		EXISTING CONDITION			EXISTING PLUS PROJECT			FUTURE CONDITION W/O PROJECT				FUTURE CONDITION W/ PROJECT				FUTURE W/ PROJECT W/ MITIGATION			
		Volume	No. of Lanes	Lane Volume	Project Traffic	Total Volume	Lane Volume	Added Volume	Total Volume	No. of Lanes	Lane Volume	Added Volume	Total Volume	No. of Lanes	Lane Volume	Added Volume	Total Volume	No. of Lanes	Lane Volume
NORTHBOUND	Left	10	0	10	0	10	10	0	10	0	10	0	10	0	10	0	10	0	10
	Left-Through		0							0				0				0	
	Through	1	0	**82**	0	1	**82**	0	1	0	**85**	0	1	0	**85**	0	1	0	**85**
	Through-Right		0							0				0				0	
	Right	71	0	0	0	71	0	0	74	0	0	0	74	0	0	0	74	0	0
	Left-Through-Right		1							1				1				1	
	Left-Right		0							0				0				0	
SOUTHBOUND	Left	5	0	**5**	0	5	**5**	0	5	0	**5**	0	5	0	**5**	0	5	0	**5**
	Left-Through		0							0				0				0	
	Through	0	0	10	0	0	10	0	0	0	10	0	0	0	10	0	0	0	10
	Through-Right		0							0				0				0	
	Right	5	0	0	0	5	0	0	5	0	0	0	5	0	0	0	5	0	0
	Left-Through-Right		1							1				1				1	
	Left-Right		0							0				0				0	
EASTBOUND	Left	18	1	18	0	18	18	0	19	1	19	0	19	1	19	0	19	1	19
	Left-Through		0							0				0				0	
	Through	1002	1	**518**	20	1022	**528**	1	1049	1	**543**	20	1069	1	**553**	0	1069	1	**553**
	Through-Right		1							1				1				1	
	Right	34	0	34	0	34	34	0	36	0	36	0	36	0	36	0	36	0	36
	Left-Through-Right		0							0				0				0	
	Left-Right		0							0				0				0	
WESTBOUND	Left	70	1	**70**	0	70	**70**	0	73	1	**73**	0	73	1	**73**	0	73	1	**73**
	Left-Through		0							0				0				0	
	Through	681	1	344	20	701	354	1	713	1	360	20	733	1	370	0	733	1	370
	Through-Right		1							1				1				1	
	Right	7	0	7	0	7	7	0	7	0	7	0	7	0	7	0	7	0	7
	Left-Through-Right		0							0				0				0	
	Left-Right		0							0				0				0	
CRITICAL VOLUMES			*North-South:*	87		*North-South:*	87			*North-South:*	90			*North-South:*	90			*North-South:*	90
			East-West:	588		*East-West:*	598			*East-West:*	616			*East-West:*	626			*East-West:*	626
			SUM:	675		*SUM:*	685			*SUM:*	706			*SUM:*	716			*SUM:*	716
VOLUME/CAPACITY *(V/C)* RATIO:				0.563			0.571				0.588				0.597				0.597
V/C LESS ATSAC/ATCS ADJUSTMENT:				0.563			0.571				0.588				0.597				0.597
LEVEL OF SERVICE (LOS):				A			A				A				A				A

REMARKS: Alt. Route 1: Concurrent Use of All Three Disposal Sites

Version: 1i Beta; 8/4/2011

PROJECT IMPACT

Change in *v/c* due to project:	0.009	Δ*v/c* after mitigation:	0.009
Significant impacted?	NO	Fully mitigated?	N/A

Level of Service Workheet
(Circular 212 Method)

I/S #:	North-South Street:	Kewen Avenue	Year of Count:	2015	Ambient Growth: (%):	1.5	Conducted by:	City Traffic Counters	Date:	4/24/2015
CMA17	East-West Street:	Paxton Street	Projection Year:	2018	Peak Hour:	AM	Reviewed by:		Project:	Pacoima Reservoir Project/1-13-4

	Existing Condition	Existing Plus Project	Future Condition W/O Project	Future Condition W/ Project	Future W/ Project W/ Mitigation
No. of Phases	0	0	0	0	0
Opposed Ø'ing: N/S-1, E/W-2 or Both-3?	0	0	0	0	0
Right Turns: FREE-1, NRTOR-2 or OLA-3?	NB-- 0 SB-- 0	NB-- 0 SB-- 0	NB-- 0 SB-- 0	NB-- 0 SB-- 0	NB-- 0 SB-- 0
	EB-- 0 WB-- 0	EB-- 0 WB-- 0	EB-- 0 WB-- 0	EB-- 0 WB-- 0	EB-- 0 WB-- 0
ATSAC-1 or ATSAC+ATCS-2?	0	0	0	0	0
Override Capacity	1200	#####	1200	1200	1200

	MOVEMENT	Existing Condition Volume	No. of Lanes	Lane Volume	Existing Plus Project Project Traffic	Total Volume	Lane Volume	Future Condition W/O Project Added Volume	Total Volume	No. of Lanes	Lane Volume	Future Condition W/ Project Added Volume	Total Volume	No. of Lanes	Lane Volume	Future W/ Project W/ Mitigation Added Volume	Total Volume	No. of Lanes	Lane Volume
NORTHBOUND	Left	36	0	36	0	36	36	0	38	0	38	0	38	0	38	0	38	0	38
	Left-Through		0							0				0				0	
	Through	0	0	0	0	0	0	0	0	0	0	0	0	0	0	0	0	0	0
	Through-Right		0							0				0				0	
	Right	86	0	**122**	0	86	**122**	0	90	0	**128**	0	90	0	**128**	0	90	0	**128**
	Left-Through-Right		0							0				0				0	
	Left-Right		1							1				1				1	
SOUTHBOUND	Left	0	0	**0**	0	0	**0**	0	0	0	**0**	0	0	0	**0**	0	0	0	**0**
	Left-Through		0							0				0				0	
	Through	0	0	0	0	0	0	0	0	0	0	0	0	0	0	0	0	0	0
	Through-Right		0							0				0				0	
	Right	0	0	0	0	0	0	0	0	0	0	0	0	0	0	0	0	0	0
	Left-Through-Right		0							0				0				0	
	Left-Right		0							0				0				0	
EASTBOUND	Left	0	0	0	0	0	0	0	0	0	0	0	0	0	0	0	0	0	0
	Left-Through		0							0				0				0	
	Through	833	1	**444**	20	853	**454**	1	872	1	**464**	20	892	1	**474**	0	892	1	**474**
	Through-Right		1							1				1				1	
	Right	54	0	54	0	54	54	0	56	0	56	0	56	0	56	0	56	0	56
	Left-Through-Right		0							0				0				0	
	Left-Right		0							0				0				0	
WESTBOUND	Left	52	1	**52**	0	52	**52**	0	54	1	**54**	0	54	1	**54**	0	54	1	**54**
	Left-Through		0							0				0				0	
	Through	785	2	393	20	805	403	1	822	2	411	20	842	2	421	0	842	2	421
	Through-Right		0							0				0				0	
	Right	0	0	0	0	0	0	0	0	0	0	0	0	0	0	0	0	0	0
	Left-Through-Right		0							0				0				0	
	Left-Right		0							0				0				0	
CRITICAL VOLUMES		North-South:		122	North-South:		122	North-South:			128	North-South:			128	North-South:			128
		East-West:		496	East-West:		506	East-West:			518	East-West:			528	East-West:			528
		SUM:		618	SUM:		628	SUM:			646	SUM:			656	SUM:			656
VOLUME/CAPACITY (V/C) RATIO:				0.515			0.523				0.538				0.547				0.547
V/C LESS ATSAC/ATCS ADJUSTMENT:				0.515			0.523				0.538				0.547				0.547
LEVEL OF SERVICE (LOS):				A			A				A				A				A

REMARKS: Alt. Route 1: Concurrent Use of All Three Disposal Sites

Version: 1i Beta; 8/4/2011

PROJECT IMPACT

Change in *v/c* due to project:	0.009	Δ*v/c* after mitigation:	0.009
Significant impacted?	NO	Fully mitigated?	N/A

Level of Service Workheet
(Circular 212 Method)

I/S #:	North-South Street:	Kewen Avenue	Year of Count:	2015	Ambient Growth: (%):	1.5	Conducted by:	City Traffic Counters	Date:	4/24/2015
CMA17	East-West Street:	Paxton Street	Projection Year:	2018	Peak Hour:	Mid-Day	Reviewed by:		Project:	Pacoima Reservoir Project/1-13-4

	Existing Condition	Existing Plus Project	Future Condition W/O Project	Future Condition W/ Project	Future W/ Project W/ Mitigation
No. of Phases	0	0	0	0	0
Opposed Ø'ing: N/S-1, E/W-2 or Both-3?	0	0	0	0	0
Right Turns: FREE-1, NRTOR-2 or OLA-3?	NB-- 0 SB-- 0	NB-- 0 SB-- 0	NB-- 0 SB-- 0	NB-- 0 SB-- 0	NB-- 0 SB-- 0
	EB-- 0 WB-- 0	EB-- 0 WB-- 0	EB-- 0 WB-- 0	EB-- 0 WB-- 0	EB-- 0 WB-- 0
ATSAC-1 or ATSAC+ATCS-2?	0	0	0	0	0
Override Capacity	1200	#####	1200	1200	1200

	MOVEMENT	Existing Condition Volume	No. of Lanes	Lane Volume	Existing Plus Project Project Traffic	Total Volume	Lane Volume	Future Condition W/O Project Added Volume	Total Volume	No. of Lanes	Lane Volume	Future Condition W/ Project Added Volume	Total Volume	No. of Lanes	Lane Volume	Future W/ Project W/ Mitigation Added Volume	Total Volume	No. of Lanes	Lane Volume
NORTHBOUND	Left	8	0	8	0	8	8	0	8	0	8	0	8	0	8	0	8	0	8
	Left-Through		0							0				0				0	
	Through	0	0	0	0	0	0	0	0	0	0	0	0	0	0	0	0	0	0
	Through-Right		0							0				0				0	
	Right	26	0	**34**	0	26	**34**	0	27	0	**35**	0	27	0	**35**	0	27	0	**35**
	Left-Through-Right		0							0				0				0	
	Left-Right		1							1				1				1	
SOUTHBOUND	Left	0	0	**0**	0	0	**0**	0	0	0	**0**	0	0	0	**0**	0	0	0	**0**
	Left-Through		0							0				0				0	
	Through	0	0	0	0	0	0	0	0	0	0	0	0	0	0	0	0	0	0
	Through-Right		0							0				0				0	
	Right	0	0	0	0	0	0	0	0	0	0	0	0	0	0	0	0	0	0
	Left-Through-Right		0							0				0				0	
	Left-Right		0							0				0				0	
EASTBOUND	Left	0	0	0	0	0	0	0	0	0	0	0	0	0	0	0	0	0	0
	Left-Through		0							0				0				0	
	Through	523	1	**272**	20	543	**282**	1	548	1	**285**	20	568	1	**295**	0	568	1	**295**
	Through-Right		1							1				1				1	
	Right	20	0	20	0	20	20	0	21	0	21	0	21	0	21	0	21	0	21
	Left-Through-Right		0							0				0				0	
	Left-Right		0							0				0				0	
WESTBOUND	Left	25	1	**25**	0	25	**25**	0	26	1	**26**	0	26	1	**26**	0	26	1	**26**
	Left-Through		0							0				0				0	
	Through	522	2	261	20	542	271	1	547	2	274	20	567	2	284	0	567	2	284
	Through-Right		0							0				0				0	
	Right	0	0	0	0	0	0	0	0	0	0	0	0	0	0	0	0	0	0
	Left-Through-Right		0							0				0				0	
	Left-Right		0							0				0				0	
CRITICAL VOLUMES		North-South:		34	North-South:		34	North-South:			35	North-South:			35	North-South:			35
		East-West:		297	East-West:		307	East-West:			311	East-West:			321	East-West:			321
		SUM:		331	SUM:		341	SUM:			346	SUM:			356	SUM:			356
VOLUME/CAPACITY (V/C) RATIO:				0.276			0.284				0.288				0.297				0.297
V/C LESS ATSAC/ATCS ADJUSTMENT:				0.276			0.284				0.288				0.297				0.297
LEVEL OF SERVICE (LOS):				A			A				A				A				A

REMARKS: Alt. Route 1: Concurrent Use of All Three Disposal Sites

Version: 1i Beta; 8/4/2011

PROJECT IMPACT

Change in *v/c* due to project:	0.009	Δ*v/c* after mitigation:	0.009
Significant impacted?	NO	Fully mitigated?	N/A

Level of Service Workheet
(Circular 212 Method)

I/S #:	North-South Street:	Kewen Avenue	Year of Count:	2015	Ambient Growth: (%):	1.5	Conducted by:	City Traffic Counters	Date:	4/24/2015
CMA17	East-West Street:	Paxton Street	Projection Year:	2018	Peak Hour:	PM	Reviewed by:		Project:	Pacoima Reservoir Project/1-13-4

	Existing Condition	Existing Plus Project	Future Condition W/O Project	Future Condition W/ Project	Future W/ Project W/ Mitigation
No. of Phases	0	0	0	0	0
Opposed Ø'ing: N/S-1, E/W-2 or Both-3?	0	0	0	0	0
Right Turns: FREE-1, NRTOR-2 or OLA-3?	NB-- 0 SB-- 0 EB-- 0 WB-- 0	NB-- 0 SB-- 0 EB-- 0 WB-- 0	NB-- 0 SB-- 0 EB-- 0 WB-- 0	NB-- 0 SB-- 0 EB-- 0 WB-- 0	NB-- 0 SB-- 0 EB-- 0 WB-- 0
ATSAC-1 or ATSAC+ATCS-2?	0	0	0	0	0
Override Capacity	1200	#####	1200	1200	1200

	MOVEMENT	Existing Condition Volume	No. of Lanes	Lane Volume	Existing Plus Project Project Traffic	Total Volume	Lane Volume	Future Condition W/O Project Added Volume	Total Volume	No. of Lanes	Lane Volume	Future Condition W/ Project Added Volume	Total Volume	No. of Lanes	Lane Volume	Future W/ Project W/ Mitigation Added Volume	Total Volume	No. of Lanes	Lane Volume
NORTHBOUND	Left	18	0	18	0	18	18	0	19	0	19	0	19	0	19	0	19	0	19
	Left-Through		0							0				0				0	
	Through	0	0	0	0	0	0	0	0	0	0	0	0	0	0	0	0	0	0
	Through-Right		0							0				0				0	
	Right	56	0	**74**	0	56	**74**	0	59	0	**78**	0	59	0	**78**	0	59	0	**78**
	Left-Through-Right		0							0				0				0	
	Left-Right		1							1				1				1	
SOUTHBOUND	Left	0	0	**0**	0	0	**0**	0	0	0	**0**	0	0	0	**0**	0	0	0	**0**
	Left-Through		0							0				0				0	
	Through	0	0	0	0	0	0	0	0	0	0	0	0	0	0	0	0	0	0
	Through-Right		0							0				0				0	
	Right	0	0	0	0	0	0	0	0	0	0	0	0	0	0	0	0	0	0
	Left-Through-Right		0							0				0				0	
	Left-Right		0							0				0				0	
EASTBOUND	Left	0	0	0	0	0	0	0	0	0	0	0	0	0	0	0	0	0	0
	Left-Through		0							0				0				0	
	Through	1027	1	**531**	20	1047	**541**	1	1075	1	**556**	20	1095	1	**566**	0	1095	1	**566**
	Through-Right		1							1				1				1	
	Right	35	0	35	0	35	35	0	37	0	37	0	37	0	37	0	37	0	37
	Left-Through-Right		0							0				0				0	
	Left-Right		0							0				0				0	
WESTBOUND	Left	26	1	**26**	0	26	**26**	0	27	1	**27**	0	27	1	**27**	0	27	1	**27**
	Left-Through		0							0				0				0	
	Through	748	2	374	20	768	384	1	783	2	392	20	803	2	402	0	803	2	402
	Through-Right		0							0				0				0	
	Right	0	0	0	0	0	0	0	0	0	0	0	0	0	0	0	0	0	0
	Left-Through-Right		0							0				0				0	
	Left-Right		0							0				0				0	
CRITICAL VOLUMES		North-South:		74	North-South:		74	North-South:			78	North-South:			78	North-South:			78
		East-West:		557	East-West:		567	East-West:			583	East-West:			593	East-West:			593
		SUM:		631	SUM:		641	SUM:			661	SUM:			671	SUM:			671
VOLUME/CAPACITY (V/C) RATIO:				0.526			0.534				0.551				0.559				0.559
V/C LESS ATSAC/ATCS ADJUSTMENT:				0.526			0.534				0.551				0.559				0.559
LEVEL OF SERVICE (LOS):				A			A				A				A				A

REMARKS: Alt. Route 1: Concurrent Use of All Three Disposal Sites

Version: 1i Beta; 8/4/2011

PROJECT IMPACT

Change in *v/c* due to project:	0.008	Δ*v/c* after mitigation:	0.008
Significant impacted?	NO	Fully mitigated?	N/A

Level of Service Workheet
(Circular 212 Method)

I/S #:	North-South Street:	Telfair Avenue	Year of Count:	2015	Ambient Growth: (%):	1.5	Conducted by:	City Traffic Counters	Date:	4/24/2015
CMA18	East-West Street:	Paxton Street	Projection Year:	2018	Peak Hour:	AM	Reviewed by:		Project:	Pacoima Reservoir Project/1-13-4

No. of Phases				2				2				2				2				2			
Opposed Ø'ing: N/S-1, E/W-2 or Both-3?				0				0				0				0				0			
Right Turns: FREE-1, NRTOR-2 or OLA-3?	NB--	0	SB--	0	NB--	0	SB--	0	NB--	0	SB--	0	NB--	0	SB--	0	NB--	0	SB--	0			
	EB--	0	WB--	0	EB--	0	WB--	0	EB--	0	WB--	0	EB--	0	WB--	0	EB--	0	WB--	0			
ATSAC-1 or ATSAC+ATCS-2?				2				2				2				2				2			
Override Capacity				0				0				0				0				0			

	MOVEMENT	EXISTING CONDITION			EXISTING PLUS PROJECT			FUTURE CONDITION W/O PROJECT				FUTURE CONDITION W/ PROJECT				FUTURE W/ PROJECT W/ MITIGATION			
		Volume	No. of Lanes	Lane Volume	Project Traffic	Total Volume	Lane Volume	Added Volume	Total Volume	No. of Lanes	Lane Volume	Added Volume	Total Volume	No. of Lanes	Lane Volume	Added Volume	Total Volume	No. of Lanes	Lane Volume
NORTHBOUND	Left	57	0	**57**	0	57	**57**	0	60	0	**60**	0	60	0	**60**	0	60	0	**60**
	Left-Through		0							0				0				0	
	Through	57	0	158	0	57	158	0	60	0	166	0	60	0	166	0	60	0	166
	Through-Right		0							0				0				0	
	Right	44	0	0	0	44	0	0	46	0	0	0	46	0	0	0	46	0	0
	Left-Through-Right		1							1				1				1	
	Left-Right		0							0				0				0	
SOUTHBOUND	Left	51	0	51	0	51	51	0	53	0	53	0	53	0	53	0	53	0	53
	Left-Through		0							0				0				0	
	Through	38	0	**185**	0	38	**185**	0	40	0	**193**	0	40	0	**193**	0	40	0	**193**
	Through-Right		0							0				0				0	
	Right	96	0	0	0	96	0	0	100	0	0	0	100	0	0	0	100	0	0
	Left-Through-Right		1							1				1				1	
	Left-Right		0							0				0				0	
EASTBOUND	Left	98	1	98	0	98	98	0	102	1	102	0	102	1	102	0	102	1	102
	Left-Through		0							0				0				0	
	Through	752	1	**419**	20	772	**429**	1	787	1	**439**	20	807	1	**449**	0	807	1	**449**
	Through-Right		1							1				1				1	
	Right	86	0	86	0	86	86	0	90	0	90	0	90	0	90	0	90	0	90
	Left-Through-Right		0							0				0				0	
	Left-Right		0							0				0				0	
WESTBOUND	Left	68	1	**68**	0	68	**68**	0	71	1	**71**	0	71	1	**71**	0	71	1	**71**
	Left-Through		0							0				0				0	
	Through	659	1	346	20	679	356	1	690	1	362	20	710	1	372	0	710	1	372
	Through-Right		1							1				1				1	
	Right	32	0	32	0	32	32	0	33	0	33	0	33	0	33	0	33	0	33
	Left-Through-Right		0							0				0				0	
	Left-Right		0							0				0				0	
CRITICAL VOLUMES		*North-South:*		242	*North-South:*		242	*North-South:*			253	*North-South:*			253	*North-South:*			253
		East-West:		487	*East-West:*		497	*East-West:*			510	*East-West:*			520	*East-West:*			520
		SUM:		729	*SUM:*		739	*SUM:*			763	*SUM:*			773	*SUM:*			773
VOLUME/CAPACITY *(V/C)* RATIO:				0.486			0.493				0.509				0.515				0.515
V/C LESS ATSAC/ATCS ADJUSTMENT:				**0.386**			**0.393**				**0.409**				**0.415**				**0.415**
LEVEL OF SERVICE (LOS):				**A**			**A**				**A**				**A**				**A**

REMARKS: Alt. Route 1: Concurrent Use of All Three Disposal Sites

Version: 1i Beta; 8/4/2011

PROJECT IMPACT

Change in *v/c* due to project:	0.006	Δ*v/c* after mitigation:	0.006
Significant impacted?	NO	Fully mitigated?	N/A

Level of Service Workheet
(Circular 212 Method)

I/S #:	North-South Street:	Telfair Avenue	Year of Count:	2015	Ambient Growth: (%):	1.5	Conducted by:	City Traffic Counters	Date:	4/24/2015
CMA18	East-West Street:	Paxton Street	Projection Year:	2018	Peak Hour:	Mid-Day	Reviewed by:		Project:	Pacoima Reservoir Project/1-13-4

	Existing Condition	Existing Plus Project	Future Condition W/O Project	Future Condition W/ Project	Future W/ Project W/ Mitigation
No. of Phases	2	2	2	2	2
Opposed Ø'ing: N/S-1, E/W-2 or Both-3?	0	0	0	0	0
Right Turns: FREE-1, NRTOR-2 or OLA-3?	NB-- 0 SB-- 0 EB-- 0 WB-- 0	NB-- 0 SB-- 0 EB-- 0 WB-- 0	NB-- 0 SB-- 0 EB-- 0 WB-- 0	NB-- 0 SB-- 0 EB-- 0 WB-- 0	NB-- 0 SB-- 0 EB-- 0 WB-- 0
ATSAC-1 or ATSAC+ATCS-2?	2	2	2	2	2
Override Capacity	0	0	0	0	0

	MOVEMENT	Existing Condition Volume	No. of Lanes	Lane Volume	Existing Plus Project Project Traffic	Total Volume	Lane Volume	Future Condition W/O Project Added Volume	Total Volume	No. of Lanes	Lane Volume	Future Condition W/ Project Added Volume	Total Volume	No. of Lanes	Lane Volume	Future W/ Project W/ Mitigation Added Volume	Total Volume	No. of Lanes	Lane Volume
NORTHBOUND	Left	25	0	**25**	0	25	**25**	0	26	0	**26**	0	26	0	**26**	0	26	0	**26**
	Left-Through		0							0				0				0	
	Through	13	0	75	0	13	75	0	14	0	79	0	14	0	79	0	14	0	79
	Through-Right		0							0				0				0	
	Right	37	0	0	0	37	0	0	39	0	0	0	39	0	0	0	39	0	0
	Left-Through-Right		1							1				1				1	
	Left-Right		0							0				0				0	
SOUTHBOUND	Left	16	0	16	0	16	16	0	17	0	17	0	17	0	17	0	17	0	17
	Left-Through		0							0				0				0	
	Through	13	0	**78**	0	13	**78**	0	14	0	**82**	0	14	0	**82**	0	14	0	**82**
	Through-Right		0							0				0				0	
	Right	49	0	0	0	49	0	0	51	0	0	0	51	0	0	0	51	0	0
	Left-Through-Right		1							1				1				1	
	Left-Right		0							0				0				0	
EASTBOUND	Left	67	1	**67**	0	67	**67**	0	70	1	**70**	0	70	1	**70**	0	70	1	**70**
	Left-Through		0							0				0				0	
	Through	456	1	239	20	476	249	1	478	1	251	20	498	1	261	0	498	1	261
	Through-Right		1							1				1				1	
	Right	22	0	22	0	22	22	0	23	0	23	0	23	0	23	0	23	0	23
	Left-Through-Right		0							0				0				0	
	Left-Right		0							0				0				0	
WESTBOUND	Left	26	1	26	0	26	26	0	27	1	27	0	27	1	27	0	27	1	27
	Left-Through		0							0				0				0	
	Through	470	1	**247**	20	490	**257**	1	492	1	**258**	20	512	1	**268**	0	512	1	**268**
	Through-Right		1							1				1				1	
	Right	23	0	23	0	23	23	0	24	0	24	0	24	0	24	0	24	0	24
	Left-Through-Right		0							0				0				0	
	Left-Right		0							0				0				0	
CRITICAL VOLUMES		North-South:		103	North-South:		103	North-South:			108	North-South:			108	North-South:			108
		East-West:		314	East-West:		324	East-West:			328	East-West:			338	East-West:			338
		SUM:		417	SUM:		427	SUM:			436	SUM:			446	SUM:			446
VOLUME/CAPACITY (V/C) RATIO:				0.278			0.285				0.291				0.297				0.297
V/C LESS ATSAC/ATCS ADJUSTMENT:				**0.178**			**0.185**				**0.191**				**0.197**				**0.197**
LEVEL OF SERVICE (LOS):				**A**			**A**				**A**				**A**				**A**

REMARKS: Alt. Route 1: Concurrent Use of All Three Disposal Sites

Version: 1i Beta; 8/4/2011

PROJECT IMPACT

Change in *v/c* due to project:	0.006	Δ*v/c* after mitigation:	0.006
Significant impacted?	NO	Fully mitigated?	N/A

Level of Service Workheet
(Circular 212 Method)

I/S #:	North-South Street:	Telfair Avenue	Year of Count:	2015	Ambient Growth: (%):	1.5	Conducted by:	City Traffic Counters	Date:	4/24/2015
CMA18	East-West Street:	Paxton Street	Projection Year:	2018	Peak Hour:	PM	Reviewed by:		Project:	Pacoima Reservoir Project/1-13-4

No. of Phases				2				2				2				2				2			
Opposed Ø'ing: N/S-1, E/W-2 or Both-3?				0				0				0				0				0			
Right Turns: FREE-1, NRTOR-2 or OLA-3?	NB--	0	SB--	0	NB--	0	SB--	0	NB--	0	SB--	0	NB--	0	SB--	0	NB--	0	SB--	0			
	EB--	0	WB--	0	EB--	0	WB--	0	EB--	0	WB--	0	EB--	0	WB--	0	EB--	0	WB--	0			
ATSAC-1 or ATSAC+ATCS-2?				2				2				2				2				2			
Override Capacity				0				0				0				0				0			

	MOVEMENT	EXISTING CONDITION			EXISTING PLUS PROJECT			FUTURE CONDITION W/O PROJECT				FUTURE CONDITION W/ PROJECT				FUTURE W/ PROJECT W/ MITIGATION			
		Volume	No. of Lanes	Lane Volume	Project Traffic	Total Volume	Lane Volume	Added Volume	Total Volume	No. of Lanes	Lane Volume	Added Volume	Total Volume	No. of Lanes	Lane Volume	Added Volume	Total Volume	No. of Lanes	Lane Volume
NORTHBOUND	Left	39	0	**39**	0	39	**39**	0	41	0	**41**	0	41	0	**41**	0	41	0	**41**
	Left-Through		0							0				0				0	
	Through	48	0	130	0	48	130	0	50	0	136	0	50	0	136	0	50	0	136
	Through-Right		0							0				0				0	
	Right	43	0	0	0	43	0	0	45	0	0	0	45	0	0	0	45	0	0
	Left-Through-Right		1							1				1				1	
	Left-Right		0							0				0				0	
SOUTHBOUND	Left	29	0	29	0	29	29	0	30	0	30	0	30	0	30	0	30	0	30
	Left-Through		0							0				0				0	
	Through	29	0	**122**	0	29	**122**	0	30	0	**127**	0	30	0	**127**	0	30	0	**127**
	Through-Right		0							0				0				0	
	Right	64	0	0	0	64	0	0	67	0	0	0	67	0	0	0	67	0	0
	Left-Through-Right		1							1				1				1	
	Left-Right		0							0				0				0	
EASTBOUND	Left	109	1	109	0	109	109	0	114	1	114	0	114	1	114	0	114	1	114
	Left-Through		0							0				0				0	
	Through	924	1	**486**	20	944	**496**	1	967	1	**509**	20	987	1	**519**	0	987	1	**519**
	Through-Right		1							1				1				1	
	Right	48	0	48	0	48	48	0	50	0	50	0	50	0	50	0	50	0	50
	Left-Through-Right		0							0				0				0	
	Left-Right		0							0				0				0	
WESTBOUND	Left	51	1	**51**	0	51	**51**	0	53	1	**53**	0	53	1	**53**	0	53	1	**53**
	Left-Through		0							0				0				0	
	Through	662	1	351	20	682	361	1	693	1	368	20	713	1	378	0	713	1	378
	Through-Right		1							1				1				1	
	Right	40	0	40	0	40	40	0	42	0	42	0	42	0	42	0	42	0	42
	Left-Through-Right		0							0				0				0	
	Left-Right		0							0				0				0	
CRITICAL VOLUMES		*North-South:*		161	*North-South:*		161	*North-South:*			168	*North-South:*			168	*North-South:*			168
		East-West:		537	*East-West:*		547	*East-West:*			562	*East-West:*			572	*East-West:*			572
		SUM:		698	*SUM:*		708	*SUM:*			730	*SUM:*			740	*SUM:*			740
VOLUME/CAPACITY *(V/C)* RATIO:				0.465			0.472				0.487				0.493				0.493
V/C LESS ATSAC/ATCS ADJUSTMENT:				**0.365**			**0.372**				**0.387**				**0.393**				**0.393**
LEVEL OF SERVICE (LOS):				**A**			**A**				**A**				**A**				**A**

REMARKS: Alt. Route 1: Concurrent Use of All Three Disposal Sites

Version: 1i Beta; 8/4/2011

PROJECT IMPACT

Change in *v/c* due to project:	0.006	Δ*v/c* after mitigation:	0.006
Significant impacted?	NO	Fully mitigated?	N/A

Level of Service Workheet
(Circular 212 Method)

I/S #:	North-South Street:	San Fernando Road	Year of Count:	2015	Ambient Growth: (%):	1.5	Conducted by:	City Traffic Counters	Date:	4/24/2015
CMA19	East-West Street:	Paxton Street	Projection Year:	2018	Peak Hour:	AM	Reviewed by:		Project:	Pacoima Reservoir Project/1-13-4

No. of Phases				4				4				4				4				4		
Opposed Ø'ing: N/S-1, E/W-2 or Both-3?				2				2				2				2				2		
Right Turns: FREE-1, NRTOR-2 or OLA-3?	NB--	0	SB--	3	NB--	0	SB--	3	NB--	0	SB--	3	NB--	0	SB--	3	NB--	0	SB--	3		
	EB--	3	WB--	2	EB--	3	WB--	2	EB--	3	WB--	2	EB--	3	WB--	2	EB--	3	WB--	2		
ATSAC-1 or ATSAC+ATCS-2?				2				2				2				2				2		
Override Capacity				0				0				0				0				0		

	MOVEMENT	EXISTING CONDITION			EXISTING PLUS PROJECT			FUTURE CONDITION W/O PROJECT				FUTURE CONDITION W/ PROJECT				FUTURE W/ PROJECT W/ MITIGATION			
		Volume	No. of Lanes	Lane Volume	Project Traffic	Total Volume	Lane Volume	Added Volume	Total Volume	No. of Lanes	Lane Volume	Added Volume	Total Volume	No. of Lanes	Lane Volume	Added Volume	Total Volume	No. of Lanes	Lane Volume
NORTHBOUND	Left	33	1	33	20	53	53	0	35	1	35	20	55	1	55	0	55	1	55
	Left-Through		0							0				0				0	
	Through	696	2	**348**	0	696	**348**	12	740	2	**370**	0	740	2	**370**	0	740	2	**370**
	Through-Right		0							0				0				0	
	Right	383	1	304	0	383	304	0	400	1	318	0	400	1	318	0	400	1	318
	Left-Through-Right		0							0				0				0	
	Left-Right		0							0				0				0	
SOUTHBOUND	Left	153	1	**153**	0	153	**153**	0	160	1	**160**	0	160	1	**160**	0	160	1	**160**
	Left-Through		0							0				0				0	
	Through	749	2	375	0	749	375	20	803	2	402	0	803	2	402	0	803	2	402
	Through-Right		0							0				0				0	
	Right	278	1	180	0	278	180	0	291	1	189	0	291	1	189	0	291	1	189
	Left-Through-Right		0							0				0				0	
	Left-Right		0							0				0				0	
EASTBOUND	Left	98	1	98	0	98	98	0	102	1	102	0	102	1	102	0	102	1	102
	Left-Through		0							0				0				0	
	Through	741	2	**371**	0	741	**371**	1	776	2	**388**	0	776	2	**388**	0	776	2	**388**
	Through-Right		0							0				0				0	
	Right	44	1	11	20	64	11	0	46	1	11	20	66	1	11	0	66	1	11
	Left-Through-Right		0							0				0				0	
	Left-Right		0							0				0				0	
WESTBOUND	Left	158	1	158	0	158	158	0	165	1	165	0	165	1	165	0	165	1	165
	Left-Through		0							0				0				0	
	Through	533	1	**422**	0	533	**422**	1	558	1	**441**	0	558	1	**441**	0	558	1	**441**
	Through-Right		1							1				1				1	
	Right	310	0	310	0	310	310	0	324	0	324	0	324	0	324	0	324	0	324
	Left-Through-Right		0							0				0				0	
	Left-Right		0							0				0				0	
CRITICAL VOLUMES		*North-South:*		501	*North-South:*		501	*North-South:*			530	*North-South:*			530	*North-South:*			530
		East-West:		793	*East-West:*		793	*East-West:*			829	*East-West:*			829	*East-West:*			829
		SUM:		1294	*SUM:*		1294	*SUM:*			1359	*SUM:*			1359	*SUM:*			1359
VOLUME/CAPACITY *(V/C)* RATIO:				0.941			0.941				0.988				0.988				0.988
V/C LESS ATSAC/ATCS ADJUSTMENT:				**0.841**			**0.841**				**0.888**				**0.888**				**0.888**
LEVEL OF SERVICE (LOS):				**D**			**D**				**D**				**D**				**D**

REMARKS: Alt. Route 1: Concurrent Use of All Three Disposal Sites

Version: 1i Beta; 8/4/2011

PROJECT IMPACT

Change in *v/c* due to project:	0.000	Δ*v/c* after mitigation:	0.000
Significant impacted?	NO	Fully mitigated?	N/A

Level of Service Workheet
(Circular 212 Method)

I/S #:	North-South Street:	San Fernando Road	Year of Count:	2015	Ambient Growth: (%):	1.5	Conducted by:	City Traffic Counters	Date:	4/24/2015
CMA19	East-West Street:	Paxton Street	Projection Year:	2018	Peak Hour:	Mid-Day	Reviewed by:		Project:	Pacoima Reservoir Project/1-13-4

	Existing Condition	Existing Plus Project	Future Condition W/O Project	Future Condition W/ Project	Future W/ Project W/ Mitigation
No. of Phases	4	4	4	4	4
Opposed Ø'ing: N/S-1, E/W-2 or Both-3?	2	2	2	2	2
Right Turns: FREE-1, NRTOR-2 or OLA-3?	NB-- 0 SB-- 3 EB-- 3 WB-- 2	NB-- 0 SB-- 3 EB-- 3 WB-- 2	NB-- 0 SB-- 3 EB-- 3 WB-- 2	NB-- 0 SB-- 3 EB-- 3 WB-- 2	NB-- 0 SB-- 3 EB-- 3 WB-- 2
ATSAC-1 or ATSAC+ATCS-2?	2	2	2	2	2
Override Capacity	0	0	0	0	0

	MOVEMENT	Existing Condition Volume	No. of Lanes	Lane Volume	Existing Plus Project Project Traffic	Total Volume	Lane Volume	Future Condition W/O Project Added Volume	Total Volume	No. of Lanes	Lane Volume	Future Condition W/ Project Added Volume	Total Volume	No. of Lanes	Lane Volume	Future W/ Project W/ Mitigation Added Volume	Total Volume	No. of Lanes	Lane Volume
NORTHBOUND	Left	50	1	50	20	70	70	0	52	1	52	20	72	1	72	0	72	1	72
	Left-Through		0							0				0				0	
	Through	759	2	**380**	0	759	**380**	9	803	2	**402**	0	803	2	**402**	0	803	2	**402**
	Through-Right		0							0				0				0	
	Right	286	1	205	0	286	205	0	299	1	215	0	299	1	215	0	299	1	215
	Left-Through-Right		0							0				0				0	
	Left-Right		0							0				0				0	
SOUTHBOUND	Left	169	1	**169**	0	169	**169**	0	177	1	**177**	0	177	1	**177**	0	177	1	**177**
	Left-Through		0							0				0				0	
	Through	553	2	277	0	553	277	7	585	2	293	0	585	2	293	0	585	2	293
	Through-Right		0							0				0				0	
	Right	178	1	77	0	178	77	0	186	1	80	0	186	1	80	0	186	1	80
	Left-Through-Right		0							0				0				0	
	Left-Right		0							0				0				0	
EASTBOUND	Left	101	1	101	0	101	101	0	106	1	106	0	106	1	106	0	106	1	106
	Left-Through		0							0				0				0	
	Through	326	2	**163**	0	326	**163**	1	342	2	**171**	0	342	2	**171**	0	342	2	**171**
	Through-Right		0							0				0				0	
	Right	152	1	102	20	172	102	0	159	1	107	20	179	1	107	0	179	1	107
	Left-Through-Right		0							0				0				0	
	Left-Right		0							0				0				0	
WESTBOUND	Left	162	1	162	0	162	162	0	169	1	169	0	169	1	169	0	169	1	169
	Left-Through		0							0				0				0	
	Through	386	1	**371**	0	386	**371**	1	405	1	**389**	0	405	1	**389**	0	405	1	**389**
	Through-Right		1							1				1				1	
	Right	356	0	356	0	356	356	0	372	0	372	0	372	0	372	0	372	0	372
	Left-Through-Right		0							0				0				0	
	Left-Right		0							0				0				0	
CRITICAL VOLUMES		North-South:		549	North-South:		549	North-South:			579	North-South:			579	North-South:			579
		East-West:		534	East-West:		534	East-West:			560	East-West:			560	East-West:			560
		SUM:		1083	SUM:		1083	SUM:			1139	SUM:			1139	SUM:			1139
VOLUME/CAPACITY (V/C) RATIO:				0.788			0.788				0.828				0.828				0.828
V/C LESS ATSAC/ATCS ADJUSTMENT:				**0.688**			**0.688**				**0.728**				**0.728**				**0.728**
LEVEL OF SERVICE (LOS):				**B**			**B**				**C**				**C**				**C**

REMARKS: Alt. Route 1: Concurrent Use of All Three Disposal Sites

Version: 1i Beta; 8/4/2011

PROJECT IMPACT

Change in *v/c* due to project:	0.000	Δ*v/c* after mitigation:	0.000
Significant impacted?	NO	Fully mitigated?	N/A

Level of Service Workheet
(Circular 212 Method)

I/S #:	North-South Street:	San Fernando Road	Year of Count:	2015	Ambient Growth: (%):	1.5	Conducted by:	City Traffic Counters	Date:	4/24/2015
CMA19	East-West Street:	Paxton Street	Projection Year:	2018	Peak Hour:	PM	Reviewed by:		Project:	Pacoima Reservoir Project/1-13-4

No. of Phases				4				4				4				4				4			
Opposed Ø'ing: N/S-1, E/W-2 or Both-3?				2				2				2				2				2			
Right Turns: FREE-1, NRTOR-2 or OLA-3?	NB--	0	SB--	3	NB--	0	SB--	3	NB--	0	SB--	3	NB--	0	SB--	3	NB--	0	SB--	3	NB--	0	SB--	3
	EB--	3	WB--	2	EB--	3	WB--	2	EB--	3	WB--	2	EB--	3	WB--	2	EB--	3	WB--	2	EB--	3	WB--	2
ATSAC-1 or ATSAC+ATCS-2?				2				2				2				2				2				2
Override Capacity				0				0				0				0				0				0

MOVEMENT		EXISTING CONDITION			EXISTING PLUS PROJECT			FUTURE CONDITION W/O PROJECT				FUTURE CONDITION W/ PROJECT				FUTURE W/ PROJECT W/ MITIGATION			
		Volume	No. of Lanes	Lane Volume	Project Traffic	Total Volume	Lane Volume	Added Volume	Total Volume	No. of Lanes	Lane Volume	Added Volume	Total Volume	No. of Lanes	Lane Volume	Added Volume	Total Volume	No. of Lanes	Lane Volume
NORTHBOUND	Left	45	1	45	20	65	65	0	47	1	47	20	67	1	67	0	67	1	67
	Left-Through		0							0				0				0	
	Through	715	2	**358**	0	715	**358**	14	762	2	**381**	0	762	2	**381**	0	762	2	**381**
	Through-Right		0							0				0				0	
	Right	293	1	214	0	293	214	0	306	1	223	0	306	1	223	0	306	1	223
	Left-Through-Right		0							0				0				0	
	Left-Right		0							0				0				0	
SOUTHBOUND	Left	139	1	**139**	0	139	**139**	0	145	1	**145**	0	145	1	**145**	0	145	1	**145**
	Left-Through		0							0				0				0	
	Through	727	2	364	0	727	364	10	770	2	385	0	770	2	385	0	770	2	385
	Through-Right		0							0				0				0	
	Right	169	1	48	0	169	48	0	177	1	50	0	177	1	50	0	177	1	50
	Left-Through-Right		0							0				0				0	
	Left-Right		0							0				0				0	
EASTBOUND	Left	121	1	121	0	121	121	0	127	1	127	0	127	1	127	0	127	1	127
	Left-Through		0							0				0				0	
	Through	642	2	**321**	0	642	**321**	1	672	2	**336**	0	672	2	**336**	0	672	2	**336**
	Through-Right		0							0				0				0	
	Right	191	1	146	20	211	146	0	200	1	153	20	220	1	153	0	220	1	153
	Left-Through-Right		0							0				0				0	
	Left-Right		0							0				0				0	
WESTBOUND	Left	159	1	159	0	159	159	0	166	1	166	0	166	1	166	0	166	1	166
	Left-Through		0							0				0				0	
	Through	556	1	**442**	0	556	**442**	1	582	1	**463**	0	582	1	**463**	0	582	1	**463**
	Through-Right		1							1				1				1	
	Right	328	0	328	0	328	328	0	343	0	343	0	343	0	343	0	343	0	343
	Left-Through-Right		0							0				0				0	
	Left-Right		0							0				0				0	
CRITICAL VOLUMES			*North-South:*	497		*North-South:*	497			*North-South:*	526			*North-South:*	526			*North-South:*	526
			East-West:	763		*East-West:*	763			*East-West:*	799			*East-West:*	799			*East-West:*	799
			SUM:	1260		*SUM:*	1260			*SUM:*	1325			*SUM:*	1325			*SUM:*	1325
VOLUME/CAPACITY *(V/C)* RATIO:				0.916			0.916				0.964				0.964				0.964
V/C LESS ATSAC/ATCS ADJUSTMENT:				**0.816**			**0.816**				**0.864**				**0.864**				**0.864**
LEVEL OF SERVICE (LOS):				**D**			**D**				**D**				**D**				**D**

REMARKS: Alt. Route 1: Concurrent Use of All Three Disposal Sites

Version: 1i Beta; 8/4/2011

PROJECT IMPACT

Change in *v/c* due to project:	0.000	Δ*v/c* after mitigation:	0.000
Significant impacted?	NO	Fully mitigated?	N/A

Level of Service Workheet
(Circular 212 Method)

I/S #:	North-South Street:	San Fernando Road	Year of Count:	2015	Ambient Growth: (%):	1.5	Conducted by:	City Traffic Counters	Date:	4/24/2015
CMA20	East-West Street:	SR-118 Freeway EB Ramps	Projection Year:	2018	Peak Hour:	AM	Reviewed by:		Project:	Pacoima Reservoir Project/1-13-4

No. of Phases				2				2				2				2				2			
Opposed Ø'ing: N/S-1, E/W-2 or Both-3?				0				0				0				0				0			
Right Turns: FREE-1, NRTOR-2 or OLA-3?	NB--	0	SB--	3	NB--	0	SB--	3	NB--	0	SB--	3	NB--	0	SB--	3	NB--	0	SB--	3	NB--	0	SB--	3
	EB--	0	WB--	0	EB--	0	WB--	0	EB--	0	WB--	0	EB--	0	WB--	0	EB--	0	WB--	0	EB--	0	WB--	0
ATSAC-1 or ATSAC+ATCS-2?				2				2				2				2				2				2
Override Capacity				0				0				0				0				0				0

	MOVEMENT	EXISTING CONDITION			EXISTING PLUS PROJECT			FUTURE CONDITION W/O PROJECT				FUTURE CONDITION W/ PROJECT				FUTURE W/ PROJECT W/ MITIGATION			
		Volume	No. of Lanes	Lane Volume	Project Traffic	Total Volume	Lane Volume	Added Volume	Total Volume	No. of Lanes	Lane Volume	Added Volume	Total Volume	No. of Lanes	Lane Volume	Added Volume	Total Volume	No. of Lanes	Lane Volume
NORTHBOUND	Left	92	1	**92**	0	92	**92**	0	96	1	**96**	0	96	1	**96**	0	96	1	**96**
	Left-Through		0							0				0				0	
	Through	621	2	311	20	641	321	12	661	2	331	20	681	2	341	0	681	2	341
	Through-Right		0							0				0				0	
	Right	0	0	0	0	0	0	0	0	0	0	0	0	0	0	0	0	0	0
	Left-Through-Right		0							0				0				0	
	Left-Right		0							0				0				0	
SOUTHBOUND	Left	0	0	0	0	0	0	0	0	0	0	0	0	0	0	0	0	0	0
	Left-Through		0							0				0				0	
	Through	789	2	**395**	20	809	**405**	20	845	2	**423**	20	865	2	**433**	0	865	2	**433**
	Through-Right		0							0				0				0	
	Right	218	1	0	0	218	0	0	228	1	0	0	228	1	0	0	228	1	0
	Left-Through-Right		0							0				0				0	
	Left-Right		0							0				0				0	
EASTBOUND	Left	517	1	477	0	517	477	0	541	1	499	0	541	1	499	0	541	1	499
	Left-Through		0							0				0				0	
	Through	0	0	0	0	0	0	0	0	0	0	0	0	0	0	0	0	0	0
	Through-Right		0							0				0				0	
	Right	436	0	**477**	0	436	**477**	0	456	0	**499**	0	456	0	**499**	0	456	0	**499**
	Left-Through-Right		0							0				0				0	
	Left-Right		1							1				1				1	
WESTBOUND	Left	0	0	**0**	0	0	**0**	0	0	0	**0**	0	0	0	**0**	0	0	0	**0**
	Left-Through		0							0				0				0	
	Through	0	0	0	0	0	0	0	0	0	0	0	0	0	0	0	0	0	0
	Through-Right		0							0				0				0	
	Right	0	0	0	0	0	0	0	0	0	0	0	0	0	0	0	0	0	0
	Left-Through-Right		0							0				0				0	
	Left-Right		0							0				0				0	
CRITICAL VOLUMES		North-South:		487	North-South:		497	North-South:			519	North-South:			529	North-South:			529
		East-West:		477	East-West:		477	East-West:			499	East-West:			499	East-West:			499
		SUM:		964	SUM:		974	SUM:			1018	SUM:			1028	SUM:			1028
VOLUME/CAPACITY (V/C) RATIO:				0.643			0.649				0.679				0.685				0.685
V/C LESS ATSAC/ATCS ADJUSTMENT:				**0.543**			**0.549**				**0.579**				**0.585**				**0.585**
LEVEL OF SERVICE (LOS):				**A**			**A**				**A**				**A**				**A**

REMARKS: Alt. Route 1: Concurrent Use of All Three Disposal Sites

Version: 1i Beta; 8/4/2011

PROJECT IMPACT

Change in *v/c* due to project:	0.006	Δ*v/c* after mitigation:	0.006
Significant impacted?	NO	Fully mitigated?	N/A

Level of Service Workheet
(Circular 212 Method)

I/S #:	North-South Street:	San Fernando Road	Year of Count:	2015	Ambient Growth: (%):	1.5	Conducted by:	City Traffic Counters	Date:	4/24/2015
CMA20	East-West Street:	SR-118 Freeway EB Ramps	Projection Year:	2018	Peak Hour:	Mid-Day	Reviewed by:		Project:	Pacoima Reservoir Project/1-13-4

No. of Phases				2				2				2				2				2			
Opposed Ø'ing: N/S-1, E/W-2 or Both-3?				0				0				0				0				0			
Right Turns: FREE-1, NRTOR-2 or OLA-3?	NB--	0	SB--	3	NB--	0	SB--	3	NB--	0	SB--	3	NB--	0	SB--	3	NB--	0	SB--	3	NB--	0	SB--	3
	EB--	0	WB--	0	EB--	0	WB--	0	EB--	0	WB--	0	EB--	0	WB--	0	EB--	0	WB--	0	EB--	0	WB--	0
ATSAC-1 or ATSAC+ATCS-2?				2				2				2				2				2				2
Override Capacity				0				0				0				0				0				0

	MOVEMENT	EXISTING CONDITION			EXISTING PLUS PROJECT			FUTURE CONDITION W/O PROJECT				FUTURE CONDITION W/ PROJECT				FUTURE W/ PROJECT W/ MITIGATION			
		Volume	No. of Lanes	Lane Volume	Project Traffic	Total Volume	Lane Volume	Added Volume	Total Volume	No. of Lanes	Lane Volume	Added Volume	Total Volume	No. of Lanes	Lane Volume	Added Volume	Total Volume	No. of Lanes	Lane Volume
NORTHBOUND	Left	68	1	**68**	0	68	**68**	0	71	1	**71**	0	71	1	**71**	0	71	1	**71**
	Left-Through		0							0				0				0	
	Through	625	2	313	20	645	323	9	663	2	332	20	683	2	342	0	683	2	342
	Through-Right		0							0				0				0	
	Right	0	0	0	0	0	0	0	0	0	0	0	0	0	0	0	0	0	0
	Left-Through-Right		0							0				0				0	
	Left-Right		0							0				0				0	
SOUTHBOUND	Left	0	0	0	0	0	0	0	0	0	0	0	0	0	0	0	0	0	0
	Left-Through		0							0				0				0	
	Through	644	2	**322**	20	664	**332**	7	680	2	**340**	20	700	2	**350**	0	700	2	**350**
	Through-Right		0							0				0				0	
	Right	176	1	0	0	176	0	0	184	1	0	0	184	1	0	0	184	1	0
	Left-Through-Right		0							0				0				0	
	Left-Right		0							0				0				0	
EASTBOUND	Left	525	1	343	0	525	343	0	549	1	359	0	549	1	359	0	549	1	359
	Left-Through		0							0				0				0	
	Through	0	0	0	0	0	0	0	0	0	0	0	0	0	0	0	0	0	0
	Through-Right		0							0				0				0	
	Right	161	0	**343**	0	161	**343**	0	168	0	**359**	0	168	0	**359**	0	168	0	**359**
	Left-Through-Right		0							0				0				0	
	Left-Right		1							1				1				1	
WESTBOUND	Left	0	0	**0**	0	0	**0**	0	0	0	**0**	0	0	0	**0**	0	0	0	**0**
	Left-Through		0							0				0				0	
	Through	0	0	0	0	0	0	0	0	0	0	0	0	0	0	0	0	0	0
	Through-Right		0							0				0				0	
	Right	0	0	0	0	0	0	0	0	0	0	0	0	0	0	0	0	0	0
	Left-Through-Right		0							0				0				0	
	Left-Right		0							0				0				0	
CRITICAL VOLUMES		*North-South:*		390	*North-South:*		400	*North-South:*			411	*North-South:*			421	*North-South:*			421
		East-West:		343	*East-West:*		343	*East-West:*			359	*East-West:*			359	*East-West:*			359
		SUM:		733	*SUM:*		743	*SUM:*			770	*SUM:*			780	*SUM:*			780
VOLUME/CAPACITY *(V/C)* RATIO:				0.489			0.495				0.513				0.520				0.520
V/C LESS ATSAC/ATCS ADJUSTMENT:				**0.389**			**0.395**				**0.413**				**0.420**				**0.420**
LEVEL OF SERVICE (LOS):				**A**			**A**				**A**				**A**				**A**

REMARKS: Alt. Route 1: Concurrent Use of All Three Disposal Sites

Version: 1i Beta; 8/4/2011

PROJECT IMPACT

Change in *v/c* due to project:	0.007	Δ*v/c* after mitigation:	0.007
Significant impacted?	NO	Fully mitigated?	N/A

Level of Service Workheet
(Circular 212 Method)

I/S #:	North-South Street:	San Fernando Road	Year of Count:	2015	Ambient Growth: (%):	1.5	Conducted by:	City Traffic Counters	Date:	4/24/2015
CMA20	East-West Street:	SR-118 Freeway EB Ramps	Projection Year:	2018	Peak Hour:	PM	Reviewed by:		Project:	Pacoima Reservoir Project/1-13-4

No. of Phases				2				2				2				2				2			
Opposed Ø'ing: N/S-1, E/W-2 or Both-3?				0				0				0				0				0			
Right Turns: FREE-1, NRTOR-2 or OLA-3?	NB--	0	SB--	3	NB--	0	SB--	3	NB--	0	SB--	3	NB--	0	SB--	3	NB--	0	SB--	3	NB--	0	SB--	3
	EB--	0	WB--	0	EB--	0	WB--	0	EB--	0	WB--	0	EB--	0	WB--	0	EB--	0	WB--	0	EB--	0	WB--	0
ATSAC-1 or ATSAC+ATCS-2?				2				2				2				2				2				2
Override Capacity				0				0				0				0				0				0

	MOVEMENT	EXISTING CONDITION			EXISTING PLUS PROJECT			FUTURE CONDITION W/O PROJECT				FUTURE CONDITION W/ PROJECT				FUTURE W/ PROJECT W/ MITIGATION			
		Volume	No. of Lanes	Lane Volume	Project Traffic	Total Volume	Lane Volume	Added Volume	Total Volume	No. of Lanes	Lane Volume	Added Volume	Total Volume	No. of Lanes	Lane Volume	Added Volume	Total Volume	No. of Lanes	Lane Volume
NORTHBOUND	Left	124	1	**124**	0	124	**124**	0	130	1	**130**	0	130	1	**130**	0	130	1	**130**
	Left-Through		0							0				0				0	
	Through	803	2	402	20	823	412	14	854	2	427	20	874	2	437	0	874	2	437
	Through-Right		0							0				0				0	
	Right	0	0	0	0	0	0	0	0	0	0	0	0	0	0	0	0	0	0
	Left-Through-Right		0							0				0				0	
	Left-Right		0							0				0				0	
SOUTHBOUND	Left	0	0	0	0	0	0	0	0	0	0	0	0	0	0	0	0	0	0
	Left-Through		0							0				0				0	
	Through	826	2	**413**	20	846	**423**	10	874	2	**437**	20	894	2	**447**	0	894	2	**447**
	Through-Right		0							0				0				0	
	Right	256	1	0	0	256	0	0	268	1	0	0	268	1	0	0	268	1	0
	Left-Through-Right		0							0				0				0	
	Left-Right		0							0				0				0	
EASTBOUND	Left	500	1	375	0	500	375	0	523	1	392	0	523	1	392	0	523	1	392
	Left-Through		0							0				0				0	
	Through	0	0	0	0	0	0	0	0	0	0	0	0	0	0	0	0	0	0
	Through-Right		0							0				0				0	
	Right	250	0	**375**	0	250	**375**	0	261	0	**392**	0	261	0	**392**	0	261	0	**392**
	Left-Through-Right		0							0				0				0	
	Left-Right		1							1				1				1	
WESTBOUND	Left	0	0	**0**	0	0	**0**	0	0	0	**0**	0	0	0	**0**	0	0	0	**0**
	Left-Through		0							0				0				0	
	Through	0	0	0	0	0	0	0	0	0	0	0	0	0	0	0	0	0	0
	Through-Right		0							0				0				0	
	Right	0	0	0	0	0	0	0	0	0	0	0	0	0	0	0	0	0	0
	Left-Through-Right		0							0				0				0	
	Left-Right		0							0				0				0	
CRITICAL VOLUMES		*North-South:*		537	*North-South:*		547	*North-South:*			567	*North-South:*			577	*North-South:*			577
		East-West:		375	*East-West:*		375	*East-West:*			392	*East-West:*			392	*East-West:*			392
		SUM:		912	*SUM:*		922	*SUM:*			959	*SUM:*			969	*SUM:*			969
VOLUME/CAPACITY *(V/C)* RATIO:				0.608			0.615				0.639				0.646				0.646
V/C LESS ATSAC/ATCS ADJUSTMENT:				**0.508**			**0.515**				**0.539**				**0.546**				**0.546**
LEVEL OF SERVICE (LOS):				**A**			**A**				**A**				**A**				**A**

REMARKS: Alt. Route 1: Concurrent Use of All Three Disposal Sites

Version: 1i Beta; 8/4/2011

PROJECT IMPACT

Change in *v/c* due to project:	0.007	Δ*v/c* after mitigation:	0.007
Significant impacted?	NO	Fully mitigated?	N/A

Level of Service Workheet
(Circular 212 Method)

I/S #:	North-South Street:	San Fernando Road	Year of Count:	2015	Ambient Growth: (%):	1.5	Conducted by:	City Traffic Counters	Date:	4/24/2015
CMA21	East-West Street:	Van Nuys Boulevard	Projection Year:	2018	Peak Hour:	AM	Reviewed by:		Project:	Pacoima Reservoir Project/1-13-4

No. of Phases			4			4			4			4			4			4
Opposed Ø'ing: N/S-1, E/W-2 or Both-3?			0			0			0			0			0			0
Right Turns: FREE-1, NRTOR-2 or OLA-3?	NB-- 0	SB--	0	NB-- 0	SB--	0	NB-- 0	SB--	0	NB-- 0	SB--	0	NB-- 0	SB--	0	NB-- 0	SB--	0
	EB-- 3	WB--	2	EB-- 3	WB--	2	EB-- 3	WB--	2	EB-- 3	WB--	2	EB-- 3	WB--	2	EB-- 3	WB--	2
ATSAC-1 or ATSAC+ATCS-2?			2			2			2			2			2			2
Override Capacity			0			0			0			0			0			0

MOVEMENT		EXISTING CONDITION			EXISTING PLUS PROJECT			FUTURE CONDITION W/O PROJECT				FUTURE CONDITION W/ PROJECT				FUTURE W/ PROJECT W/ MITIGATION			
		Volume	No. of Lanes	Lane Volume	Project Traffic	Total Volume	Lane Volume	Added Volume	Total Volume	No. of Lanes	Lane Volume	Added Volume	Total Volume	No. of Lanes	Lane Volume	Added Volume	Total Volume	No. of Lanes	Lane Volume
NORTHBOUND	Left	41	1	**41**	0	41	**41**	2	45	1	**45**	0	45	1	**45**	0	45	1	**45**
	Left-Through		0							0				0				0	
	Through	475	1	309	20	495	319	11	508	1	329	20	528	1	339	0	528	1	339
	Through-Right		1							1				1				1	
	Right	143	0	143	0	143	143	0	150	0	150	0	150	0	150	0	150	0	150
	Left-Through-Right		0							0				0				0	
	Left-Right		0							0				0				0	
SOUTHBOUND	Left	183	1	183	0	183	183	0	191	1	191	0	191	1	191	0	191	1	191
	Left-Through		0							0				0				0	
	Through	949	1	**511**	20	969	**521**	19	1011	1	**544**	20	1031	1	**554**	0	1031	1	**554**
	Through-Right		1							1				1				1	
	Right	72	0	72	0	72	72	1	76	0	76	0	76	0	76	0	76	0	76
	Left-Through-Right		0							0				0				0	
	Left-Right		0							0				0				0	
EASTBOUND	Left	111	1	111	0	111	111	1	117	1	117	0	117	1	117	0	117	1	117
	Left-Through		0							0				0				0	
	Through	858	2	**429**	0	858	**429**	24	921	2	**461**	0	921	2	**461**	0	921	2	**461**
	Through-Right		0							0				0				0	
	Right	51	1	10	0	51	10	1	54	1	9	0	54	1	9	0	54	1	9
	Left-Through-Right		0							0				0				0	
	Left-Right		0							0				0				0	
WESTBOUND	Left	216	1	**216**	0	216	**216**	0	226	1	**226**	0	226	1	**226**	0	226	1	**226**
	Left-Through		0							0				0				0	
	Through	807	2	404	0	807	404	20	864	2	432	0	864	2	432	0	864	2	432
	Through-Right		0							0				0				0	
	Right	106	1	106	0	106	106	0	111	1	111	0	111	1	111	0	111	1	111
	Left-Through-Right		0							0				0				0	
	Left-Right		0							0				0				0	
CRITICAL VOLUMES		*North-South:*		552	*North-South:*		562	*North-South:*			589	*North-South:*			599	*North-South:*			599
		East-West:		645	*East-West:*		645	*East-West:*			687	*East-West:*			687	*East-West:*			687
		SUM:		1197	*SUM:*		1207	*SUM:*			1276	*SUM:*			1286	*SUM:*			1286
VOLUME/CAPACITY *(V/C)* RATIO:				0.871			0.878				0.928				0.935				0.935
V/C LESS ATSAC/ATCS ADJUSTMENT:				**0.771**			**0.778**				**0.828**				**0.835**				**0.835**
LEVEL OF SERVICE (LOS):				**C**			**C**				**D**				**D**				**D**

REMARKS: Alt. Route 1: Concurrent Use of All Three Disposal Sites

Version: 1i Beta; 8/4/2011

PROJECT IMPACT

Change in *v/c* due to project:	0.007	Δ*v/c* after mitigation:	0.007
Significant impacted?	NO	Fully mitigated?	N/A

Level of Service Workheet
(Circular 212 Method)

I/S #:	North-South Street:	San Fernando Road	Year of Count:	2015	Ambient Growth: (%):	1.5	Conducted by:	City Traffic Counters	Date:	4/24/2015
CMA21	East-West Street:	Van Nuys Boulevard	Projection Year:	2018	Peak Hour:	Mid-Day	Reviewed by:		Project:	Pacoima Reservoir Project/1-13-4

No. of Phases				4				4				4				4				4			
Opposed Ø'ing: N/S-1, E/W-2 or Both-3?				0				0				0				0				0			
Right Turns: FREE-1, NRTOR-2 or OLA-3?	NB--	0	SB--	0	NB--	0	SB--	0	NB--	0	SB--	0	NB--	0	SB--	0	NB--	0	SB--	0			
	EB--	3	WB--	2	EB--	3	WB--	2	EB--	3	WB--	2	EB--	3	WB--	2	EB--	3	WB--	2			
ATSAC-1 or ATSAC+ATCS-2?				2				2				2				2				2			
Override Capacity				0				0				0				0				0			

	MOVEMENT	EXISTING CONDITION			EXISTING PLUS PROJECT			FUTURE CONDITION W/O PROJECT				FUTURE CONDITION W/ PROJECT				FUTURE W/ PROJECT W/ MITIGATION			
		Volume	No. of Lanes	Lane Volume	Project Traffic	Total Volume	Lane Volume	Added Volume	Total Volume	No. of Lanes	Lane Volume	Added Volume	Total Volume	No. of Lanes	Lane Volume	Added Volume	Total Volume	No. of Lanes	Lane Volume
NORTHBOUND	Left	58	1	58	0	58	58	2	63	1	63	0	63	1	63	0	63	1	63
	Left-Through		0							0				0				0	
	Through	460	1	**273**	20	480	**283**	8	489	1	**290**	20	509	1	**300**	0	509	1	**300**
	Through-Right		1							1				1				1	
	Right	86	0	86	0	86	86	0	90	0	90	0	90	0	90	0	90	0	90
	Left-Through-Right		0							0				0				0	
	Left-Right		0							0				0				0	
SOUTHBOUND	Left	97	1	**97**	0	97	**97**	0	101	1	**101**	0	101	1	**101**	0	101	1	**101**
	Left-Through		0							0				0				0	
	Through	435	1	282	20	455	292	6	461	1	299	20	481	1	309	0	481	1	309
	Through-Right		1							1				1				1	
	Right	129	0	129	0	129	129	1	136	0	136	0	136	0	136	0	136	0	136
	Left-Through-Right		0							0				0				0	
	Left-Right		0							0				0				0	
EASTBOUND	Left	117	1	**117**	0	117	**117**	1	123	1	**123**	0	123	1	**123**	0	123	1	**123**
	Left-Through		0							0				0				0	
	Through	680	2	340	0	680	340	1	712	2	356	0	712	2	356	0	712	2	356
	Through-Right		0							0				0				0	
	Right	92	1	34	0	92	34	1	97	1	34	0	97	1	34	0	97	1	34
	Left-Through-Right		0							0				0				0	
	Left-Right		0							0				0				0	
WESTBOUND	Left	71	1	71	0	71	71	0	74	1	74	0	74	1	74	0	74	1	74
	Left-Through		0							0				0				0	
	Through	605	2	**303**	0	605	**303**	1	634	2	**317**	0	634	2	**317**	0	634	2	**317**
	Through-Right		0							0				0				0	
	Right	81	1	81	0	81	81	0	85	1	85	0	85	1	85	0	85	1	85
	Left-Through-Right		0							0				0				0	
	Left-Right		0							0				0				0	
CRITICAL VOLUMES		*North-South:*		370	*North-South:*		380	*North-South:*			391	*North-South:*			401	*North-South:*			401
		East-West:		420	*East-West:*		420	*East-West:*			440	*East-West:*			440	*East-West:*			440
		SUM:		790	*SUM:*		800	*SUM:*			831	*SUM:*			841	*SUM:*			841
VOLUME/CAPACITY *(V/C)* RATIO:				0.575			0.582				0.604				0.612				0.612
V/C LESS ATSAC/ATCS ADJUSTMENT:				**0.475**			**0.482**				**0.504**				**0.512**				**0.512**
LEVEL OF SERVICE (LOS):				**A**			**A**				**A**				**A**				**A**

REMARKS: Alt. Route 1: Concurrent Use of All Three Disposal Sites

Version: 1i Beta; 8/4/2011

PROJECT IMPACT

Change in *v/c* due to project:	0.008	Δ*v/c* after mitigation:	0.008
Significant impacted?	NO	Fully mitigated?	N/A

Level of Service Workheet
(Circular 212 Method)

I/S #:	North-South Street:	San Fernando Road	Year of Count:	2015	Ambient Growth: (%):	1.5	Conducted by:	City Traffic Counters	Date:	4/24/2015
CMA21	East-West Street:	Van Nuys Boulevard	Projection Year:	2018	Peak Hour:	PM	Reviewed by:		Project:	Pacoima Reservoir Project/1-13-4

No. of Phases				4				4				4				4				4			
Opposed Ø'ing: N/S-1, E/W-2 or Both-3?				0				0				0				0				0			
Right Turns: FREE-1, NRTOR-2 or OLA-3?	NB--	0	SB--	0	NB--	0	SB--	0	NB--	0	SB--	0	NB--	0	SB--	0	NB--	0	SB--	0			
	EB--	3	WB--	2	EB--	3	WB--	2	EB--	3	WB--	2	EB--	3	WB--	2	EB--	3	WB--	2			
ATSAC-1 or ATSAC+ATCS-2?				2				2				2				2				2			
Override Capacity				0				0				0				0				0			

	MOVEMENT	EXISTING CONDITION			EXISTING PLUS PROJECT			FUTURE CONDITION W/O PROJECT				FUTURE CONDITION W/ PROJECT				FUTURE W/ PROJECT W/ MITIGATION			
		Volume	No. of Lanes	Lane Volume	Project Traffic	Total Volume	Lane Volume	Added Volume	Total Volume	No. of Lanes	Lane Volume	Added Volume	Total Volume	No. of Lanes	Lane Volume	Added Volume	Total Volume	No. of Lanes	Lane Volume
NORTHBOUND	Left	85	1	85	0	85	85	2	91	1	91	0	91	1	91	0	91	1	91
	Left-Through		0							0				0				0	
	Through	628	1	**365**	20	648	**375**	13	670	1	**389**	20	690	1	**399**	0	690	1	**399**
	Through-Right		1							1				1				1	
	Right	102	0	102	0	102	102	0	107	0	107	0	107	0	107	0	107	0	107
	Left-Through-Right		0							0				0				0	
	Left-Right		0							0				0				0	
SOUTHBOUND	Left	139	1	**139**	0	139	**139**	0	145	1	**145**	0	145	1	**145**	0	145	1	**145**
	Left-Through		0							0				0				0	
	Through	575	1	365	20	595	375	9	610	1	387	20	630	1	397	0	630	1	397
	Through-Right		1							1				1				1	
	Right	155	0	155	0	155	155	1	163	0	163	0	163	0	163	0	163	0	163
	Left-Through-Right		0							0				0				0	
	Left-Right		0							0				0				0	
EASTBOUND	Left	82	1	82	0	82	82	1	87	1	87	0	87	1	87	0	87	1	87
	Left-Through		0							0				0				0	
	Through	848	2	**424**	0	848	**424**	14	901	2	**451**	0	901	2	**451**	0	901	2	**451**
	Through-Right		0							0				0				0	
	Right	112	1	27	0	112	27	1	118	1	27	0	118	1	27	0	118	1	27
	Left-Through-Right		0							0				0				0	
	Left-Right		0							0				0				0	
WESTBOUND	Left	115	1	**115**	0	115	**115**	0	120	1	**120**	0	120	1	**120**	0	120	1	**120**
	Left-Through		0							0				0				0	
	Through	889	2	445	0	889	445	15	945	2	473	0	945	2	473	0	945	2	473
	Through-Right		0							0				0				0	
	Right	107	1	107	0	107	107	0	112	1	112	0	112	1	112	0	112	1	112
	Left-Through-Right		0							0				0				0	
	Left-Right		0							0				0				0	
CRITICAL VOLUMES		*North-South:*		504	*North-South:*		514	*North-South:*			534	*North-South:*			544	*North-South:*			544
		East-West:		539	*East-West:*		539	*East-West:*			571	*East-West:*			571	*East-West:*			571
		SUM:		1043	*SUM:*		1053	*SUM:*			1105	*SUM:*			1115	*SUM:*			1115
VOLUME/CAPACITY *(V/C)* RATIO:				0.759			0.766				0.804				0.811				0.811
V/C LESS ATSAC/ATCS ADJUSTMENT:				**0.659**			**0.666**				**0.704**				**0.711**				**0.711**
LEVEL OF SERVICE (LOS):				**B**			**B**				**C**				**C**				**C**

REMARKS: Alt. Route 1: Concurrent Use of All Three Disposal Sites

Version: 1i Beta; 8/4/2011

PROJECT IMPACT

Change in *v/c* due to project:	0.007	Δ*v/c* after mitigation:	0.007
Significant impacted?	NO	Fully mitigated?	N/A

Level of Service Workheet
(Circular 212 Method)

I/S #:	North-South Street:	San Fernando Road	Year of Count:	2015	Ambient Growth: (%):	1.5	Conducted by:	City Traffic Counters	Date:	4/24/2015
CMA22	East-West Street:	Pierce Street	Projection Year:	2018	Peak Hour:	AM	Reviewed by:		Project:	Pacoima Reservoir Project/1-13-4

No. of Phases				4				4				4				4				4			4
Opposed Ø'ing: N/S-1, E/W-2 or Both-3?				2				2				2				2				2			2
Right Turns: FREE-1, NRTOR-2 or OLA-3?	NB--	0	SB--	0	NB--	0	SB--	0	NB--	0	SB--	0	NB--	0	SB--	0	NB--	0	SB--	0			
	EB--	0	WB--	2	EB--	0	WB--	2	EB--	0	WB--	2	EB--	0	WB--	2	EB--	0	WB--	2			
ATSAC-1 or ATSAC+ATCS-2?				2				2				2				2				2			2
Override Capacity				0				0				0				0				0			0

	MOVEMENT	EXISTING CONDITION			EXISTING PLUS PROJECT			FUTURE CONDITION W/O PROJECT				FUTURE CONDITION W/ PROJECT				FUTURE W/ PROJECT W/ MITIGATION			
		Volume	No. of Lanes	Lane Volume	Project Traffic	Total Volume	Lane Volume	Added Volume	Total Volume	No. of Lanes	Lane Volume	Added Volume	Total Volume	No. of Lanes	Lane Volume	Added Volume	Total Volume	No. of Lanes	Lane Volume
NORTHBOUND	Left	35	1	**35**	0	35	**35**	0	37	1	**37**	0	37	1	**37**	0	37	1	**37**
	Left-Through		0							0				0				0	
	Through	510	1	342	20	530	352	13	546	1	372	20	566	1	382	0	566	1	382
	Through-Right		1							1				1				1	
	Right	174	0	174	0	174	174	15	197	0	197	0	197	0	197	0	197	0	197
	Left-Through-Right		0							0				0				0	
	Left-Right		0							0				0				0	
SOUTHBOUND	Left	31	1	31	0	31	31	0	32	1	32	0	32	1	32	0	32	1	32
	Left-Through		0							0				0				0	
	Through	1135	2	**568**	20	1155	**578**	20	1207	2	**604**	20	1227	2	**614**	0	1227	2	**614**
	Through-Right		0							0				0				0	
	Right	90	1	55	0	90	55	0	94	1	58	0	94	1	58	0	94	1	58
	Left-Through-Right		0							0				0				0	
	Left-Right		0							0				0				0	
EASTBOUND	Left	70	0	70	0	70	70	0	73	0	73	0	73	0	73	0	73	0	73
	Left-Through		0							0				0				0	
	Through	137	0	**247**	0	137	**247**	23	166	0	**281**	0	166	0	**281**	0	166	0	**281**
	Through-Right		0							0				0				0	
	Right	40	0	0	0	40	0	0	42	0	0	0	42	0	0	0	42	0	0
	Left-Through-Right		1							1				1				1	
	Left-Right		0							0				0				0	
WESTBOUND	Left	196	0	196	0	196	196	13	218	0	218	0	218	0	218	0	218	0	218
	Left-Through		0							0				0				0	
	Through	137	0	**379**	0	137	**379**	19	162	0	**428**	0	162	0	**428**	0	162	0	**428**
	Through-Right		0							0				0				0	
	Right	46	0	0	0	46	0	0	48	0	0	0	48	0	0	0	48	0	0
	Left-Through-Right		1							1				1				1	
	Left-Right		0							0				0				0	
CRITICAL VOLUMES		*North-South:*		603	*North-South:*		613	*North-South:*			641	*North-South:*			651	*North-South:*			651
		East-West:		626	*East-West:*		626	*East-West:*			709	*East-West:*			709	*East-West:*			709
		SUM:		1229	*SUM:*		1239	*SUM:*			1350	*SUM:*			1360	*SUM:*			1360
VOLUME/CAPACITY *(V/C)* RATIO:				0.894			0.901				0.982				0.989				0.989
V/C LESS ATSAC/ATCS ADJUSTMENT:				**0.794**			**0.801**				**0.882**				**0.889**				**0.889**
LEVEL OF SERVICE (LOS):				**C**			**D**				**D**				**D**				**D**

REMARKS: Alt. Route 1: Concurrent Use of All Three Disposal Sites

Version: 1i Beta; 8/4/2011

PROJECT IMPACT

Change in *v/c* due to project:	0.007	Δ*v/c* after mitigation:	0.007
Significant impacted?	NO	Fully mitigated?	N/A

Level of Service Workheet
(Circular 212 Method)

I/S #:	North-South Street:	San Fernando Road	Year of Count:	2015	Ambient Growth: (%):	1.5	Conducted by:	City Traffic Counters	Date:	4/24/2015
CMA22	East-West Street:	Pierce Street	Projection Year:	2018	Peak Hour:	Mid-Day	Reviewed by:		Project:	Pacoima Reservoir Project/1-13-4

No. of Phases				4				4				4				4				4			4
Opposed Ø'ing: N/S-1, E/W-2 or Both-3?				2				2				2				2				2			2
Right Turns: FREE-1, NRTOR-2 or OLA-3?	NB--	0	SB--	0	NB--	0	SB--	0	NB--	0	SB--	0	NB--	0	SB--	0	NB--	0	SB--	0	NB--	0	SB--	0
	EB--	0	WB--	2	EB--	0	WB--	2	EB--	0	WB--	2	EB--	0	WB--	2	EB--	0	WB--	2	EB--	0	WB--	2
ATSAC-1 or ATSAC+ATCS-2?				2				2				2				2				2				2
Override Capacity				0				0				0				0				0				0

MOVEMENT		EXISTING CONDITION			EXISTING PLUS PROJECT			FUTURE CONDITION W/O PROJECT				FUTURE CONDITION W/ PROJECT				FUTURE W/ PROJECT W/ MITIGATION			
		Volume	No. of Lanes	Lane Volume	Project Traffic	Total Volume	Lane Volume	Added Volume	Total Volume	No. of Lanes	Lane Volume	Added Volume	Total Volume	No. of Lanes	Lane Volume	Added Volume	Total Volume	No. of Lanes	Lane Volume
NORTHBOUND	Left	24	1	24	0	24	24	0	25	1	25	0	25	1	25	0	25	1	25
	Left-Through		0							0				0				0	
	Through	506	1	**305**	20	526	**315**	10	539	1	**324**	20	559	1	**334**	0	559	1	**334**
	Through-Right		1							1				1				1	
	Right	103	0	103	0	103	103	0	108	0	108	0	108	0	108	0	108	0	108
	Left-Through-Right		0							0				0				0	
	Left-Right		0							0				0				0	
SOUTHBOUND	Left	35	1	**35**	0	35	**35**	0	37	1	**37**	0	37	1	**37**	0	37	1	**37**
	Left-Through		0							0				0				0	
	Through	549	2	275	20	569	285	7	581	2	291	20	601	2	301	0	601	2	301
	Through-Right		0							0				0				0	
	Right	88	1	59	0	88	59	0	92	1	62	0	92	1	62	0	92	1	62
	Left-Through-Right		0							0				0				0	
	Left-Right		0							0				0				0	
EASTBOUND	Left	58	0	58	0	58	58	0	61	0	61	0	61	0	61	0	61	0	61
	Left-Through		0							0				0				0	
	Through	75	0	**158**	0	75	**158**	0	78	0	**165**	0	78	0	**165**	0	78	0	**165**
	Through-Right		0							0				0				0	
	Right	25	0	0	0	25	0	0	26	0	0	0	26	0	0	0	26	0	0
	Left-Through-Right		1							1				1				1	
	Left-Right		0							0				0				0	
WESTBOUND	Left	80	0	80	0	80	80	0	84	0	84	0	84	0	84	0	84	0	84
	Left-Through		0							0				0				0	
	Through	50	0	**160**	0	50	**160**	0	52	0	**167**	0	52	0	**167**	0	52	0	**167**
	Through-Right		0							0				0				0	
	Right	30	0	0	0	30	0	0	31	0	0	0	31	0	0	0	31	0	0
	Left-Through-Right		1							1				1				1	
	Left-Right		0							0				0				0	
CRITICAL VOLUMES		*North-South:*		340	*North-South:*		350	*North-South:*			361	*North-South:*			371	*North-South:*			371
		East-West:		318	*East-West:*		318	*East-West:*			332	*East-West:*			332	*East-West:*			332
		SUM:		658	*SUM:*		668	*SUM:*			693	*SUM:*			703	*SUM:*			703
VOLUME/CAPACITY *(V/C)* RATIO:				0.479			0.486				0.504				0.511				0.511
V/C LESS ATSAC/ATCS ADJUSTMENT:				**0.379**			**0.386**				**0.404**				**0.411**				**0.411**
LEVEL OF SERVICE (LOS):				**A**			**A**				**A**				**A**				**A**

REMARKS: Alt. Route 1: Concurrent Use of All Three Disposal Sites

Version: 1i Beta; 8/4/2011

PROJECT IMPACT

Change in *v/c* due to project:	0.007	Δ*v/c* after mitigation:	0.007
Significant impacted?	NO	Fully mitigated?	N/A

Level of Service Workheet
(Circular 212 Method)

I/S #:	North-South Street:	San Fernando Road	Year of Count:	2015	Ambient Growth: (%):	1.5	Conducted by:	City Traffic Counters	Date:	4/24/2015
CMA22	East-West Street:	Pierce Street	Projection Year:	2018	Peak Hour:	PM	Reviewed by:		Project:	Pacoima Reservoir Project/1-13-4

No. of Phases				4				4				4				4				4			4
Opposed Ø'ing: N/S-1, E/W-2 or Both-3?				2				2				2				2				2			2
Right Turns: FREE-1, NRTOR-2 or OLA-3?	NB--	0	SB--	0	NB--	0	SB--	0	NB--	0	SB--	0	NB--	0	SB--	0	NB--	0	SB--	0	NB--	0	SB--	0
	EB--	0	WB--	2	EB--	0	WB--	2	EB--	0	WB--	2	EB--	0	WB--	2	EB--	0	WB--	2	EB--	0	WB--	2
ATSAC-1 or ATSAC+ATCS-2?				2				2				2				2				2				2
Override Capacity				0				0				0				0				0				0

MOVEMENT		EXISTING CONDITION			EXISTING PLUS PROJECT			FUTURE CONDITION W/O PROJECT				FUTURE CONDITION W/ PROJECT				FUTURE W/ PROJECT W/ MITIGATION			
		Volume	No. of Lanes	Lane Volume	Project Traffic	Total Volume	Lane Volume	Added Volume	Total Volume	No. of Lanes	Lane Volume	Added Volume	Total Volume	No. of Lanes	Lane Volume	Added Volume	Total Volume	No. of Lanes	Lane Volume
NORTHBOUND	Left	45	1	45	0	45	45	0	47	1	47	0	47	1	47	0	47	1	47
	Left-Through		0							0				0				0	
	Through	772	1	**482**	20	792	**492**	15	822	1	**516**	20	842	1	**526**	0	842	1	**526**
	Through-Right		1							1				1				1	
	Right	191	0	191	0	191	191	9	209	0	209	0	209	0	209	0	209	0	209
	Left-Through-Right		0							0				0				0	
	Left-Right		0							0				0				0	
SOUTHBOUND	Left	43	1	**43**	0	43	**43**	0	45	1	**45**	0	45	1	**45**	0	45	1	**45**
	Left-Through		0							0				0				0	
	Through	658	2	329	20	678	339	10	698	2	349	20	718	2	359	0	718	2	359
	Through-Right		0							0				0				0	
	Right	100	1	67	0	100	67	0	105	1	71	0	105	1	71	0	105	1	71
	Left-Through-Right		0							0				0				0	
	Left-Right		0							0				0				0	
EASTBOUND	Left	66	0	66	0	66	66	0	69	0	69	0	69	0	69	0	69	0	69
	Left-Through		0							0				0				0	
	Through	129	0	**239**	0	129	**239**	13	148	0	**263**	0	148	0	**263**	0	148	0	**263**
	Through-Right		0							0				0				0	
	Right	44	0	0	0	44	0	0	46	0	0	0	46	0	0	0	46	0	0
	Left-Through-Right		1							1				1				1	
	Left-Right		0							0				0				0	
WESTBOUND	Left	138	0	138	0	138	138	10	154	0	154	0	154	0	154	0	154	0	154
	Left-Through		0							0				0				0	
	Through	120	0	**314**	0	120	**314**	14	139	0	**352**	0	139	0	**352**	0	139	0	**352**
	Through-Right		0							0				0				0	
	Right	56	0	0	0	56	0	0	59	0	0	0	59	0	0	0	59	0	0
	Left-Through-Right		1							1				1				1	
	Left-Right		0							0				0				0	
CRITICAL VOLUMES			*North-South:*	525		*North-South:*	535		*North-South:*	561			*North-South:*	571			*North-South:*	571	
			East-West:	553		*East-West:*	553		*East-West:*	615			*East-West:*	615			*East-West:*	615	
			SUM:	1078		*SUM:*	1088		*SUM:*	1176			*SUM:*	1186			*SUM:*	1186	
VOLUME/CAPACITY *(V/C)* RATIO:				0.784			0.791				0.855				0.863				0.863
V/C LESS ATSAC/ATCS ADJUSTMENT:				**0.684**			**0.691**				**0.755**				**0.763**				**0.763**
LEVEL OF SERVICE (LOS):				**B**			**B**				**C**				**C**				**C**

REMARKS: Alt. Route 1: Concurrent Use of All Three Disposal Sites

Version: 1i Beta; 8/4/2011

PROJECT IMPACT

Change in *v/c* due to project:	0.008	Δ*v/c* after mitigation:	0.008
Significant impacted?	NO	Fully mitigated?	N/A

Level of Service Workheet
(Circular 212 Method)

I/S #:	North-South Street:	San Fernando Road	Year of Count:	2015	Ambient Growth: (%):	1.5	Conducted by:	City Traffic Counters	Date:	4/24/2015
CMA23	East-West Street:	Terra Bella Street	Projection Year:	2018	Peak Hour:	AM	Reviewed by:		Project:	Pacoima Reservoir Project/1-13-4

No. of Phases				2				2				2				2				2			
Opposed Ø'ing: N/S-1, E/W-2 or Both-3?				0				0				0				0				0			
Right Turns: FREE-1, NRTOR-2 or OLA-3?	NB--	0	SB--	0	NB--	0	SB--	0	NB--	0	SB--	0	NB--	0	SB--	0	NB--	0	SB--	0			
	EB--	0	WB--	0	EB--	0	WB--	0	EB--	0	WB--	0	EB--	0	WB--	0	EB--	0	WB--	0			
ATSAC-1 or ATSAC+ATCS-2?				2				2				2				2				2			
Override Capacity				0				0				0				0				0			

	MOVEMENT	EXISTING CONDITION			EXISTING PLUS PROJECT			FUTURE CONDITION W/O PROJECT				FUTURE CONDITION W/ PROJECT				FUTURE W/ PROJECT W/ MITIGATION			
		Volume	No. of Lanes	Lane Volume	Project Traffic	Total Volume	Lane Volume	Added Volume	Total Volume	No. of Lanes	Lane Volume	Added Volume	Total Volume	No. of Lanes	Lane Volume	Added Volume	Total Volume	No. of Lanes	Lane Volume
NORTHBOUND	Left	54	1	**54**	0	54	**54**	0	56	1	**56**	0	56	1	**56**	0	56	1	**56**
	Left-Through		0							0				0				0	
	Through	485	2	243	20	505	253	14	521	2	261	20	541	2	271	0	541	2	271
	Through-Right		0							0				0				0	
	Right	0	0	0	0	0	0	0	0	0	0	0	0	0	0	0	0	0	0
	Left-Through-Right		0							0				0				0	
	Left-Right		0							0				0				0	
SOUTHBOUND	Left	0	0	0	0	0	0	0	0	0	0	0	0	0	0	0	0	0	0
	Left-Through		0							0				0				0	
	Through	1224	1	**717**	20	1244	**727**	15	1295	1	**766**	20	1315	1	**776**	0	1315	1	**776**
	Through-Right		1							1				1				1	
	Right	210	0	210	0	210	210	17	237	0	237	0	237	0	237	0	237	0	237
	Left-Through-Right		0							0				0				0	
	Left-Right		0							0				0				0	
EASTBOUND	Left	239	1	**239**	0	239	**239**	15	265	1	**265**	0	265	1	**265**	0	265	1	**265**
	Left-Through		0							0				0				0	
	Through	0	0	0	0	0	0	0	0	0	0	0	0	0	0	0	0	0	0
	Through-Right		0							0				0				0	
	Right	116	1	89	0	116	89	0	121	1	93	0	121	1	93	0	121	1	93
	Left-Through-Right		0							0				0				0	
	Left-Right		0							0				0				0	
WESTBOUND	Left	0	0	0	0	0	0	0	0	0	0	0	0	0	0	0	0	0	0
	Left-Through		0							0				0				0	
	Through	0	0	**0**	0	0	**0**	0	0	0	**0**	0	0	0	**0**	0	0	0	**0**
	Through-Right		0							0				0				0	
	Right	0	0	0	0	0	0	0	0	0	0	0	0	0	0	0	0	0	0
	Left-Through-Right		0							0				0				0	
	Left-Right		0							0				0				0	
CRITICAL VOLUMES		*North-South:*		771	*North-South:*		781	*North-South:*			822	*North-South:*			832	*North-South:*			832
		East-West:		239	*East-West:*		239	*East-West:*			265	*East-West:*			265	*East-West:*			265
		SUM:		1010	*SUM:*		1020	*SUM:*			1087	*SUM:*			1097	*SUM:*			1097
VOLUME/CAPACITY *(V/C)* RATIO:				0.673			0.680				0.725				0.731				0.731
V/C LESS ATSAC/ATCS ADJUSTMENT:				**0.573**			**0.580**				**0.625**				**0.631**				**0.631**
LEVEL OF SERVICE (LOS):				**A**			**A**				**B**				**B**				**B**

REMARKS: Alt. Route 1: Concurrent Use of All Three Disposal Sites

Version: 1i Beta; 8/4/2011

PROJECT IMPACT

Change in *v/c* due to project:	0.006	Δ*v/c* after mitigation:	0.006
Significant impacted?	NO	Fully mitigated?	N/A

Level of Service Workheet
(Circular 212 Method)

I/S #:	North-South Street:	San Fernando Road	Year of Count:	2015	Ambient Growth: (%):	1.5	Conducted by:	City Traffic Counters	Date:	4/24/2015
CMA23	East-West Street:	Terra Bella Street	Projection Year:	2018	Peak Hour:	Mid-Day	Reviewed by:		Project:	Pacoima Reservoir Project/1-13-4

No. of Phases				2				2				2				2				2			
Opposed Ø'ing: N/S-1, E/W-2 or Both-3?				0				0				0				0				0			
Right Turns: FREE-1, NRTOR-2 or OLA-3?	NB--	0	SB--	0	NB--	0	SB--	0	NB--	0	SB--	0	NB--	0	SB--	0	NB--	0	SB--	0			
	EB--	0	WB--	0	EB--	0	WB--	0	EB--	0	WB--	0	EB--	0	WB--	0	EB--	0	WB--	0			
ATSAC-1 or ATSAC+ATCS-2?				2				2				2				2				2			
Override Capacity				0				0				0				0				0			

	MOVEMENT	EXISTING CONDITION			EXISTING PLUS PROJECT			FUTURE CONDITION W/O PROJECT				FUTURE CONDITION W/ PROJECT				FUTURE W/ PROJECT W/ MITIGATION			
		Volume	No. of Lanes	Lane Volume	Project Traffic	Total Volume	Lane Volume	Added Volume	Total Volume	No. of Lanes	Lane Volume	Added Volume	Total Volume	No. of Lanes	Lane Volume	Added Volume	Total Volume	No. of Lanes	Lane Volume
NORTHBOUND	Left	64	1	**64**	0	64	**64**	0	67	1	**67**	0	67	1	**67**	0	67	1	**67**
	Left-Through		0							0				0				0	
	Through	481	2	241	20	501	251	10	513	2	257	20	533	2	267	0	533	2	267
	Through-Right		0							0				0				0	
	Right	0	0	0	0	0	0	0	0	0	0	0	0	0	0	0	0	0	0
	Left-Through-Right		0							0				0				0	
	Left-Right		0							0				0				0	
SOUTHBOUND	Left	0	0	0	0	0	0	0	0	0	0	0	0	0	0	0	0	0	0
	Left-Through		0							0				0				0	
	Through	547	1	**332**	20	567	**342**	7	579	1	**350**	20	599	1	**360**	0	599	1	**360**
	Through-Right		1							1				1				1	
	Right	116	0	116	0	116	116	0	121	0	121	0	121	0	121	0	121	0	121
	Left-Through-Right		0							0				0				0	
	Left-Right		0							0				0				0	
EASTBOUND	Left	126	1	**126**	0	126	**126**	0	132	1	**132**	0	132	1	**132**	0	132	1	**132**
	Left-Through		0							0				0				0	
	Through	0	0	0	0	0	0	0	0	0	0	0	0	0	0	0	0	0	0
	Through-Right		0							0				0				0	
	Right	74	1	42	0	74	42	0	77	1	44	0	77	1	44	0	77	1	44
	Left-Through-Right		0							0				0				0	
	Left-Right		0							0				0				0	
WESTBOUND	Left	0	0	0	0	0	0	0	0	0	0	0	0	0	0	0	0	0	0
	Left-Through		0							0				0				0	
	Through	0	0	**0**	0	0	**0**	0	0	0	**0**	0	0	0	**0**	0	0	0	**0**
	Through-Right		0							0				0				0	
	Right	0	0	0	0	0	0	0	0	0	0	0	0	0	0	0	0	0	0
	Left-Through-Right		0							0				0				0	
	Left-Right		0							0				0				0	
CRITICAL VOLUMES		*North-South:*		396	*North-South:*		406	*North-South:*			417	*North-South:*			427	*North-South:*			427
		East-West:		126	*East-West:*		126	*East-West:*			132	*East-West:*			132	*East-West:*			132
		SUM:		522	*SUM:*		532	*SUM:*			549	*SUM:*			559	*SUM:*			559
VOLUME/CAPACITY *(V/C)* RATIO:				0.348			0.355				0.366				0.373				0.373
V/C LESS ATSAC/ATCS ADJUSTMENT:				**0.248**			**0.255**				**0.266**				**0.273**				**0.273**
LEVEL OF SERVICE (LOS):				**A**			**A**				**A**				**A**				**A**

REMARKS: Alt. Route 1: Concurrent Use of All Three Disposal Sites

Version: 1i Beta; 8/4/2011

PROJECT IMPACT

Change in *v/c* due to project:	0.007	Δ*v/c* after mitigation:	0.007
Significant impacted?	NO	Fully mitigated?	N/A

Level of Service Workheet
(Circular 212 Method)

I/S #:	North-South Street:	San Fernando Road	Year of Count:	2015	Ambient Growth: (%):	1.5	Conducted by:	City Traffic Counters	Date:	4/24/2015
CMA23	East-West Street:	Terra Bella Street	Projection Year:	2018	Peak Hour:	PM	Reviewed by:		Project:	Pacoima Reservoir Project/1-13-4

No. of Phases				2				2				2				2				2			
Opposed Ø'ing: N/S-1, E/W-2 or Both-3?				0				0				0				0				0			
Right Turns: FREE-1, NRTOR-2 or OLA-3?	NB--	0	SB--	0	NB--	0	SB--	0	NB--	0	SB--	0	NB--	0	SB--	0	NB--	0	SB--	0			
	EB--	0	WB--	0	EB--	0	WB--	0	EB--	0	WB--	0	EB--	0	WB--	0	EB--	0	WB--	0			
ATSAC-1 or ATSAC+ATCS-2?				2				2				2				2				2			
Override Capacity				0				0				0				0				0			

	MOVEMENT	EXISTING CONDITION			EXISTING PLUS PROJECT			FUTURE CONDITION W/O PROJECT				FUTURE CONDITION W/ PROJECT				FUTURE W/ PROJECT W/ MITIGATION			
		Volume	No. of Lanes	Lane Volume	Project Traffic	Total Volume	Lane Volume	Added Volume	Total Volume	No. of Lanes	Lane Volume	Added Volume	Total Volume	No. of Lanes	Lane Volume	Added Volume	Total Volume	No. of Lanes	Lane Volume
NORTHBOUND	Left	111	1	**111**	0	111	**111**	0	116	1	**116**	0	116	1	**116**	0	116	1	**116**
	Left-Through		0							0				0				0	
	Through	807	2	404	20	827	414	14	858	2	429	20	878	2	439	0	878	2	439
	Through-Right		0							0				0				0	
	Right	1	0	0	0	1	0	0	1	0	0	0	1	0	0	0	1	0	0
	Left-Through-Right		0							0				0				0	
	Left-Right		0							0				0				0	
SOUTHBOUND	Left	0	0	0	0	0	0	0	0	0	0	0	0	0	0	0	0	0	0
	Left-Through		0							0				0				0	
	Through	677	1	**429**	20	697	**439**	12	720	1	**458**	20	740	1	**468**	0	740	1	**468**
	Through-Right		1							1				1				1	
	Right	180	0	180	0	180	180	8	196	0	196	0	196	0	196	0	196	0	196
	Left-Through-Right		0							0				0				0	
	Left-Right		0							0				0				0	
EASTBOUND	Left	220	1	**220**	0	220	**220**	9	239	1	**239**	0	239	1	**239**	0	239	1	**239**
	Left-Through		0							0				0				0	
	Through	0	0	0	0	0	0	0	0	0	0	0	0	0	0	0	0	0	0
	Through-Right		0							0				0				0	
	Right	117	1	62	0	117	62	0	122	1	64	0	122	1	64	0	122	1	64
	Left-Through-Right		0							0				0				0	
	Left-Right		0							0				0				0	
WESTBOUND	Left	0	0	0	0	0	0	0	0	0	0	0	0	0	0	0	0	0	0
	Left-Through		0							0				0				0	
	Through	0	0	**0**	0	0	**0**	0	0	0	**0**	0	0	0	**0**	0	0	0	**0**
	Through-Right		0							0				0				0	
	Right	0	0	0	0	0	0	0	0	0	0	0	0	0	0	0	0	0	0
	Left-Through-Right		0							0				0				0	
	Left-Right		0							0				0				0	
CRITICAL VOLUMES		*North-South:*		540	*North-South:*		550	*North-South:*			574	*North-South:*			584	*North-South:*			584
		East-West:		220	*East-West:*		220	*East-West:*			239	*East-West:*			239	*East-West:*			239
		SUM:		760	*SUM:*		770	*SUM:*			813	*SUM:*			823	*SUM:*			823
VOLUME/CAPACITY *(V/C)* RATIO:				0.507			0.513				0.542				0.549				0.549
V/C LESS ATSAC/ATCS ADJUSTMENT:				**0.407**			**0.413**				**0.442**				**0.449**				**0.449**
LEVEL OF SERVICE (LOS):				**A**			**A**				**A**				**A**				**A**

REMARKS: Alt. Route 1: Concurrent Use of All Three Disposal Sites

Version: 1i Beta; 8/4/2011

PROJECT IMPACT

Change in *v/c* due to project:	0.007	Δ*v/c* after mitigation:	0.007
Significant impacted?	NO	Fully mitigated?	N/A

Level of Service Workheet
(Circular 212 Method)

I/S #:	North-South Street:	San Fernando Road	Year of Count:	2015	Ambient Growth: (%):	1.5	Conducted by:	City Traffic Counters	Date:	4/24/2015
CMA24	East-West Street:	Osborne Street	Projection Year:	2018	Peak Hour:	AM	Reviewed by:		Project:	Pacoima Reservoir Project/1-13-4

No. of Phases				4				4				4				4				4		
Opposed Ø'ing: N/S-1, E/W-2 or Both-3?				2				2				2				2				2		
Right Turns: FREE-1, NRTOR-2 or OLA-3?	NB--	0	SB--	0	NB--	0	SB--	0	NB--	0	SB--	0	NB--	0	SB--	0	NB--	0	SB--	0		
	EB--	0	WB--	2	EB--	0	WB--	2	EB--	0	WB--	2	EB--	0	WB--	2	EB--	0	WB--	2		
ATSAC-1 or ATSAC+ATCS-2?				2				2				2				2				2		
Override Capacity				0				0				0				0				0		

MOVEMENT		EXISTING CONDITION			EXISTING PLUS PROJECT			FUTURE CONDITION W/O PROJECT				FUTURE CONDITION W/ PROJECT				FUTURE W/ PROJECT W/ MITIGATION			
		Volume	No. of Lanes	Lane Volume	Project Traffic	Total Volume	Lane Volume	Added Volume	Total Volume	No. of Lanes	Lane Volume	Added Volume	Total Volume	No. of Lanes	Lane Volume	Added Volume	Total Volume	No. of Lanes	Lane Volume
NORTHBOUND	Left	28	1	**28**	0	28	**28**	0	29	1	**29**	0	29	1	**29**	0	29	1	**29**
	Left-Through		0							0				0				0	
	Through	324	1	196	20	344	206	4	343	1	207	20	363	1	217	0	363	1	217
	Through-Right		1							1				1				1	
	Right	68	0	68	0	68	68	0	71	0	71	0	71	0	71	0	71	0	71
	Left-Through-Right		0							0				0				0	
	Left-Right		0							0				0				0	
SOUTHBOUND	Left	110	1	110	0	110	110	1	116	1	116	0	116	1	116	0	116	1	116
	Left-Through		0							0				0				0	
	Through	875	1	**471**	20	895	**481**	8	923	1	**500**	20	943	1	**510**	0	943	1	**510**
	Through-Right		1							1				1				1	
	Right	67	0	67	0	67	67	6	76	0	76	0	76	0	76	0	76	0	76
	Left-Through-Right		0							0				0				0	
	Left-Right		0							0				0				0	
EASTBOUND	Left	78	1	78	0	78	78	8	90	1	90	0	90	1	90	0	90	1	90
	Left-Through		0							0				0				0	
	Through	587	1	**318**	0	587	**318**	7	621	1	**336**	0	621	1	**336**	0	621	1	**336**
	Through-Right		1							1				1				1	
	Right	48	0	48	0	48	48	0	50	0	50	0	50	0	50	0	50	0	50
	Left-Through-Right		0							0				0				0	
	Left-Right		0							0				0				0	
WESTBOUND	Left	82	1	82	0	82	82	0	86	1	86	0	86	1	86	0	86	1	86
	Left-Through		0							0				0				0	
	Through	764	1	**431**	0	764	**431**	11	810	1	**457**	0	810	1	**457**	0	810	1	**457**
	Through-Right		1							1				1				1	
	Right	98	0	98	0	98	98	2	104	0	104	0	104	0	104	0	104	0	104
	Left-Through-Right		0							0				0				0	
	Left-Right		0							0				0				0	
CRITICAL VOLUMES			*North-South:*	499		*North-South:*	509			*North-South:*	529			*North-South:*	539			*North-South:*	539
			East-West:	749		*East-West:*	749			*East-West:*	793			*East-West:*	793			*East-West:*	793
			SUM:	1248		*SUM:*	1258			*SUM:*	1322			*SUM:*	1332			*SUM:*	1332
VOLUME/CAPACITY *(V/C)* RATIO:				0.908			0.915				0.961				0.969				0.969
V/C LESS ATSAC/ATCS ADJUSTMENT:				**0.808**			**0.815**				**0.861**				**0.869**				**0.869**
LEVEL OF SERVICE (LOS):				**D**			**D**				**D**				**D**				**D**

REMARKS: Alt. Route 1: Concurrent Use of All Three Disposal Sites

Version: 1i Beta; 8/4/2011

PROJECT IMPACT

Change in *v/c* due to project:	0.008	Δ*v/c* after mitigation:	0.008
Significant impacted?	NO	Fully mitigated?	N/A

Level of Service Workheet
(Circular 212 Method)

I/S #:	North-South Street:	San Fernando Road	Year of Count:	2015	Ambient Growth: (%):	1.5	Conducted by:	City Traffic Counters	Date:	4/24/2015
CMA24	East-West Street:	Osborne Street	Projection Year:	2018	Peak Hour:	Mid-Day	Reviewed by:		Project:	Pacoima Reservoir Project/1-13-4

	Existing Condition	Existing Plus Project	Future Condition W/O Project	Future Condition W/ Project	Future W/ Project W/ Mitigation
No. of Phases	4	4	4	4	4
Opposed Ø'ing: N/S-1, E/W-2 or Both-3?	2	2	2	2	2
Right Turns: FREE-1, NRTOR-2 or OLA-3?	NB-- 0 SB-- 0 EB-- 0 WB-- 2	NB-- 0 SB-- 0 EB-- 0 WB-- 2	NB-- 0 SB-- 0 EB-- 0 WB-- 2	NB-- 0 SB-- 0 EB-- 0 WB-- 2	NB-- 0 SB-- 0 EB-- 0 WB-- 2
ATSAC-1 or ATSAC+ATCS-2?	2	2	2	2	2
Override Capacity	0	0	0	0	0

	MOVEMENT	Existing Condition Volume	No. of Lanes	Lane Volume	Existing Plus Project Project Traffic	Total Volume	Lane Volume	Future Condition W/O Project Added Volume	Total Volume	No. of Lanes	Lane Volume	Future Condition W/ Project Added Volume	Total Volume	No. of Lanes	Lane Volume	Future W/ Project W/ Mitigation Added Volume	Total Volume	No. of Lanes	Lane Volume
NORTHBOUND	Left	58	1	58	0	58	58	0	61	1	61	0	61	1	61	0	61	1	61
	Left-Through		0							0				0				0	
	Through	337	1	**190**	20	357	**200**	8	360	1	**202**	20	380	1	**212**	0	380	1	**212**
	Through-Right		1							1				1				1	
	Right	42	0	42	0	42	42	0	44	0	44	0	44	0	44	0	44	0	44
	Left-Through-Right		0							0				0				0	
	Left-Right		0							0				0				0	
SOUTHBOUND	Left	167	1	**167**	0	167	**167**	1	176	1	**176**	0	176	1	**176**	0	176	1	**176**
	Left-Through		0							0				0				0	
	Through	448	1	255	20	468	265	6	474	1	269	20	494	1	279	0	494	1	279
	Through-Right		1							1				1				1	
	Right	61	0	61	0	61	61	0	64	0	64	0	64	0	64	0	64	0	64
	Left-Through-Right		0							0				0				0	
	Left-Right		0							0				0				0	
EASTBOUND	Left	75	1	75	0	75	75	0	78	1	78	0	78	1	78	0	78	1	78
	Left-Through		0							0				0				0	
	Through	547	1	**296**	0	547	**296**	0	572	1	**310**	0	572	1	**310**	0	572	1	**310**
	Through-Right		1							1				1				1	
	Right	45	0	45	0	45	45	0	47	0	47	0	47	0	47	0	47	0	47
	Left-Through-Right		0							0				0				0	
	Left-Right		0							0				0				0	
WESTBOUND	Left	45	1	45	0	45	45	0	47	1	47	0	47	1	47	0	47	1	47
	Left-Through		0							0				0				0	
	Through	521	1	**318**	0	521	**318**	0	545	1	**333**	0	545	1	**333**	0	545	1	**333**
	Through-Right		1							1				1				1	
	Right	114	0	114	0	114	114	1	120	0	120	0	120	0	120	0	120	0	120
	Left-Through-Right		0							0				0				0	
	Left-Right		0							0				0				0	
	CRITICAL VOLUMES	North-South:		357	North-South:		367	North-South:			378	North-South:			388	North-South:			388
		East-West:		614	East-West:		614	East-West:			643	East-West:			643	East-West:			643
		SUM:		971	SUM:		981	SUM:			1021	SUM:			1031	SUM:			1031
	VOLUME/CAPACITY (V/C) RATIO:			0.706			0.713				0.743				0.750				0.750
	V/C LESS ATSAC/ATCS ADJUSTMENT:			**0.606**			**0.613**				**0.643**				**0.650**				**0.650**
	LEVEL OF SERVICE (LOS):			**B**			**B**				**B**				**B**				**B**

REMARKS: Alt. Route 1: Concurrent Use of All Three Disposal Sites

Version: 1i Beta; 8/4/2011

PROJECT IMPACT

Change in *v/c* due to project:	0.007	Δ*v/c* after mitigation:	0.007
Significant impacted?	NO	Fully mitigated?	N/A

Level of Service Workheet
(Circular 212 Method)

I/S #:	North-South Street:	San Fernando Road	Year of Count:	2015	Ambient Growth: (%):	1.5	Conducted by:	City Traffic Counters	Date:	4/24/2015
CMA24	East-West Street:	Osborne Street	Projection Year:	2018	Peak Hour:	PM	Reviewed by:		Project:	Pacoima Reservoir Project/1-13-4

No. of Phases				4				4				4				4				4			
Opposed Ø'ing: N/S-1, E/W-2 or Both-3?				2				2				2				2				2			
Right Turns: FREE-1, NRTOR-2 or OLA-3?	NB--	0	SB--	0	NB--	0	SB--	0	NB--	0	SB--	0	NB--	0	SB--	0	NB--	0	SB--	0			
	EB--	0	WB--	2	EB--	0	WB--	2	EB--	0	WB--	2	EB--	0	WB--	2	EB--	0	WB--	2			
ATSAC-1 or ATSAC+ATCS-2?				2				2				2				2				2			
Override Capacity				0				0				0				0				0			

MOVEMENT		EXISTING CONDITION			EXISTING PLUS PROJECT			FUTURE CONDITION W/O PROJECT				FUTURE CONDITION W/ PROJECT				FUTURE W/ PROJECT W/ MITIGATION			
		Volume	No. of Lanes	Lane Volume	Project Traffic	Total Volume	Lane Volume	Added Volume	Total Volume	No. of Lanes	Lane Volume	Added Volume	Total Volume	No. of Lanes	Lane Volume	Added Volume	Total Volume	No. of Lanes	Lane Volume
NORTHBOUND	Left	74	1	74	0	74	74	0	77	1	77	0	77	1	77	0	77	1	77
	Left-Through		0							0				0				0	
	Through	546	1	**313**	20	566	**323**	8	579	1	**331**	20	599	1	**341**	0	599	1	**341**
	Through-Right		1							1				1				1	
	Right	79	0	79	0	79	79	0	83	0	83	0	83	0	83	0	83	0	83
	Left-Through-Right		0							0				0				0	
	Left-Right		0							0				0				0	
SOUTHBOUND	Left	179	1	**179**	0	179	**179**	1	188	1	**188**	0	188	1	**188**	0	188	1	**188**
	Left-Through		0							0				0				0	
	Through	457	1	261	20	477	271	6	484	1	278	20	504	1	288	0	504	1	288
	Through-Right		1							1				1				1	
	Right	64	0	64	0	64	64	5	72	0	72	0	72	0	72	0	72	0	72
	Left-Through-Right		0							0				0				0	
	Left-Right		0							0				0				0	
EASTBOUND	Left	101	1	101	0	101	101	4	110	1	110	0	110	1	110	0	110	1	110
	Left-Through		0							0				0				0	
	Through	652	1	**348**	0	652	**348**	5	687	1	**367**	0	687	1	**367**	0	687	1	**367**
	Through-Right		1							1				1				1	
	Right	44	0	44	0	44	44	0	46	0	46	0	46	0	46	0	46	0	46
	Left-Through-Right		0							0				0				0	
	Left-Right		0							0				0				0	
WESTBOUND	Left	54	1	54	0	54	54	0	56	1	56	0	56	1	56	0	56	1	56
	Left-Through		0							0				0				0	
	Through	698	1	**418**	0	698	**418**	3	733	1	**439**	0	733	1	**439**	0	733	1	**439**
	Through-Right		1							1				1				1	
	Right	137	0	137	0	137	137	1	144	0	144	0	144	0	144	0	144	0	144
	Left-Through-Right		0							0				0				0	
	Left-Right		0							0				0				0	
CRITICAL VOLUMES		*North-South:*		492	*North-South:*		502	*North-South:*			519	*North-South:*			529	*North-South:*			529
		East-West:		766	*East-West:*		766	*East-West:*			806	*East-West:*			806	*East-West:*			806
		SUM:		1258	*SUM:*		1268	*SUM:*			1325	*SUM:*			1335	*SUM:*			1335
VOLUME/CAPACITY *(V/C)* RATIO:				0.915			0.922				0.964				0.971				0.971
V/C LESS ATSAC/ATCS ADJUSTMENT:				**0.815**			**0.822**				**0.864**				**0.871**				**0.871**
LEVEL OF SERVICE (LOS):				**D**			**D**				**D**				**D**				**D**

REMARKS: Alt. Route 1: Concurrent Use of All Three Disposal Sites

Version: 1i Beta; 8/4/2011

PROJECT IMPACT

Change in *v/c* due to project:	0.007	Δ*v/c* after mitigation:	0.007
Significant impacted?	NO	Fully mitigated?	N/A

Level of Service Workheet
(Circular 212 Method)

I/S #:	North-South Street:	Arleta Avenue	Year of Count:	2015	Ambient Growth: (%):	1.5	Conducted by:	City Traffic Counters	Date:	4/28/2015
CMA1	East-West Street:	Devonshire Street	Projection Year:	2018	Peak Hour:	AM	Reviewed by:		Project:	Pacoima Reservoir Project/1-13-4

No. of Phases				3				3				3				3				3			3
Opposed Ø'ing: N/S-1, E/W-2 or Both-3?				0				0				0				0				0			0
Right Turns: FREE-1, NRTOR-2 or OLA-3?	NB--	0	SB--	3	NB--	0	SB--	3	NB--	0	SB--	3	NB--	0	SB--	3	NB--	0	SB--	3	NB--	0	SB-- 3
	EB--	0	WB--	0	EB--	0	WB--	0	EB--	0	WB--	0	EB--	0	WB--	0	EB--	0	WB--	0	EB--	0	WB-- 0
ATSAC-1 or ATSAC+ATCS-2?				2				2				2				2				2			2
Override Capacity				0				0				0				0				0			0

	MOVEMENT	EXISTING CONDITION			EXISTING PLUS PROJECT			FUTURE CONDITION W/O PROJECT				FUTURE CONDITION W/ PROJECT				FUTURE W/ PROJECT W/ MITIGATION			
		Volume	No. of Lanes	Lane Volume	Project Traffic	Total Volume	Lane Volume	Added Volume	Total Volume	No. of Lanes	Lane Volume	Added Volume	Total Volume	No. of Lanes	Lane Volume	Added Volume	Total Volume	No. of Lanes	Lane Volume
NORTHBOUND	Left	0	0	0	0	0	0	0	0	0	0	0	0	0	0	0	0	0	0
	Left-Through		0							0				0				0	
	Through	0	0	**0**	0	0	**0**	0	0	0	**0**	0	0	0	**0**	0	0	0	**0**
	Through-Right		0							0				0				0	
	Right	0	0	0	0	0	0	0	0	0	0	0	0	0	0	0	0	0	0
	Left-Through-Right		0							0				0				0	
	Left-Right		0							0				0				0	
SOUTHBOUND	Left	557	1	**318**	0	557	**335**	0	582	1	**333**	0	582	1	**349**	0	582	1	**349**
	Left-Through		0							0				0				0	
	Through	0	0	0	0	0	0	0	0	0	0	0	0	0	0	0	0	0	0
	Through-Right		0							0				0				0	
	Right	398	1	0	50	448	0	0	416	1	0	50	466	1	0	0	466	1	0
	Left-Through-Right		0							0				0				0	
	Left-Right		1							1				1				1	
EASTBOUND	Left	331	1	**331**	50	381	**381**	0	346	1	**346**	50	396	1	**396**	0	396	1	**396**
	Left-Through		0							0				0				0	
	Through	994	2	497	1	995	498	6	1045	2	523	1	1046	2	523	0	1046	2	523
	Through-Right		0							0				0				0	
	Right	0	0	0	0	0	0	0	0	0	0	0	0	0	0	0	0	0	0
	Left-Through-Right		0							0				0				0	
	Left-Right		0							0				0				0	
WESTBOUND	Left	0	0	0	0	0	0	0	0	0	0	0	0	0	0	0	0	0	0
	Left-Through		0							0				0				0	
	Through	592	2	**296**	1	593	**297**	6	625	2	**313**	1	626	2	**313**	0	626	2	**313**
	Through-Right		0							0				0				0	
	Right	260	1	101	0	260	93	0	272	1	106	0	272	1	98	0	272	1	98
	Left-Through-Right		0							0				0				0	
	Left-Right		0							0				0				0	
CRITICAL VOLUMES		*North-South:*		318	*North-South:*		335	*North-South:*			333	*North-South:*			349	*North-South:*			349
		East-West:		627	*East-West:*		678	*East-West:*			659	*East-West:*			709	*East-West:*			709
		SUM:		945	*SUM:*		1013	*SUM:*			992	*SUM:*			1058	*SUM:*			1058
VOLUME/CAPACITY *(V/C)* RATIO:				0.663			0.711				0.696				0.742				0.742
V/C LESS ATSAC/ATCS ADJUSTMENT:				**0.563**			**0.611**				**0.596**				**0.642**				**0.642**
LEVEL OF SERVICE (LOS):				**A**			**B**				**A**				**B**				**B**

REMARKS: Alt. Route 2: Using only Boulevard Pit

Version: 1i Beta; 8/4/2011

PROJECT IMPACT

Change in *v/c* due to project:	0.046	Δ*v/c* after mitigation:	0.046
Significant impacted?	NO	Fully mitigated?	N/A

Level of Service Workheet
(Circular 212 Method)

I/S #:	North-South Street:	Arleta Avenue	Year of Count:	2015	Ambient Growth: (%):	1.5	Conducted by:	City Traffic Counters	Date:	4/28/2015
CMA1	East-West Street:	Devonshire Street	Projection Year:	2018	Peak Hour:	Mid-Day	Reviewed by:		Project:	Pacoima Reservoir Project/1-13-4

No. of Phases				3				3				3				3				3	
Opposed Ø'ing: N/S-1, E/W-2 or Both-3?				0				0				0				0				0	
Right Turns: FREE-1, NRTOR-2 or OLA-3?	NB--	0	SB--	3	NB--	0	SB--	3	NB--	0	SB--	3	NB--	0	SB--	3	NB--	0	SB--	3	
	EB--	0	WB--	0	EB--	0	WB--	0	EB--	0	WB--	0	EB--	0	WB--	0	EB--	0	WB--	0	
ATSAC-1 or ATSAC+ATCS-2?				2				2				2				2				2	
Override Capacity				0				0				0				0				0	

	MOVEMENT	EXISTING CONDITION			EXISTING PLUS PROJECT			FUTURE CONDITION W/O PROJECT				FUTURE CONDITION W/ PROJECT				FUTURE W/ PROJECT W/ MITIGATION			
		Volume	No. of Lanes	Lane Volume	Project Traffic	Total Volume	Lane Volume	Added Volume	Total Volume	No. of Lanes	Lane Volume	Added Volume	Total Volume	No. of Lanes	Lane Volume	Added Volume	Total Volume	No. of Lanes	Lane Volume
NORTHBOUND	Left	0	0	0	0	0	0	0	0	0	0	0	0	0	0	0	0	0	0
	Left-Through		0							0				0				0	
	Through	0	0	**0**	0	0	**0**	0	0	0	**0**	0	0	0	**0**	0	0	0	**0**
	Through-Right		0							0				0				0	
	Right	0	0	0	0	0	0	0	0	0	0	0	0	0	0	0	0	0	0
	Left-Through-Right		0							0				0				0	
	Left-Right		0							0				0				0	
SOUTHBOUND	Left	98	1	**98**	0	98	**98**	0	102	1	**102**	0	102	1	**102**	0	102	1	**102**
	Left-Through		0							0				0				0	
	Through	0	0	0	0	0	0	0	0	0	0	0	0	0	0	0	0	0	0
	Through-Right		0							0				0				0	
	Right	220	1	0	50	270	0	0	230	1	0	50	280	1	0	0	280	1	0
	Left-Through-Right		0							0				0				0	
	Left-Right		1							1				1				1	
EASTBOUND	Left	224	1	**224**	50	274	**274**	0	234	1	**234**	50	284	1	**284**	0	284	1	**284**
	Left-Through		0							0				0				0	
	Through	293	2	147	1	294	147	3	309	2	155	1	310	2	155	0	310	2	155
	Through-Right		0							0				0				0	
	Right	2	0	0	0	2	0	0	2	0	0	0	2	0	0	0	2	0	0
	Left-Through-Right		0							0				0				0	
	Left-Right		0							0				0				0	
WESTBOUND	Left	0	0	0	0	0	0	0	0	0	0	0	0	0	0	0	0	0	0
	Left-Through		0							0				0				0	
	Through	302	2	**151**	1	303	**152**	3	319	2	**160**	1	320	2	**160**	0	320	2	**160**
	Through-Right		0							0				0				0	
	Right	142	1	93	0	142	93	0	148	1	97	0	148	1	97	0	148	1	97
	Left-Through-Right		0							0				0				0	
	Left-Right		0							0				0				0	
CRITICAL VOLUMES		*North-South:*		98	*North-South:*		98	*North-South:*			102	*North-South:*			102	*North-South:*			102
		East-West:		375	*East-West:*		426	*East-West:*			394	*East-West:*			444	*East-West:*			444
		SUM:		473	*SUM:*		524	*SUM:*			496	*SUM:*			546	*SUM:*			546
VOLUME/CAPACITY *(V/C)* RATIO:				0.332			0.368				0.348				0.383				0.383
V/C LESS ATSAC/ATCS ADJUSTMENT:				**0.232**			**0.268**				**0.248**				**0.283**				**0.283**
LEVEL OF SERVICE (LOS):				**A**			**A**				**A**				**A**				**A**

REMARKS: Alt. Route 2: Using only Boulevard Pit

Version: 1i Beta; 8/4/2011

PROJECT IMPACT

Change in *v/c* due to project:	0.035	Δ*v/c* after mitigation:	0.035
Significant impacted?	NO	Fully mitigated?	N/A

Level of Service Workheet
(Circular 212 Method)

I/S #:	North-South Street:	Arleta Avenue	Year of Count:	2015	Ambient Growth: (%):	1.5	Conducted by:	City Traffic Counters	Date:	4/28/2015
CMA1	East-West Street:	Devonshire Street	Projection Year:	2018	Peak Hour:	PM	Reviewed by:		Project:	Pacoima Reservoir Project/1-13-4

No. of Phases			3			3			3			3			3			3
Opposed Ø'ing: N/S-1, E/W-2 or Both-3?			0			0			0			0			0			0
Right Turns: FREE-1, NRTOR-2 or OLA-3?	NB-- 0	SB--	3	NB-- 0	SB--	3	NB-- 0	SB--	3	NB-- 0	SB--	3	NB-- 0	SB--	3	NB-- 0	SB--	3
	EB-- 0	WB--	0	EB-- 0	WB--	0	EB-- 0	WB--	0	EB-- 0	WB--	0	EB-- 0	WB--	0	EB-- 0	WB--	0
ATSAC-1 or ATSAC+ATCS-2?			2			2			2			2			2			2
Override Capacity			0			0			0			0			0			0

	MOVEMENT	EXISTING CONDITION			EXISTING PLUS PROJECT			FUTURE CONDITION W/O PROJECT				FUTURE CONDITION W/ PROJECT				FUTURE W/ PROJECT W/ MITIGATION			
		Volume	No. of Lanes	Lane Volume	Project Traffic	Total Volume	Lane Volume	Added Volume	Total Volume	No. of Lanes	Lane Volume	Added Volume	Total Volume	No. of Lanes	Lane Volume	Added Volume	Total Volume	No. of Lanes	Lane Volume
NORTHBOUND	Left	0	0	0	0	0	0	0	0	0	0	0	0	0	0	0	0	0	0
	Left-Through		0							0				0				0	
	Through	0	0	**0**	0	0	**0**	0	0	0	**0**	0	0	0	**0**	0	0	0	**0**
	Through-Right		0							0				0				0	
	Right	0	0	0	0	0	0	0	0	0	0	0	0	0	0	0	0	0	0
	Left-Through-Right		0							0				0				0	
	Left-Right		0							0				0				0	
SOUTHBOUND	Left	216	1	**162**	0	216	**179**	0	226	1	**170**	0	226	1	**186**	0	226	1	**186**
	Left-Through		0							0				0				0	
	Through	0	0	0	0	0	0	0	0	0	0	0	0	0	0	0	0	0	0
	Through-Right		0							0				0				0	
	Right	271	1	0	50	321	0	0	283	1	0	50	333	1	0	0	333	1	0
	Left-Through-Right		0							0				0				0	
	Left-Right		1							1				1				1	
EASTBOUND	Left	420	1	**420**	50	470	**470**	0	439	1	**439**	50	489	1	**489**	0	489	1	**489**
	Left-Through		0							0				0				0	
	Through	498	2	249	1	499	250	4	525	2	263	1	526	2	263	0	526	2	263
	Through-Right		0							0				0				0	
	Right	0	0	0	0	0	0	0	0	0	0	0	0	0	0	0	0	0	0
	Left-Through-Right		0							0				0				0	
	Left-Right		0							0				0				0	
WESTBOUND	Left	0	0	0	0	0	0	0	0	0	0	0	0	0	0	0	0	0	0
	Left-Through		0							0				0				0	
	Through	436	2	218	1	437	219	5	461	2	231	1	462	2	231	0	462	2	231
	Through-Right		0							0				0				0	
	Right	350	1	**269**	0	350	**261**	0	366	1	**281**	0	366	1	**273**	0	366	1	**273**
	Left-Through-Right		0							0				0				0	
	Left-Right		0							0				0				0	
CRITICAL VOLUMES		*North-South:*		162	*North-South:*		179	*North-South:*			170	*North-South:*			186	*North-South:*			186
		East-West:		689	*East-West:*		731	*East-West:*			720	*East-West:*			762	*East-West:*			762
		SUM:		851	*SUM:*		910	*SUM:*			890	*SUM:*			948	*SUM:*			948
VOLUME/CAPACITY *(V/C)* RATIO:				0.597			0.639				0.625				0.665				0.665
V/C LESS ATSAC/ATCS ADJUSTMENT:				**0.497**			**0.539**				**0.525**				**0.565**				**0.565**
LEVEL OF SERVICE (LOS):				**A**			**A**				**A**				**A**				**A**

REMARKS: Alt. Route 2: Using only Boulevard Pit

Version: 1i Beta; 8/4/2011

PROJECT IMPACT

Change in *v/c* due to project:	0.040	Δ*v/c* after mitigation:	0.040
Significant impacted?	NO	Fully mitigated?	N/A

Level of Service Workheet
(Circular 212 Method)

I/S #:	North-South Street:	Arleta Avenue	Year of Count:	2015	Ambient Growth: (%):	1.5	Conducted by:	City Traffic Counters	Date:	8/13/2015
CMA2	East-West Street:	Paxton Street	Projection Year:	2018	Peak Hour:	AM	Reviewed by:		Project:	Pacoima Reservoir Project/1-13-4

No. of Phases				0				0				0				0				0			
Opposed Ø'ing: N/S-1, E/W-2 or Both-3?				0				0				0				0				0			
Right Turns: FREE-1, NRTOR-2 or OLA-3?	NB--	0	SB--	0	NB--	0	SB--	0	NB--	0	SB--	0	NB--	0	SB--	0	NB--	0	SB--	0	NB--	0	SB--	0
	EB--	0	WB--	0	EB--	0	WB--	0	EB--	0	WB--	0	EB--	0	WB--	0	EB--	0	WB--	0	EB--	0	WB--	0
ATSAC-1 or ATSAC+ATCS-2?				0				0				0				0				0				0
Override Capacity				1425				1425				1425				1425				1425				1425

MOVEMENT		EXISTING CONDITION			EXISTING PLUS PROJECT			FUTURE CONDITION W/O PROJECT				FUTURE CONDITION W/ PROJECT				FUTURE W/ PROJECT W/ MITIGATION			
		Volume	No. of Lanes	Lane Volume	Project Traffic	Total Volume	Lane Volume	Added Volume	Total Volume	No. of Lanes	Lane Volume	Added Volume	Total Volume	No. of Lanes	Lane Volume	Added Volume	Total Volume	No. of Lanes	Lane Volume
NORTHBOUND	Left	0	0	0	0	0	0	0	0	0	0	0	0	0	0	0	0	0	0
	Left-Through		0							0				0				0	
	Through	86	1	86	0	86	86	0	90	1	90	0	90	1	90	0	90	1	90
	Through-Right		1							1				1				1	
	Right	516	0	**332**	50	566	**368**	0	540	0	**347**	50	590	0	**383**	0	590	0	**383**
	Left-Through-Right		0							0				0				0	
	Left-Right		0							0				0				0	
SOUTHBOUND	Left	177	1	**177**	0	177	**177**	2	187	1	**187**	0	187	1	**187**	0	187	1	**187**
	Left-Through		0							0				0				0	
	Through	231	2	116	0	231	116	0	242	2	121	0	242	2	121	0	242	2	121
	Through-Right		0							0				0				0	
	Right	0	0	0	0	0	0	0	0	0	0	0	0	0	0	0	0	0	0
	Left-Through-Right		0							0				0				0	
	Left-Right		0							0				0				0	
EASTBOUND	Left	0	0	0	0	0	0	0	0	0	0	0	0	0	0	0	0	0	0
	Left-Through		0							0				0				0	
	Through	0	0	**0**	0	0	**0**	0	0	0	**0**	0	0	0	**0**	0	0	0	**0**
	Through-Right		0							0				0				0	
	Right	0	0	0	0	0	0	0	0	0	0	0	0	0	0	0	0	0	0
	Left-Through-Right		0							0				0				0	
	Left-Right		0							0				0				0	
WESTBOUND	Left	671	2	**369**	50	721	**397**	0	702	2	**386**	50	752	2	**414**	0	752	2	**414**
	Left-Through		0							0				0				0	
	Through	0	0	0	0	0	0	0	0	0	0	0	0	0	0	0	0	0	0
	Through-Right		0							0				0				0	
	Right	82	1	0	0	82	0	3	89	1	0	0	89	1	0	0	89	1	0
	Left-Through-Right		0							0				0				0	
	Left-Right		0							0				0				0	
CRITICAL VOLUMES			*North-South:*	509		*North-South:*	545		*North-South:*	534			*North-South:*	570			*North-South:*	570	
			East-West:	369		*East-West:*	397		*East-West:*	386			*East-West:*	414			*East-West:*	414	
			SUM:	878		*SUM:*	942		*SUM:*	920			*SUM:*	984			*SUM:*	984	
VOLUME/CAPACITY *(V/C)* RATIO:				0.616			0.661				0.646				0.691				0.691
V/C LESS ATSAC/ATCS ADJUSTMENT:				0.616			0.661				0.646				0.691				0.691
LEVEL OF SERVICE (LOS):				**B**			**B**				**B**				**B**				**B**

REMARKS: Alt. Route 2: Using only Boulevard Pit. Based on field observations, over 1,750 vehicles currently traverse through the intersection during the peak hour. Fewer turning movements occur at the intersection due to the "T" intersection configuration. In addition, two primary movements which are complementary (i.e., NBRT/WBLT) occur during peak hours and are non-conflicting moves. A capacity of 1,425 vph is therefore utilized.

Version: 1i Beta; 8/4/2011

PROJECT IMPACT

Change in *v/c* due to project:	0.045	**Δ*v/c* after mitigation:**	0.045
Significant impacted?	NO	**Fully mitigated?**	N/A

Level of Service Workheet
(Circular 212 Method)

I/S #:	North-South Street:	Arleta Avenue	Year of Count:	2015	Ambient Growth: (%):	1.5	Conducted by:	City Traffic Counters	Date:	8/13/2015
CMA2	East-West Street:	Paxton Street	Projection Year:	2018	Peak Hour:	Mid-Day	Reviewed by:		Project:	Pacoima Reservoir Project/1-13-4

No. of Phases				0				0				0				0				0	
Opposed Ø'ing: N/S-1, E/W-2 or Both-3?				0				0				0				0				0	
Right Turns: FREE-1, NRTOR-2 or OLA-3?	NB--	0	SB--	0	NB--	0	SB--	0	NB--	0	SB--	0	NB--	0	SB--	0	NB--	0	SB--	0	
	EB--	0	WB--	0	EB--	0	WB--	0	EB--	0	WB--	0	EB--	0	WB--	0	EB--	0	WB--	0	
ATSAC-1 or ATSAC+ATCS-2?				0				0				0				0				0	
Override Capacity				1425				1425				1425				1425				1425	

MOVEMENT		EXISTING CONDITION			EXISTING PLUS PROJECT			FUTURE CONDITION W/O PROJECT				FUTURE CONDITION W/ PROJECT				FUTURE W/ PROJECT W/ MITIGATION			
		Volume	No. of Lanes	Lane Volume	Project Traffic	Total Volume	Lane Volume	Added Volume	Total Volume	No. of Lanes	Lane Volume	Added Volume	Total Volume	No. of Lanes	Lane Volume	Added Volume	Total Volume	No. of Lanes	Lane Volume
NORTHBOUND	Left	0	0	0	0	0	0	0	0	0	0	0	0	0	0	0	0	0	0
	Left-Through		0							0				0				0	
	Through	50	1	50	0	50	50	0	52	1	52	0	52	1	52	0	52	1	52
	Through-Right		1							1				1				1	
	Right	309	0	**235**	50	359	**271**	0	323	0	**245**	50	373	0	**282**	0	373	0	**282**
	Left-Through-Right		0							0				0				0	
	Left-Right		0							0				0				0	
SOUTHBOUND	Left	82	1	**82**	0	82	**82**	3	89	1	**89**	0	89	1	**89**	0	89	1	**89**
	Left-Through		0							0				0				0	
	Through	44	2	22	0	44	22	0	46	2	23	0	46	2	23	0	46	2	23
	Through-Right		0							0				0				0	
	Right	0	0	0	0	0	0	0	0	0	0	0	0	0	0	0	0	0	0
	Left-Through-Right		0							0				0				0	
	Left-Right		0							0				0				0	
EASTBOUND	Left	0	0	0	0	0	0	0	0	0	0	0	0	0	0	0	0	0	0
	Left-Through		0							0				0				0	
	Through	0	0	**0**	0	0	**0**	0	0	0	**0**	0	0	0	**0**	0	0	0	**0**
	Through-Right		0							0				0				0	
	Right	0	0	0	0	0	0	0	0	0	0	0	0	0	0	0	0	0	0
	Left-Through-Right		0							0				0				0	
	Left-Right		0							0				0				0	
WESTBOUND	Left	271	2	**149**	50	321	**177**	0	283	2	**156**	50	333	2	**183**	0	333	2	**183**
	Left-Through		0							0				0				0	
	Through	0	0	0	0	0	0	0	0	0	0	0	0	0	0	0	0	0	0
	Through-Right		0							0				0				0	
	Right	108	1	67	0	108	67	3	116	1	72	0	116	1	72	0	116	1	72
	Left-Through-Right		0							0				0				0	
	Left-Right		0							0				0				0	
CRITICAL VOLUMES			*North-South:*	317		*North-South:*	353			*North-South:*	334			*North-South:*	371			*North-South:*	371
			East-West:	149		*East-West:*	177			*East-West:*	156			*East-West:*	183			*East-West:*	183
			SUM:	466		*SUM:*	530			*SUM:*	490			*SUM:*	554			*SUM:*	554
VOLUME/CAPACITY *(V/C)* RATIO:				0.327			0.372				0.344				0.389				0.389
V/C LESS ATSAC/ATCS ADJUSTMENT:				0.327			0.372				0.344				0.389				0.389
LEVEL OF SERVICE (LOS):				A			A				A				A				A

REMARKS: Alt. Route 2: Using only Boulevard Pit. Based on field observations, over 1,750 vehicles currently traverse through the intersection during the peak hour. Fewer turning movements occur at the intersection due to the "T" intersection configuration. In addition, two primary movements which are complementary (i.e., NBRT/WBLT) occur during peak hours and are non-conflicting moves. A capacity of 1,425 vph is therefore utilized.

Version: 1i Beta; 8/4/2011

PROJECT IMPACT

Change in *v/c* due to project:	0.045	**Δ*v/c* after mitigation:**	0.045
Significant impacted?	NO	**Fully mitigated?**	N/A

Level of Service Workheet
(Circular 212 Method)

I/S #:	North-South Street:	Arleta Avenue	Year of Count:	2015	Ambient Growth: (%):	1.5	Conducted by:	City Traffic Counters	Date:	8/13/2015
CMA2	East-West Street:	Paxton Street	Projection Year:	2018	Peak Hour:	PM	Reviewed by:		Project:	Pacoima Reservoir Project/1-13-4

No. of Phases				0				0				0				0				0			
Opposed Ø'ing: N/S-1, E/W-2 or Both-3?				0				0				0				0				0			
Right Turns: FREE-1, NRTOR-2 or OLA-3?	NB--	0	SB--	0	NB--	0	SB--	0	NB--	0	SB--	0	NB--	0	SB--	0	NB--	0	SB--	0	NB--	0	SB--	0
	EB--	0	WB--	0	EB--	0	WB--	0	EB--	0	WB--	0	EB--	0	WB--	0	EB--	0	WB--	0	EB--	0	WB--	0
ATSAC-1 or ATSAC+ATCS-2?				0				0				0				0				0				0
Override Capacity				1425				1425				1425				1425				1425				1425

MOVEMENT		EXISTING CONDITION			EXISTING PLUS PROJECT			FUTURE CONDITION W/O PROJECT				FUTURE CONDITION W/ PROJECT				FUTURE W/ PROJECT W/ MITIGATION			
		Volume	No. of Lanes	Lane Volume	Project Traffic	Total Volume	Lane Volume	Added Volume	Total Volume	No. of Lanes	Lane Volume	Added Volume	Total Volume	No. of Lanes	Lane Volume	Added Volume	Total Volume	No. of Lanes	Lane Volume
NORTHBOUND	Left	0	0	0	0	0	0	0	0	0	0	0	0	0	0	0	0	0	0
	Left-Through		0							0				0				0	
	Through	132	1	132	0	132	132	0	138	1	138	0	138	1	138	0	138	1	138
	Through-Right		1							1				1				1	
	Right	644	0	**524**	50	694	**560**	0	673	0	**548**	50	723	0	**584**	0	723	0	**584**
	Left-Through-Right		0							0				0				0	
	Left-Right		0							0				0				0	
SOUTHBOUND	Left	85	1	**85**	0	85	**85**	3	92	1	**92**	0	92	1	**92**	0	92	1	**92**
	Left-Through		0							0				0				0	
	Through	70	2	35	0	70	35	0	73	2	37	0	73	2	37	0	73	2	37
	Through-Right		0							0				0				0	
	Right	0	0	0	0	0	0	0	0	0	0	0	0	0	0	0	0	0	0
	Left-Through-Right		0							0				0				0	
	Left-Right		0							0				0				0	
EASTBOUND	Left	0	0	0	0	0	0	0	0	0	0	0	0	0	0	0	0	0	0
	Left-Through		0							0				0				0	
	Through	0	0	**0**	0	0	**0**	0	0	0	**0**	0	0	0	**0**	0	0	0	**0**
	Through-Right		0							0				0				0	
	Right	0	0	0	0	0	0	0	0	0	0	0	0	0	0	0	0	0	0
	Left-Through-Right		0							0				0				0	
	Left-Right		0							0				0				0	
WESTBOUND	Left	437	2	**240**	50	487	**268**	0	457	2	**251**	50	507	2	**279**	0	507	2	**279**
	Left-Through		0							0				0				0	
	Through	0	0	0	0	0	0	0	0	0	0	0	0	0	0	0	0	0	0
	Through-Right		0							0				0				0	
	Right	105	1	63	0	105	63	3	113	1	67	0	113	1	67	0	113	1	67
	Left-Through-Right		0							0				0				0	
	Left-Right		0							0				0				0	
CRITICAL VOLUMES			*North-South:*	609		*North-South:*	645		*North-South:*	640			*North-South:*	676			*North-South:*	676	
			East-West:	240		*East-West:*	268		*East-West:*	251			*East-West:*	279			*East-West:*	279	
			SUM:	849		*SUM:*	913		*SUM:*	891			*SUM:*	955			*SUM:*	955	
VOLUME/CAPACITY *(V/C)* RATIO:				0.596			0.641			0.625				0.670				0.670	
V/C LESS ATSAC/ATCS ADJUSTMENT:				0.596			0.641			0.625				0.670				0.670	
LEVEL OF SERVICE (LOS):				**A**			**B**			**B**				**B**				**B**	

REMARKS: Alt. Route 2: Using only Boulevard Pit. Based on field observations, over 1,750 vehicles currently traverse through the intersection during the peak hour. Fewer turning movements occur at the intersection due to the "T" intersection configuration. In addition, two primary movements which are complementary (i.e., NBRT/WBLT) occur during peak hours and are non-conflicting moves. A capacity of 1,425 vph is therefore utilized.

Version: 1i Beta; 8/4/2011

PROJECT IMPACT

Change in *v/c* due to project:	0.045	**Δ*v/c* after mitigation:**	0.045
Significant impacted?	NO	**Fully mitigated?**	N/A

Level of Service Workheet
(Circular 212 Method)

I/S #:	North-South Street:	I-5 Freeway SB Ramps	Year of Count:	2015	Ambient Growth: (%):	1.5	Conducted by:	City Traffic Counters	Date:	4/28/2015
CMA3	East-West Street:	Paxton Street	Projection Year:	2018	Peak Hour:	AM	Reviewed by:		Project:	Pacoima Reservoir Project/1-13-4

	EXISTING CONDITION			EXISTING PLUS PROJECT			FUTURE CONDITION W/O PROJECT				FUTURE CONDITION W/ PROJECT				FUTURE W/ PROJECT W/ MITIGATION			
No. of Phases			0			0				0				0				0
Opposed Ø'ing: N/S-1, E/W-2 or Both-3?			0			0				0				0				0
Right Turns: FREE-1, NRTOR-2 or OLA-3?	NB-- 0	SB--	0	NB-- 0	SB--	0	NB-- 0	SB--	0		NB-- 0	SB--	0		NB-- 0	SB--	0	
	EB-- 0	WB--	0	EB-- 0	WB--	0	EB-- 0	WB--	0		EB-- 0	WB--	0		EB-- 0	WB--	0	
ATSAC-1 or ATSAC+ATCS-2?			0			0				0				0				0
Override Capacity			1200			1200				1200				1200				1200

	MOVEMENT	EXISTING CONDITION Volume	No. of Lanes	Lane Volume	EXISTING PLUS PROJECT Project Traffic	Total Volume	Lane Volume	FUTURE CONDITION W/O PROJECT Added Volume	Total Volume	No. of Lanes	Lane Volume	FUTURE CONDITION W/ PROJECT Added Volume	Total Volume	No. of Lanes	Lane Volume	FUTURE W/ PROJECT W/ MITIGATION Added Volume	Total Volume	No. of Lanes	Lane Volume
NORTHBOUND	Left	2	0	**2**	0	2	**2**	0	2	0	**2**	0	2	0	**2**	0	2	0	**2**
	Left-Through		0							0				0				0	
	Through	2	0	103	0	2	103	0	2	0	111	0	2	0	111	0	2	0	111
	Through-Right		0							0				0				0	
	Right	99	0	0	0	99	0	3	107	0	0	0	107	0	0	0	107	0	0
	Left-Through-Right		1							1				1				1	
	Left-Right		0							0				0				0	
SOUTHBOUND	Left	124	0	124	0	124	124	1	131	0	131	0	131	0	131	0	131	0	131
	Left-Through		1							1				1				1	
	Through	11	0	135	0	11	135	0	12	0	143	0	12	0	143	0	12	0	143
	Through-Right		0							0				0				0	
	Right	373	1	**280**	0	373	**265**	1	391	1	**294**	0	391	1	**279**	0	391	1	**279**
	Left-Through-Right		0							0				0				0	
	Left-Right		0							0				0				0	
EASTBOUND	Left	186	1	**186**	30	216	**216**	1	195	1	**195**	30	225	1	**225**	0	225	1	**225**
	Left-Through		0							0				0				0	
	Through	526	1	264	20	546	274	2	552	1	277	20	572	1	287	0	572	1	287
	Through-Right		1							1				1				1	
	Right	1	0	1	0	1	1	0	1	0	1	0	1	0	1	0	1	0	1
	Left-Through-Right		0							0				0				0	
	Left-Right		0							0				0				0	
WESTBOUND	Left	35	1	35	0	35	35	3	40	1	40	0	40	1	40	0	40	1	40
	Left-Through		0							0				0				0	
	Through	363	1	**317**	50	413	**342**	2	382	1	**333**	50	432	1	**358**	0	432	1	**358**
	Through-Right		1							1				1				1	
	Right	270	0	270	0	270	270	1	283	0	283	0	283	0	283	0	283	0	283
	Left-Through-Right		0							0				0				0	
	Left-Right		0							0				0				0	
CRITICAL VOLUMES		*North-South:*		282	*North-South:*		267	*North-South:*			296	*North-South:*			281	*North-South:*			281
		East-West:		503	*East-West:*		558	*East-West:*			528	*East-West:*			583	*East-West:*			583
		SUM:		785	*SUM:*		825	*SUM:*			824	*SUM:*			864	*SUM:*			864
VOLUME/CAPACITY *(V/C)* RATIO:				0.654			0.688				0.687				0.720				0.720
V/C LESS ATSAC/ATCS ADJUSTMENT:				0.654			0.688				0.687				0.720				0.720
LEVEL OF SERVICE (LOS):				B			B				B				C				C

REMARKS: Alt. Route 2: Using only Boulevard Pit

Version: 1i Beta; 8/4/2011

PROJECT IMPACT

Change in *v/c* due to project:	0.033	Δ*v/c* after mitigation:	0.033
Significant impacted?	NO	Fully mitigated?	N/A

Level of Service Workheet
(Circular 212 Method)

I/S #:	North-South Street:	I-5 Freeway SB Ramps	Year of Count:	2015	Ambient Growth: (%):	1.5	Conducted by:	City Traffic Counters	Date:	4/28/2015
CMA3	East-West Street:	Paxton Street	Projection Year:	2018	Peak Hour:	Mid-Day	Reviewed by:		Project:	Pacoima Reservoir Project/1-13-4

No. of Phases				0				0				0				0				0			
Opposed Ø'ing: N/S-1, E/W-2 or Both-3?				0				0				0				0				0			
Right Turns: FREE-1, NRTOR-2 or OLA-3?	NB--	0	SB--	0	NB--	0	SB--	0	NB--	0	SB--	0	NB--	0	SB--	0	NB--	0	SB--	0			
	EB--	0	WB--	0	EB--	0	WB--	0	EB--	0	WB--	0	EB--	0	WB--	0	EB--	0	WB--	0			
ATSAC-1 or ATSAC+ATCS-2?				0				0				0				0				0			
Override Capacity				1200				1200				1200				1200				1200			

MOVEMENT		EXISTING CONDITION			EXISTING PLUS PROJECT			FUTURE CONDITION W/O PROJECT				FUTURE CONDITION W/ PROJECT				FUTURE W/ PROJECT W/ MITIGATION			
		Volume	No. of Lanes	Lane Volume	Project Traffic	Total Volume	Lane Volume	Added Volume	Total Volume	No. of Lanes	Lane Volume	Added Volume	Total Volume	No. of Lanes	Lane Volume	Added Volume	Total Volume	No. of Lanes	Lane Volume
NORTHBOUND	Left	0	0	0	0	0	0	0	0	0	0	0	0	0	0	0	0	0	0
	Left-Through		0							0				0				0	
	Through	1	0	**37**	0	1	**37**	0	1	0	**39**	0	1	0	**39**	0	1	0	**39**
	Through-Right		0							0				0				0	
	Right	36	0	0	0	36	0	0	38	0	0	0	38	0	0	0	38	0	0
	Left-Through-Right		1							1				1				1	
	Left-Right		0							0				0				0	
SOUTHBOUND	Left	66	0	**66**	0	66	**66**	1	70	0	**70**	0	70	0	**70**	0	70	0	**70**
	Left-Through		1							1				1				1	
	Through	7	0	73	0	7	73	0	7	0	77	0	7	0	77	0	7	0	77
	Through-Right		0							0				0				0	
	Right	33	1	5	0	33	0	1	36	1	6	0	36	1	0	0	36	1	0
	Left-Through-Right		0							0				0				0	
	Left-Right		0							0				0				0	
EASTBOUND	Left	56	1	**56**	30	86	**86**	1	60	1	**60**	30	90	1	**90**	0	90	1	**90**
	Left-Through		0							0				0				0	
	Through	348	1	175	20	368	185	2	366	1	184	20	386	1	194	0	386	1	194
	Through-Right		1							1				1				1	
	Right	2	0	2	0	2	2	0	2	0	2	0	2	0	2	0	2	0	2
	Left-Through-Right		0							0				0				0	
	Left-Right		0							0				0				0	
WESTBOUND	Left	35	1	35	0	35	35	0	37	1	37	0	37	1	37	0	37	1	37
	Left-Through		0							0				0				0	
	Through	351	1	**209**	50	401	**234**	2	369	1	**220**	50	419	1	**245**	0	419	1	**245**
	Through-Right		1							1				1				1	
	Right	67	0	67	0	67	67	1	71	0	71	0	71	0	71	0	71	0	71
	Left-Through-Right		0							0				0				0	
	Left-Right		0							0				0				0	
CRITICAL VOLUMES		*North-South:*		103	*North-South:*		103	*North-South:*			109	*North-South:*			109	*North-South:*			109
		East-West:		265	*East-West:*		320	*East-West:*			280	*East-West:*			335	*East-West:*			335
		SUM:		368	*SUM:*		423	*SUM:*			389	*SUM:*			444	*SUM:*			444
VOLUME/CAPACITY *(V/C)* RATIO:				0.307			0.353				0.324				0.370				0.370
V/C LESS ATSAC/ATCS ADJUSTMENT:				0.307			0.353				0.324				0.370				0.370
LEVEL OF SERVICE (LOS):				A			A				A				A				A

REMARKS: Alt. Route 2: Using only Boulevard Pit

Version: 1i Beta; 8/4/2011

PROJECT IMPACT

Change in *v/c* due to project:	0.046	Δ*v/c* after mitigation:	0.046
Significant impacted?	NO	Fully mitigated?	N/A

Level of Service Workheet
(Circular 212 Method)

I/S #:	North-South Street:	I-5 Freeway SB Ramps	Year of Count:	2015	Ambient Growth: (%):	1.5	Conducted by:	City Traffic Counters	Date:	4/28/2015
CMA3	East-West Street:	Paxton Street	Projection Year:	2018	Peak Hour:	PM	Reviewed by:		Project:	Pacoima Reservoir Project/1-13-4

No. of Phases				0				0				0				0				0			0
Opposed Ø'ing: N/S-1, E/W-2 or Both-3?				0				0				0				0				0			0
Right Turns: FREE-1, NRTOR-2 or OLA-3?	NB--	0	SB--	0	NB--	0	SB--	0	NB--	0	SB--	0	NB--	0	SB--	0	NB--	0	SB--	0	NB--	0	SB--	0
	EB--	0	WB--	0	EB--	0	WB--	0	EB--	0	WB--	0	EB--	0	WB--	0	EB--	0	WB--	0	EB--	0	WB--	0
ATSAC-1 or ATSAC+ATCS-2?				0				0				0				0				0				0
Override Capacity				1200				1200				1200				1200				1200				1200

MOVEMENT		EXISTING CONDITION			EXISTING PLUS PROJECT			FUTURE CONDITION W/O PROJECT				FUTURE CONDITION W/ PROJECT				FUTURE W/ PROJECT W/ MITIGATION			
		Volume	No. of Lanes	Lane Volume	Project Traffic	Total Volume	Lane Volume	Added Volume	Total Volume	No. of Lanes	Lane Volume	Added Volume	Total Volume	No. of Lanes	Lane Volume	Added Volume	Total Volume	No. of Lanes	Lane Volume
NORTHBOUND	Left	1	0	1	0	1	1	0	1	0	1	0	1	0	1	0	1	0	1
	Left-Through		0							0				0				0	
	Through	2	0	**61**	0	2	**61**	0	2	0	**66**	0	2	0	**66**	0	2	0	**66**
	Through-Right		0							0				0				0	
	Right	58	0	0	0	58	0	2	63	0	0	0	63	0	0	0	63	0	0
	Left-Through-Right		1							1				1				1	
	Left-Right		0							0				0				0	
SOUTHBOUND	Left	145	0	**145**	0	145	**145**	1	153	0	**153**	0	153	0	**153**	0	153	0	**153**
	Left-Through		1							1				1				1	
	Through	14	0	159	0	14	159	0	15	0	168	0	15	0	168	0	15	0	168
	Through-Right		0							0				0				0	
	Right	117	1	88	0	117	73	1	123	1	92	0	123	1	77	0	123	1	77
	Left-Through-Right		0							0				0				0	
	Left-Right		0							0				0				0	
EASTBOUND	Left	58	1	58	30	88	88	1	62	1	62	30	92	1	92	0	92	1	92
	Left-Through		0							0				0				0	
	Through	672	1	**340**	20	692	**350**	2	705	1	**357**	20	725	1	**367**	0	725	1	**367**
	Through-Right		1							1				1				1	
	Right	8	0	8	0	8	8	0	8	0	8	0	8	0	8	0	8	0	8
	Left-Through-Right		0							0				0				0	
	Left-Right		0							0				0				0	
WESTBOUND	Left	71	1	**71**	0	71	**71**	2	76	1	**76**	0	76	1	**76**	0	76	1	**76**
	Left-Through		0							0				0				0	
	Through	409	1	245	50	459	270	2	430	1	258	50	480	1	283	0	480	1	283
	Through-Right		1							1				1				1	
	Right	81	0	81	0	81	81	1	86	0	86	0	86	0	86	0	86	0	86
	Left-Through-Right		0							0				0				0	
	Left-Right		0							0				0				0	
CRITICAL VOLUMES		*North-South:*		206	*North-South:*		206	*North-South:*			219	*North-South:*			219	*North-South:*			219
		East-West:		411	*East-West:*		421	*East-West:*			433	*East-West:*			443	*East-West:*			443
		SUM:		617	*SUM:*		627	*SUM:*			652	*SUM:*			662	*SUM:*			662
VOLUME/CAPACITY *(V/C)* RATIO:				0.514			0.523				0.543				0.552				0.552
V/C LESS ATSAC/ATCS ADJUSTMENT:				0.514			0.523				0.543				0.552				0.552
LEVEL OF SERVICE (LOS):				A			A				A				A				A

REMARKS: Alt. Route 2: Using only Boulevard Pit

Version: 1i Beta; 8/4/2011

PROJECT IMPACT

Change in *v/c* due to project:	0.009	Δ*v/c* after mitigation:	0.009
Significant impacted?	NO	Fully mitigated?	N/A

Level of Service Workheet
(Circular 212 Method)

I/S #:	North-South Street:	I-5 Freeway NB Ramps	Year of Count:	2015	Ambient Growth: (%):	1.5	Conducted by:	City Traffic Counters	Date:	4/28/2015
CMA4	East-West Street:	Paxton Street	Projection Year:	2018	Peak Hour:	AM	Reviewed by:		Project:	Pacoima Reservoir Project/1-13-4

No. of Phases				0				0				0				0				0			0
Opposed Ø'ing: N/S-1, E/W-2 or Both-3?				0				0				0				0				0			0
Right Turns: FREE-1, NRTOR-2 or OLA-3?	NB--	0	SB--	0	NB--	0	SB--	0	NB--	0	SB--	0	NB--	0	SB--	0	NB--	0	SB--	0	NB--	0	SB--	0
	EB--	0	WB--	0	EB--	0	WB--	0	EB--	0	WB--	0	EB--	0	WB--	0	EB--	0	WB--	0	EB--	0	WB--	0
ATSAC-1 or ATSAC+ATCS-2?				0				0				0				0				0				0
Override Capacity				1200				1200				1200				1200				1200				1200

MOVEMENT		EXISTING CONDITION			EXISTING PLUS PROJECT			FUTURE CONDITION W/O PROJECT				FUTURE CONDITION W/ PROJECT				FUTURE W/ PROJECT W/ MITIGATION			
		Volume	No. of Lanes	Lane Volume	Project Traffic	Total Volume	Lane Volume	Added Volume	Total Volume	No. of Lanes	Lane Volume	Added Volume	Total Volume	No. of Lanes	Lane Volume	Added Volume	Total Volume	No. of Lanes	Lane Volume
NORTHBOUND	Left	12	0	12	0	12	12	0	13	0	13	0	13	0	13	0	13	0	13
	Left-Through		0							0				0				0	
	Through	19	0	**105**	0	19	**105**	0	20	0	**113**	0	20	0	**113**	0	20	0	**113**
	Through-Right		0							0				0				0	
	Right	74	0	0	0	74	0	3	80	0	0	0	80	0	0	0	80	0	0
	Left-Through-Right		1							1				1				1	
	Left-Right		0							0				0				0	
SOUTHBOUND	Left	24	0	**24**	0	24	**24**	1	26	0	**26**	0	26	0	**26**	0	26	0	**26**
	Left-Through		1							1				1				1	
	Through	1	0	25	0	1	25	0	1	0	27	0	1	0	27	0	1	0	27
	Through-Right		0							0				0				0	
	Right	44	1	0	30	74	0	1	47	1	0	30	77	1	0	0	77	1	0
	Left-Through-Right		0							0				0				0	
	Left-Right		0							0				0				0	
EASTBOUND	Left	200	1	**200**	0	200	**200**	1	210	1	**210**	0	210	1	**210**	0	210	1	**210**
	Left-Through		0							0				0				0	
	Through	502	1	265	20	522	275	5	530	1	279	20	550	1	289	0	550	1	289
	Through-Right		1							1				1				1	
	Right	27	0	27	0	27	27	0	28	0	28	0	28	0	28	0	28	0	28
	Left-Through-Right		0							0				0				0	
	Left-Right		0							0				0				0	
WESTBOUND	Left	50	1	50	0	50	50	3	55	1	55	0	55	1	55	0	55	1	55
	Left-Through		0							0				0				0	
	Through	637	1	**368**	20	657	**378**	5	671	1	**388**	20	691	1	**398**	0	691	1	**398**
	Through-Right		1							1				1				1	
	Right	99	0	99	0	99	99	1	105	0	105	0	105	0	105	0	105	0	105
	Left-Through-Right		0							0				0				0	
	Left-Right		0							0				0				0	
CRITICAL VOLUMES		*North-South:*		129	*North-South:*		129	*North-South:*			139	*North-South:*			139	*North-South:*			139
		East-West:		568	*East-West:*		578	*East-West:*			598	*East-West:*			608	*East-West:*			608
		SUM:		697	*SUM:*		707	*SUM:*			737	*SUM:*			747	*SUM:*			747
VOLUME/CAPACITY *(V/C)* RATIO:				0.581			0.589				0.614				0.623				0.623
V/C LESS ATSAC/ATCS ADJUSTMENT:				0.581			0.589				0.614				0.623				0.623
LEVEL OF SERVICE (LOS):				A			A				B				B				B

REMARKS: Alt. Route 2: Using only Boulevard Pit

Version: 1i Beta; 8/4/2011

PROJECT IMPACT

Change in *v/c* due to project:	0.009	Δ*v/c* after mitigation:	0.009
Significant impacted?	NO	Fully mitigated?	N/A

Level of Service Workheet
(Circular 212 Method)

I/S #:	North-South Street:	I-5 Freeway NB Ramps	Year of Count:	2015	Ambient Growth: (%):	1.5	Conducted by:	City Traffic Counters	Date:	4/28/2015
CMA4	East-West Street:	Paxton Street	Projection Year:	2018	Peak Hour:	Mid-Day	Reviewed by:		Project:	Pacoima Reservoir Project/1-13-4

No. of Phases				0				0				0				0				0			
Opposed Ø'ing: N/S-1, E/W-2 or Both-3?				0				0				0				0				0			
Right Turns: FREE-1, NRTOR-2 or OLA-3?	NB--	0	SB--	0	NB--	0	SB--	0	NB--	0	SB--	0	NB--	0	SB--	0	NB--	0	SB--	0			
	EB--	0	WB--	0	EB--	0	WB--	0	EB--	0	WB--	0	EB--	0	WB--	0	EB--	0	WB--	0			
ATSAC-1 or ATSAC+ATCS-2?				0				0				0				0				0			
Override Capacity				1200				1200				1200				1200				1200			

MOVEMENT		EXISTING CONDITION			EXISTING PLUS PROJECT			FUTURE CONDITION W/O PROJECT				FUTURE CONDITION W/ PROJECT				FUTURE W/ PROJECT W/ MITIGATION			
		Volume	No. of Lanes	Lane Volume	Project Traffic	Total Volume	Lane Volume	Added Volume	Total Volume	No. of Lanes	Lane Volume	Added Volume	Total Volume	No. of Lanes	Lane Volume	Added Volume	Total Volume	No. of Lanes	Lane Volume
NORTHBOUND	Left	15	0	15	0	15	15	0	16	0	16	0	16	0	16	0	16	0	16
	Left-Through		0							0				0				0	
	Through	22	0	**70**	0	22	**70**	0	23	0	**74**	0	23	0	**74**	0	23	0	**74**
	Through-Right		0							0				0				0	
	Right	33	0	0	0	33	0	0	35	0	0	0	35	0	0	0	35	0	0
	Left-Through-Right		1							1				1				1	
	Left-Right		0							0				0				0	
SOUTHBOUND	Left	52	0	**52**	0	52	**52**	1	55	0	**55**	0	55	0	**55**	0	55	0	**55**
	Left-Through		1							1				1				1	
	Through	3	0	55	0	3	55	0	3	0	58	0	3	0	58	0	3	0	58
	Through-Right		0							0				0				0	
	Right	66	1	24	30	96	54	1	70	1	25	30	100	1	55	0	100	1	55
	Left-Through-Right		0							0				0				0	
	Left-Right		0							0				0				0	
EASTBOUND	Left	85	1	**85**	0	85	**85**	1	90	1	**90**	0	90	1	**90**	0	90	1	**90**
	Left-Through		0							0				0				0	
	Through	355	1	190	20	375	200	2	373	1	199	20	393	1	209	0	393	1	209
	Through-Right		1							1				1				1	
	Right	24	0	24	0	24	24	0	25	0	25	0	25	0	25	0	25	0	25
	Left-Through-Right		0							0				0				0	
	Left-Right		0							0				0				0	
WESTBOUND	Left	12	1	12	0	12	12	0	13	1	13	0	13	1	13	0	13	1	13
	Left-Through		0							0				0				0	
	Through	363	1	**229**	20	383	**239**	2	382	1	**241**	20	402	1	**251**	0	402	1	**251**
	Through-Right		1							1				1				1	
	Right	94	0	94	0	94	94	1	99	0	99	0	99	0	99	0	99	0	99
	Left-Through-Right		0							0				0				0	
	Left-Right		0							0				0				0	
CRITICAL VOLUMES		*North-South:*		122	*North-South:*		122	*North-South:*			129	*North-South:*			129	*North-South:*			129
		East-West:		314	*East-West:*		324	*East-West:*			331	*East-West:*			341	*East-West:*			341
		SUM:		436	*SUM:*		446	*SUM:*			460	*SUM:*			470	*SUM:*			470
VOLUME/CAPACITY *(V/C)* RATIO:				0.363			0.372				0.383				0.392				0.392
V/C LESS ATSAC/ATCS ADJUSTMENT:				0.363			0.372				0.383				0.392				0.392
LEVEL OF SERVICE (LOS):				A			A				A				A				A

REMARKS: Alt. Route 2: Using only Boulevard Pit

Version: 1i Beta; 8/4/2011

PROJECT IMPACT

Change in *v/c* due to project:	0.009	Δ*v/c* after mitigation:	0.009
Significant impacted?	NO	Fully mitigated?	N/A

Level of Service Workheet
(Circular 212 Method)

I/S #:	North-South Street:	I-5 Freeway NB Ramps	Year of Count:	2015	Ambient Growth: (%):	1.5	Conducted by:	City Traffic Counters	Date:	4/28/2015
CMA4	East-West Street:	Paxton Street	Projection Year:	2018	Peak Hour:	PM	Reviewed by:		Project:	Pacoima Reservoir Project/1-13-4

No. of Phases				0				0				0				0				0			0
Opposed Ø'ing: N/S-1, E/W-2 or Both-3?				0				0				0				0				0			0
Right Turns: FREE-1, NRTOR-2 or OLA-3?	NB--	0	SB--	0	NB--	0	SB--	0	NB--	0	SB--	0	NB--	0	SB--	0	NB--	0	SB--	0	NB--	0	SB--	0
	EB--	0	WB--	0	EB--	0	WB--	0	EB--	0	WB--	0	EB--	0	WB--	0	EB--	0	WB--	0	EB--	0	WB--	0
ATSAC-1 or ATSAC+ATCS-2?				0				0				0				0				0				0
Override Capacity				1200				1200				1200				1200				1200				1200

MOVEMENT		EXISTING CONDITION			EXISTING PLUS PROJECT			FUTURE CONDITION W/O PROJECT				FUTURE CONDITION W/ PROJECT				FUTURE W/ PROJECT W/ MITIGATION			
		Volume	No. of Lanes	Lane Volume	Project Traffic	Total Volume	Lane Volume	Added Volume	Total Volume	No. of Lanes	Lane Volume	Added Volume	Total Volume	No. of Lanes	Lane Volume	Added Volume	Total Volume	No. of Lanes	Lane Volume
NORTHBOUND	Left	6	0	6	0	6	6	0	6	0	6	0	6	0	6	0	6	0	6
	Left-Through		0							0				0				0	
	Through	8	0	**57**	0	8	**57**	0	8	0	**61**	0	8	0	**61**	0	8	0	**61**
	Through-Right		0							0				0				0	
	Right	43	0	0	0	43	0	2	47	0	0	0	47	0	0	0	47	0	0
	Left-Through-Right		1							1				1				1	
	Left-Right		0							0				0				0	
SOUTHBOUND	Left	69	0	**69**	0	69	**69**	1	73	0	**73**	0	73	0	**73**	0	73	0	**73**
	Left-Through		1							1				1				1	
	Through	6	0	75	0	6	75	0	6	0	79	0	6	0	79	0	6	0	79
	Through-Right		0							0				0				0	
	Right	57	1	0	30	87	0	1	61	1	0	30	91	1	0	0	91	1	0
	Left-Through-Right		0							0				0				0	
	Left-Right		0							0				0				0	
EASTBOUND	Left	226	1	**226**	0	226	**226**	1	237	1	**237**	0	237	1	**237**	0	237	1	**237**
	Left-Through		0							0				0				0	
	Through	623	1	322	20	643	332	4	655	1	338	20	675	1	348	0	675	1	348
	Through-Right		1							1				1				1	
	Right	20	0	20	0	20	20	0	21	0	21	0	21	0	21	0	21	0	21
	Left-Through-Right		0							0				0				0	
	Left-Right		0							0				0				0	
WESTBOUND	Left	14	1	14	0	14	14	2	17	1	17	0	17	1	17	0	17	1	17
	Left-Through		0							0				0				0	
	Through	489	1	**343**	20	509	**353**	4	515	1	**361**	20	535	1	**371**	0	535	1	**371**
	Through-Right		1							1				1				1	
	Right	197	0	197	0	197	197	1	207	0	207	0	207	0	207	0	207	0	207
	Left-Through-Right		0							0				0				0	
	Left-Right		0							0				0				0	
CRITICAL VOLUMES		*North-South:*		126	*North-South:*		126	*North-South:*			134	*North-South:*			134	*North-South:*			134
		East-West:		569	*East-West:*		579	*East-West:*			598	*East-West:*			608	*East-West:*			608
		SUM:		695	*SUM:*		705	*SUM:*			732	*SUM:*			742	*SUM:*			742
VOLUME/CAPACITY *(V/C)* RATIO:				0.579			0.588				0.610				0.618				0.618
V/C LESS ATSAC/ATCS ADJUSTMENT:				0.579			0.588				0.610				0.618				0.618
LEVEL OF SERVICE (LOS):				A			A				B				B				B

REMARKS: Alt. Route 2: Using only Boulevard Pit

Version: 1i Beta; 8/4/2011

PROJECT IMPACT

Change in *v/c* due to project:	0.008	Δ*v/c* after mitigation:	0.008
Significant impacted?	NO	Fully mitigated?	N/A

Level of Service Workheet
(Circular 212 Method)

I/S #:	North-South Street:	Laurel Canyon Boulevard	Year of Count:	2015	Ambient Growth: (%):	1.5	Conducted by:	City Traffic Counters	Date:	4/28/2015
CMA5	East-West Street:	Branford Street	Projection Year:	2018	Peak Hour:	AM	Reviewed by:		Project:	Pacoima Reservoir Project/1-13-4

No. of Phases				3				3				3				3				3		
Opposed Ø'ing: N/S-1, E/W-2 or Both-3?				0				0				0				0				0		
Right Turns: FREE-1, NRTOR-2 or OLA-3?	NB--	0	SB--	0	NB--	0	SB--	0	NB--	0	SB--	0	NB--	0	SB--	0	NB--	0	SB--	0		
	EB--	0	WB--	0	EB--	0	WB--	0	EB--	0	WB--	0	EB--	0	WB--	0	EB--	0	WB--	0		
ATSAC-1 or ATSAC+ATCS-2?				2				2				2				2				2		
Override Capacity				0				0				0				0				0		

	MOVEMENT	EXISTING CONDITION			EXISTING PLUS PROJECT			FUTURE CONDITION W/O PROJECT				FUTURE CONDITION W/ PROJECT				FUTURE W/ PROJECT W/ MITIGATION			
		Volume	No. of Lanes	Lane Volume	Project Traffic	Total Volume	Lane Volume	Added Volume	Total Volume	No. of Lanes	Lane Volume	Added Volume	Total Volume	No. of Lanes	Lane Volume	Added Volume	Total Volume	No. of Lanes	Lane Volume
NORTHBOUND	Left	149	2	**82**	0	149	**82**	0	156	2	**86**	0	156	2	**86**	0	156	2	**86**
	Left-Through		0							0				0				0	
	Through	397	1	271	0	397	296	12	427	1	290	0	427	1	315	0	427	1	315
	Through-Right		1							1				1				1	
	Right	145	0	145	50	195	195	0	152	0	152	50	202	0	202	0	202	0	202
	Left-Through-Right		0							0				0				0	
	Left-Right		0							0				0				0	
SOUTHBOUND	Left	136	2	75	0	136	75	1	143	2	79	0	143	2	79	0	143	2	79
	Left-Through		0							0				0				0	
	Through	984	1	**555**	0	984	**555**	8	1037	1	**588**	0	1037	1	**588**	0	1037	1	**588**
	Through-Right		1							1				1				1	
	Right	126	0	126	0	126	126	7	139	0	139	0	139	0	139	0	139	0	139
	Left-Through-Right		0							0				0				0	
	Left-Right		0							0				0				0	
EASTBOUND	Left	98	1	**98**	0	98	**98**	11	113	1	**113**	0	113	1	**113**	0	113	1	**113**
	Left-Through		0							0				0				0	
	Through	524	1	428	0	524	428	0	548	1	448	0	548	1	448	0	548	1	448
	Through-Right		1							1				1				1	
	Right	332	0	332	0	332	332	0	347	0	347	0	347	0	347	0	347	0	347
	Left-Through-Right		0							0				0				0	
	Left-Right		0							0				0				0	
WESTBOUND	Left	172	1	172	0	172	172	0	180	1	180	0	180	1	180	0	180	1	180
	Left-Through		0							0				0				0	
	Through	531	1	**531**	0	531	**531**	0	555	1	**555**	0	555	1	**555**	0	555	1	**555**
	Through-Right		0							0				0				0	
	Right	129	1	92	0	129	92	2	137	1	98	0	137	1	98	0	137	1	98
	Left-Through-Right		0							0				0				0	
	Left-Right		0							0				0				0	
CRITICAL VOLUMES			*North-South:*	637		*North-South:*	637		*North-South:*	674			*North-South:*	674			*North-South:*	674	
			East-West:	629		*East-West:*	629		*East-West:*	668			*East-West:*	668			*East-West:*	668	
			SUM:	1266		*SUM:*	1266		*SUM:*	1342			*SUM:*	1342			*SUM:*	1342	
VOLUME/CAPACITY *(V/C)* RATIO:				0.888			0.888			0.942				0.942				0.942	
V/C LESS ATSAC/ATCS ADJUSTMENT:				**0.788**			**0.788**			**0.842**				**0.842**				**0.842**	
LEVEL OF SERVICE (LOS):				**C**			**C**			**D**				**D**				**D**	

REMARKS: Alt. Route 2: Using only Boulevard Pit

Version: 1i Beta; 8/4/2011

PROJECT IMPACT

Change in *v/c* due to project:	0.000	Δ*v/c* after mitigation:	0.000
Significant impacted?	NO	Fully mitigated?	N/A

Level of Service Workheet
(Circular 212 Method)

I/S #:	North-South Street:	Laurel Canyon Boulevard	Year of Count:	2015	Ambient Growth: (%):	1.5	Conducted by:	City Traffic Counters	Date:	4/28/2015
CMA5	East-West Street:	Branford Street	Projection Year:	2018	Peak Hour:	Mid-Day	Reviewed by:		Project:	Pacoima Reservoir Project/1-13-4

No. of Phases				3				3				3				3				3			3
Opposed Ø'ing: N/S-1, E/W-2 or Both-3?				0				0				0				0				0			0
Right Turns: FREE-1, NRTOR-2 or OLA-3?	NB--	0	SB--	0	NB--	0	SB--	0	NB--	0	SB--	0	NB--	0	SB--	0	NB--	0	SB--	0	NB--	0	SB--	0
	EB--	0	WB--	0	EB--	0	WB--	0	EB--	0	WB--	0	EB--	0	WB--	0	EB--	0	WB--	0	EB--	0	WB--	0
ATSAC-1 or ATSAC+ATCS-2?				2				2				2				2				2			2
Override Capacity				0				0				0				0				0			0

	MOVEMENT	EXISTING CONDITION			EXISTING PLUS PROJECT			FUTURE CONDITION W/O PROJECT				FUTURE CONDITION W/ PROJECT				FUTURE W/ PROJECT W/ MITIGATION			
		Volume	No. of Lanes	Lane Volume	Project Traffic	Total Volume	Lane Volume	Added Volume	Total Volume	No. of Lanes	Lane Volume	Added Volume	Total Volume	No. of Lanes	Lane Volume	Added Volume	Total Volume	No. of Lanes	Lane Volume
NORTHBOUND	Left	94	2	52	0	94	52	0	98	2	54	0	98	2	54	0	98	2	54
	Left-Through		0							0				0				0	
	Through	455	1	**284**	0	455	**309**	1	477	1	**297**	0	477	1	**322**	0	477	1	**322**
	Through-Right		1							1				1				1	
	Right	112	0	112	50	162	162	0	117	0	117	50	167	0	167	0	167	0	167
	Left-Through-Right		0							0				0				0	
	Left-Right		0							0				0				0	
SOUTHBOUND	Left	89	2	**49**	0	89	**49**	0	93	2	**51**	0	93	2	**51**	0	93	2	**51**
	Left-Through		0							0				0				0	
	Through	380	1	256	0	380	256	1	398	1	268	0	398	1	268	0	398	1	268
	Through-Right		1							1				1				1	
	Right	131	0	131	0	131	131	0	137	0	137	0	137	0	137	0	137	0	137
	Left-Through-Right		0							0				0				0	
	Left-Right		0							0				0				0	
EASTBOUND	Left	114	1	**114**	0	114	**114**	0	119	1	**119**	0	119	1	**119**	0	119	1	**119**
	Left-Through		0							0				0				0	
	Through	243	1	202	0	243	202	0	254	1	211	0	254	1	211	0	254	1	211
	Through-Right		1							1				1				1	
	Right	160	0	160	0	160	160	0	167	0	167	0	167	0	167	0	167	0	167
	Left-Through-Right		0							0				0				0	
	Left-Right		0							0				0				0	
WESTBOUND	Left	91	1	91	0	91	91	0	95	1	95	0	95	1	95	0	95	1	95
	Left-Through		0							0				0				0	
	Through	265	1	**265**	0	265	**265**	0	277	1	**277**	0	277	1	**277**	0	277	1	**277**
	Through-Right		0							0				0				0	
	Right	117	1	93	0	117	93	0	122	1	97	0	122	1	97	0	122	1	97
	Left-Through-Right		0							0				0				0	
	Left-Right		0							0				0				0	
CRITICAL VOLUMES		*North-South:*		333	*North-South:*		358	*North-South:*			348	*North-South:*			373	*North-South:*			373
		East-West:		379	*East-West:*		379	*East-West:*			396	*East-West:*			396	*East-West:*			396
		SUM:		712	*SUM:*		737	*SUM:*			744	*SUM:*			769	*SUM:*			769
VOLUME/CAPACITY *(V/C)* RATIO:				0.500			0.517				0.522				0.540				0.540
V/C LESS ATSAC/ATCS ADJUSTMENT:				**0.400**			**0.417**				**0.422**				**0.440**				**0.440**
LEVEL OF SERVICE (LOS):				**A**			**A**				**A**				**A**				**A**

REMARKS: Alt. Route 2: Using only Boulevard Pit

Version: 1i Beta; 8/4/2011

PROJECT IMPACT

Change in *v/c* due to project:	0.018	Δ*v/c* after mitigation:	0.018
Significant impacted?	NO	Fully mitigated?	N/A

Level of Service Workheet
(Circular 212 Method)

I/S #:	North-South Street:	Laurel Canyon Boulevard	Year of Count:	2015	Ambient Growth: (%):	1.5	Conducted by:	City Traffic Counters	Date:	4/28/2015
CMA5	East-West Street:	Branford Street	Projection Year:	2018	Peak Hour:	PM	Reviewed by:		Project:	Pacoima Reservoir Project/1-13-4

No. of Phases				3				3				3				3				3		
Opposed Ø'ing: N/S-1, E/W-2 or Both-3?				0				0				0				0				0		
Right Turns: FREE-1, NRTOR-2 or OLA-3?	NB--	0	SB--	0	NB--	0	SB--	0	NB--	0	SB--	0	NB--	0	SB--	0	NB--	0	SB--	0		
	EB--	0	WB--	0	EB--	0	WB--	0	EB--	0	WB--	0	EB--	0	WB--	0	EB--	0	WB--	0		
ATSAC-1 or ATSAC+ATCS-2?				2				2				2				2				2		
Override Capacity				0				0				0				0				0		

	MOVEMENT	EXISTING CONDITION			EXISTING PLUS PROJECT			FUTURE CONDITION W/O PROJECT				FUTURE CONDITION W/ PROJECT				FUTURE W/ PROJECT W/ MITIGATION			
		Volume	No. of Lanes	Lane Volume	Project Traffic	Total Volume	Lane Volume	Added Volume	Total Volume	No. of Lanes	Lane Volume	Added Volume	Total Volume	No. of Lanes	Lane Volume	Added Volume	Total Volume	No. of Lanes	Lane Volume
NORTHBOUND	Left	119	2	65	0	119	65	0	124	2	68	0	124	2	68	0	124	2	68
	Left-Through		0							0				0				0	
	Through	852	1	**501**	0	852	**526**	4	895	1	**526**	0	895	1	**551**	0	895	1	**551**
	Through-Right		1							1				1				1	
	Right	150	0	150	50	200	200	0	157	0	157	50	207	0	207	0	207	0	207
	Left-Through-Right		0							0				0				0	
	Left-Right		0							0				0				0	
SOUTHBOUND	Left	99	2	**54**	0	99	**54**	1	105	2	**58**	0	105	2	**58**	0	105	2	**58**
	Left-Through		0							0				0				0	
	Through	473	1	307	0	473	307	6	501	1	327	0	501	1	327	0	501	1	327
	Through-Right		1							1				1				1	
	Right	141	0	141	0	141	141	5	152	0	152	0	152	0	152	0	152	0	152
	Left-Through-Right		0							0				0				0	
	Left-Right		0							0				0				0	
EASTBOUND	Left	153	1	**153**	0	153	**153**	3	163	1	**163**	0	163	1	**163**	0	163	1	**163**
	Left-Through		0							0				0				0	
	Through	402	1	291	0	402	291	0	420	1	304	0	420	1	304	0	420	1	304
	Through-Right		1							1				1				1	
	Right	179	0	179	0	179	179	0	187	0	187	0	187	0	187	0	187	0	187
	Left-Through-Right		0							0				0				0	
	Left-Right		0							0				0				0	
WESTBOUND	Left	157	1	157	0	157	157	0	164	1	164	0	164	1	164	0	164	1	164
	Left-Through		0							0				0				0	
	Through	447	1	**447**	0	447	**447**	0	467	1	**467**	0	467	1	**467**	0	467	1	**467**
	Through-Right		0							0				0				0	
	Right	151	1	124	0	151	124	1	159	1	130	0	159	1	130	0	159	1	130
	Left-Through-Right		0							0				0				0	
	Left-Right		0							0				0				0	
CRITICAL VOLUMES			*North-South:*	555		*North-South:*	580		*North-South:*	584			*North-South:*	609			*North-South:*	609	
			East-West:	600		*East-West:*	600		*East-West:*	630			*East-West:*	630			*East-West:*	630	
			SUM:	1155		*SUM:*	1180		*SUM:*	1214			*SUM:*	1239			*SUM:*	1239	
VOLUME/CAPACITY *(V/C)* RATIO:				0.811			0.828			0.852				0.869				0.869	
V/C LESS ATSAC/ATCS ADJUSTMENT:				**0.711**			**0.728**			**0.752**				**0.769**				**0.769**	
LEVEL OF SERVICE (LOS):				**C**			**C**			**C**				**C**				**C**	

REMARKS: Alt. Route 2: Using only Boulevard Pit

Version: 1i Beta; 8/4/2011

PROJECT IMPACT

Change in *v/c* due to project:	0.017	Δ*v/c* after mitigation:	0.017
Significant impacted?	NO	Fully mitigated?	N/A

Level of Service Workheet
(Circular 212 Method)

I/S #:	North-South Street:	San Fernando Road	Year of Count:	2015	Ambient Growth: (%):	1.5	Conducted by:	City Traffic Counters	Date:	4/28/2015
CMA6	East-West Street:	Branford Street	Projection Year:	2018	Peak Hour:	AM	Reviewed by:		Project:	Pacoima Reservoir Project/1-13-4

No. of Phases				4				4				4				4				4			
Opposed Ø'ing: N/S-1, E/W-2 or Both-3?				0				0				0				0				0			
Right Turns: FREE-1, NRTOR-2 or OLA-3?	NB--	0	SB--	0	NB--	0	SB--	0	NB--	0	SB--	0	NB--	0	SB--	0	NB--	0	SB--	0			
	EB--	0	WB--	0	EB--	0	WB--	0	EB--	0	WB--	0	EB--	0	WB--	0	EB--	0	WB--	0			
ATSAC-1 or ATSAC+ATCS-2?				2				2				2				2				2			
Override Capacity				0				0				0				0				0			

	MOVEMENT	EXISTING CONDITION			EXISTING PLUS PROJECT			FUTURE CONDITION W/O PROJECT				FUTURE CONDITION W/ PROJECT				FUTURE W/ PROJECT W/ MITIGATION			
		Volume	No. of Lanes	Lane Volume	Project Traffic	Total Volume	Lane Volume	Added Volume	Total Volume	No. of Lanes	Lane Volume	Added Volume	Total Volume	No. of Lanes	Lane Volume	Added Volume	Total Volume	No. of Lanes	Lane Volume
NORTHBOUND	Left	99	1	**99**	0	99	**99**	0	104	1	**104**	0	104	1	**104**	0	104	1	**104**
	Left-Through		0							0				0				0	
	Through	405	1	282	0	405	282	4	427	1	297	0	427	1	297	0	427	1	297
	Through-Right		1							1				1				1	
	Right	159	0	159	0	159	159	0	166	0	166	0	166	0	166	0	166	0	166
	Left-Through-Right		0							0				0				0	
	Left-Right		0							0				0				0	
SOUTHBOUND	Left	81	1	81	0	81	81	0	85	1	85	0	85	1	85	0	85	1	85
	Left-Through		0							0				0				0	
	Through	965	1	**540**	20	985	**550**	8	1017	1	**569**	20	1037	1	**579**	0	1037	1	**579**
	Through-Right		1							1				1				1	
	Right	115	0	115	0	115	115	0	120	0	120	0	120	0	120	0	120	0	120
	Left-Through-Right		0							0				0				0	
	Left-Right		0							0				0				0	
EASTBOUND	Left	66	1	66	20	86	86	0	69	1	69	20	89	1	89	0	89	1	89
	Left-Through		0							0				0				0	
	Through	408	1	**408**	0	408	**408**	0	427	1	**427**	0	427	1	**427**	0	427	1	**427**
	Through-Right		0							0				0				0	
	Right	209	1	160	30	239	190	0	219	1	167	30	249	1	197	0	249	1	197
	Left-Through-Right		0							0				0				0	
	Left-Right		0							0				0				0	
WESTBOUND	Left	117	0	**117**	0	117	**117**	0	122	0	**122**	0	122	0	**122**	0	122	0	**122**
	Left-Through		0							0				0				0	
	Through	270	0	436	0	270	436	0	282	0	455	0	282	0	455	0	282	0	455
	Through-Right		0							0				0				0	
	Right	49	0	0	0	49	0	0	51	0	0	0	51	0	0	0	51	0	0
	Left-Through-Right		1							1				1				1	
	Left-Right		0							0				0				0	
CRITICAL VOLUMES		North-South:		639	North-South:		649	North-South:			673	North-South:			683	North-South:			683
		East-West:		525	East-West:		525	East-West:			549	East-West:			549	East-West:			549
		SUM:		1164	SUM:		1174	SUM:			1222	SUM:			1232	SUM:			1232
VOLUME/CAPACITY (V/C) RATIO:				0.847			0.854				0.889				0.896				0.896
V/C LESS ATSAC/ATCS ADJUSTMENT:				**0.747**			**0.754**				**0.789**				**0.796**				**0.796**
LEVEL OF SERVICE (LOS):				**C**			**C**				**C**				**C**				**C**

REMARKS: Alt. Route 2: Using only Boulevard Pit

Version: 1i Beta; 8/4/2011

PROJECT IMPACT

Change in *v/c* due to project:	0.007	Δ*v/c* after mitigation:	0.007
Significant impacted?	NO	Fully mitigated?	N/A

Level of Service Workheet
(Circular 212 Method)

I/S #:	North-South Street:	San Fernando Road	Year of Count:	2015	Ambient Growth: (%):	1.5	Conducted by:	City Traffic Counters	Date:	4/28/2015
CMA6	East-West Street:	Branford Street	Projection Year:	2018	Peak Hour:	Mid-Day	Reviewed by:		Project:	Pacoima Reservoir Project/1-13-4

No. of Phases				4				4				4				4				4			4
Opposed Ø'ing: N/S-1, E/W-2 or Both-3?				0				0				0				0				0			0
Right Turns: FREE-1, NRTOR-2 or OLA-3?	NB--	0	SB--	0	NB--	0	SB--	0	NB--	0	SB--	0	NB--	0	SB--	0	NB--	0	SB--	0	NB--	0	SB--	0
	EB--	0	WB--	0	EB--	0	WB--	0	EB--	0	WB--	0	EB--	0	WB--	0	EB--	0	WB--	0	EB--	0	WB--	0
ATSAC-1 or ATSAC+ATCS-2?				2				2				2				2				2			2
Override Capacity				0				0				0				0				0			0

	MOVEMENT	EXISTING CONDITION			EXISTING PLUS PROJECT			FUTURE CONDITION W/O PROJECT				FUTURE CONDITION W/ PROJECT				FUTURE W/ PROJECT W/ MITIGATION			
		Volume	No. of Lanes	Lane Volume	Project Traffic	Total Volume	Lane Volume	Added Volume	Total Volume	No. of Lanes	Lane Volume	Added Volume	Total Volume	No. of Lanes	Lane Volume	Added Volume	Total Volume	No. of Lanes	Lane Volume
NORTHBOUND	Left	61	1	61	0	61	61	0	64	1	64	0	64	1	64	0	64	1	64
	Left-Through		0							0				0				0	
	Through	442	1	**297**	0	442	**297**	8	470	1	**315**	0	470	1	**315**	0	470	1	**315**
	Through-Right		1							1				1				1	
	Right	152	0	152	0	152	152	0	159	0	159	0	159	0	159	0	159	0	159
	Left-Through-Right		0							0				0				0	
	Left-Right		0							0				0				0	
SOUTHBOUND	Left	82	1	**82**	0	82	**82**	0	86	1	**86**	0	86	1	**86**	0	86	1	**86**
	Left-Through		0							0				0				0	
	Through	423	1	254	20	443	264	6	448	1	269	20	468	1	279	0	468	1	279
	Through-Right		1							1				1				1	
	Right	85	0	85	0	85	85	0	89	0	89	0	89	0	89	0	89	0	89
	Left-Through-Right		0							0				0				0	
	Left-Right		0							0				0				0	
EASTBOUND	Left	43	1	**43**	20	63	**63**	0	45	1	**45**	20	65	1	**65**	0	65	1	**65**
	Left-Through		0							0				0				0	
	Through	227	1	227	0	227	227	0	237	1	237	0	237	1	237	0	237	1	237
	Through-Right		0							0				0				0	
	Right	97	1	67	30	127	97	0	101	1	69	30	131	1	99	0	131	1	99
	Left-Through-Right		0							0				0				0	
	Left-Right		0							0				0				0	
WESTBOUND	Left	110	0	110	0	110	110	0	115	0	115	0	115	0	115	0	115	0	115
	Left-Through		0							0				0				0	
	Through	229	0	**412**	0	229	**412**	0	239	0	**430**	0	239	0	**430**	0	239	0	**430**
	Through-Right		0							0				0				0	
	Right	73	0	0	0	73	0	0	76	0	0	0	76	0	0	0	76	0	0
	Left-Through-Right		1							1				1				1	
	Left-Right		0							0				0				0	
CRITICAL VOLUMES		*North-South:*		379	*North-South:*		379	*North-South:*			401	*North-South:*			401	*North-South:*			401
		East-West:		455	*East-West:*		475	*East-West:*			475	*East-West:*			495	*East-West:*			495
		SUM:		834	*SUM:*		854	*SUM:*			876	*SUM:*			896	*SUM:*			896
VOLUME/CAPACITY *(V/C)* RATIO:				0.607			0.621				0.637				0.652				0.652
V/C LESS ATSAC/ATCS ADJUSTMENT:				**0.507**			**0.521**				**0.537**				**0.552**				**0.552**
LEVEL OF SERVICE (LOS):				**A**			**A**				**A**				**A**				**A**

REMARKS: Alt. Route 2: Using only Boulevard Pit

Version: 1i Beta; 8/4/2011

PROJECT IMPACT

Change in *v/c* due to project:	0.015	Δ*v/c* after mitigation:	0.015
Significant impacted?	NO	Fully mitigated?	N/A

Level of Service Workheet
(Circular 212 Method)

I/S #:	North-South Street:	San Fernando Road	Year of Count:	2015	Ambient Growth: (%):	1.5	Conducted by:	City Traffic Counters	Date:	4/28/2015
CMA6	East-West Street:	Branford Street	Projection Year:	2018	Peak Hour:	PM	Reviewed by:		Project:	Pacoima Reservoir Project/1-13-4

No. of Phases				4				4				4				4				4			
Opposed Ø'ing: N/S-1, E/W-2 or Both-3?				0				0				0				0				0			
Right Turns: FREE-1, NRTOR-2 or OLA-3?	NB--	0	SB--	0	NB--	0	SB--	0	NB--	0	SB--	0	NB--	0	SB--	0	NB--	0	SB--	0			
	EB--	0	WB--	0	EB--	0	WB--	0	EB--	0	WB--	0	EB--	0	WB--	0	EB--	0	WB--	0			
ATSAC-1 or ATSAC+ATCS-2?				2				2				2				2				2			
Override Capacity				0				0				0				0				0			

	MOVEMENT	EXISTING CONDITION			EXISTING PLUS PROJECT			FUTURE CONDITION W/O PROJECT				FUTURE CONDITION W/ PROJECT				FUTURE W/ PROJECT W/ MITIGATION			
		Volume	No. of Lanes	Lane Volume	Project Traffic	Total Volume	Lane Volume	Added Volume	Total Volume	No. of Lanes	Lane Volume	Added Volume	Total Volume	No. of Lanes	Lane Volume	Added Volume	Total Volume	No. of Lanes	Lane Volume
NORTHBOUND	Left	104	1	104	0	104	104	0	109	1	109	0	109	1	109	0	109	1	109
	Left-Through		0							0				0				0	
	Through	681	1	**403**	0	681	**403**	8	720	1	**425**	0	720	1	**425**	0	720	1	**425**
	Through-Right		1							1				1				1	
	Right	124	0	124	0	124	124	0	130	0	130	0	130	0	130	0	130	0	130
	Left-Through-Right		0							0				0				0	
	Left-Right		0							0				0				0	
SOUTHBOUND	Left	58	1	**58**	0	58	**58**	0	61	1	**61**	0	61	1	**61**	0	61	1	**61**
	Left-Through		0							0				0				0	
	Through	374	1	229	20	394	239	6	397	1	243	20	417	1	253	0	417	1	253
	Through-Right		1							1				1				1	
	Right	84	0	84	0	84	84	0	88	0	88	0	88	0	88	0	88	0	88
	Left-Through-Right		0							0				0				0	
	Left-Right		0							0				0				0	
EASTBOUND	Left	61	1	**61**	20	81	**81**	0	64	1	**64**	20	84	1	**84**	0	84	1	**84**
	Left-Through		0							0				0				0	
	Through	264	1	264	0	264	264	0	276	1	276	0	276	1	276	0	276	1	276
	Through-Right		0							0				0				0	
	Right	68	1	16	30	98	46	0	71	1	17	30	101	1	47	0	101	1	47
	Left-Through-Right		0							0				0				0	
	Left-Right		0							0				0				0	
WESTBOUND	Left	113	0	113	0	113	113	0	118	0	118	0	118	0	118	0	118	0	118
	Left-Through		0							0				0				0	
	Through	314	0	**484**	0	314	**484**	0	328	0	**506**	0	328	0	**506**	0	328	0	**506**
	Through-Right		0							0				0				0	
	Right	57	0	0	0	57	0	0	60	0	0	0	60	0	0	0	60	0	0
	Left-Through-Right		1							1				1				1	
	Left-Right		0							0				0				0	
CRITICAL VOLUMES			*North-South:*	461		*North-South:*	461			*North-South:*	486			*North-South:*	486			*North-South:*	486
			East-West:	545		*East-West:*	565			*East-West:*	570			*East-West:*	590			*East-West:*	590
			SUM:	1006		*SUM:*	1026			*SUM:*	1056			*SUM:*	1076			*SUM:*	1076
VOLUME/CAPACITY *(V/C)* RATIO:				0.732			0.746				0.768				0.783				0.783
V/C LESS ATSAC/ATCS ADJUSTMENT:				**0.632**			**0.646**				**0.668**				**0.683**				**0.683**
LEVEL OF SERVICE (LOS):				**B**			**B**				**B**				**B**				**B**

REMARKS: Alt. Route 2: Using only Boulevard Pit

Version: 1i Beta; 8/4/2011

PROJECT IMPACT

Change in *v/c* due to project:	0.015	Δ*v/c* after mitigation:	0.015
Significant impacted?	NO	Fully mitigated?	N/A

Level of Service Workheet
(Circular 212 Method)

I/S #:	North-South Street:	Laurel Canyon Boulevard	Year of Count:	2015	Ambient Growth: (%):	1.5	Conducted by:	City Traffic Counters	Date:	4/28/2015
CMA7	East-West Street:	I-5 Freeway NB Off-Ramp	Projection Year:	2018	Peak Hour:	AM	Reviewed by:		Project:	Pacoima Reservoir Project/1-13-4

No. of Phases				0				0				0				0				0			0
Opposed Ø'ing: N/S-1, E/W-2 or Both-3?				0				0				0				0				0			0
Right Turns: FREE-1, NRTOR-2 or OLA-3?	NB--	0	SB--	0	NB--	0	SB--	0	NB--	0	SB--	0	NB--	0	SB--	0	NB--	0	SB--	0	NB--	0	SB-- 0
	EB--	0	WB--	0	EB--	0	WB--	0	EB--	0	WB--	0	EB--	0	WB--	0	EB--	0	WB--	0	EB--	0	WB-- 0
ATSAC-1 or ATSAC+ATCS-2?				0				0				0				0				0			0
Override Capacity				1200				1200				1200				1200				1200			1200

MOVEMENT		EXISTING CONDITION			EXISTING PLUS PROJECT			FUTURE CONDITION W/O PROJECT				FUTURE CONDITION W/ PROJECT				FUTURE W/ PROJECT W/ MITIGATION			
		Volume	No. of Lanes	Lane Volume	Project Traffic	Total Volume	Lane Volume	Added Volume	Total Volume	No. of Lanes	Lane Volume	Added Volume	Total Volume	No. of Lanes	Lane Volume	Added Volume	Total Volume	No. of Lanes	Lane Volume
NORTHBOUND	Left	0	0	**0**	0	0	**0**	0	0	0	**0**	0	0	0	**0**	0	0	0	**0**
	Left-Through		0							0				0				0	
	Through	535	1	278	50	585	303	12	571	1	297	50	621	1	322	0	621	1	322
	Through-Right		1							1				1				1	
	Right	21	0	21	0	21	21	0	22	0	22	0	22	0	22	0	22	0	22
	Left-Through-Right		0							0				0				0	
	Left-Right		0							0				0				0	
SOUTHBOUND	Left	79	1	79	0	79	79	0	83	1	83	0	83	1	83	0	83	1	83
	Left-Through		0							0				0				0	
	Through	1279	2	**640**	0	1279	**640**	8	1345	2	**673**	0	1345	2	**673**	0	1345	2	**673**
	Through-Right		0							0				0				0	
	Right	0	0	0	0	0	0	0	0	0	0	0	0	0	0	0	0	0	0
	Left-Through-Right		0							0				0				0	
	Left-Right		0							0				0				0	
EASTBOUND	Left	27	0	27	0	27	27	0	28	0	28	0	28	0	28	0	28	0	28
	Left-Through		1							1				1				1	
	Through	5	0	32	0	5	32	0	5	0	33	0	5	0	33	0	5	0	33
	Through-Right		0							0				0				0	
	Right	273	1	**273**	0	273	**273**	0	285	1	**285**	0	285	1	**285**	0	285	1	**285**
	Left-Through-Right		0							0				0				0	
	Left-Right		0							0				0				0	
WESTBOUND	Left	21	0	**21**	0	21	**21**	0	22	0	**22**	0	22	0	**22**	0	22	0	**22**
	Left-Through		0							0				0				0	
	Through	0	0	94	0	0	94	0	0	0	98	0	0	0	98	0	0	0	98
	Through-Right		0							0				0				0	
	Right	73	0	0	0	73	0	0	76	0	0	0	76	0	0	0	76	0	0
	Left-Through-Right		1							1				1				1	
	Left-Right		0							0				0				0	
CRITICAL VOLUMES		*North-South:*		640	*North-South:*		640	*North-South:*			673	*North-South:*			673	*North-South:*			673
		East-West:		294	*East-West:*		294	*East-West:*			307	*East-West:*			307	*East-West:*			307
		SUM:		934	*SUM:*		934	*SUM:*			980	*SUM:*			980	*SUM:*			980
VOLUME/CAPACITY *(V/C)* RATIO:				0.778			0.778				0.817				0.817				0.817
V/C LESS ATSAC/ATCS ADJUSTMENT:				0.778			0.778				0.817				0.817				0.817
LEVEL OF SERVICE (LOS):				C			C				D				D				D

REMARKS: Alt. Route 2: Using only Boulevard Pit

Version: 1i Beta; 8/4/2011

PROJECT IMPACT

Change in *v/c* due to project:	0.000	Δ*v/c* after mitigation:	0.000
Significant impacted?	NO	Fully mitigated?	N/A

Level of Service Workheet
(Circular 212 Method)

I/S #:	North-South Street:	Laurel Canyon Boulevard	Year of Count:	2015	Ambient Growth: (%):	1.5	Conducted by:	City Traffic Counters	Date:	4/28/2015
CMA7	East-West Street:	I-5 Freeway NB Off-Ramp	Projection Year:	2018	Peak Hour:	Mid-Day	Reviewed by:		Project:	Pacoima Reservoir Project/1-13-4

No. of Phases				0				0				0				0				0	
Opposed Ø'ing: N/S-1, E/W-2 or Both-3?				0				0				0				0				0	
Right Turns: FREE-1, NRTOR-2 or OLA-3?	NB--	0	SB--	0	NB--	0	SB--	0	NB--	0	SB--	0	NB--	0	SB--	0	NB--	0	SB--	0	
	EB--	0	WB--	0	EB--	0	WB--	0	EB--	0	WB--	0	EB--	0	WB--	0	EB--	0	WB--	0	
ATSAC-1 or ATSAC+ATCS-2?				0				0				0				0				0	
Override Capacity				1200				1200				1200				1200				1200	

MOVEMENT		EXISTING CONDITION			EXISTING PLUS PROJECT			FUTURE CONDITION W/O PROJECT				FUTURE CONDITION W/ PROJECT				FUTURE W/ PROJECT W/ MITIGATION			
		Volume	No. of Lanes	Lane Volume	Project Traffic	Total Volume	Lane Volume	Added Volume	Total Volume	No. of Lanes	Lane Volume	Added Volume	Total Volume	No. of Lanes	Lane Volume	Added Volume	Total Volume	No. of Lanes	Lane Volume
NORTHBOUND	Left	0	0	**0**	0	0	0	0	0	0	**0**	0	0	0	0	0	0	0	0
	Left-Through		0							0				0				0	
	Through	386	1	207	50	436	**232**	1	405	1	217	50	455	1	**242**	0	455	1	**242**
	Through-Right		1							1				1				1	
	Right	28	0	28	0	28	28	0	29	0	29	0	29	0	29	0	29	0	29
	Left-Through-Right		0							0				0				0	
	Left-Right		0							0				0				0	
SOUTHBOUND	Left	28	1	28	0	28	**28**	0	29	1	29	0	29	1	**29**	0	29	1	**29**
	Left-Through		0							0				0				0	
	Through	499	2	**250**	0	499	250	1	523	2	**262**	0	523	2	262	0	523	2	262
	Through-Right		0							0				0				0	
	Right	0	0	0	0	0	0	0	0	0	0	0	0	0	0	0	0	0	0
	Left-Through-Right		0							0				0				0	
	Left-Right		0							0				0				0	
EASTBOUND	Left	40	0	40	0	40	40	0	42	0	42	0	42	0	42	0	42	0	42
	Left-Through		1							1				1				1	
	Through	7	0	47	0	7	47	0	7	0	49	0	7	0	49	0	7	0	49
	Through-Right		0							0				0				0	
	Right	142	1	**142**	0	142	**142**	0	148	1	**148**	0	148	1	**148**	0	148	1	**148**
	Left-Through-Right		0							0				0				0	
	Left-Right		0							0				0				0	
WESTBOUND	Left	17	0	**17**	0	17	**17**	0	18	0	**18**	0	18	0	**18**	0	18	0	**18**
	Left-Through		0							0				0				0	
	Through	0	0	41	0	0	41	0	0	0	43	0	0	0	43	0	0	0	43
	Through-Right		0							0				0				0	
	Right	24	0	0	0	24	0	0	25	0	0	0	25	0	0	0	25	0	0
	Left-Through-Right		1							1				1				1	
	Left-Right		0							0				0				0	
CRITICAL VOLUMES			*North-South:*	250		*North-South:*	260			*North-South:*	262			*North-South:*	271			*North-South:*	271
			East-West:	159		*East-West:*	159			*East-West:*	166			*East-West:*	166			*East-West:*	166
			SUM:	409		*SUM:*	419			*SUM:*	428			*SUM:*	437			*SUM:*	437
VOLUME/CAPACITY *(V/C)* RATIO:				0.341			0.349				0.357				0.364				0.364
V/C LESS ATSAC/ATCS ADJUSTMENT:				0.341			0.349				0.357				0.364				0.364
LEVEL OF SERVICE (LOS):				**A**			**A**				**A**				**A**				**A**

REMARKS: Alt. Route 2: Using only Boulevard Pit

Version: 1i Beta; 8/4/2011

PROJECT IMPACT

Change in *v/c* due to project:	0.007	Δ*v/c* after mitigation:	0.007
Significant impacted?	NO	Fully mitigated?	N/A

Level of Service Workheet
(Circular 212 Method)

I/S #:	North-South Street:	Laurel Canyon Boulevard	Year of Count:	2015	Ambient Growth: (%):	1.5	Conducted by:	City Traffic Counters	Date:	4/28/2015
CMA7	East-West Street:	I-5 Freeway NB Off-Ramp	Projection Year:	2018	Peak Hour:	PM	Reviewed by:		Project:	Pacoima Reservoir Project/1-13-4

No. of Phases				0				0				0				0				0			0
Opposed Ø'ing: N/S-1, E/W-2 or Both-3?				0				0				0				0				0			0
Right Turns: FREE-1, NRTOR-2 or OLA-3?	NB--	0	SB--	0	NB--	0	SB--	0	NB--	0	SB--	0	NB--	0	SB--	0	NB--	0	SB--	0	NB--	0	SB-- 0
	EB--	0	WB--	0	EB--	0	WB--	0	EB--	0	WB--	0	EB--	0	WB--	0	EB--	0	WB--	0	EB--	0	WB-- 0
ATSAC-1 or ATSAC+ATCS-2?				0				0				0				0				0			0
Override Capacity				1200				1200				1200				1200				1200			1200

MOVEMENT		EXISTING CONDITION			EXISTING PLUS PROJECT			FUTURE CONDITION W/O PROJECT				FUTURE CONDITION W/ PROJECT				FUTURE W/ PROJECT W/ MITIGATION			
		Volume	No. of Lanes	Lane Volume	Project Traffic	Total Volume	Lane Volume	Added Volume	Total Volume	No. of Lanes	Lane Volume	Added Volume	Total Volume	No. of Lanes	Lane Volume	Added Volume	Total Volume	No. of Lanes	Lane Volume
NORTHBOUND	Left	0	0	0	0	0	0	0	0	0	0	0	0	0	0	0	0	0	0
	Left-Through		0							0				0				0	
	Through	1013	1	**522**	50	1063	**547**	4	1063	1	**547**	50	1113	1	**572**	0	1113	1	**572**
	Through-Right		1							1				1				1	
	Right	30	0	30	0	30	30	0	31	0	31	0	31	0	31	0	31	0	31
	Left-Through-Right		0							0				0				0	
	Left-Right		0							0				0				0	
SOUTHBOUND	Left	44	1	**44**	0	44	**44**	0	46	1	**46**	0	46	1	**46**	0	46	1	**46**
	Left-Through		0							0				0				0	
	Through	763	2	382	0	763	382	6	804	2	402	0	804	2	402	0	804	2	402
	Through-Right		0							0				0				0	
	Right	0	0	0	0	0	0	0	0	0	0	0	0	0	0	0	0	0	0
	Left-Through-Right		0							0				0				0	
	Left-Right		0							0				0				0	
EASTBOUND	Left	53	0	53	0	53	53	0	55	0	55	0	55	0	55	0	55	0	55
	Left-Through		1							1				1				1	
	Through	16	0	69	0	16	69	0	17	0	72	0	17	0	72	0	17	0	72
	Through-Right		0							0				0				0	
	Right	200	1	**200**	0	200	**200**	0	209	1	**209**	0	209	1	**209**	0	209	1	**209**
	Left-Through-Right		0							0				0				0	
	Left-Right		0							0				0				0	
WESTBOUND	Left	19	0	**19**	0	19	**19**	0	20	0	**20**	0	20	0	**20**	0	20	0	**20**
	Left-Through		0							0				0				0	
	Through	0	0	65	0	0	65	0	0	0	68	0	0	0	68	0	0	0	68
	Through-Right		0							0				0				0	
	Right	46	0	0	0	46	0	0	48	0	0	0	48	0	0	0	48	0	0
	Left-Through-Right		1							1				1				1	
	Left-Right		0							0				0				0	
CRITICAL VOLUMES		*North-South:*		566	*North-South:*		591	*North-South:*			593	*North-South:*			618	*North-South:*			618
		East-West:		219	*East-West:*		219	*East-West:*			229	*East-West:*			229	*East-West:*			229
		SUM:		785	*SUM:*		810	*SUM:*			822	*SUM:*			847	*SUM:*			847
VOLUME/CAPACITY *(V/C)* RATIO:				0.654			0.675				0.685				0.706				0.706
V/C LESS ATSAC/ATCS ADJUSTMENT:				0.654			0.675				0.685				0.706				0.706
LEVEL OF SERVICE (LOS):				B			B				B				C				C

REMARKS: Alt. Route 2: Using only Boulevard Pit

Version: 1i Beta; 8/4/2011

PROJECT IMPACT

Change in *v/c* due to project:	0.021	Δ*v/c* after mitigation:	0.021
Significant impacted?	NO	Fully mitigated?	N/A

Level of Service Workheet
(Circular 212 Method)

I/S #:	North-South Street:	Laurel Canyon Boulevard	Year of Count:	2015	Ambient Growth: (%):	1.5	Conducted by:	City Traffic Counters	Date:	4/28/2015
CMA8	East-West Street:	Sheldon Street	Projection Year:	2018	Peak Hour:	AM	Reviewed by:		Project:	Pacoima Reservoir Project/1-13-4

	Existing Condition	Existing Plus Project	Future Condition W/O Project	Future Condition W/ Project	Future W/ Project W/ Mitigation
No. of Phases	2	2	2	2	2
Opposed Ø'ing: N/S-1, E/W-2 or Both-3?	0	0	0	0	0
Right Turns: FREE-1, NRTOR-2 or OLA-3?	NB-- 0 SB-- 0 EB-- 0 WB-- 0	NB-- 0 SB-- 0 EB-- 0 WB-- 0	NB-- 0 SB-- 0 EB-- 0 WB-- 0	NB-- 0 SB-- 0 EB-- 0 WB-- 0	NB-- 0 SB-- 0 EB-- 0 WB-- 0
ATSAC-1 or ATSAC+ATCS-2?	2	2	2	2	2
Override Capacity	0	0	0	0	0

	MOVEMENT	Existing Condition Volume	No. of Lanes	Lane Volume	Existing Plus Project Project Traffic	Total Volume	Lane Volume	Future Condition W/O Project Added Volume	Total Volume	No. of Lanes	Lane Volume	Future Condition W/ Project Added Volume	Total Volume	No. of Lanes	Lane Volume	Future W/ Project W/ Mitigation Added Volume	Total Volume	No. of Lanes	Lane Volume
NORTHBOUND	Left	47	1	**47**	0	47	**47**	0	49	1	**49**	0	49	1	**49**	0	49	1	**49**
	Left-Through		0							0				0				0	
	Through	347	2	174	30	377	189	12	375	2	188	30	405	2	203	0	405	2	203
	Through-Right		0							0				0				0	
	Right	220	1	175	0	220	175	0	230	1	183	0	230	1	183	0	230	1	183
	Left-Through-Right		0							0				0				0	
	Left-Right		0							0				0				0	
SOUTHBOUND	Left	152	1	152	0	152	152	0	159	1	159	0	159	1	159	0	159	1	159
	Left-Through		0							0				0				0	
	Through	1202	1	**705**	0	1202	**705**	8	1265	1	**742**	0	1265	1	**742**	0	1265	1	**742**
	Through-Right		1							1				1				1	
	Right	208	0	208	0	208	208	0	218	0	218	0	218	0	218	0	218	0	218
	Left-Through-Right		0							0				0				0	
	Left-Right		0							0				0				0	
EASTBOUND	Left	129	1	**129**	0	129	**129**	0	135	1	**135**	0	135	1	**135**	0	135	1	**135**
	Left-Through		0							0				0				0	
	Through	804	1	462	0	804	462	0	841	1	483	0	841	1	483	0	841	1	483
	Through-Right		1							1				1				1	
	Right	119	0	119	0	119	119	0	124	0	124	0	124	0	124	0	124	0	124
	Left-Through-Right		0							0				0				0	
	Left-Right		0							0				0				0	
WESTBOUND	Left	91	1	91	0	91	91	0	95	1	95	0	95	1	95	0	95	1	95
	Left-Through		0							0				0				0	
	Through	857	1	**487**	0	857	**497**	0	896	1	**509**	0	896	1	**519**	0	896	1	**519**
	Through-Right		1							1				1				1	
	Right	116	0	116	20	136	136	0	121	0	121	20	141	0	141	0	141	0	141
	Left-Through-Right		0							0				0				0	
	Left-Right		0							0				0				0	

CRITICAL VOLUMES	Existing Condition	Existing Plus Project	Future Condition W/O Project	Future Condition W/ Project	Future W/ Project W/ Mitigation
North-South:	752	752	791	791	791
East-West:	616	626	644	654	654
SUM:	1368	1378	1435	1445	1445
VOLUME/CAPACITY (V/C) RATIO:	0.912	0.919	0.957	0.963	0.963
V/C LESS ATSAC/ATCS ADJUSTMENT:	**0.812**	**0.819**	**0.857**	**0.863**	**0.863**
LEVEL OF SERVICE (LOS):	**D**	**D**	**D**	**D**	**D**

REMARKS: Alt. Route 2: Using only Boulevard Pit

Version: 1i Beta; 8/4/2011

PROJECT IMPACT

Change in *v/c* due to project:	0.006	Δ*v/c* after mitigation:	0.006
Significant impacted?	NO	Fully mitigated?	N/A

Level of Service Workheet
(Circular 212 Method)

I/S #:	North-South Street:	Laurel Canyon Boulevard	Year of Count:	2015	Ambient Growth: (%):	1.5	Conducted by:	City Traffic Counters	Date:	4/28/2015
CMA8	East-West Street:	Sheldon Street	Projection Year:	2018	Peak Hour:	Mid-Day	Reviewed by:		Project:	Pacoima Reservoir Project/1-13-4

	Existing Condition	Existing Plus Project	Future Condition W/O Project	Future Condition W/ Project	Future W/ Project W/ Mitigation
No. of Phases	2	2	2	2	2
Opposed Ø'ing: N/S-1, E/W-2 or Both-3?	0	0	0	0	0
Right Turns: FREE-1, NRTOR-2 or OLA-3?	NB-- 0 SB-- 0 EB-- 0 WB-- 0	NB-- 0 SB-- 0 EB-- 0 WB-- 0	NB-- 0 SB-- 0 EB-- 0 WB-- 0	NB-- 0 SB-- 0 EB-- 0 WB-- 0	NB-- 0 SB-- 0 EB-- 0 WB-- 0
ATSAC-1 or ATSAC+ATCS-2?	2	2	2	2	2
Override Capacity	0	0	0	0	0

	MOVEMENT	Existing Condition Volume	No. of Lanes	Lane Volume	Existing Plus Project Project Traffic	Total Volume	Lane Volume	Future Cond. W/O Project Added Volume	Total Volume	No. of Lanes	Lane Volume	Future Cond. W/ Project Added Volume	Total Volume	No. of Lanes	Lane Volume	Future W/ Project W/ Mitigation Added Volume	Total Volume	No. of Lanes	Lane Volume
NORTHBOUND	Left	16	1	**16**	0	16	**16**	0	17	1	**17**	0	17	1	**17**	0	17	1	**17**
	Left-Through		0							0				0				0	
	Through	261	2	131	30	291	146	1	274	2	137	30	304	2	152	0	304	2	152
	Through-Right		0							0				0				0	
	Right	221	1	165	0	221	165	0	231	1	172	0	231	1	172	0	231	1	172
	Left-Through-Right		0							0				0				0	
	Left-Right		0							0				0				0	
SOUTHBOUND	Left	117	1	117	0	117	117	0	122	1	122	0	122	1	122	0	122	1	122
	Left-Through		0							0				0				0	
	Through	459	1	**281**	0	459	**281**	1	481	1	**294**	0	481	1	**294**	0	481	1	**294**
	Through-Right		1							1				1				1	
	Right	102	0	102	0	102	102	0	107	0	107	0	107	0	107	0	107	0	107
	Left-Through-Right		0							0				0				0	
	Left-Right		0							0				0				0	
EASTBOUND	Left	58	1	58	0	58	58	0	61	1	61	0	61	1	61	0	61	1	61
	Left-Through		0							0				0				0	
	Through	431	1	**274**	0	431	**274**	0	451	1	**287**	0	451	1	**287**	0	451	1	**287**
	Through-Right		1							1				1				1	
	Right	117	0	117	0	117	117	0	122	0	122	0	122	0	122	0	122	0	122
	Left-Through-Right		0							0				0				0	
	Left-Right		0							0				0				0	
WESTBOUND	Left	113	1	**113**	0	113	**113**	0	118	1	**118**	0	118	1	**118**	0	118	1	**118**
	Left-Through		0							0				0				0	
	Through	363	1	226	0	363	236	0	380	1	236	0	380	1	246	0	380	1	246
	Through-Right		1							1				1				1	
	Right	88	0	88	20	108	108	0	92	0	92	20	112	0	112	0	112	0	112
	Left-Through-Right		0							0				0				0	
	Left-Right		0							0				0				0	
CRITICAL VOLUMES		North-South:		297	North-South:		297	North-South:			311	North-South:			311	North-South:			311
		East-West:		387	East-West:		387	East-West:			405	East-West:			405	East-West:			405
		SUM:		684	SUM:		684	SUM:			716	SUM:			716	SUM:			716
VOLUME/CAPACITY (V/C) RATIO:				0.456			0.456				0.477				0.477				0.477
V/C LESS ATSAC/ATCS ADJUSTMENT:				**0.356**			**0.356**				**0.377**				**0.377**				**0.377**
LEVEL OF SERVICE (LOS):				**A**			**A**				**A**				**A**				**A**

REMARKS: Alt. Route 2: Using only Boulevard Pit

Version: 1i Beta; 8/4/2011

PROJECT IMPACT

Change in *v/c* due to project:	0.000	Δ*v/c* after mitigation:	0.000
Significant impacted?	NO	Fully mitigated?	N/A

Level of Service Workheet
(Circular 212 Method)

I/S #:	North-South Street:	Laurel Canyon Boulevard	Year of Count:	2015	Ambient Growth: (%):	1.5	Conducted by:	City Traffic Counters	Date:	4/28/2015
CMA8	East-West Street:	Sheldon Street	Projection Year:	2018	Peak Hour:	PM	Reviewed by:		Project:	Pacoima Reservoir Project/1-13-4

	Existing Condition	Existing Plus Project	Future Condition W/O Project	Future Condition W/ Project	Future W/ Project W/ Mitigation
No. of Phases	2	2	2	2	2
Opposed Ø'ing: N/S-1, E/W-2 or Both-3?	0	0	0	0	0
Right Turns: FREE-1, NRTOR-2 or OLA-3?	NB-- 0 SB-- 0 EB-- 0 WB-- 0	NB-- 0 SB-- 0 EB-- 0 WB-- 0	NB-- 0 SB-- 0 EB-- 0 WB-- 0	NB-- 0 SB-- 0 EB-- 0 WB-- 0	NB-- 0 SB-- 0 EB-- 0 WB-- 0
ATSAC-1 or ATSAC+ATCS-2?	2	2	2	2	2
Override Capacity	0	0	0	0	0

	MOVEMENT	Existing Condition Volume	No. of Lanes	Lane Volume	Existing Plus Project Project Traffic	Total Volume	Lane Volume	Future Condition W/O Project Added Volume	Total Volume	No. of Lanes	Lane Volume	Future Condition W/ Project Added Volume	Total Volume	No. of Lanes	Lane Volume	Future W/ Project W/ Mitigation Added Volume	Total Volume	No. of Lanes	Lane Volume
NORTHBOUND	Left	18	1	18	0	18	18	0	19	1	19	0	19	1	19	0	19	1	19
	Left-Through		0							0				0				0	
	Through	801	2	**401**	30	831	**416**	4	842	2	**421**	30	872	2	**436**	0	872	2	**436**
	Through-Right		0							0				0				0	
	Right	224	1	179	0	224	179	0	234	1	187	0	234	1	187	0	234	1	187
	Left-Through-Right		0							0				0				0	
	Left-Right		0							0				0				0	
SOUTHBOUND	Left	112	1	**112**	0	112	**112**	0	117	1	**117**	0	117	1	**117**	0	117	1	**117**
	Left-Through		0							0				0				0	
	Through	817	1	435	0	817	435	6	860	1	457	0	860	1	457	0	860	1	457
	Through-Right		1							1				1				1	
	Right	52	0	52	0	52	52	0	54	0	54	0	54	0	54	0	54	0	54
	Left-Through-Right		0							0				0				0	
	Left-Right		0							0				0				0	
EASTBOUND	Left	118	1	118	0	118	118	0	123	1	123	0	123	1	123	0	123	1	123
	Left-Through		0							0				0				0	
	Through	891	1	**483**	0	891	**483**	0	932	1	**505**	0	932	1	**505**	0	932	1	**505**
	Through-Right		1							1				1				1	
	Right	74	0	74	0	74	74	0	77	0	77	0	77	0	77	0	77	0	77
	Left-Through-Right		0							0				0				0	
	Left-Right		0							0				0				0	
WESTBOUND	Left	90	1	**90**	0	90	**90**	0	94	1	**94**	0	94	1	**94**	0	94	1	**94**
	Left-Through		0							0				0				0	
	Through	654	1	374	0	654	384	0	684	1	391	0	684	1	401	0	684	1	401
	Through-Right		1							1				1				1	
	Right	93	0	93	20	113	113	0	97	0	97	20	117	0	117	0	117	0	117
	Left-Through-Right		0							0				0				0	
	Left-Right		0							0				0				0	

CRITICAL VOLUMES	Existing Condition	Existing Plus Project	Future Condition W/O Project	Future Condition W/ Project	Future W/ Project W/ Mitigation
North-South:	513	528	538	553	553
East-West:	573	573	599	599	599
SUM:	1086	1101	1137	1152	1152
VOLUME/CAPACITY (V/C) RATIO:	0.724	0.734	0.758	0.768	0.768
V/C LESS ATSAC/ATCS ADJUSTMENT:	**0.624**	**0.634**	**0.658**	**0.668**	**0.668**
LEVEL OF SERVICE (LOS):	**B**	**B**	**B**	**B**	**B**

REMARKS: Alt. Route 2: Using only Boulevard Pit

Version: 1i Beta; 8/4/2011

PROJECT IMPACT

Change in *v/c* due to project:	0.010	Δ*v/c* after mitigation:	0.010
Significant impacted?	NO	Fully mitigated?	N/A

Level of Service Workheet
(Circular 212 Method)

I/S #:	North-South Street:	Laurel Canyon Boulevard	Year of Count:	2015	Ambient Growth: (%):	1.5	Conducted by:	City Traffic Counters	Date:	4/28/2015
CMA9	East-West Street:	I-5 Freeway SB Ramps	Projection Year:	2018	Peak Hour:	AM	Reviewed by:		Project:	Pacoima Reservoir Project/1-13-4

No. of Phases				0				0				0				0				0			
Opposed Ø'ing: N/S-1, E/W-2 or Both-3?				0				0				0				0				0			
Right Turns: FREE-1, NRTOR-2 or OLA-3?	NB--	0	SB--	0	NB--	0	SB--	0	NB--	0	SB--	0	NB--	0	SB--	0	NB--	0	SB--	0			
	EB--	0	WB--	0	EB--	0	WB--	0	EB--	0	WB--	0	EB--	0	WB--	0	EB--	0	WB--	0			
ATSAC-1 or ATSAC+ATCS-2?				0				0				0				0				0			
Override Capacity				1200				1200				1200				1200				1200			

MOVEMENT		EXISTING CONDITION			EXISTING PLUS PROJECT			FUTURE CONDITION W/O PROJECT				FUTURE CONDITION W/ PROJECT				FUTURE W/ PROJECT W/ MITIGATION			
		Volume	No. of Lanes	Lane Volume	Project Traffic	Total Volume	Lane Volume	Added Volume	Total Volume	No. of Lanes	Lane Volume	Added Volume	Total Volume	No. of Lanes	Lane Volume	Added Volume	Total Volume	No. of Lanes	Lane Volume
NORTHBOUND	Left	0	0	0	0	0	0	0	0	0	0	0	0	0	0	0	0	0	0
	Left-Through		0							0				0				0	
	Through	600	1	**365**	0	600	**365**	12	639	1	**387**	0	639	1	**387**	0	639	1	**387**
	Through-Right		1							1				1				1	
	Right	129	0	129	0	129	129	0	135	0	135	0	135	0	135	0	135	0	135
	Left-Through-Right		0							0				0				0	
	Left-Right		0							0				0				0	
SOUTHBOUND	Left	561	1	**561**	0	561	**561**	0	587	1	**587**	0	587	1	**587**	0	587	1	**587**
	Left-Through		0							0				0				0	
	Through	692	2	346	0	692	346	8	732	2	366	0	732	2	366	0	732	2	366
	Through-Right		0							0				0				0	
	Right	0	0	0	0	0	0	0	0	0	0	0	0	0	0	0	0	0	0
	Left-Through-Right		0							0				0				0	
	Left-Right		0							0				0				0	
EASTBOUND	Left	0	0	0	0	0	0	0	0	0	0	0	0	0	0	0	0	0	0
	Left-Through		0							0				0				0	
	Through	0	0	**0**	0	0	**0**	0	0	0	**0**	0	0	0	**0**	0	0	0	**0**
	Through-Right		0							0				0				0	
	Right	0	0	0	0	0	0	0	0	0	0	0	0	0	0	0	0	0	0
	Left-Through-Right		0							0				0				0	
	Left-Right		0							0				0				0	
WESTBOUND	Left	22	1	**22**	0	22	**22**	0	23	1	**23**	0	23	1	**23**	0	23	1	**23**
	Left-Through		0							0				0				0	
	Through	0	0	0	0	0	0	0	0	0	0	0	0	0	0	0	0	0	0
	Through-Right		0							0				0				0	
	Right	93	1	0	30	123	0	0	97	1	0	30	127	1	0	0	127	1	0
	Left-Through-Right		0							0				0				0	
	Left-Right		0							0				0				0	
CRITICAL VOLUMES		*North-South:*		926	*North-South:*		926	*North-South:*			974	*North-South:*			974	*North-South:*			974
		East-West:		22	*East-West:*		22	*East-West:*			23	*East-West:*			23	*East-West:*			23
		SUM:		948	*SUM:*		948	*SUM:*			997	*SUM:*			997	*SUM:*			997
VOLUME/CAPACITY *(V/C)* RATIO:				0.790			0.790				0.831				0.831				0.831
V/C LESS ATSAC/ATCS ADJUSTMENT:				0.790			0.790				0.831				0.831				0.831
LEVEL OF SERVICE (LOS):				C			C				D				D				D

REMARKS: Alt. Route 2: Using only Boulevard Pit

Version: 1i Beta; 8/4/2011

PROJECT IMPACT

Change in *v/c* due to project:	0.000	Δ*v/c* after mitigation:	0.000
Significant impacted?	NO	Fully mitigated?	N/A

Level of Service Workheet
(Circular 212 Method)

I/S #:	North-South Street:	Laurel Canyon Boulevard	Year of Count:	2015	Ambient Growth: (%):	1.5	Conducted by:	City Traffic Counters	Date:	4/28/2015
CMA9	East-West Street:	I-5 Freeway SB Ramps	Projection Year:	2018	Peak Hour:	Mid-Day	Reviewed by:		Project:	Pacoima Reservoir Project/1-13-4

No. of Phases				0				0				0				0				0	
Opposed Ø'ing: N/S-1, E/W-2 or Both-3?				0				0				0				0				0	
Right Turns: FREE-1, NRTOR-2 or OLA-3?	NB--	0	SB--	0	NB--	0	SB--	0	NB--	0	SB--	0	NB--	0	SB--	0	NB--	0	SB--	0	
	EB--	0	WB--	0	EB--	0	WB--	0	EB--	0	WB--	0	EB--	0	WB--	0	EB--	0	WB--	0	
ATSAC-1 or ATSAC+ATCS-2?				0				0				0				0				0	
Override Capacity				1200				1200				1200				1200				1200	

	MOVEMENT	EXISTING CONDITION			EXISTING PLUS PROJECT			FUTURE CONDITION W/O PROJECT				FUTURE CONDITION W/ PROJECT				FUTURE W/ PROJECT W/ MITIGATION			
		Volume	No. of Lanes	Lane Volume	Project Traffic	Total Volume	Lane Volume	Added Volume	Total Volume	No. of Lanes	Lane Volume	Added Volume	Total Volume	No. of Lanes	Lane Volume	Added Volume	Total Volume	No. of Lanes	Lane Volume
NORTHBOUND	Left	0	0	0	0	0	0	0	0	0	0	0	0	0	0	0	0	0	0
	Left-Through		0							0				0				0	
	Through	467	1	**265**	0	467	**265**	1	489	1	**278**	0	489	1	**278**	0	489	1	**278**
	Through-Right		1							1				1				1	
	Right	63	0	63	0	63	63	0	66	0	66	0	66	0	66	0	66	0	66
	Left-Through-Right		0							0				0				0	
	Left-Right		0							0				0				0	
SOUTHBOUND	Left	253	1	**253**	0	253	**253**	0	265	1	**265**	0	265	1	**265**	0	265	1	**265**
	Left-Through		0							0				0				0	
	Through	420	2	210	0	420	210	1	440	2	220	0	440	2	220	0	440	2	220
	Through-Right		0							0				0				0	
	Right	0	0	0	0	0	0	0	0	0	0	0	0	0	0	0	0	0	0
	Left-Through-Right		0							0				0				0	
	Left-Right		0							0				0				0	
EASTBOUND	Left	0	0	0	0	0	0	0	0	0	0	0	0	0	0	0	0	0	0
	Left-Through		0							0				0				0	
	Through	0	0	**0**	0	0	**0**	0	0	0	**0**	0	0	0	**0**	0	0	0	**0**
	Through-Right		0							0				0				0	
	Right	0	0	0	0	0	0	0	0	0	0	0	0	0	0	0	0	0	0
	Left-Through-Right		0							0				0				0	
	Left-Right		0							0				0				0	
WESTBOUND	Left	52	1	**52**	0	52	**52**	0	54	1	**54**	0	54	1	**54**	0	54	1	**54**
	Left-Through		0							0				0				0	
	Through	0	0	0	0	0	0	0	0	0	0	0	0	0	0	0	0	0	0
	Through-Right		0							0				0				0	
	Right	141	1	15	30	171	45	0	147	1	15	30	177	1	45	0	177	1	45
	Left-Through-Right		0							0				0				0	
	Left-Right		0							0				0				0	
CRITICAL VOLUMES		North-South:		518	North-South:		518	North-South:			543	North-South:			543	North-South:			543
		East-West:		52	East-West:		52	East-West:			54	East-West:			54	East-West:			54
		SUM:		570	SUM:		570	SUM:			597	SUM:			597	SUM:			597
VOLUME/CAPACITY (V/C) RATIO:				0.475			0.475				0.498				0.498				0.498
V/C LESS ATSAC/ATCS ADJUSTMENT:				0.475			0.475				0.498				0.498				0.498
LEVEL OF SERVICE (LOS):				A			A				A				A				A

REMARKS: Alt. Route 2: Using only Boulevard Pit

Version: 1i Beta; 8/4/2011

PROJECT IMPACT

Change in *v/c* due to project:	0.000	Δ*v/c* after mitigation:	0.000
Significant impacted?	NO	Fully mitigated?	N/A

Level of Service Workheet
(Circular 212 Method)

I/S #:	North-South Street:	Laurel Canyon Boulevard	Year of Count:	2015	Ambient Growth: (%):	1.5	Conducted by:	City Traffic Counters	Date:	4/28/2015
CMA9	East-West Street:	I-5 Freeway SB Ramps	Projection Year:	2018	Peak Hour:	PM	Reviewed by:		Project:	Pacoima Reservoir Project/1-13-4

No. of Phases				0				0				0				0				0			0
Opposed Ø'ing: N/S-1, E/W-2 or Both-3?				0				0				0				0				0			0
Right Turns: FREE-1, NRTOR-2 or OLA-3?	NB--	0	SB--	0	NB--	0	SB--	0	NB--	0	SB--	0	NB--	0	SB--	0	NB--	0	SB--	0	NB--	0	SB-- 0
	EB--	0	WB--	0	EB--	0	WB--	0	EB--	0	WB--	0	EB--	0	WB--	0	EB--	0	WB--	0	EB--	0	WB-- 0
ATSAC-1 or ATSAC+ATCS-2?				0				0				0				0				0			0
Override Capacity				1200				1200				1200				1200				1200			1200

MOVEMENT		EXISTING CONDITION			EXISTING PLUS PROJECT			FUTURE CONDITION W/O PROJECT				FUTURE CONDITION W/ PROJECT				FUTURE W/ PROJECT W/ MITIGATION			
		Volume	No. of Lanes	Lane Volume	Project Traffic	Total Volume	Lane Volume	Added Volume	Total Volume	No. of Lanes	Lane Volume	Added Volume	Total Volume	No. of Lanes	Lane Volume	Added Volume	Total Volume	No. of Lanes	Lane Volume
NORTHBOUND	Left	0	0	0	0	0	0	0	0	0	0	0	0	0	0	0	0	0	0
	Left-Through		0							0				0				0	
	Through	1026	1	**538**	0	1026	**538**	4	1077	1	**565**	0	1077	1	**565**	0	1077	1	**565**
	Through-Right		1							1				1				1	
	Right	50	0	50	0	50	50	0	52	0	52	0	52	0	52	0	52	0	52
	Left-Through-Right		0							0				0				0	
	Left-Right		0							0				0				0	
SOUTHBOUND	Left	391	1	**391**	0	391	**391**	0	409	1	**409**	0	409	1	**409**	0	409	1	**409**
	Left-Through		0							0				0				0	
	Through	564	2	282	0	564	282	6	596	2	298	0	596	2	298	0	596	2	298
	Through-Right		0							0				0				0	
	Right	0	0	0	0	0	0	0	0	0	0	0	0	0	0	0	0	0	0
	Left-Through-Right		0							0				0				0	
	Left-Right		0							0				0				0	
EASTBOUND	Left	0	0	0	0	0	**0**	0	0	0	0	0	0	0	**0**	0	0	0	**0**
	Left-Through		0							0				0				0	
	Through	0	0	**0**	0	0	0	0	0	0	**0**	0	0	0	0	0	0	0	0
	Through-Right		0							0				0				0	
	Right	0	0	0	0	0	0	0	0	0	0	0	0	0	0	0	0	0	0
	Left-Through-Right		0							0				0				0	
	Left-Right		0							0				0				0	
WESTBOUND	Left	37	1	**37**	0	37	37	0	39	1	**39**	0	39	1	39	0	39	1	39
	Left-Through		0							0				0				0	
	Through	0	0	0	0	0	0	0	0	0	0	0	0	0	0	0	0	0	0
	Through-Right		0							0				0				0	
	Right	212	1	17	30	242	**47**	0	222	1	18	30	252	1	**48**	0	252	1	**48**
	Left-Through-Right		0							0				0				0	
	Left-Right		0							0				0				0	
CRITICAL VOLUMES			*North-South:*	929		*North-South:*	929			*North-South:*	974			*North-South:*	974			*North-South:*	974
			East-West:	37		*East-West:*	47			*East-West:*	39			*East-West:*	48			*East-West:*	48
			SUM:	966		*SUM:*	976			*SUM:*	1013			*SUM:*	1022			*SUM:*	1022
VOLUME/CAPACITY *(V/C)* RATIO:				0.805			0.813				0.844				0.852				0.852
V/C LESS ATSAC/ATCS ADJUSTMENT:				0.805			0.813				0.844				0.852				0.852
LEVEL OF SERVICE (LOS):				D			D				D				D				D

REMARKS: Alt. Route 2: Using only Boulevard Pit

Version: 1i Beta; 8/4/2011

PROJECT IMPACT

Change in *v/c* due to project:	0.008	Δ*v/c* after mitigation:	0.008
Significant impacted?	NO	Fully mitigated?	N/A

Level of Service Workheet
(Circular 212 Method)

I/S #:	North-South Street:	I-5 Freeway NB On-Ramp-Rincon Ave	Year of Count:	2015	Ambient Growth: (%):	1.5	Conducted by:	City Traffic Counters	Date:	4/28/2015
CMA10	East-West Street:	Sheldon Street	Projection Year:	2018	Peak Hour:	AM	Reviewed by:		Project:	Pacoima Reservoir Project/1-13-4

No. of Phases				0				0				0				0				0			
Opposed Ø'ing: N/S-1, E/W-2 or Both-3?				0				0				0				0				0			
Right Turns: FREE-1, NRTOR-2 or OLA-3?	NB--	0	SB--	0	NB--	0	SB--	0	NB--	0	SB--	0	NB--	0	SB--	0	NB--	0	SB--	0			
	EB--	0	WB--	0	EB--	0	WB--	0	EB--	0	WB--	0	EB--	0	WB--	0	EB--	0	WB--	0			
ATSAC-1 or ATSAC+ATCS-2?				0				0				0				0				0			
Override Capacity				1200				#####				1200				1200				1200			

	MOVEMENT	EXISTING CONDITION			EXISTING PLUS PROJECT			FUTURE CONDITION W/O PROJECT				FUTURE CONDITION W/ PROJECT				FUTURE W/ PROJECT W/ MITIGATION			
		Volume	No. of Lanes	Lane Volume	Project Traffic	Total Volume	Lane Volume	Added Volume	Total Volume	No. of Lanes	Lane Volume	Added Volume	Total Volume	No. of Lanes	Lane Volume	Added Volume	Total Volume	No. of Lanes	Lane Volume
NORTHBOUND	Left	0	0	**0**	0	0	**0**	0	0	0	**0**	0	0	0	**0**	0	0	0	**0**
	Left-Through		0							0				0				0	
	Through	0	0	0	0	0	0	0	0	0	0	0	0	0	0	0	0	0	0
	Through-Right		0							0				0				0	
	Right	0	0	0	0	0	0	0	0	0	0	0	0	0	0	0	0	0	0
	Left-Through-Right		0							0				0				0	
	Left-Right		0							0				0				0	
SOUTHBOUND	Left	8	0	8	0	8	8	0	8	0	8	0	8	0	8	0	8	0	8
	Left-Through		0							0				0				0	
	Through	2	0	**42**	0	2	**42**	0	2	0	**43**	0	2	0	**43**	0	2	0	**43**
	Through-Right		0							0				0				0	
	Right	32	0	0	0	32	0	0	33	0	0	0	33	0	0	0	33	0	0
	Left-Through-Right		1							1				1				1	
	Left-Right		0							0				0				0	
EASTBOUND	Left	33	1	33	0	33	33	0	35	1	35	0	35	1	35	0	35	1	35
	Left-Through		0							0				0				0	
	Through	962	1	**577**	0	962	**577**	0	1006	1	**604**	0	1006	1	**604**	0	1006	1	**604**
	Through-Right		1							1				1				1	
	Right	192	0	192	0	192	192	0	201	0	201	0	201	0	201	0	201	0	201
	Left-Through-Right		0							0				0				0	
	Left-Right		0							0				0				0	
WESTBOUND	Left	201	1	**201**	30	231	**231**	0	210	1	**210**	30	240	1	**240**	0	240	1	**240**
	Left-Through		0							0				0				0	
	Through	1040	1	534	20	1060	544	0	1088	1	559	20	1108	1	569	0	1108	1	569
	Through-Right		1							1				1				1	
	Right	28	0	28	0	28	28	0	29	0	29	0	29	0	29	0	29	0	29
	Left-Through-Right		0							0				0				0	
	Left-Right		0							0				0				0	
CRITICAL VOLUMES			*North-South:*	42		*North-South:*	42		*North-South:*	43			*North-South:*	43			*North-South:*	43	
			East-West:	778		*East-West:*	808		*East-West:*	814			*East-West:*	844			*East-West:*	844	
			SUM:	820		*SUM:*	850		*SUM:*	857			*SUM:*	887			*SUM:*	887	
VOLUME/CAPACITY *(V/C)* RATIO:				0.683			0.708				0.714				0.739				0.739
V/C LESS ATSAC/ATCS ADJUSTMENT:				0.683			0.708				0.714				0.739				0.739
LEVEL OF SERVICE (LOS):				**B**			**C**				**C**				**C**				**C**

REMARKS: Alt. Route 2: Using only Boulevard Pit

Version: 1i Beta; 8/4/2011

PROJECT IMPACT

Change in *v/c* due to project:	0.025	Δ*v/c* after mitigation:	0.025
Significant impacted?	NO	Fully mitigated?	N/A

Level of Service Workheet
(Circular 212 Method)

I/S #:	North-South Street:	I-5 Freeway NB On-Ramp-Rincon Ave	Year of Count:	2015	Ambient Growth: (%):	1.5	Conducted by:	City Traffic Counters	Date:	4/28/2015
CMA10	East-West Street:	Sheldon Street	Projection Year:	2018	Peak Hour:	Mid-Day	Reviewed by:		Project:	Pacoima Reservoir Project/1-13-4

	Existing Condition	Existing Plus Project	Future Condition W/O Project	Future Condition W/ Project	Future W/ Project W/ Mitigation
No. of Phases	0	0	0	0	0
Opposed Ø'ing: N/S-1, E/W-2 or Both-3?	0	0	0	0	0
Right Turns: FREE-1, NRTOR-2 or OLA-3?	NB-- 0 SB-- 0	NB-- 0 SB-- 0	NB-- 0 SB-- 0	NB-- 0 SB-- 0	NB-- 0 SB-- 0
	EB-- 0 WB-- 0	EB-- 0 WB-- 0	EB-- 0 WB-- 0	EB-- 0 WB-- 0	EB-- 0 WB-- 0
ATSAC-1 or ATSAC+ATCS-2?	0	0	0	0	0
Override Capacity	1200	#####	1200	1200	1200

	MOVEMENT	Existing Condition Volume	Existing No. of Lanes	Existing Lane Volume	Project Traffic	Existing Plus Project Total Volume	Existing Plus Project Lane Volume	Future W/O Project Added Volume	Future W/O Project Total Volume	Future W/O Project No. of Lanes	Future W/O Project Lane Volume	Future W/ Project Added Volume	Future W/ Project Total Volume	Future W/ Project No. of Lanes	Future W/ Project Lane Volume	Future W/ Project W/ Mitigation Added Volume	Future W/ Project W/ Mitigation Total Volume	Future W/ Project W/ Mitigation No. of Lanes	Future W/ Project W/ Mitigation Lane Volume
NORTHBOUND	Left	0	0	**0**	0	0	**0**	0	0	0	**0**	0	0	0	**0**	0	0	0	**0**
	Left-Through		0							0				0				0	
	Through	0	0	0	0	0	0	0	0	0	0	0	0	0	0	0	0	0	0
	Through-Right		0							0				0				0	
	Right	0	0	0	0	0	0	0	0	0	0	0	0	0	0	0	0	0	0
	Left-Through-Right		0							0				0				0	
	Left-Right		0							0				0				0	
SOUTHBOUND	Left	12	0	12	0	12	12	0	13	0	13	0	13	0	13	0	13	0	13
	Left-Through		0							0				0				0	
	Through	10	0	**53**	0	10	**53**	0	10	0	**55**	0	10	0	**55**	0	10	0	**55**
	Through-Right		0							0				0				0	
	Right	31	0	0	0	31	0	0	32	0	0	0	32	0	0	0	32	0	0
	Left-Through-Right		1							1				1				1	
	Left-Right		0							0				0				0	
EASTBOUND	Left	22	1	22	0	22	22	0	23	1	23	0	23	1	23	0	23	1	23
	Left-Through		0							0				0				0	
	Through	616	1	**381**	0	616	**381**	0	644	1	**398**	0	644	1	**398**	0	644	1	**398**
	Through-Right		1							1				1				1	
	Right	145	0	145	0	145	145	0	152	0	152	0	152	0	152	0	152	0	152
	Left-Through-Right		0							0				0				0	
	Left-Right		0							0				0				0	
WESTBOUND	Left	147	1	**147**	30	177	**177**	0	154	1	**154**	30	184	1	**184**	0	184	1	**184**
	Left-Through		0							0				0				0	
	Through	534	1	276	20	554	286	0	558	1	288	20	578	1	298	0	578	1	298
	Through-Right		1							1				1				1	
	Right	17	0	17	0	17	17	0	18	0	18	0	18	0	18	0	18	0	18
	Left-Through-Right		0							0				0				0	
	Left-Right		0							0				0				0	
CRITICAL VOLUMES		North-South:		53	North-South:		53	North-South:			55	North-South:			55	North-South:			55
		East-West:		528	East-West:		558	East-West:			552	East-West:			582	East-West:			582
		SUM:		581	SUM:		611	SUM:			607	SUM:			637	SUM:			637
VOLUME/CAPACITY (V/C) RATIO:				0.484			0.509				0.506				0.531				0.531
V/C LESS ATSAC/ATCS ADJUSTMENT:				0.484			0.509				0.506				0.531				0.531
LEVEL OF SERVICE (LOS):				A			A				A				A				A

REMARKS: Alt. Route 2: Using only Boulevard Pit

Version: 1i Beta; 8/4/2011

PROJECT IMPACT

Change in *v/c* due to project:	0.025	Δ*v/c* after mitigation:	0.025
Significant impacted?	NO	Fully mitigated?	N/A

Level of Service Workheet
(Circular 212 Method)

I/S #:	North-South Street:	I-5 Freeway NB On-Ramp-Rincon Av	Year of Count:	2015	Ambient Growth: (%):	1.5	Conducted by:	City Traffic Counters	Date:	4/28/2015
CMA10	East-West Street:	Sheldon Street	Projection Year:	2018	Peak Hour:	PM	Reviewed by:		Project:	Pacoima Reservoir Project/1-13-4

	Existing Condition	Existing Plus Project	Future Condition W/O Project	Future Condition W/ Project	Future W/ Project W/ Mitigation
No. of Phases	0	0	0	0	0
Opposed Ø'ing: N/S-1, E/W-2 or Both-3?	0	0	0	0	0
Right Turns: FREE-1, NRTOR-2 or OLA-3?	NB-- 0 SB-- 0 EB-- 0 WB-- 0	NB-- 0 SB-- 0 EB-- 0 WB-- 0	NB-- 0 SB-- 0 EB-- 0 WB-- 0	NB-- 0 SB-- 0 EB-- 0 WB-- 0	NB-- 0 SB-- 0 EB-- 0 WB-- 0
ATSAC-1 or ATSAC+ATCS-2?	0	0	0	0	0
Override Capacity	1200	1200	1200	1200	1200

	MOVEMENT	Existing Condition Volume	No. of Lanes	Lane Volume	Existing Plus Project Project Traffic	Total Volume	Lane Volume	Future Condition W/O Project Added Volume	Total Volume	No. of Lanes	Lane Volume	Future Condition W/ Project Added Volume	Total Volume	No. of Lanes	Lane Volume	Future W/ Project W/ Mitigation Added Volume	Total Volume	No. of Lanes	Lane Volume
NORTHBOUND	Left	0	0	**0**	0	0	**0**	0	0	0	**0**	0	0	0	**0**	0	0	0	**0**
	Left-Through		0							0				0				0	
	Through	0	0	0	0	0	0	0	0	0	0	0	0	0	0	0	0	0	0
	Through-Right		0							0				0				0	
	Right	0	0	0	0	0	0	0	0	0	0	0	0	0	0	0	0	0	0
	Left-Through-Right		0							0				0				0	
	Left-Right		0							0				0				0	
SOUTHBOUND	Left	10	0	10	0	10	10	0	10	0	10	0	10	0	10	0	10	0	10
	Left-Through		0							0				0				0	
	Through	4	0	**43**	0	4	**43**	0	4	0	**44**	0	4	0	**44**	0	4	0	**44**
	Through-Right		0							0				0				0	
	Right	29	0	0	0	29	0	0	30	0	0	0	30	0	0	0	30	0	0
	Left-Through-Right		1							1				1				1	
	Left-Right		0							0				0				0	
EASTBOUND	Left	42	1	42	0	42	42	0	44	1	44	0	44	1	44	0	44	1	44
	Left-Through		0							0				0				0	
	Through	970	1	**597**	0	970	**597**	0	1014	1	**624**	0	1014	1	**624**	0	1014	1	**624**
	Through-Right		1							1				1				1	
	Right	223	0	223	0	223	223	0	233	0	233	0	233	0	233	0	233	0	233
	Left-Through-Right		0							0				0				0	
	Left-Right		0							0				0				0	
WESTBOUND	Left	131	1	**131**	30	161	**161**	0	137	1	**137**	30	167	1	**167**	0	167	1	**167**
	Left-Through		0							0				0				0	
	Through	817	1	415	20	837	425	0	854	1	434	20	874	1	444	0	874	1	444
	Through-Right		1							1				1				1	
	Right	13	0	13	0	13	13	0	14	0	14	0	14	0	14	0	14	0	14
	Left-Through-Right		0							0				0				0	
	Left-Right		0							0				0				0	
CRITICAL VOLUMES		North-South:		43	North-South:		43	North-South:			44	North-South:			44	North-South:			44
		East-West:		728	East-West:		758	East-West:			761	East-West:			791	East-West:			791
		SUM:		771	SUM:		801	SUM:			805	SUM:			835	SUM:			835
VOLUME/CAPACITY (V/C) RATIO:				0.643			0.668				0.671				0.696				0.696
V/C LESS ATSAC/ATCS ADJUSTMENT:				0.643			0.668				0.671				0.696				0.696
LEVEL OF SERVICE (LOS):				**B**			**B**				**B**				**B**				**B**

REMARKS: Alt. Route 2: Using only Boulevard Pit

Version: 1i Beta; 8/4/2011

PROJECT IMPACT

Change in *v/c* due to project:	0.025	Δ*v/c* after mitigation:	0.025
Significant impacted?	NO	Fully mitigated?	N/A

Level of Service Workheet
(Circular 212 Method)

I/S #:	North-South Street:	Haddon Avenue	Year of Count:	2015	Ambient Growth: (%):	1.5	Conducted by:	City Traffic Counters	Date:	4/28/2015
CMA11	East-West Street:	Sheldon Street	Projection Year:	2018	Peak Hour:	AM	Reviewed by:		Project:	Pacoima Reservoir Project/1-13-4

No. of Phases				2				2				2				2				2			2
Opposed Ø'ing: N/S-1, E/W-2 or Both-3?				0				0				0				0				0			0
Right Turns: FREE-1, NRTOR-2 or OLA-3?	NB--	0	SB--	0	NB--	0	SB--	0	NB--	0	SB--	0	NB--	0	SB--	0	NB--	0	SB--	0			
	EB--	0	WB--	0	EB--	0	WB--	0	EB--	0	WB--	0	EB--	0	WB--	0	EB--	0	WB--	0			
ATSAC-1 or ATSAC+ATCS-2?				2				2				2				2				2			2
Override Capacity				0				0				0				0				0			0

	MOVEMENT	EXISTING CONDITION			EXISTING PLUS PROJECT			FUTURE CONDITION W/O PROJECT				FUTURE CONDITION W/ PROJECT				FUTURE W/ PROJECT W/ MITIGATION			
		Volume	No. of Lanes	Lane Volume	Project Traffic	Total Volume	Lane Volume	Added Volume	Total Volume	No. of Lanes	Lane Volume	Added Volume	Total Volume	No. of Lanes	Lane Volume	Added Volume	Total Volume	No. of Lanes	Lane Volume
NORTHBOUND	Left	202	0	202	0	202	202	0	211	0	211	0	211	0	211	0	211	0	211
	Left-Through		0							0				0				0	
	Through	29	0	**282**	0	29	**282**	0	30	0	**294**	0	30	0	**294**	0	30	0	**294**
	Through-Right		0							0				0				0	
	Right	51	0	0	0	51	0	0	53	0	0	0	53	0	0	0	53	0	0
	Left-Through-Right		1							1				1				1	
	Left-Right		0							0				0				0	
SOUTHBOUND	Left	31	0	**31**	0	31	**31**	0	32	0	**32**	0	32	0	**32**	0	32	0	**32**
	Left-Through		0							0				0				0	
	Through	40	0	103	0	40	103	0	42	0	107	0	42	0	107	0	42	0	107
	Through-Right		0							0				0				0	
	Right	32	0	0	0	32	0	0	33	0	0	0	33	0	0	0	33	0	0
	Left-Through-Right		1							1				1				1	
	Left-Right		0							0				0				0	
EASTBOUND	Left	12	1	**12**	0	12	**12**	0	13	1	**13**	0	13	1	**13**	0	13	1	**13**
	Left-Through		0							0				0				0	
	Through	747	1	463	0	747	463	0	781	1	484	0	781	1	484	0	781	1	484
	Through-Right		1							1				1				1	
	Right	179	0	179	0	179	179	0	187	0	187	0	187	0	187	0	187	0	187
	Left-Through-Right		0							0				0				0	
	Left-Right		0							0				0				0	
WESTBOUND	Left	38	1	38	0	38	38	0	40	1	40	0	40	1	40	0	40	1	40
	Left-Through		0							0				0				0	
	Through	1036	1	**524**	50	1086	**549**	0	1083	1	**548**	50	1133	1	**573**	0	1133	1	**573**
	Through-Right		1							1				1				1	
	Right	11	0	11	0	11	11	0	12	0	12	0	12	0	12	0	12	0	12
	Left-Through-Right		0							0				0				0	
	Left-Right		0							0				0				0	
CRITICAL VOLUMES		*North-South:*		313	*North-South:*		313	*North-South:*			326	*North-South:*			326	*North-South:*			326
		East-West:		536	*East-West:*		561	*East-West:*			561	*East-West:*			586	*East-West:*			586
		SUM:		849	*SUM:*		874	*SUM:*			887	*SUM:*			912	*SUM:*			912
VOLUME/CAPACITY *(V/C)* RATIO:				0.566			0.583				0.591				0.608				0.608
V/C LESS ATSAC/ATCS ADJUSTMENT:				**0.466**			**0.483**				**0.491**				**0.508**				**0.508**
LEVEL OF SERVICE (LOS):				**A**			**A**				**A**				**A**				**A**

REMARKS: Alt. Route 2: Using only Boulevard Pit

Version: 1i Beta; 8/4/2011

PROJECT IMPACT

Change in *v/c* due to project:	0.017	Δ*v/c* after mitigation:	0.017
Significant impacted?	NO	Fully mitigated?	N/A

Level of Service Workheet
(Circular 212 Method)

I/S #:	North-South Street:	Haddon Avenue	Year of Count:	2015	Ambient Growth: (%):	1.5	Conducted by:	City Traffic Counters	Date:	4/28/2015
CMA11	East-West Street:	Sheldon Street	Projection Year:	2018	Peak Hour:	Mid-Day	Reviewed by:		Project:	Pacoima Reservoir Project/1-13-4

No. of Phases				2				2				2				2				2			2
Opposed Ø'ing: N/S-1, E/W-2 or Both-3?				0				0				0				0				0			0
Right Turns: FREE-1, NRTOR-2 or OLA-3?	NB--	0	SB--	0	NB--	0	SB--	0	NB--	0	SB--	0	NB--	0	SB--	0	NB--	0	SB--	0			
	EB--	0	WB--	0	EB--	0	WB--	0	EB--	0	WB--	0	EB--	0	WB--	0	EB--	0	WB--	0			
ATSAC-1 or ATSAC+ATCS-2?				2				2				2				2				2			2
Override Capacity				0				0				0				0				0			0

MOVEMENT		EXISTING CONDITION			EXISTING PLUS PROJECT			FUTURE CONDITION W/O PROJECT				FUTURE CONDITION W/ PROJECT				FUTURE W/ PROJECT W/ MITIGATION			
		Volume	No. of Lanes	Lane Volume	Project Traffic	Total Volume	Lane Volume	Added Volume	Total Volume	No. of Lanes	Lane Volume	Added Volume	Total Volume	No. of Lanes	Lane Volume	Added Volume	Total Volume	No. of Lanes	Lane Volume
NORTHBOUND	Left	56	0	**56**	0	56	**56**	0	59	0	**59**	0	59	0	**59**	0	59	0	**59**
	Left-Through		0							0				0				0	
	Through	0	0	61	0	0	61	0	0	0	64	0	0	0	64	0	0	0	64
	Through-Right		0							0				0				0	
	Right	5	0	0	0	5	0	0	5	0	0	0	5	0	0	0	5	0	0
	Left-Through-Right		1							1				1				1	
	Left-Right		0							0				0				0	
SOUTHBOUND	Left	10	0	10	0	10	10	0	10	0	10	0	10	0	10	0	10	0	10
	Left-Through		0							0				0				0	
	Through	2	0	**28**	0	2	**28**	0	2	0	**29**	0	2	0	**29**	0	2	0	**29**
	Through-Right		0							0				0				0	
	Right	16	0	0	0	16	0	0	17	0	0	0	17	0	0	0	17	0	0
	Left-Through-Right		1							1				1				1	
	Left-Right		0							0				0				0	
EASTBOUND	Left	8	1	**8**	0	8	**8**	0	8	1	**8**	0	8	1	**8**	0	8	1	**8**
	Left-Through		0							0				0				0	
	Through	599	1	316	0	599	316	0	626	1	330	0	626	1	330	0	626	1	330
	Through-Right		1							1				1				1	
	Right	32	0	32	0	32	32	0	33	0	33	0	33	0	33	0	33	0	33
	Left-Through-Right		0							0				0				0	
	Left-Right		0							0				0				0	
WESTBOUND	Left	6	1	6	0	6	6	0	6	1	6	0	6	1	6	0	6	1	6
	Left-Through		0							0				0				0	
	Through	632	1	**319**	50	682	**344**	0	661	1	**334**	50	711	1	**359**	0	711	1	**359**
	Through-Right		1							1				1				1	
	Right	6	0	6	0	6	6	0	6	0	6	0	6	0	6	0	6	0	6
	Left-Through-Right		0							0				0				0	
	Left-Right		0							0				0				0	
CRITICAL VOLUMES		*North-South:*		84	*North-South:*		84	*North-South:*			88	*North-South:*			88	*North-South:*			88
		East-West:		327	*East-West:*		352	*East-West:*			342	*East-West:*			367	*East-West:*			367
		SUM:		411	*SUM:*		436	*SUM:*			430	*SUM:*			455	*SUM:*			455
VOLUME/CAPACITY *(V/C)* RATIO:				0.274			0.291				0.287				0.303				0.303
V/C LESS ATSAC/ATCS ADJUSTMENT:				**0.174**			**0.191**				**0.187**				**0.203**				**0.203**
LEVEL OF SERVICE (LOS):				**A**			**A**				**A**				**A**				**A**

REMARKS: Alt. Route 2: Using only Boulevard Pit

Version: 1i Beta; 8/4/2011

PROJECT IMPACT

Change in *v/c* due to project:	0.016	Δ*v/c* after mitigation:	0.016
Significant impacted?	NO	Fully mitigated?	N/A

Level of Service Workheet
(Circular 212 Method)

I/S #:	North-South Street:	Haddon Avenue	Year of Count:	2015	Ambient Growth: (%):	1.5	Conducted by:	City Traffic Counters	Date:	4/28/2015
CMA11	East-West Street:	Sheldon Street	Projection Year:	2018	Peak Hour:	PM	Reviewed by:		Project:	Pacoima Reservoir Project/1-13-4

No. of Phases				2				2				2				2				2			2
Opposed Ø'ing: N/S-1, E/W-2 or Both-3?				0				0				0				0				0			0
Right Turns: FREE-1, NRTOR-2 or OLA-3?	NB--	0	SB--	0	NB--	0	SB--	0	NB--	0	SB--	0	NB--	0	SB--	0	NB--	0	SB--	0	NB--	0	SB-- 0
	EB--	0	WB--	0	EB--	0	WB--	0	EB--	0	WB--	0	EB--	0	WB--	0	EB--	0	WB--	0	EB--	0	WB-- 0
ATSAC-1 or ATSAC+ATCS-2?				2				2				2				2				2			2
Override Capacity				0				0				0				0				0			0

MOVEMENT		EXISTING CONDITION			EXISTING PLUS PROJECT			FUTURE CONDITION W/O PROJECT				FUTURE CONDITION W/ PROJECT				FUTURE W/ PROJECT W/ MITIGATION			
		Volume	No. of Lanes	Lane Volume	Project Traffic	Total Volume	Lane Volume	Added Volume	Total Volume	No. of Lanes	Lane Volume	Added Volume	Total Volume	No. of Lanes	Lane Volume	Added Volume	Total Volume	No. of Lanes	Lane Volume
NORTHBOUND	Left	99	0	**99**	0	99	**99**	0	104	0	**104**	0	104	0	**104**	0	104	0	**104**
	Left-Through		0							0				0				0	
	Through	10	0	125	0	10	125	0	10	0	131	0	10	0	131	0	10	0	131
	Through-Right		0							0				0				0	
	Right	16	0	0	0	16	0	0	17	0	0	0	17	0	0	0	17	0	0
	Left-Through-Right		1							1				1				1	
	Left-Right		0							0				0				0	
SOUTHBOUND	Left	8	0	8	0	8	8	0	8	0	8	0	8	0	8	0	8	0	8
	Left-Through		0							0				0				0	
	Through	11	0	**37**	0	11	**37**	0	12	0	**39**	0	12	0	**39**	0	12	0	**39**
	Through-Right		0							0				0				0	
	Right	18	0	0	0	18	0	0	19	0	0	0	19	0	0	0	19	0	0
	Left-Through-Right		1							1				1				1	
	Left-Right		0							0				0				0	
EASTBOUND	Left	11	1	11	0	11	11	0	12	1	12	0	12	1	12	0	12	1	12
	Left-Through		0							0				0				0	
	Through	944	1	**520**	0	944	**520**	0	987	1	**544**	0	987	1	**544**	0	987	1	**544**
	Through-Right		1							1				1				1	
	Right	96	0	96	0	96	96	0	100	0	100	0	100	0	100	0	100	0	100
	Left-Through-Right		0							0				0				0	
	Left-Right		0							0				0				0	
WESTBOUND	Left	4	1	**4**	0	4	**4**	0	4	1	**4**	0	4	1	**4**	0	4	1	**4**
	Left-Through		0							0				0				0	
	Through	843	1	424	50	893	449	0	882	1	444	50	932	1	469	0	932	1	469
	Through-Right		1							1				1				1	
	Right	5	0	5	0	5	5	0	5	0	5	0	5	0	5	0	5	0	5
	Left-Through-Right		0							0				0				0	
	Left-Right		0							0				0				0	
CRITICAL VOLUMES		North-South:		136	North-South:		136	North-South:			143	North-South:			143	North-South:			143
		East-West:		524	East-West:		524	East-West:			548	East-West:			548	East-West:			548
		SUM:		660	SUM:		660	SUM:			691	SUM:			691	SUM:			691
VOLUME/CAPACITY (V/C) RATIO:				0.440			0.440				0.461				0.461				0.461
V/C LESS ATSAC/ATCS ADJUSTMENT:				**0.340**			**0.340**				**0.361**				**0.361**				**0.361**
LEVEL OF SERVICE (LOS):				**A**			**A**				**A**				**A**				**A**

REMARKS: Alt. Route 2: Using only Boulevard Pit

Version: 1i Beta; 8/4/2011

PROJECT IMPACT

Change in *v/c* due to project:	0.000	Δ*v/c* after mitigation:	0.000
Significant impacted?	NO	Fully mitigated?	N/A

Level of Service Workheet
(Circular 212 Method)

I/S #:	North-South Street:	Telfair Avenue	Year of Count:	2015	Ambient Growth: (%):	1.5	Conducted by:	City Traffic Counters	Date:	4/28/2015
CMA12	East-West Street:	Sheldon Street	Projection Year:	2018	Peak Hour:	AM	Reviewed by:		Project:	Pacoima Reservoir Project/1-13-4

No. of Phases				2				2				2				2				2			
Opposed Ø'ing: N/S-1, E/W-2 or Both-3?				0				0				0				0				0			
Right Turns: FREE-1, NRTOR-2 or OLA-3?	NB--	0	SB--	0	NB--	0	SB--	0	NB--	0	SB--	0	NB--	0	SB--	0	NB--	0	SB--	0			
	EB--	0	WB--	0	EB--	0	WB--	0	EB--	0	WB--	0	EB--	0	WB--	0	EB--	0	WB--	0			
ATSAC-1 or ATSAC+ATCS-2?				2				2				2				2				2			
Override Capacity				0				0				0				0				0			

	MOVEMENT	EXISTING CONDITION			EXISTING PLUS PROJECT			FUTURE CONDITION W/O PROJECT				FUTURE CONDITION W/ PROJECT				FUTURE W/ PROJECT W/ MITIGATION			
		Volume	No. of Lanes	Lane Volume	Project Traffic	Total Volume	Lane Volume	Added Volume	Total Volume	No. of Lanes	Lane Volume	Added Volume	Total Volume	No. of Lanes	Lane Volume	Added Volume	Total Volume	No. of Lanes	Lane Volume
NORTHBOUND	Left	134	0	134	0	134	134	0	140	0	140	0	140	0	140	0	140	0	140
	Left-Through		0							0				0				0	
	Through	22	0	**217**	0	22	**217**	0	23	0	**227**	0	23	0	**227**	0	23	0	**227**
	Through-Right		0							0				0				0	
	Right	61	0	0	0	61	0	0	64	0	0	0	64	0	0	0	64	0	0
	Left-Through-Right		1							1				1				1	
	Left-Right		0							0				0				0	
SOUTHBOUND	Left	11	0	**11**	0	11	**11**	0	12	0	**12**	0	12	0	**12**	0	12	0	**12**
	Left-Through		0							0				0				0	
	Through	48	0	89	0	48	89	0	50	0	93	0	50	0	93	0	50	0	93
	Through-Right		0							0				0				0	
	Right	30	0	0	0	30	0	0	31	0	0	0	31	0	0	0	31	0	0
	Left-Through-Right		1							1				1				1	
	Left-Right		0							0				0				0	
EASTBOUND	Left	5	0	**5**	0	5	**5**	0	5	0	**5**	0	5	0	**5**	0	5	0	**5**
	Left-Through		1							1				1				1	
	Through	589	0	380	0	589	380	0	616	0	397	0	616	0	397	0	616	0	397
	Through-Right		1							1				1				1	
	Right	151	0	380	0	151	380	0	158	0	397	0	158	0	397	0	158	0	397
	Left-Through-Right		0							0				0				0	
	Left-Right		0							0				0				0	
WESTBOUND	Left	139	0	139	0	139	139	0	145	0	145	0	145	0	145	0	145	0	145
	Left-Through		1							1				1				1	
	Through	842	0	**715**	50	892	**740**	0	880	0	**746**	50	930	0	**771**	0	930	0	**771**
	Through-Right		1							1				1				1	
	Right	31	0	715	0	31	740	0	32	0	746	0	32	0	771	0	32	0	771
	Left-Through-Right		0							0				0				0	
	Left-Right		0							0				0				0	
CRITICAL VOLUMES		*North-South:*		228	*North-South:*		228	*North-South:*			239	*North-South:*			239	*North-South:*			239
		East-West:		720	*East-West:*		745	*East-West:*			751	*East-West:*			776	*East-West:*			776
		SUM:		948	*SUM:*		973	*SUM:*			990	*SUM:*			1015	*SUM:*			1015
VOLUME/CAPACITY *(V/C)* RATIO:				0.632			0.649				0.660				0.677				0.677
V/C LESS ATSAC/ATCS ADJUSTMENT:				**0.532**			**0.549**				**0.560**				**0.577**				**0.577**
LEVEL OF SERVICE (LOS):				**A**			**A**				**A**				**A**				**A**

REMARKS: Alt. Route 2: Using only Boulevard Pit

Version: 1i Beta; 8/4/2011

PROJECT IMPACT

Change in *v/c* due to project:	0.017	Δ*v/c* after mitigation:	0.017
Significant impacted?	NO	Fully mitigated?	N/A

Level of Service Workheet
(Circular 212 Method)

I/S #:	North-South Street:	Telfair Avenue	Year of Count:	2015	Ambient Growth: (%):	1.5	Conducted by:	City Traffic Counters	Date:	4/28/2015
CMA12	East-West Street:	Sheldon Street	Projection Year:	2018	Peak Hour:	Mid-Day	Reviewed by:		Project:	Pacoima Reservoir Project/1-13-4

No. of Phases				2				2				2				2				2			
Opposed Ø'ing: N/S-1, E/W-2 or Both-3?				0				0				0				0				0			
Right Turns: FREE-1, NRTOR-2 or OLA-3?	NB--	0	SB--	0	NB--	0	SB--	0	NB--	0	SB--	0	NB--	0	SB--	0	NB--	0	SB--	0			
	EB--	0	WB--	0	EB--	0	WB--	0	EB--	0	WB--	0	EB--	0	WB--	0	EB--	0	WB--	0			
ATSAC-1 or ATSAC+ATCS-2?				2				2				2				2				2			
Override Capacity				0				0				0				0				0			

	MOVEMENT	EXISTING CONDITION			EXISTING PLUS PROJECT			FUTURE CONDITION W/O PROJECT				FUTURE CONDITION W/ PROJECT				FUTURE W/ PROJECT W/ MITIGATION			
		Volume	No. of Lanes	Lane Volume	Project Traffic	Total Volume	Lane Volume	Added Volume	Total Volume	No. of Lanes	Lane Volume	Added Volume	Total Volume	No. of Lanes	Lane Volume	Added Volume	Total Volume	No. of Lanes	Lane Volume
NORTHBOUND	Left	37	0	37	0	37	37	0	39	0	39	0	39	0	39	0	39	0	39
	Left-Through		0							0				0				0	
	Through	4	0	**59**	0	4	**59**	0	4	0	**62**	0	4	0	**62**	0	4	0	**62**
	Through-Right		0							0				0				0	
	Right	18	0	0	0	18	0	0	19	0	0	0	19	0	0	0	19	0	0
	Left-Through-Right		1							1				1				1	
	Left-Right		0							0				0				0	
SOUTHBOUND	Left	0	0	**0**	0	0	**0**	0	0	0	**0**	0	0	0	**0**	0	0	0	**0**
	Left-Through		0							0				0				0	
	Through	2	0	17	0	2	17	0	2	0	18	0	2	0	18	0	2	0	18
	Through-Right		0							0				0				0	
	Right	15	0	0	0	15	0	0	16	0	0	0	16	0	0	0	16	0	0
	Left-Through-Right		1							1				1				1	
	Left-Right		0							0				0				0	
EASTBOUND	Left	6	0	6	0	6	6	0	6	0	6	0	6	0	**6**	0	6	0	**6**
	Left-Through		1							1				1				1	
	Through	559	0	**302**	0	559	**302**	0	585	0	**315**	0	585	0	315	0	585	0	315
	Through-Right		1							1				1				1	
	Right	32	0	302	0	32	302	0	33	0	315	0	33	0	315	0	33	0	315
	Left-Through-Right		0							0				0				0	
	Left-Right		0							0				0				0	
WESTBOUND	Left	32	0	**32**	0	32	**32**	0	33	0	**33**	0	33	0	33	0	33	0	33
	Left-Through		1							1				1				1	
	Through	497	0	295	50	547	320	0	520	0	341	50	570	0	**366**	0	570	0	**366**
	Through-Right		1							1				1				1	
	Right	28	0	295	0	28	320	0	29	0	341	0	29	0	366	0	29	0	366
	Left-Through-Right		0							0				0				0	
	Left-Right		0							0				0				0	
CRITICAL VOLUMES			*North-South:*	59		*North-South:*	59		*North-South:*	62			*North-South:*	62			*North-South:*	62	
			East-West:	334		*East-West:*	334		*East-West:*	348			*East-West:*	372			*East-West:*	372	
			SUM:	393		*SUM:*	393		*SUM:*	410			*SUM:*	434			*SUM:*	434	
VOLUME/CAPACITY *(V/C)* RATIO:				0.262			0.262				0.273				0.289				0.289
V/C LESS ATSAC/ATCS ADJUSTMENT:				**0.162**			**0.162**				**0.173**				**0.189**				**0.189**
LEVEL OF SERVICE (LOS):				**A**			**A**				**A**				**A**				**A**

REMARKS: Alt. Route 2: Using only Boulevard Pit

Version: 1i Beta; 8/4/2011

PROJECT IMPACT

Change in *v/c* due to project:	0.016	Δ*v/c* after mitigation:	0.016
Significant impacted?	NO	Fully mitigated?	N/A

Level of Service Workheet
(Circular 212 Method)

I/S #:	North-South Street:	Telfair Avenue	Year of Count:	2015	Ambient Growth: (%):	1.5	Conducted by:	City Traffic Counters	Date:	4/28/2015
CMA12	East-West Street:	Sheldon Street	Projection Year:	2018	Peak Hour:	PM	Reviewed by:		Project:	Pacoima Reservoir Project/1-13-4

No. of Phases				2				2				2				2				2			
Opposed Ø'ing: N/S-1, E/W-2 or Both-3?				0				0				0				0				0			
Right Turns: FREE-1, NRTOR-2 or OLA-3?	NB--	0	SB--	0	NB--	0	SB--	0	NB--	0	SB--	0	NB--	0	SB--	0	NB--	0	SB--	0			
	EB--	0	WB--	0	EB--	0	WB--	0	EB--	0	WB--	0	EB--	0	WB--	0	EB--	0	WB--	0			
ATSAC-1 or ATSAC+ATCS-2?				2				2				2				2				2			
Override Capacity				0				0				0				0				0			

	MOVEMENT	EXISTING CONDITION			EXISTING PLUS PROJECT			FUTURE CONDITION W/O PROJECT				FUTURE CONDITION W/ PROJECT				FUTURE W/ PROJECT W/ MITIGATION			
		Volume	No. of Lanes	Lane Volume	Project Traffic	Total Volume	Lane Volume	Added Volume	Total Volume	No. of Lanes	Lane Volume	Added Volume	Total Volume	No. of Lanes	Lane Volume	Added Volume	Total Volume	No. of Lanes	Lane Volume
NORTHBOUND	Left	90	0	90	0	90	90	0	94	0	94	0	94	0	94	0	94	0	94
	Left-Through		0							0				0				0	
	Through	7	0	**149**	0	7	**149**	0	7	0	**155**	0	7	0	**155**	0	7	0	**155**
	Through-Right		0							0				0				0	
	Right	52	0	0	0	52	0	0	54	0	0	0	54	0	0	0	54	0	0
	Left-Through-Right		1							1				1				1	
	Left-Right		0							0				0				0	
SOUTHBOUND	Left	4	0	**4**	0	4	**4**	0	4	0	**4**	0	4	0	**4**	0	4	0	**4**
	Left-Through		0							0				0				0	
	Through	6	0	37	0	6	37	0	6	0	38	0	6	0	38	0	6	0	38
	Through-Right		0							0				0				0	
	Right	27	0	0	0	27	0	0	28	0	0	0	28	0	0	0	28	0	0
	Left-Through-Right		1							1				1				1	
	Left-Right		0							0				0				0	
EASTBOUND	Left	10	0	10	0	10	10	0	10	0	10	0	10	0	10	0	10	0	10
	Left-Through		1							1				1				1	
	Through	739	0	**446**	0	739	**446**	0	773	0	**465**	0	773	0	**465**	0	773	0	**465**
	Through-Right		1							1				1				1	
	Right	112	0	446	0	112	446	0	117	0	465	0	117	0	465	0	117	0	465
	Left-Through-Right		0							0				0				0	
	Left-Right		0							0				0				0	
WESTBOUND	Left	54	0	**54**	0	54	**54**	0	56	0	**56**	0	56	0	**56**	0	56	0	**56**
	Left-Through		1							1				1				1	
	Through	647	0	437	50	697	462	0	677	0	457	50	727	0	482	0	727	0	482
	Through-Right		1							1				1				1	
	Right	11	0	437	0	11	462	0	12	0	457	0	12	0	482	0	12	0	482
	Left-Through-Right		0							0				0				0	
	Left-Right		0							0				0				0	
CRITICAL VOLUMES		*North-South:*		153	*North-South:*		153	*North-South:*			159	*North-South:*			159	*North-South:*			159
		East-West:		500	*East-West:*		500	*East-West:*			521	*East-West:*			521	*East-West:*			521
		SUM:		653	*SUM:*		653	*SUM:*			680	*SUM:*			680	*SUM:*			680
VOLUME/CAPACITY *(V/C)* RATIO:				0.435			0.435				0.453				0.453				0.453
V/C LESS ATSAC/ATCS ADJUSTMENT:				**0.335**			**0.335**				**0.353**				**0.353**				**0.353**
LEVEL OF SERVICE (LOS):				**A**			**A**				**A**				**A**				**A**

REMARKS: Alt. Route 2: Using only Boulevard Pit

Version: 1i Beta; 8/4/2011

PROJECT IMPACT

Change in *v/c* due to project:	0.000	Δ*v/c* after mitigation:	0.000
Significant impacted?	NO	Fully mitigated?	N/A

Level of Service Workheet
(Circular 212 Method)

I/S #:	North-South Street:	San Fernando Road	Year of Count:	2015	Ambient Growth: (%):	1.5	Conducted by:	City Traffic Counters	Date:	4/28/2015
CMA13	East-West Street:	Sheldon Street	Projection Year:	2018	Peak Hour:	AM	Reviewed by:		Project:	Pacoima Reservoir Project/1-13-4

	EXISTING CONDITION	EXISTING PLUS PROJECT	FUTURE CONDITION W/O PROJECT	FUTURE CONDITION W/ PROJECT	FUTURE W/ PROJECT W/ MITIGATION
No. of Phases	4	4	4	4	4
Opposed Ø'ing: N/S-1, E/W-2 or Both-3?	0	0	0	0	0
Right Turns: FREE-1, NRTOR-2 or OLA-3?	NB-- 0 SB-- 0 EB-- 0 WB-- 0	NB-- 0 SB-- 0 EB-- 0 WB-- 0	NB-- 0 SB-- 0 EB-- 0 WB-- 0	NB-- 0 SB-- 0 EB-- 0 WB-- 0	NB-- 0 SB-- 0 EB-- 0 WB-- 0
ATSAC-1 or ATSAC+ATCS-2?	2	2	2	2	2
Override Capacity	0	0	0	0	0

	MOVEMENT	EXISTING CONDITION Volume	No. of Lanes	Lane Volume	EXISTING PLUS PROJECT Project Traffic	Total Volume	Lane Volume	FUTURE CONDITION W/O PROJECT Added Volume	Total Volume	No. of Lanes	Lane Volume	FUTURE CONDITION W/ PROJECT Added Volume	Total Volume	No. of Lanes	Lane Volume	FUTURE W/ PROJECT W/ MITIGATION Added Volume	Total Volume	No. of Lanes	Lane Volume
NORTHBOUND	Left	178	1	**178**	0	178	**178**	0	186	1	**186**	0	186	1	**186**	0	186	1	**186**
	Left-Through		0							0				0				0	
	Through	728	1	403	0	728	403	4	765	1	423	0	765	1	423	0	765	1	423
	Through-Right		1							1				1				1	
	Right	77	0	77	0	77	77	0	81	0	81	0	81	0	81	0	81	0	81
	Left-Through-Right		0							0				0				0	
	Left-Right		0							0				0				0	
SOUTHBOUND	Left	97	1	97	0	97	97	0	101	1	101	0	101	1	101	0	101	1	101
	Left-Through		0							0				0				0	
	Through	558	1	**339**	0	558	**364**	8	591	1	**358**	0	591	1	**383**	0	591	1	**383**
	Through-Right		1							1				1				1	
	Right	119	0	119	50	169	169	0	124	0	124	50	174	0	174	0	174	0	174
	Left-Through-Right		0							0				0				0	
	Left-Right		0							0				0				0	
EASTBOUND	Left	53	1	**53**	0	53	**53**	0	55	1	**55**	0	55	1	**55**	0	55	1	**55**
	Left-Through		0							0				0				0	
	Through	433	1	292	0	433	292	0	453	1	305	0	453	1	305	0	453	1	305
	Through-Right		1							1				1				1	
	Right	150	0	150	0	150	150	0	157	0	157	0	157	0	157	0	157	0	157
	Left-Through-Right		0							0				0				0	
	Left-Right		0							0				0				0	
WESTBOUND	Left	144	1	144	0	144	144	0	151	1	151	0	151	1	151	0	151	1	151
	Left-Through		0							0				0				0	
	Through	1022	1	**581**	0	1022	**581**	0	1069	1	**607**	0	1069	1	**607**	0	1069	1	**607**
	Through-Right		1							1				1				1	
	Right	139	0	139	0	139	139	0	145	0	145	0	145	0	145	0	145	0	145
	Left-Through-Right		0							0				0				0	
	Left-Right		0							0				0				0	
CRITICAL VOLUMES		*North-South:*		517	*North-South:*		542	*North-South:*			544	*North-South:*			569	*North-South:*			569
		East-West:		634	*East-West:*		634	*East-West:*			662	*East-West:*			662	*East-West:*			662
		SUM:		1151	*SUM:*		1176	*SUM:*			1206	*SUM:*			1231	*SUM:*			1231
VOLUME/CAPACITY *(V/C)* RATIO:				0.837			0.855				0.877				0.895				0.895
V/C LESS ATSAC/ATCS ADJUSTMENT:				**0.737**			**0.755**				**0.777**				**0.795**				**0.795**
LEVEL OF SERVICE (LOS):				**C**			**C**				**C**				**C**				**C**

REMARKS: Alt. Route 2: Using only Boulevard Pit

Version: 1i Beta; 8/4/2011

PROJECT IMPACT

Change in *v/c* due to project:	0.018	Δ*v/c* after mitigation:	0.018
Significant impacted?	NO	Fully mitigated?	N/A

Level of Service Workheet
(Circular 212 Method)

I/S #:	North-South Street:	San Fernando Road	Year of Count:	2015	Ambient Growth: (%):	1.5	Conducted by:	City Traffic Counters	Date:	4/28/2015
CMA13	East-West Street:	Sheldon Street	Projection Year:	2018	Peak Hour:	Mid-Day	Reviewed by:		Project:	Pacoima Reservoir Project/1-13-4

No. of Phases				4				4				4				4				4			4
Opposed Ø'ing: N/S-1, E/W-2 or Both-3?				0				0				0				0				0			0
Right Turns: FREE-1, NRTOR-2 or OLA-3?	NB--	0	SB--	0	NB--	0	SB--	0	NB--	0	SB--	0	NB--	0	SB--	0	NB--	0	SB--	0	NB--	0	SB-- 0
	EB--	0	WB--	0	EB--	0	WB--	0	EB--	0	WB--	0	EB--	0	WB--	0	EB--	0	WB--	0	EB--	0	WB-- 0
ATSAC-1 or ATSAC+ATCS-2?				2				2				2				2				2			2
Override Capacity				0				0				0				0				0			0

MOVEMENT		EXISTING CONDITION			EXISTING PLUS PROJECT			FUTURE CONDITION W/O PROJECT				FUTURE CONDITION W/ PROJECT				FUTURE W/ PROJECT W/ MITIGATION			
		Volume	No. of Lanes	Lane Volume	Project Traffic	Total Volume	Lane Volume	Added Volume	Total Volume	No. of Lanes	Lane Volume	Added Volume	Total Volume	No. of Lanes	Lane Volume	Added Volume	Total Volume	No. of Lanes	Lane Volume
NORTHBOUND	Left	121	1	**121**	0	121	**121**	0	127	1	**127**	0	127	1	**127**	0	127	1	**127**
	Left-Through		0							0				0				0	
	Through	389	1	236	0	389	236	8	415	1	251	0	415	1	251	0	415	1	251
	Through-Right		1							1				1				1	
	Right	82	0	82	0	82	82	0	86	0	86	0	86	0	86	0	86	0	86
	Left-Through-Right		0							0				0				0	
	Left-Right		0							0				0				0	
SOUTHBOUND	Left	70	1	70	0	70	70	0	73	1	73	0	73	1	73	0	73	1	73
	Left-Through		0							0				0				0	
	Through	356	1	**209**	0	356	**234**	6	378	1	**222**	0	378	1	**247**	0	378	1	**247**
	Through-Right		1							1				1				1	
	Right	62	0	62	50	112	112	0	65	0	65	50	115	0	115	0	115	0	115
	Left-Through-Right		0							0				0				0	
	Left-Right		0							0				0				0	
EASTBOUND	Left	65	1	65	0	65	65	0	68	1	68	0	68	1	68	0	68	1	68
	Left-Through		0							0				0				0	
	Through	465	1	**288**	0	465	**288**	0	486	1	**301**	0	486	1	**301**	0	486	1	**301**
	Through-Right		1							1				1				1	
	Right	111	0	111	0	111	111	0	116	0	116	0	116	0	116	0	116	0	116
	Left-Through-Right		0							0				0				0	
	Left-Right		0							0				0				0	
WESTBOUND	Left	84	1	**84**	0	84	**84**	0	88	1	**88**	0	88	1	**88**	0	88	1	**88**
	Left-Through		0							0				0				0	
	Through	441	1	260	0	441	260	0	461	1	272	0	461	1	272	0	461	1	272
	Through-Right		1							1				1				1	
	Right	78	0	78	0	78	78	0	82	0	82	0	82	0	82	0	82	0	82
	Left-Through-Right		0							0				0				0	
	Left-Right		0							0				0				0	
CRITICAL VOLUMES		*North-South:*		330	*North-South:*		355	*North-South:*			349	*North-South:*			374	*North-South:*			374
		East-West:		372	*East-West:*		372	*East-West:*			389	*East-West:*			389	*East-West:*			389
		SUM:		702	*SUM:*		727	*SUM:*			738	*SUM:*			763	*SUM:*			763
VOLUME/CAPACITY *(V/C)* RATIO:				0.511			0.529				0.537				0.555				0.555
V/C LESS ATSAC/ATCS ADJUSTMENT:				**0.411**			**0.429**				**0.437**				**0.455**				**0.455**
LEVEL OF SERVICE (LOS):				**A**			**A**				**A**				**A**				**A**

REMARKS: Alt. Route 2: Using only Boulevard Pit

Version: 1i Beta; 8/4/2011

PROJECT IMPACT

Change in *v/c* due to project:	0.018	Δ*v/c* after mitigation:	0.018
Significant impacted?	NO	Fully mitigated?	N/A

Level of Service Workheet
(Circular 212 Method)

I/S #:	North-South Street:	San Fernando Road	Year of Count:	2015	Ambient Growth: (%):	1.5	Conducted by:	City Traffic Counters	Date:	4/28/2015
CMA13	East-West Street:	Sheldon Street	Projection Year:	2018	Peak Hour:	PM	Reviewed by:		Project:	Pacoima Reservoir Project/1-13-4

No. of Phases				4				4				4				4				4			4
Opposed Ø'ing: N/S-1, E/W-2 or Both-3?				0				0				0				0				0			0
Right Turns: FREE-1, NRTOR-2 or OLA-3?	NB--	0	SB--	0	NB--	0	SB--	0	NB--	0	SB--	0	NB--	0	SB--	0	NB--	0	SB--	0			
	EB--	0	WB--	0	EB--	0	WB--	0	EB--	0	WB--	0	EB--	0	WB--	0	EB--	0	WB--	0			
ATSAC-1 or ATSAC+ATCS-2?				2				2				2				2				2			2
Override Capacity				0				0				0				0				0			0

MOVEMENT		EXISTING CONDITION			EXISTING PLUS PROJECT			FUTURE CONDITION W/O PROJECT				FUTURE CONDITION W/ PROJECT				FUTURE W/ PROJECT W/ MITIGATION			
		Volume	No. of Lanes	Lane Volume	Project Traffic	Total Volume	Lane Volume	Added Volume	Total Volume	No. of Lanes	Lane Volume	Added Volume	Total Volume	No. of Lanes	Lane Volume	Added Volume	Total Volume	No. of Lanes	Lane Volume
NORTHBOUND	Left	191	1	**191**	0	191	**191**	0	200	1	**200**	0	200	1	**200**	0	200	1	**200**
	Left-Through		0							0				0				0	
	Through	553	1	332	0	553	332	8	586	1	351	0	586	1	351	0	586	1	351
	Through-Right		1							1				1				1	
	Right	110	0	110	0	110	110	0	115	0	115	0	115	0	115	0	115	0	115
	Left-Through-Right		0							0				0				0	
	Left-Right		0							0				0				0	
SOUTHBOUND	Left	94	1	94	0	94	94	0	98	1	98	0	98	1	98	0	98	1	98
	Left-Through		0							0				0				0	
	Through	573	1	**315**	0	573	**340**	6	605	1	**332**	0	605	1	**357**	0	605	1	**357**
	Through-Right		1							1				1				1	
	Right	56	0	56	50	106	106	0	59	0	59	50	109	0	109	0	109	0	109
	Left-Through-Right		0							0				0				0	
	Left-Right		0							0				0				0	
EASTBOUND	Left	86	1	86	0	86	86	0	90	1	90	0	90	1	90	0	90	1	90
	Left-Through		0							0				0				0	
	Through	734	1	**436**	0	734	**436**	0	768	1	**456**	0	768	1	**456**	0	768	1	**456**
	Through-Right		1							1				1				1	
	Right	138	0	138	0	138	138	0	144	0	144	0	144	0	144	0	144	0	144
	Left-Through-Right		0							0				0				0	
	Left-Right		0							0				0				0	
WESTBOUND	Left	97	1	**97**	0	97	**97**	0	101	1	**101**	0	101	1	**101**	0	101	1	**101**
	Left-Through		0							0				0				0	
	Through	541	1	313	0	541	313	0	566	1	327	0	566	1	327	0	566	1	327
	Through-Right		1							1				1				1	
	Right	84	0	84	0	84	84	0	88	0	88	0	88	0	88	0	88	0	88
	Left-Through-Right		0							0				0				0	
	Left-Right		0							0				0				0	
CRITICAL VOLUMES		*North-South:*		506	*North-South:*		531	*North-South:*			532	*North-South:*			557	*North-South:*			557
		East-West:		533	*East-West:*		533	*East-West:*			557	*East-West:*			557	*East-West:*			557
		SUM:		1039	*SUM:*		1064	*SUM:*			1089	*SUM:*			1114	*SUM:*			1114
VOLUME/CAPACITY *(V/C)* RATIO:				0.756			0.774				0.792				0.810				0.810
V/C LESS ATSAC/ATCS ADJUSTMENT:				**0.656**			**0.674**				**0.692**				**0.710**				**0.710**
LEVEL OF SERVICE (LOS):				**B**			**B**				**B**				**C**				**C**

REMARKS: Alt. Route 2: Using only Boulevard Pit

Version: 1i Beta; 8/4/2011

PROJECT IMPACT

Change in *v/c* due to project:	0.018	Δ*v/c* after mitigation:	0.018
Significant impacted?	NO	Fully mitigated?	N/A

Level of Service Workheet
(Circular 212 Method)

I/S #:	North-South Street:	Glenoaks Boulevard	Year of Count:	2015	Ambient Growth: (%):	1.5	Conducted by:	City Traffic Counters	Date:	5/8/2015
CMA14	East-West Street:	Sheldon Street	Projection Year:	2018	Peak Hour:	AM	Reviewed by:		Project:	Pacoima Reservoir Project/1-13-4

No. of Phases				2				2				2				2				2			2
Opposed Ø'ing: N/S-1, E/W-2 or Both-3?				0				0				0				0				0			0
Right Turns: FREE-1, NRTOR-2 or OLA-3?	NB--	0	SB--	0	NB--	0	SB--	0	NB--	0	SB--	0	NB--	0	SB--	0	NB--	0	SB--	0	NB--	0	SB-- 0
	EB--	0	WB--	0	EB--	0	WB--	0	EB--	0	WB--	0	EB--	0	WB--	0	EB--	0	WB--	0	EB--	0	WB-- 0
ATSAC-1 or ATSAC+ATCS-2?				2				2				2				2				2			2
Override Capacity				0				0				0				0				0			0

MOVEMENT		EXISTING CONDITION			EXISTING PLUS PROJECT			FUTURE CONDITION W/O PROJECT				FUTURE CONDITION W/ PROJECT				FUTURE W/ PROJECT W/ MITIGATION			
		Volume	No. of Lanes	Lane Volume	Project Traffic	Total Volume	Lane Volume	Added Volume	Total Volume	No. of Lanes	Lane Volume	Added Volume	Total Volume	No. of Lanes	Lane Volume	Added Volume	Total Volume	No. of Lanes	Lane Volume
NORTHBOUND	Left	129	1	**129**	0	129	**129**	0	135	1	**135**	0	135	1	**135**	0	135	1	**135**
	Left-Through		0							0				0				0	
	Through	400	2	200	0	400	200	14	432	2	216	0	432	2	216	0	432	2	216
	Through-Right		0							0				0				0	
	Right	57	1	17	0	57	17	0	60	1	18	0	60	1	18	0	60	1	18
	Left-Through-Right		0							0				0				0	
	Left-Right		0							0				0				0	
SOUTHBOUND	Left	108	1	108	0	108	108	34	147	1	147	0	147	1	147	0	147	1	147
	Left-Through		0							0				0				0	
	Through	1154	1	**724**	0	1154	**724**	22	1229	1	**768**	0	1229	1	**768**	0	1229	1	**768**
	Through-Right		1							1				1				1	
	Right	293	0	293	0	293	293	0	306	0	306	0	306	0	306	0	306	0	306
	Left-Through-Right		0							0				0				0	
	Left-Right		0							0				0				0	
EASTBOUND	Left	202	1	**202**	0	202	**202**	0	211	1	**211**	0	211	1	**211**	0	211	1	**211**
	Left-Through		0							0				0				0	
	Through	250	1	182	0	250	182	0	261	1	190	0	261	1	190	0	261	1	190
	Through-Right		1							1				1				1	
	Right	113	0	113	0	113	113	0	118	0	118	0	118	0	118	0	118	0	118
	Left-Through-Right		0							0				0				0	
	Left-Right		0							0				0				0	
WESTBOUND	Left	81	1	81	0	81	81	0	85	1	85	0	85	1	85	0	85	1	85
	Left-Through		0							0				0				0	
	Through	444	1	**256**	0	444	**256**	0	464	1	**285**	0	464	1	**285**	0	464	1	**285**
	Through-Right		1							1				1				1	
	Right	68	0	68	0	68	68	34	105	0	105	0	105	0	105	0	105	0	105
	Left-Through-Right		0							0				0				0	
	Left-Right		0							0				0				0	
CRITICAL VOLUMES		*North-South:*		853	*North-South:*		853	*North-South:*			903	*North-South:*			903	*North-South:*			903
		East-West:		458	*East-West:*		458	*East-West:*			496	*East-West:*			496	*East-West:*			496
		SUM:		1311	*SUM:*		1311	*SUM:*			1399	*SUM:*			1399	*SUM:*			1399
VOLUME/CAPACITY *(V/C)* RATIO:				0.874			0.874				0.933				0.933				0.933
V/C LESS ATSAC/ATCS ADJUSTMENT:				**0.774**			**0.774**				**0.833**				**0.833**				**0.833**
LEVEL OF SERVICE (LOS):				**C**			**C**				**D**				**D**				**D**

REMARKS: Alt. Route 2: Using only Boulevard Pit

Version: 1i Beta; 8/4/2011

PROJECT IMPACT

Change in *v/c* due to project:	0.000	Δ*v/c* after mitigation:	0.000
Significant impacted?	NO	Fully mitigated?	N/A

Level of Service Workheet
(Circular 212 Method)

I/S #:	North-South Street:	Glenoaks Boulevard	Year of Count:	2015	Ambient Growth: (%):	1.5	Conducted by:	City Traffic Counters	Date:	5/8/2015
CMA14	East-West Street:	Sheldon Street	Projection Year:	2018	Peak Hour:	Mid-Day	Reviewed by:		Project:	Pacoima Reservoir Project/1-13-4

No. of Phases				2				2				2				2				2		2
Opposed Ø'ing: N/S-1, E/W-2 or Both-3?				0				0				0				0				0		0
Right Turns: FREE-1, NRTOR-2 or OLA-3?	NB--	0	SB--	0	NB--	0	SB--	0	NB--	0	SB--	0	NB--	0	SB--	0	NB--	0	SB--	0	NB--	0
	EB--	0	WB--	0	EB--	0	WB--	0	EB--	0	WB--	0	EB--	0	WB--	0	EB--	0	WB--	0	EB--	0
ATSAC-1 or ATSAC+ATCS-2?				2				2				2				2				2		2
Override Capacity				0				0				0				0				0		0

	MOVEMENT	EXISTING CONDITION			EXISTING PLUS PROJECT			FUTURE CONDITION W/O PROJECT				FUTURE CONDITION W/ PROJECT				FUTURE W/ PROJECT W/ MITIGATION			
		Volume	No. of Lanes	Lane Volume	Project Traffic	Total Volume	Lane Volume	Added Volume	Total Volume	No. of Lanes	Lane Volume	Added Volume	Total Volume	No. of Lanes	Lane Volume	Added Volume	Total Volume	No. of Lanes	Lane Volume
NORTHBOUND	Left	186	1	**186**	0	186	**186**	0	194	1	**194**	0	194	1	**194**	0	194	1	**194**
	Left-Through		0							0				0				0	
	Through	436	2	218	0	436	218	21	477	2	239	0	477	2	239	0	477	2	239
	Through-Right		0							0				0				0	
	Right	51	1	29	0	51	29	0	53	1	30	0	53	1	30	0	53	1	30
	Left-Through-Right		0							0				0				0	
	Left-Right		0							0				0				0	
SOUTHBOUND	Left	85	1	85	0	85	85	34	123	1	123	0	123	1	123	0	123	1	123
	Left-Through		0							0				0				0	
	Through	482	1	**313**	0	482	**313**	15	519	1	**335**	0	519	1	**335**	0	519	1	**335**
	Through-Right		1							1				1				1	
	Right	144	0	144	0	144	144	0	151	0	151	0	151	0	151	0	151	0	151
	Left-Through-Right		0							0				0				0	
	Left-Right		0							0				0				0	
EASTBOUND	Left	172	1	**172**	0	172	**172**	0	180	1	**180**	0	180	1	**180**	0	180	1	**180**
	Left-Through		0							0				0				0	
	Through	241	1	175	0	241	175	0	252	1	183	0	252	1	183	0	252	1	183
	Through-Right		1							1				1				1	
	Right	109	0	109	0	109	109	0	114	0	114	0	114	0	114	0	114	0	114
	Left-Through-Right		0							0				0				0	
	Left-Right		0							0				0				0	
WESTBOUND	Left	45	1	45	0	45	45	0	47	1	47	0	47	1	47	0	47	1	47
	Left-Through		0							0				0				0	
	Through	173	1	**115**	0	173	**115**	0	181	1	**137**	0	181	1	**137**	0	181	1	**137**
	Through-Right		1							1				1				1	
	Right	56	0	56	0	56	56	34	93	0	93	0	93	0	93	0	93	0	93
	Left-Through-Right		0							0				0				0	
	Left-Right		0							0				0				0	
CRITICAL VOLUMES		*North-South:*		499	*North-South:*		499	*North-South:*			529	*North-South:*			529	*North-South:*			529
		East-West:		287	*East-West:*		287	*East-West:*			317	*East-West:*			317	*East-West:*			317
		SUM:		786	*SUM:*		786	*SUM:*			846	*SUM:*			846	*SUM:*			846
VOLUME/CAPACITY *(V/C)* RATIO:				0.524			0.524				0.564				0.564				0.564
V/C LESS ATSAC/ATCS ADJUSTMENT:				**0.424**			**0.424**				**0.464**				**0.464**				**0.464**
LEVEL OF SERVICE (LOS):				**A**			**A**				**A**				**A**				**A**

REMARKS: Alt. Route 2: Using only Boulevard Pit

Version: 1i Beta; 8/4/2011

PROJECT IMPACT

Change in *v/c* due to project:	0.000	Δ*v/c* after mitigation:	0.000
Significant impacted?	NO	Fully mitigated?	N/A

Level of Service Workheet
(Circular 212 Method)

I/S #:	North-South Street:	Glenoaks Boulevard	Year of Count:	2015	Ambient Growth: (%):	1.5	Conducted by:	City Traffic Counters	Date:	5/8/2015
CMA14	East-West Street:	Sheldon Street	Projection Year:	2018	Peak Hour:	PM	Reviewed by:		Project:	Pacoima Reservoir Project/1-13-4

No. of Phases				2				2				2				2				2			2
Opposed Ø'ing: N/S-1, E/W-2 or Both-3?				0				0				0				0				0			0
Right Turns: FREE-1, NRTOR-2 or OLA-3?	NB--	0	SB--	0	NB--	0	SB--	0	NB--	0	SB--	0	NB--	0	SB--	0	NB--	0	SB--	0			
	EB--	0	WB--	0	EB--	0	WB--	0	EB--	0	WB--	0	EB--	0	WB--	0	EB--	0	WB--	0			
ATSAC-1 or ATSAC+ATCS-2?				2				2				2				2				2			2
Override Capacity				0				0				0				0				0			0

MOVEMENT		EXISTING CONDITION			EXISTING PLUS PROJECT			FUTURE CONDITION W/O PROJECT				FUTURE CONDITION W/ PROJECT				FUTURE W/ PROJECT W/ MITIGATION			
		Volume	No. of Lanes	Lane Volume	Project Traffic	Total Volume	Lane Volume	Added Volume	Total Volume	No. of Lanes	Lane Volume	Added Volume	Total Volume	No. of Lanes	Lane Volume	Added Volume	Total Volume	No. of Lanes	Lane Volume
NORTHBOUND	Left	185	1	**185**	0	185	**185**	0	193	1	**193**	0	193	1	**193**	0	193	1	**193**
	Left-Through		0							0				0				0	
	Through	822	2	411	0	822	411	23	883	2	442	0	883	2	442	0	883	2	442
	Through-Right		0							0				0				0	
	Right	63	1	36	0	63	36	0	66	1	38	0	66	1	38	0	66	1	38
	Left-Through-Right		0							0				0				0	
	Left-Right		0							0				0				0	
SOUTHBOUND	Left	107	1	107	0	107	107	34	146	1	146	0	146	1	146	0	146	1	146
	Left-Through		0							0				0				0	
	Through	697	1	**436**	0	697	**436**	17	746	1	**465**	0	746	1	**465**	0	746	1	**465**
	Through-Right		1							1				1				1	
	Right	175	0	175	0	175	175	0	183	0	183	0	183	0	183	0	183	0	183
	Left-Through-Right		0							0				0				0	
	Left-Right		0							0				0				0	
EASTBOUND	Left	279	1	**279**	0	279	**279**	0	292	1	**292**	0	292	1	**292**	0	292	1	**292**
	Left-Through		0							0				0				0	
	Through	408	1	280	0	408	280	0	427	1	293	0	427	1	293	0	427	1	293
	Through-Right		1							1				1				1	
	Right	151	0	151	0	151	151	0	158	0	158	0	158	0	158	0	158	0	158
	Left-Through-Right		0							0				0				0	
	Left-Right		0							0				0				0	
WESTBOUND	Left	54	1	54	0	54	54	0	56	1	56	0	56	1	56	0	56	1	56
	Left-Through		0							0				0				0	
	Through	208	1	**139**	0	208	**139**	0	218	1	**162**	0	218	1	**162**	0	218	1	**162**
	Through-Right		1							1				1				1	
	Right	69	0	69	0	69	69	34	106	0	106	0	106	0	106	0	106	0	106
	Left-Through-Right		0							0				0				0	
	Left-Right		0							0				0				0	
CRITICAL VOLUMES		*North-South:*		621	*North-South:*		621	*North-South:*			658	*North-South:*			658	*North-South:*			658
		East-West:		418	*East-West:*		418	*East-West:*			454	*East-West:*			454	*East-West:*			454
		SUM:		1039	*SUM:*		1039	*SUM:*			1112	*SUM:*			1112	*SUM:*			1112
VOLUME/CAPACITY *(V/C)* RATIO:				0.693			0.693				0.741				0.741				0.741
V/C LESS ATSAC/ATCS ADJUSTMENT:				**0.593**			**0.593**				**0.641**				**0.641**				**0.641**
LEVEL OF SERVICE (LOS):				**A**			**A**				**B**				**B**				**B**

REMARKS: Alt. Route 2: Using only Boulevard Pit

Version: 1i Beta; 8/4/2011

PROJECT IMPACT

Change in *v/c* due to project:	0.000	Δ*v/c* after mitigation:	0.000
Significant impacted?	NO	Fully mitigated?	N/A

Level of Service Workheet
(Circular 212 Method)

I/S #:	North-South Street:	Laurel Canyon Boulevard	Year of Count:	2015	Ambient Growth: (%):	1.5	Conducted by:	City Traffic Counters	Date:	4/28/2015
CMA15	East-West Street:	Paxton Street	Projection Year:	2018	Peak Hour:	AM	Reviewed by:		Project:	Pacoima Reservoir Project/1-13-4

No. of Phases				3				3				3				3				3		
Opposed Ø'ing: N/S-1, E/W-2 or Both-3?				0				0				0				0				0		
Right Turns: FREE-1, NRTOR-2 or OLA-3?	NB--	0	SB--	0	NB--	0	SB--	0	NB--	0	SB--	0	NB--	0	SB--	0	NB--	0	SB--	0		
	EB--	0	WB--	0	EB--	0	WB--	0	EB--	0	WB--	0	EB--	0	WB--	0	EB--	0	WB--	0		
ATSAC-1 or ATSAC+ATCS-2?				2				2				2				2				2		
Override Capacity				0				0				0				0				0		

	MOVEMENT	EXISTING CONDITION			EXISTING PLUS PROJECT			FUTURE CONDITION W/O PROJECT				FUTURE CONDITION W/ PROJECT				FUTURE W/ PROJECT W/ MITIGATION			
		Volume	No. of Lanes	Lane Volume	Project Traffic	Total Volume	Lane Volume	Added Volume	Total Volume	No. of Lanes	Lane Volume	Added Volume	Total Volume	No. of Lanes	Lane Volume	Added Volume	Total Volume	No. of Lanes	Lane Volume
NORTHBOUND	Left	63	1	**63**	0	63	**63**	6	72	1	**72**	0	72	1	**72**	0	72	1	**72**
	Left-Through		0							0				0				0	
	Through	949	1	542	0	949	542	14	1006	1	573	0	1006	1	573	0	1006	1	573
	Through-Right		1							1				1				1	
	Right	134	0	134	0	134	134	0	140	0	140	0	140	0	140	0	140	0	140
	Left-Through-Right		0							0				0				0	
	Left-Right		0							0				0				0	
SOUTHBOUND	Left	145	1	145	0	145	145	0	152	1	152	0	152	1	152	0	152	1	152
	Left-Through		0							0				0				0	
	Through	1292	1	**789**	0	1292	**789**	21	1372	1	**835**	0	1372	1	**835**	0	1372	1	**835**
	Through-Right		1							1				1				1	
	Right	285	0	285	0	285	285	0	298	0	298	0	298	0	298	0	298	0	298
	Left-Through-Right		0							0				0				0	
	Left-Right		0							0				0				0	
EASTBOUND	Left	79	1	79	0	79	79	0	83	1	83	0	83	1	83	0	83	1	83
	Left-Through		0							0				0				0	
	Through	588	1	**317**	20	608	**327**	1	616	1	**336**	20	636	1	**346**	0	636	1	**346**
	Through-Right		1							1				1				1	
	Right	45	0	45	0	45	45	8	55	0	55	0	55	0	55	0	55	0	55
	Left-Through-Right		0							0				0				0	
	Left-Right		0							0				0				0	
WESTBOUND	Left	97	1	**97**	0	97	**97**	0	101	1	**101**	0	101	1	**101**	0	101	1	**101**
	Left-Through		0							0				0				0	
	Through	410	1	308	20	430	318	1	430	1	323	20	450	1	333	0	450	1	333
	Through-Right		1							1				1				1	
	Right	206	0	206	0	206	206	0	215	0	215	0	215	0	215	0	215	0	215
	Left-Through-Right		0							0				0				0	
	Left-Right		0							0				0				0	
CRITICAL VOLUMES			*North-South:*	852		*North-South:*	852		*North-South:*	907			*North-South:*	907			*North-South:*	907	
			East-West:	414		*East-West:*	424		*East-West:*	437			*East-West:*	447			*East-West:*	447	
			SUM:	1266		*SUM:*	1276		*SUM:*	1344			*SUM:*	1354			*SUM:*	1354	
VOLUME/CAPACITY *(V/C)* RATIO:				0.888			0.895			0.943				0.950				0.950	
V/C LESS ATSAC/ATCS ADJUSTMENT:				**0.788**			**0.795**			**0.843**				**0.850**				**0.850**	
LEVEL OF SERVICE (LOS):				**C**			**C**			**D**				**D**				**D**	

REMARKS: Alt. Route 2: Using only Boulevard Pit

Version: 1i Beta; 8/4/2011

PROJECT IMPACT

Change in *v/c* due to project:	0.007	Δ*v/c* after mitigation:	0.007
Significant impacted?	NO	Fully mitigated?	N/A

Level of Service Workheet
(Circular 212 Method)

I/S #:	North-South Street:	Laurel Canyon Boulevard	Year of Count:	2015	Ambient Growth: (%):	1.5	Conducted by:	City Traffic Counters	Date:	4/28/2015
CMA15	East-West Street:	Paxton Street	Projection Year:	2018	Peak Hour:	Mid-Day	Reviewed by:		Project:	Pacoima Reservoir Project/1-13-4

No. of Phases				3				3				3				3				3			3
Opposed Ø'ing: N/S-1, E/W-2 or Both-3?				0				0				0				0				0			0
Right Turns: FREE-1, NRTOR-2 or OLA-3?	NB--	0	SB--	0	NB--	0	SB--	0	NB--	0	SB--	0	NB--	0	SB--	0	NB--	0	SB--	0	NB--	0	SB--	0
	EB--	0	WB--	0	EB--	0	WB--	0	EB--	0	WB--	0	EB--	0	WB--	0	EB--	0	WB--	0	EB--	0	WB--	0
ATSAC-1 or ATSAC+ATCS-2?				2				2				2				2				2			2
Override Capacity				0				0				0				0				0			0

	MOVEMENT	EXISTING CONDITION			EXISTING PLUS PROJECT			FUTURE CONDITION W/O PROJECT				FUTURE CONDITION W/ PROJECT				FUTURE W/ PROJECT W/ MITIGATION			
		Volume	No. of Lanes	Lane Volume	Project Traffic	Total Volume	Lane Volume	Added Volume	Total Volume	No. of Lanes	Lane Volume	Added Volume	Total Volume	No. of Lanes	Lane Volume	Added Volume	Total Volume	No. of Lanes	Lane Volume
NORTHBOUND	Left	83	1	83	0	83	83	1	88	1	88	0	88	1	88	0	88	1	88
	Left-Through		0							0				0				0	
	Through	548	1	**331**	0	548	**331**	1	574	1	**346**	0	574	1	**346**	0	574	1	**346**
	Through-Right		1							1				1				1	
	Right	113	0	113	0	113	113	0	118	0	118	0	118	0	118	0	118	0	118
	Left-Through-Right		0							0				0				0	
	Left-Right		0							0				0				0	
SOUTHBOUND	Left	155	1	**155**	0	155	**155**	0	162	1	**162**	0	162	1	**162**	0	162	1	**162**
	Left-Through		0							0				0				0	
	Through	510	1	292	0	510	292	1	534	1	305	0	534	1	305	0	534	1	305
	Through-Right		1							1				1				1	
	Right	73	0	73	0	73	73	0	76	0	76	0	76	0	76	0	76	0	76
	Left-Through-Right		0							0				0				0	
	Left-Right		0							0				0				0	
EASTBOUND	Left	114	1	**114**	0	114	**114**	0	119	1	**119**	0	119	1	**119**	0	119	1	**119**
	Left-Through		0							0				0				0	
	Through	307	1	170	20	327	180	1	322	1	179	20	342	1	189	0	342	1	189
	Through-Right		1							1				1				1	
	Right	33	0	33	0	33	33	1	36	0	36	0	36	0	36	0	36	0	36
	Left-Through-Right		0							0				0				0	
	Left-Right		0							0				0				0	
WESTBOUND	Left	78	1	78	0	78	78	0	82	1	82	0	82	1	82	0	82	1	82
	Left-Through		0							0				0				0	
	Through	240	1	**178**	20	260	**188**	1	252	1	**187**	20	272	1	**197**	0	272	1	**197**
	Through-Right		1							1				1				1	
	Right	116	0	116	0	116	116	0	121	0	121	0	121	0	121	0	121	0	121
	Left-Through-Right		0							0				0				0	
	Left-Right		0							0				0				0	
CRITICAL VOLUMES			*North-South:*	486		*North-South:*	486		*North-South:*	508			*North-South:*	508			*North-South:*	508	
			East-West:	292		*East-West:*	302		*East-West:*	306			*East-West:*	316			*East-West:*	316	
			SUM:	778		*SUM:*	788		*SUM:*	814			*SUM:*	824			*SUM:*	824	
VOLUME/CAPACITY *(V/C)* RATIO:				0.546			0.553				0.571				0.578				0.578
V/C LESS ATSAC/ATCS ADJUSTMENT:				**0.446**			**0.453**				**0.471**				**0.478**				**0.478**
LEVEL OF SERVICE (LOS):				**A**			**A**				**A**				**A**				**A**

REMARKS: Alt. Route 2: Using only Boulevard Pit

Version: 1i Beta; 8/4/2011

PROJECT IMPACT

Change in *v/c* due to project:	0.007	Δ*v/c* after mitigation:	0.007
Significant impacted?	NO	Fully mitigated?	N/A

Level of Service Workheet
(Circular 212 Method)

I/S #:	North-South Street:	Laurel Canyon Boulevard	Year of Count:	2015	Ambient Growth: (%):	1.5	Conducted by:	City Traffic Counters	Date:	4/28/2015
CMA15	East-West Street:	Paxton Street	Projection Year:	2018	Peak Hour:	PM	Reviewed by:		Project:	Pacoima Reservoir Project/1-13-4

No. of Phases				3				3				3				3				3			3
Opposed Ø'ing: N/S-1, E/W-2 or Both-3?				0				0				0				0				0			0
Right Turns: FREE-1, NRTOR-2 or OLA-3?	NB--	0	SB--	0	NB--	0	SB--	0	NB--	0	SB--	0	NB--	0	SB--	0	NB--	0	SB--	0	NB--	0	SB--	0
	EB--	0	WB--	0	EB--	0	WB--	0	EB--	0	WB--	0	EB--	0	WB--	0	EB--	0	WB--	0	EB--	0	WB--	0
ATSAC-1 or ATSAC+ATCS-2?				2				2				2				2				2			2
Override Capacity				0				0				0				0				0			0

	MOVEMENT	EXISTING CONDITION			EXISTING PLUS PROJECT			FUTURE CONDITION W/O PROJECT				FUTURE CONDITION W/ PROJECT				FUTURE W/ PROJECT W/ MITIGATION			
		Volume	No. of Lanes	Lane Volume	Project Traffic	Total Volume	Lane Volume	Added Volume	Total Volume	No. of Lanes	Lane Volume	Added Volume	Total Volume	No. of Lanes	Lane Volume	Added Volume	Total Volume	No. of Lanes	Lane Volume
NORTHBOUND	Left	160	1	160	0	160	160	5	172	1	172	0	172	1	172	0	172	1	172
	Left-Through		0							0				0				0	
	Through	1224	1	**693**	0	1224	**693**	11	1291	1	**730**	0	1291	1	**730**	0	1291	1	**730**
	Through-Right		1							1				1				1	
	Right	162	0	162	0	162	162	0	169	0	169	0	169	0	169	0	169	0	169
	Left-Through-Right		0							0				0				0	
	Left-Right		0							0				0				0	
SOUTHBOUND	Left	193	1	**193**	0	193	**193**	0	202	1	**202**	0	202	1	**202**	0	202	1	**202**
	Left-Through		0							0				0				0	
	Through	1050	1	643	0	1050	643	8	1106	1	677	0	1106	1	677	0	1106	1	677
	Through-Right		1							1				1				1	
	Right	236	0	236	0	236	236	0	247	0	247	0	247	0	247	0	247	0	247
	Left-Through-Right		0							0				0				0	
	Left-Right		0							0				0				0	
EASTBOUND	Left	89	1	89	0	89	89	0	93	1	93	0	93	1	93	0	93	1	93
	Left-Through		0							0				0				0	
	Through	682	1	**399**	20	702	**409**	1	714	1	**420**	20	734	1	**430**	0	734	1	**430**
	Through-Right		1							1				1				1	
	Right	116	0	116	0	116	116	4	125	0	125	0	125	0	125	0	125	0	125
	Left-Through-Right		0							0				0				0	
	Left-Right		0							0				0				0	
WESTBOUND	Left	101	1	**101**	0	101	**101**	0	106	1	**106**	0	106	1	**106**	0	106	1	**106**
	Left-Through		0							0				0				0	
	Through	550	1	327	20	570	337	1	576	1	342	20	596	1	352	0	596	1	352
	Through-Right		1							1				1				1	
	Right	103	0	103	0	103	103	0	108	0	108	0	108	0	108	0	108	0	108
	Left-Through-Right		0							0				0				0	
	Left-Right		0							0				0				0	
CRITICAL VOLUMES		*North-South:*		886	*North-South:*		886	*North-South:*			932	*North-South:*			932	*North-South:*			932
		East-West:		500	*East-West:*		510	*East-West:*			526	*East-West:*			536	*East-West:*			536
		SUM:		1386	*SUM:*		1396	*SUM:*			1458	*SUM:*			1468	*SUM:*			1468
VOLUME/CAPACITY *(V/C)* RATIO:				0.973			0.980				1.023				1.030				1.030
V/C LESS ATSAC/ATCS ADJUSTMENT:				**0.873**			**0.880**				**0.923**				**0.930**				**0.930**
LEVEL OF SERVICE (LOS):				**D**			**D**				**E**				**E**				**E**

REMARKS: Alt. Route 2: Using only Boulevard Pit

Version: 1i Beta; 8/4/2011

PROJECT IMPACT

Change in *v/c* due to project:	0.007	Δ*v/c* after mitigation:	0.007
Significant impacted?	NO	Fully mitigated?	N/A

Level of Service Workheet
(Circular 212 Method)

I/S #:	North-South Street:	Haddon Street	Year of Count:	2015	Ambient Growth: (%):	1.5	Conducted by:	City Traffic Counters	Date:	4/28/2015
CMA16	East-West Street:	Paxton Street	Projection Year:	2018	Peak Hour:	AM	Reviewed by:		Project:	Pacoima Reservoir Project/1-13-4

	Existing Condition			Existing Plus Project			Future Condition W/O Project			Future Condition W/ Project			Future W/ Project W/ Mitigation		
No. of Phases			0			0			0			0			0
Opposed Ø'ing: N/S-1, E/W-2 or Both-3?			0			0			0			0			0
Right Turns: FREE-1, NRTOR-2 or OLA-3?	NB-- 0	SB--	0	NB-- 0	SB--	0	NB-- 0	SB--	0	NB-- 0	SB--	0	NB-- 0	SB--	0
	EB-- 0	WB--	0	EB-- 0	WB--	0	EB-- 0	WB--	0	EB-- 0	WB--	0	EB-- 0	WB--	0
ATSAC-1 or ATSAC+ATCS-2?			0			0			0			0			0
Override Capacity			1200			#####			1200			1200			1200

	MOVEMENT	Existing Condition Volume	No. of Lanes	Lane Volume	Existing Plus Project Project Traffic	Total Volume	Lane Volume	Future Condition W/O Project Added Volume	Total Volume	No. of Lanes	Lane Volume	Future Condition W/ Project Added Volume	Total Volume	No. of Lanes	Lane Volume	Future W/ Project W/ Mitigation Added Volume	Total Volume	No. of Lanes	Lane Volume
NORTHBOUND	Left	24	0	24	0	24	24	0	25	0	25	0	25	0	25	0	25	0	25
	Left-Through		0							0				0				0	
	Through	0	0	**108**	0	0	**108**	0	0	0	**113**	0	0	0	**113**	0	0	0	**113**
	Through-Right		0							0				0				0	
	Right	84	0	0	0	84	0	0	88	0	0	0	88	0	0	0	88	0	0
	Left-Through-Right		1							1				1				1	
	Left-Right		0							0				0				0	
SOUTHBOUND	Left	1	0	**1**	0	1	**1**	0	1	0	**1**	0	1	0	**1**	0	1	0	**1**
	Left-Through		0							0				0				0	
	Through	0	0	9	0	0	9	0	0	0	9	0	0	0	9	0	0	0	9
	Through-Right		0							0				0				0	
	Right	8	0	0	0	8	0	0	8	0	0	0	8	0	0	0	8	0	0
	Left-Through-Right		1							1				1				1	
	Left-Right		0							0				0				0	
EASTBOUND	Left	9	1	9	0	9	9	0	9	1	9	0	9	1	9	0	9	1	9
	Left-Through		0							0				0				0	
	Through	807	1	**416**	20	827	**426**	1	845	1	**436**	20	865	1	**446**	0	865	1	**446**
	Through-Right		1							1				1				1	
	Right	25	0	25	0	25	25	0	26	0	26	0	26	0	26	0	26	0	26
	Left-Through-Right		0							0				0				0	
	Left-Right		0							0				0				0	
WESTBOUND	Left	73	1	**73**	0	73	**73**	0	76	1	**76**	0	76	1	**76**	0	76	1	**76**
	Left-Through		0							0				0				0	
	Through	766	1	386	20	786	396	1	802	1	404	20	822	1	414	0	822	1	414
	Through-Right		1							1				1				1	
	Right	5	0	5	0	5	5	0	5	0	5	0	5	0	5	0	5	0	5
	Left-Through-Right		0							0				0				0	
	Left-Right		0							0				0				0	
CRITICAL VOLUMES		*North-South:*		109	*North-South:*		109	*North-South:*			114	*North-South:*			114	*North-South:*			114
		East-West:		489	*East-West:*		499	*East-West:*			512	*East-West:*			522	*East-West:*			522
		SUM:		598	*SUM:*		608	*SUM:*			626	*SUM:*			636	*SUM:*			636
VOLUME/CAPACITY *(V/C)* RATIO:				0.498			0.507				0.522				0.530				0.530
V/C LESS ATSAC/ATCS ADJUSTMENT:				0.498			0.507				0.522				0.530				0.530
LEVEL OF SERVICE (LOS):				A			A				A				A				A

REMARKS: Alt. Route 2: Using only Boulevard Pit

Version: 1i Beta; 8/4/2011

PROJECT IMPACT

Change in *v/c* due to project:	0.008	Δ*v/c* after mitigation:	0.008
Significant impacted?	NO	Fully mitigated?	N/A

Level of Service Workheet
(Circular 212 Method)

I/S #:	North-South Street:	Haddon Street	Year of Count:	2015	Ambient Growth: (%):	1.5	Conducted by:	City Traffic Counters	Date:	4/28/2015
CMA16	East-West Street:	Paxton Street	Projection Year:	2018	Peak Hour:	Mid-Day	Reviewed by:		Project:	Pacoima Reservoir Project/1-13-4

No. of Phases				0				0				0				0				0	
Opposed Ø'ing: N/S-1, E/W-2 or Both-3?				0				0				0				0				0	
Right Turns: FREE-1, NRTOR-2 or OLA-3?	NB--	0	SB--	0	NB--	0	SB--	0	NB--	0	SB--	0	NB--	0	SB--	0	NB--	0	SB--	0	
	EB--	0	WB--	0	EB--	0	WB--	0	EB--	0	WB--	0	EB--	0	WB--	0	EB--	0	WB--	0	
ATSAC-1 or ATSAC+ATCS-2?				0				0				0				0				0	
Override Capacity				1200				#####				1200				1200				1200	

MOVEMENT		EXISTING CONDITION			EXISTING PLUS PROJECT			FUTURE CONDITION W/O PROJECT				FUTURE CONDITION W/ PROJECT				FUTURE W/ PROJECT W/ MITIGATION			
		Volume	No. of Lanes	Lane Volume	Project Traffic	Total Volume	Lane Volume	Added Volume	Total Volume	No. of Lanes	Lane Volume	Added Volume	Total Volume	No. of Lanes	Lane Volume	Added Volume	Total Volume	No. of Lanes	Lane Volume
NORTHBOUND	Left	8	0	8	0	8	8	0	8	0	8	0	8	0	8	0	8	0	8
	Left-Through		0							0				0				0	
	Through	3	0	**39**	0	3	**39**	0	3	0	**40**	0	3	0	**40**	0	3	0	**40**
	Through-Right		0							0				0				0	
	Right	28	0	0	0	28	0	0	29	0	0	0	29	0	0	0	29	0	0
	Left-Through-Right		1							1				1				1	
	Left-Right		0							0				0				0	
SOUTHBOUND	Left	2	0	**2**	0	2	**2**	0	2	0	**2**	0	2	0	**2**	0	2	0	**2**
	Left-Through		0							0				0				0	
	Through	0	0	9	0	0	9	0	0	0	9	0	0	0	9	0	0	0	9
	Through-Right		0							0				0				0	
	Right	7	0	0	0	7	0	0	7	0	0	0	7	0	0	0	7	0	0
	Left-Through-Right		1							1				1				1	
	Left-Right		0							0				0				0	
EASTBOUND	Left	6	1	6	0	6	6	0	6	1	6	0	6	1	6	0	6	1	6
	Left-Through		0							0				0				0	
	Through	483	1	**250**	20	503	**260**	1	506	1	**262**	20	526	1	**272**	0	526	1	**272**
	Through-Right		1							1				1				1	
	Right	17	0	17	0	17	17	0	18	0	18	0	18	0	18	0	18	0	18
	Left-Through-Right		0							0				0				0	
	Left-Right		0							0				0				0	
WESTBOUND	Left	49	1	**49**	0	49	**49**	0	51	1	**51**	0	51	1	**51**	0	51	1	**51**
	Left-Through		0							0				0				0	
	Through	526	1	264	20	546	274	1	551	1	277	20	571	1	287	0	571	1	287
	Through-Right		1							1				1				1	
	Right	2	0	2	0	2	2	0	2	0	2	0	2	0	2	0	2	0	2
	Left-Through-Right		0							0				0				0	
	Left-Right		0							0				0				0	
CRITICAL VOLUMES		North-South:		41	North-South:		41	North-South:			42	North-South:			42	North-South:			42
		East-West:		299	East-West:		309	East-West:			313	East-West:			323	East-West:			323
		SUM:		340	SUM:		350	SUM:			355	SUM:			365	SUM:			365
VOLUME/CAPACITY (V/C) RATIO:				0.283			0.292				0.296				0.304				0.304
V/C LESS ATSAC/ATCS ADJUSTMENT:				0.283			0.292				0.296				0.304				0.304
LEVEL OF SERVICE (LOS):				A			A				A				A				A

REMARKS: Alt. Route 2: Using only Boulevard Pit

Version: 1i Beta; 8/4/2011

PROJECT IMPACT

Change in *v/c* due to project:	0.008	Δ*v/c* after mitigation:	0.008
Significant impacted?	NO	Fully mitigated?	N/A

Level of Service Workheet
(Circular 212 Method)

I/S #:	North-South Street:	Haddon Street	Year of Count:	2015	Ambient Growth: (%):	1.5	Conducted by:	City Traffic Counters	Date:	4/28/2015
CMA16	East-West Street:	Paxton Street	Projection Year:	2018	Peak Hour:	PM	Reviewed by:		Project:	Pacoima Reservoir Project/1-13-4

No. of Phases				0				0				0				0				0			
Opposed Ø'ing: N/S-1, E/W-2 or Both-3?				0				0				0				0				0			
Right Turns: FREE-1, NRTOR-2 or OLA-3?	NB--	0	SB--	0	NB--	0	SB--	0	NB--	0	SB--	0	NB--	0	SB--	0	NB--	0	SB--	0			
	EB--	0	WB--	0	EB--	0	WB--	0	EB--	0	WB--	0	EB--	0	WB--	0	EB--	0	WB--	0			
ATSAC-1 or ATSAC+ATCS-2?				0				0				0				0				0			
Override Capacity				1200				#####				1200				1200				1200			

	MOVEMENT	EXISTING CONDITION			EXISTING PLUS PROJECT			FUTURE CONDITION W/O PROJECT				FUTURE CONDITION W/ PROJECT				FUTURE W/ PROJECT W/ MITIGATION			
		Volume	No. of Lanes	Lane Volume	Project Traffic	Total Volume	Lane Volume	Added Volume	Total Volume	No. of Lanes	Lane Volume	Added Volume	Total Volume	No. of Lanes	Lane Volume	Added Volume	Total Volume	No. of Lanes	Lane Volume
NORTHBOUND	Left	10	0	10	0	10	10	0	10	0	10	0	10	0	10	0	10	0	10
	Left-Through		0							0				0				0	
	Through	1	0	**82**	0	1	**82**	0	1	0	**85**	0	1	0	**85**	0	1	0	**85**
	Through-Right		0							0				0				0	
	Right	71	0	0	0	71	0	0	74	0	0	0	74	0	0	0	74	0	0
	Left-Through-Right		1							1				1				1	
	Left-Right		0							0				0				0	
SOUTHBOUND	Left	5	0	**5**	0	5	**5**	0	5	0	**5**	0	5	0	**5**	0	5	0	**5**
	Left-Through		0							0				0				0	
	Through	0	0	10	0	0	10	0	0	0	10	0	0	0	10	0	0	0	10
	Through-Right		0							0				0				0	
	Right	5	0	0	0	5	0	0	5	0	0	0	5	0	0	0	5	0	0
	Left-Through-Right		1							1				1				1	
	Left-Right		0							0				0				0	
EASTBOUND	Left	18	1	18	0	18	18	0	19	1	19	0	19	1	19	0	19	1	19
	Left-Through		0							0				0				0	
	Through	1002	1	**518**	20	1022	**528**	1	1049	1	**543**	20	1069	1	**553**	0	1069	1	**553**
	Through-Right		1							1				1				1	
	Right	34	0	34	0	34	34	0	36	0	36	0	36	0	36	0	36	0	36
	Left-Through-Right		0							0				0				0	
	Left-Right		0							0				0				0	
WESTBOUND	Left	70	1	**70**	0	70	**70**	0	73	1	**73**	0	73	1	**73**	0	73	1	**73**
	Left-Through		0							0				0				0	
	Through	681	1	344	20	701	354	1	713	1	360	20	733	1	370	0	733	1	370
	Through-Right		1							1				1				1	
	Right	7	0	7	0	7	7	0	7	0	7	0	7	0	7	0	7	0	7
	Left-Through-Right		0							0				0				0	
	Left-Right		0							0				0				0	
CRITICAL VOLUMES		North-South:		87	North-South:		87	North-South:			90	North-South:			90	North-South:			90
		East-West:		588	East-West:		598	East-West:			616	East-West:			626	East-West:			626
		SUM:		675	SUM:		685	SUM:			706	SUM:			716	SUM:			716
VOLUME/CAPACITY (V/C) RATIO:				0.563			0.571				0.588				0.597				0.597
V/C LESS ATSAC/ATCS ADJUSTMENT:				0.563			0.571				0.588				0.597				0.597
LEVEL OF SERVICE (LOS):				A			A				A				A				A

REMARKS: Alt. Route 2: Using only Boulevard Pit

Version: 1i Beta; 8/4/2011

PROJECT IMPACT

Change in *v/c* due to project:	0.009	Δ*v/c* after mitigation:	0.009
Significant impacted?	NO	Fully mitigated?	N/A

Level of Service Workheet
(Circular 212 Method)

I/S #:	North-South Street:	Kewen Avenue	Year of Count:	2015	Ambient Growth: (%):	1.5	Conducted by:	City Traffic Counters	Date:	4/28/2015
CMA17	East-West Street:	Paxton Street	Projection Year:	2018	Peak Hour:	AM	Reviewed by:		Project:	Pacoima Reservoir Project/1-13-4

No. of Phases			0				0				0				0				0
Opposed Ø'ing: N/S-1, E/W-2 or Both-3?			0				0				0				0				0
Right Turns: FREE-1, NRTOR-2 or OLA-3?	NB-- 0	SB--	0	NB-- 0	SB--	0	NB-- 0	SB--	0	NB-- 0	SB--	0	NB-- 0	SB--	0	NB-- 0	SB--	0
	EB-- 0	WB--	0	EB-- 0	WB--	0	EB-- 0	WB--	0	EB-- 0	WB--	0	EB-- 0	WB--	0	EB-- 0	WB--	0
ATSAC-1 or ATSAC+ATCS-2?			0			0			0			0			0			0
Override Capacity			1200			#####			1200			1200			1200			1200

	MOVEMENT	EXISTING CONDITION			EXISTING PLUS PROJECT			FUTURE CONDITION W/O PROJECT				FUTURE CONDITION W/ PROJECT				FUTURE W/ PROJECT W/ MITIGATION			
		Volume	No. of Lanes	Lane Volume	Project Traffic	Total Volume	Lane Volume	Added Volume	Total Volume	No. of Lanes	Lane Volume	Added Volume	Total Volume	No. of Lanes	Lane Volume	Added Volume	Total Volume	No. of Lanes	Lane Volume
NORTHBOUND	Left	36	0	36	0	36	36	0	38	0	38	0	38	0	38	0	38	0	38
	Left-Through		0							0				0				0	
	Through	0	0	0	0	0	0	0	0	0	0	0	0	0	0	0	0	0	0
	Through-Right		0							0				0				0	
	Right	86	0	**122**	0	86	**122**	0	90	0	**128**	0	90	0	**128**	0	90	0	**128**
	Left-Through-Right		0							0				0				0	
	Left-Right		1							1				1				1	
SOUTHBOUND	Left	0	0	**0**	0	0	**0**	0	0	0	**0**	0	0	0	**0**	0	0	0	**0**
	Left-Through		0							0				0				0	
	Through	0	0	0	0	0	0	0	0	0	0	0	0	0	0	0	0	0	0
	Through-Right		0							0				0				0	
	Right	0	0	0	0	0	0	0	0	0	0	0	0	0	0	0	0	0	0
	Left-Through-Right		0							0				0				0	
	Left-Right		0							0				0				0	
EASTBOUND	Left	0	0	0	0	0	0	0	0	0	0	0	0	0	0	0	0	0	0
	Left-Through		0							0				0				0	
	Through	833	1	**444**	20	853	**454**	1	872	1	**464**	20	892	1	**474**	0	892	1	**474**
	Through-Right		1							1				1				1	
	Right	54	0	54	0	54	54	0	56	0	56	0	56	0	56	0	56	0	56
	Left-Through-Right		0							0				0				0	
	Left-Right		0							0				0				0	
WESTBOUND	Left	52	1	**52**	0	52	**52**	0	54	1	**54**	0	54	1	**54**	0	54	1	**54**
	Left-Through		0							0				0				0	
	Through	785	2	393	20	805	403	1	822	2	411	20	842	2	421	0	842	2	421
	Through-Right		0							0				0				0	
	Right	0	0	0	0	0	0	0	0	0	0	0	0	0	0	0	0	0	0
	Left-Through-Right		0							0				0				0	
	Left-Right		0							0				0				0	
CRITICAL VOLUMES		*North-South:*		122	*North-South:*		122	*North-South:*			128	*North-South:*			128	*North-South:*			128
		East-West:		496	*East-West:*		506	*East-West:*			518	*East-West:*			528	*East-West:*			528
		SUM:		618	*SUM:*		628	*SUM:*			646	*SUM:*			656	*SUM:*			656
VOLUME/CAPACITY *(V/C)* RATIO:				0.515			0.523				0.538				0.547				0.547
V/C LESS ATSAC/ATCS ADJUSTMENT:				0.515			0.523				0.538				0.547				0.547
LEVEL OF SERVICE (LOS):				A			A				A				A				A

REMARKS: Alt. Route 2: Using only Boulevard Pit

Version: 1i Beta; 8/4/2011

PROJECT IMPACT

Change in *v/c* due to project:	0.009	Δ*v/c* after mitigation:	0.009
Significant impacted?	NO	Fully mitigated?	N/A

Level of Service Workheet
(Circular 212 Method)

I/S #:	North-South Street:	Kewen Avenue	Year of Count:	2015	Ambient Growth: (%):	1.5	Conducted by:	City Traffic Counters	Date:	4/28/2015
CMA17	East-West Street:	Paxton Street	Projection Year:	2018	Peak Hour:	Mid-Day	Reviewed by:		Project:	Pacoima Reservoir Project/1-13-4

	Existing Condition			Existing Plus Project			Future Condition W/O Project			Future Condition W/ Project			Future W/ Project W/ Mitigation		
No. of Phases			0			0			0			0			0
Opposed Ø'ing: N/S-1, E/W-2 or Both-3?			0			0			0			0			0
Right Turns: FREE-1, NRTOR-2 or OLA-3?	NB-- 0	SB--	0	NB-- 0	SB--	0	NB-- 0	SB--	0	NB-- 0	SB--	0	NB-- 0	SB--	0
	EB-- 0	WB--	0	EB-- 0	WB--	0	EB-- 0	WB--	0	EB-- 0	WB--	0	EB-- 0	WB--	0
ATSAC-1 or ATSAC+ATCS-2?			0			0			0			0			0
Override Capacity			1200			#####			1200			1200			1200

	MOVEMENT	Existing Condition Volume	No. of Lanes	Lane Volume	Existing Plus Project Project Traffic	Total Volume	Lane Volume	Future Condition W/O Project Added Volume	Total Volume	No. of Lanes	Lane Volume	Future Condition W/ Project Added Volume	Total Volume	No. of Lanes	Lane Volume	Future W/ Project W/ Mitigation Added Volume	Total Volume	No. of Lanes	Lane Volume
NORTHBOUND	Left	8	0	8	0	8	8	0	8	0	8	0	8	0	8	0	8	0	8
	Left-Through		0							0				0				0	
	Through	0	0	0	0	0	0	0	0	0	0	0	0	0	0	0	0	0	0
	Through-Right		0							0				0				0	
	Right	26	0	**34**	0	26	**34**	0	27	0	**35**	0	27	0	**35**	0	27	0	**35**
	Left-Through-Right		0							0				0				0	
	Left-Right		1							1				1				1	
SOUTHBOUND	Left	0	0	**0**	0	0	**0**	0	0	0	**0**	0	0	0	**0**	0	0	0	**0**
	Left-Through		0							0				0				0	
	Through	0	0	0	0	0	0	0	0	0	0	0	0	0	0	0	0	0	0
	Through-Right		0							0				0				0	
	Right	0	0	0	0	0	0	0	0	0	0	0	0	0	0	0	0	0	0
	Left-Through-Right		0							0				0				0	
	Left-Right		0							0				0				0	
EASTBOUND	Left	0	0	0	0	0	0	0	0	0	0	0	0	0	0	0	0	0	0
	Left-Through		0							0				0				0	
	Through	523	1	**272**	20	543	**282**	1	548	1	**285**	20	568	1	**295**	0	568	1	**295**
	Through-Right		1							1				1				1	
	Right	20	0	20	0	20	20	0	21	0	21	0	21	0	21	0	21	0	21
	Left-Through-Right		0							0				0				0	
	Left-Right		0							0				0				0	
WESTBOUND	Left	25	1	**25**	0	25	**25**	0	26	1	**26**	0	26	1	**26**	0	26	1	**26**
	Left-Through		0							0				0				0	
	Through	522	2	261	20	542	271	1	547	2	274	20	567	2	284	0	567	2	284
	Through-Right		0							0				0				0	
	Right	0	0	0	0	0	0	0	0	0	0	0	0	0	0	0	0	0	0
	Left-Through-Right		0							0				0				0	
	Left-Right		0							0				0				0	
CRITICAL VOLUMES		North-South:		34	North-South:		34	North-South:			35	North-South:			35	North-South:			35
		East-West:		297	East-West:		307	East-West:			311	East-West:			321	East-West:			321
		SUM:		331	SUM:		341	SUM:			346	SUM:			356	SUM:			356
VOLUME/CAPACITY (V/C) RATIO:				0.276			0.284				0.288				0.297				0.297
V/C LESS ATSAC/ATCS ADJUSTMENT:				0.276			0.284				0.288				0.297				0.297
LEVEL OF SERVICE (LOS):				A			A				A				A				A

REMARKS: Alt. Route 2: Using only Boulevard Pit

Version: 1i Beta; 8/4/2011

PROJECT IMPACT

Change in *v/c* due to project:	0.009	Δ*v/c* after mitigation:	0.009
Significant impacted?	NO	Fully mitigated?	N/A

Level of Service Workheet
(Circular 212 Method)

I/S #:	North-South Street:	Kewen Avenue	Year of Count:	2015	Ambient Growth: (%):	1.5	Conducted by:	City Traffic Counters	Date:	4/28/2015
CMA17	East-West Street:	Paxton Street	Projection Year:	2018	Peak Hour:	PM	Reviewed by:		Project:	Pacoima Reservoir Project/1-13-4

	Existing Condition	Existing Plus Project	Future Condition W/O Project	Future Condition W/ Project	Future W/ Project W/ Mitigation
No. of Phases	0	0	0	0	0
Opposed Ø'ing: N/S-1, E/W-2 or Both-3?	0	0	0	0	0
Right Turns: FREE-1, NRTOR-2 or OLA-3?	NB-- 0 SB-- 0	NB-- 0 SB-- 0	NB-- 0 SB-- 0	NB-- 0 SB-- 0	NB-- 0 SB-- 0
	EB-- 0 WB-- 0	EB-- 0 WB-- 0	EB-- 0 WB-- 0	EB-- 0 WB-- 0	EB-- 0 WB-- 0
ATSAC-1 or ATSAC+ATCS-2?	0	0	0	0	0
Override Capacity	1200	#####	1200	1200	1200

	MOVEMENT	Existing Condition Volume	No. of Lanes	Lane Volume	Existing Plus Project Project Traffic	Total Volume	Lane Volume	Future Condition W/O Project Added Volume	Total Volume	No. of Lanes	Lane Volume	Future Condition W/ Project Added Volume	Total Volume	No. of Lanes	Lane Volume	Future W/ Project W/ Mitigation Added Volume	Total Volume	No. of Lanes	Lane Volume
NORTHBOUND	Left	18	0	18	0	18	18	0	19	0	19	0	19	0	19	0	19	0	19
	Left-Through		0							0				0				0	
	Through	0	0	0	0	0	0	0	0	0	0	0	0	0	0	0	0	0	0
	Through-Right		0							0				0				0	
	Right	56	0	**74**	0	56	**74**	0	59	0	**78**	0	59	0	**78**	0	59	0	**78**
	Left-Through-Right		0							0				0				0	
	Left-Right		1							1				1				1	
SOUTHBOUND	Left	0	0	**0**	0	0	**0**	0	0	0	**0**	0	0	0	**0**	0	0	0	**0**
	Left-Through		0							0				0				0	
	Through	0	0	0	0	0	0	0	0	0	0	0	0	0	0	0	0	0	0
	Through-Right		0							0				0				0	
	Right	0	0	0	0	0	0	0	0	0	0	0	0	0	0	0	0	0	0
	Left-Through-Right		0							0				0				0	
	Left-Right		0							0				0				0	
EASTBOUND	Left	0	0	0	0	0	0	0	0	0	0	0	0	0	0	0	0	0	0
	Left-Through		0							0				0				0	
	Through	1027	1	**531**	20	1047	**541**	1	1075	1	**556**	20	1095	1	**566**	0	1095	1	**566**
	Through-Right		1							1				1				1	
	Right	35	0	35	0	35	35	0	37	0	37	0	37	0	37	0	37	0	37
	Left-Through-Right		0							0				0				0	
	Left-Right		0							0				0				0	
WESTBOUND	Left	26	1	**26**	0	26	**26**	0	27	1	**27**	0	27	1	**27**	0	27	1	**27**
	Left-Through		0							0				0				0	
	Through	748	2	374	20	768	384	1	783	2	392	20	803	2	402	0	803	2	402
	Through-Right		0							0				0				0	
	Right	0	0	0	0	0	0	0	0	0	0	0	0	0	0	0	0	0	0
	Left-Through-Right		0							0				0				0	
	Left-Right		0							0				0				0	
CRITICAL VOLUMES		North-South:		74	North-South:		74	North-South:			78	North-South:			78	North-South:			78
		East-West:		557	East-West:		567	East-West:			583	East-West:			593	East-West:			593
		SUM:		631	SUM:		641	SUM:			661	SUM:			671	SUM:			671
VOLUME/CAPACITY (V/C) RATIO:				0.526			0.534				0.551				0.559				0.559
V/C LESS ATSAC/ATCS ADJUSTMENT:				0.526			0.534				0.551				0.559				0.559
LEVEL OF SERVICE (LOS):				A			A				A				A				A

REMARKS: Alt. Route 2: Using only Boulevard Pit

Version: 1i Beta; 8/4/2011

PROJECT IMPACT

Change in *v/c* due to project:	0.008	Δ*v/c* after mitigation:	0.008
Significant impacted?	NO	Fully mitigated?	N/A

Level of Service Workheet
(Circular 212 Method)

I/S #:	North-South Street:	Telfair Avenue	Year of Count:	2015	Ambient Growth: (%):	1.5	Conducted by:	City Traffic Counters	Date:	4/28/2015
CMA18	East-West Street:	Paxton Street	Projection Year:	2018	Peak Hour:	AM	Reviewed by:		Project:	Pacoima Reservoir Project/1-13-4

No. of Phases				2				2				2				2				2			
Opposed Ø'ing: N/S-1, E/W-2 or Both-3?				0				0				0				0				0			
Right Turns: FREE-1, NRTOR-2 or OLA-3?	NB--	0	SB--	0	NB--	0	SB--	0	NB--	0	SB--	0	NB--	0	SB--	0	NB--	0	SB--	0			
	EB--	0	WB--	0	EB--	0	WB--	0	EB--	0	WB--	0	EB--	0	WB--	0	EB--	0	WB--	0			
ATSAC-1 or ATSAC+ATCS-2?				2				2				2				2				2			
Override Capacity				0				0				0				0				0			

MOVEMENT		EXISTING CONDITION			EXISTING PLUS PROJECT			FUTURE CONDITION W/O PROJECT				FUTURE CONDITION W/ PROJECT				FUTURE W/ PROJECT W/ MITIGATION			
		Volume	No. of Lanes	Lane Volume	Project Traffic	Total Volume	Lane Volume	Added Volume	Total Volume	No. of Lanes	Lane Volume	Added Volume	Total Volume	No. of Lanes	Lane Volume	Added Volume	Total Volume	No. of Lanes	Lane Volume
NORTHBOUND	Left	57	0	**57**	0	57	**57**	0	60	0	**60**	0	60	0	**60**	0	60	0	**60**
	Left-Through		0							0				0				0	
	Through	57	0	158	0	57	158	0	60	0	166	0	60	0	166	0	60	0	166
	Through-Right		0							0				0				0	
	Right	44	0	0	0	44	0	0	46	0	0	0	46	0	0	0	46	0	0
	Left-Through-Right		1							1				1				1	
	Left-Right		0							0				0				0	
SOUTHBOUND	Left	51	0	51	0	51	51	0	53	0	53	0	53	0	53	0	53	0	53
	Left-Through		0							0				0				0	
	Through	38	0	**185**	0	38	**185**	0	40	0	**193**	0	40	0	**193**	0	40	0	**193**
	Through-Right		0							0				0				0	
	Right	96	0	0	0	96	0	0	100	0	0	0	100	0	0	0	100	0	0
	Left-Through-Right		1							1				1				1	
	Left-Right		0							0				0				0	
EASTBOUND	Left	98	1	98	0	98	98	0	102	1	102	0	102	1	102	0	102	1	102
	Left-Through		0							0				0				0	
	Through	752	1	**419**	20	772	**429**	1	787	1	**439**	20	807	1	**449**	0	807	1	**449**
	Through-Right		1							1				1				1	
	Right	86	0	86	0	86	86	0	90	0	90	0	90	0	90	0	90	0	90
	Left-Through-Right		0							0				0				0	
	Left-Right		0							0				0				0	
WESTBOUND	Left	68	1	**68**	0	68	**68**	0	71	1	**71**	0	71	1	**71**	0	71	1	**71**
	Left-Through		0							0				0				0	
	Through	659	1	346	20	679	356	1	690	1	362	20	710	1	372	0	710	1	372
	Through-Right		1							1				1				1	
	Right	32	0	32	0	32	32	0	33	0	33	0	33	0	33	0	33	0	33
	Left-Through-Right		0							0				0				0	
	Left-Right		0							0				0				0	
CRITICAL VOLUMES		*North-South:*		242	*North-South:*		242	*North-South:*			253	*North-South:*			253	*North-South:*			253
		East-West:		487	*East-West:*		497	*East-West:*			510	*East-West:*			520	*East-West:*			520
		SUM:		729	*SUM:*		739	*SUM:*			763	*SUM:*			773	*SUM:*			773
VOLUME/CAPACITY *(V/C)* RATIO:				0.486			0.493				0.509				0.515				0.515
V/C LESS ATSAC/ATCS ADJUSTMENT:				**0.386**			**0.393**				**0.409**				**0.415**				**0.415**
LEVEL OF SERVICE (LOS):				**A**			**A**				**A**				**A**				**A**

REMARKS: Alt. Route 2: Using only Boulevard Pit

Version: 1i Beta; 8/4/2011

PROJECT IMPACT

Change in *v/c* due to project:	0.006	Δ*v/c* after mitigation:	0.006
Significant impacted?	NO	Fully mitigated?	N/A

Level of Service Workheet
(Circular 212 Method)

I/S #:	North-South Street:	Telfair Avenue	Year of Count:	2015	Ambient Growth: (%):	1.5	Conducted by:	City Traffic Counters	Date:	4/28/2015
CMA18	East-West Street:	Paxton Street	Projection Year:	2018	Peak Hour:	Mid-Day	Reviewed by:		Project:	Pacoima Reservoir Project/1-13-4

	Existing Condition	Existing Plus Project	Future Condition W/O Project	Future Condition W/ Project	Future W/ Project W/ Mitigation
No. of Phases	2	2	2	2	2
Opposed Ø'ing: N/S-1, E/W-2 or Both-3?	0	0	0	0	0
Right Turns: FREE-1, NRTOR-2 or OLA-3?	NB-- 0 SB-- 0 EB-- 0 WB-- 0	NB-- 0 SB-- 0 EB-- 0 WB-- 0	NB-- 0 SB-- 0 EB-- 0 WB-- 0	NB-- 0 SB-- 0 EB-- 0 WB-- 0	NB-- 0 SB-- 0 EB-- 0 WB-- 0
ATSAC-1 or ATSAC+ATCS-2?	2	2	2	2	2
Override Capacity	0	0	0	0	0

	MOVEMENT	Existing Condition Volume	No. of Lanes	Lane Volume	Existing Plus Project Project Traffic	Total Volume	Lane Volume	Future Condition W/O Project Added Volume	Total Volume	No. of Lanes	Lane Volume	Future Condition W/ Project Added Volume	Total Volume	No. of Lanes	Lane Volume	Future W/ Project W/ Mitigation Added Volume	Total Volume	No. of Lanes	Lane Volume
NORTHBOUND	Left	25	0	**25**	0	25	**25**	0	26	0	**26**	0	26	0	**26**	0	26	0	**26**
	Left-Through		0							0				0				0	
	Through	13	0	75	0	13	75	0	14	0	79	0	14	0	79	0	14	0	79
	Through-Right		0							0				0				0	
	Right	37	0	0	0	37	0	0	39	0	0	0	39	0	0	0	39	0	0
	Left-Through-Right		1							1				1				1	
	Left-Right		0							0				0				0	
SOUTHBOUND	Left	16	0	16	0	16	16	0	17	0	17	0	17	0	17	0	17	0	17
	Left-Through		0							0				0				0	
	Through	13	0	**78**	0	13	**78**	0	14	0	**82**	0	14	0	**82**	0	14	0	**82**
	Through-Right		0							0				0				0	
	Right	49	0	0	0	49	0	0	51	0	0	0	51	0	0	0	51	0	0
	Left-Through-Right		1							1				1				1	
	Left-Right		0							0				0				0	
EASTBOUND	Left	67	1	**67**	0	67	**67**	0	70	1	**70**	0	70	1	**70**	0	70	1	**70**
	Left-Through		0							0				0				0	
	Through	456	1	239	20	476	249	1	478	1	251	20	498	1	261	0	498	1	261
	Through-Right		1							1				1				1	
	Right	22	0	22	0	22	22	0	23	0	23	0	23	0	23	0	23	0	23
	Left-Through-Right		0							0				0				0	
	Left-Right		0							0				0				0	
WESTBOUND	Left	26	1	26	0	26	26	0	27	1	27	0	27	1	27	0	27	1	27
	Left-Through		0							0				0				0	
	Through	470	1	**247**	20	490	**257**	1	492	1	**258**	20	512	1	**268**	0	512	1	**268**
	Through-Right		1							1				1				1	
	Right	23	0	23	0	23	23	0	24	0	24	0	24	0	24	0	24	0	24
	Left-Through-Right		0							0				0				0	
	Left-Right		0							0				0				0	
CRITICAL VOLUMES		*North-South:*		103	*North-South:*		103	*North-South:*			108	*North-South:*			108	*North-South:*			108
		East-West:		314	*East-West:*		324	*East-West:*			328	*East-West:*			338	*East-West:*			338
		SUM:		417	*SUM:*		427	*SUM:*			436	*SUM:*			446	*SUM:*			446
VOLUME/CAPACITY *(V/C)* RATIO:				0.278			0.285				0.291				0.297				0.297
V/C LESS ATSAC/ATCS ADJUSTMENT:				**0.178**			**0.185**				**0.191**				**0.197**				**0.197**
LEVEL OF SERVICE (LOS):				**A**			**A**				**A**				**A**				**A**

REMARKS: Alt. Route 2: Using only Boulevard Pit

Version: 1i Beta; 8/4/2011

PROJECT IMPACT

Change in *v/c* due to project:	0.006	Δ*v/c* after mitigation:	0.006
Significant impacted?	NO	Fully mitigated?	N/A

Level of Service Workheet
(Circular 212 Method)

I/S #:	North-South Street:	Telfair Avenue	Year of Count:	2015	Ambient Growth: (%):	1.5	Conducted by:	City Traffic Counters	Date:	4/28/2015
CMA18	East-West Street:	Paxton Street	Projection Year:	2018	Peak Hour:	PM	Reviewed by:		Project:	Pacoima Reservoir Project/1-13-4

No. of Phases				2				2				2				2				2			
Opposed Ø'ing: N/S-1, E/W-2 or Both-3?				0				0				0				0				0			
Right Turns: FREE-1, NRTOR-2 or OLA-3?	NB--	0	SB--	0	NB--	0	SB--	0	NB--	0	SB--	0	NB--	0	SB--	0	NB--	0	SB--	0			
	EB--	0	WB--	0	EB--	0	WB--	0	EB--	0	WB--	0	EB--	0	WB--	0	EB--	0	WB--	0			
ATSAC-1 or ATSAC+ATCS-2?				2				2				2				2				2			
Override Capacity				0				0				0				0				0			

MOVEMENT		EXISTING CONDITION			EXISTING PLUS PROJECT			FUTURE CONDITION W/O PROJECT				FUTURE CONDITION W/ PROJECT				FUTURE W/ PROJECT W/ MITIGATION			
		Volume	No. of Lanes	Lane Volume	Project Traffic	Total Volume	Lane Volume	Added Volume	Total Volume	No. of Lanes	Lane Volume	Added Volume	Total Volume	No. of Lanes	Lane Volume	Added Volume	Total Volume	No. of Lanes	Lane Volume
NORTHBOUND	Left	39	0	**39**	0	39	**39**	0	41	0	**41**	0	41	0	**41**	0	41	0	**41**
	Left-Through		0							0				0				0	
	Through	48	0	130	0	48	130	0	50	0	136	0	50	0	136	0	50	0	136
	Through-Right		0							0				0				0	
	Right	43	0	0	0	43	0	0	45	0	0	0	45	0	0	0	45	0	0
	Left-Through-Right		1							1				1				1	
	Left-Right		0							0				0				0	
SOUTHBOUND	Left	29	0	29	0	29	29	0	30	0	30	0	30	0	30	0	30	0	30
	Left-Through		0							0				0				0	
	Through	29	0	**122**	0	29	**122**	0	30	0	**127**	0	30	0	**127**	0	30	0	**127**
	Through-Right		0							0				0				0	
	Right	64	0	0	0	64	0	0	67	0	0	0	67	0	0	0	67	0	0
	Left-Through-Right		1							1				1				1	
	Left-Right		0							0				0				0	
EASTBOUND	Left	109	1	109	0	109	109	0	114	1	114	0	114	1	114	0	114	1	114
	Left-Through		0							0				0				0	
	Through	924	1	**486**	20	944	**496**	1	967	1	**509**	20	987	1	**519**	0	987	1	**519**
	Through-Right		1							1				1				1	
	Right	48	0	48	0	48	48	0	50	0	50	0	50	0	50	0	50	0	50
	Left-Through-Right		0							0				0				0	
	Left-Right		0							0				0				0	
WESTBOUND	Left	51	1	**51**	0	51	**51**	0	53	1	**53**	0	53	1	**53**	0	53	1	**53**
	Left-Through		0							0				0				0	
	Through	662	1	351	20	682	361	1	693	1	368	20	713	1	378	0	713	1	378
	Through-Right		1							1				1				1	
	Right	40	0	40	0	40	40	0	42	0	42	0	42	0	42	0	42	0	42
	Left-Through-Right		0							0				0				0	
	Left-Right		0							0				0				0	
CRITICAL VOLUMES		*North-South:*		161	*North-South:*		161	*North-South:*			168	*North-South:*			168	*North-South:*			168
		East-West:		537	*East-West:*		547	*East-West:*			562	*East-West:*			572	*East-West:*			572
		SUM:		698	*SUM:*		708	*SUM:*			730	*SUM:*			740	*SUM:*			740
VOLUME/CAPACITY *(V/C)* RATIO:				0.465			0.472				0.487				0.493				0.493
V/C LESS ATSAC/ATCS ADJUSTMENT:				**0.365**			**0.372**				**0.387**				**0.393**				**0.393**
LEVEL OF SERVICE (LOS):				**A**			**A**				**A**				**A**				**A**

REMARKS: Alt. Route 2: Using only Boulevard Pit

Version: 1i Beta; 8/4/2011

PROJECT IMPACT

Change in *v/c* due to project:	0.006	Δ*v/c* after mitigation:	0.006
Significant impacted?	NO	Fully mitigated?	N/A

Level of Service Workheet
(Circular 212 Method)

I/S #:	North-South Street:	San Fernando Road	Year of Count:	2015	Ambient Growth: (%):	1.5	Conducted by:	City Traffic Counters	Date:	4/28/2015
CMA19	East-West Street:	Paxton Street	Projection Year:	2018	Peak Hour:	AM	Reviewed by:		Project:	Pacoima Reservoir Project/1-13-4

No. of Phases				4				4				4				4				4			
Opposed Ø'ing: N/S-1, E/W-2 or Both-3?				2				2				2				2				2			
Right Turns: FREE-1, NRTOR-2 or OLA-3?	NB--	0	SB--	3	NB--	0	SB--	3	NB--	0	SB--	3	NB--	0	SB--	3	NB--	0	SB--	3	NB--	0	SB--	3
	EB--	3	WB--	2	EB--	3	WB--	2	EB--	3	WB--	2	EB--	3	WB--	2	EB--	3	WB--	2	EB--	3	WB--	2
ATSAC-1 or ATSAC+ATCS-2?				2				2				2				2				2				2
Override Capacity				0				0				0				0				0				0

	MOVEMENT	EXISTING CONDITION			EXISTING PLUS PROJECT			FUTURE CONDITION W/O PROJECT				FUTURE CONDITION W/ PROJECT				FUTURE W/ PROJECT W/ MITIGATION			
		Volume	No. of Lanes	Lane Volume	Project Traffic	Total Volume	Lane Volume	Added Volume	Total Volume	No. of Lanes	Lane Volume	Added Volume	Total Volume	No. of Lanes	Lane Volume	Added Volume	Total Volume	No. of Lanes	Lane Volume
NORTHBOUND	Left	33	1	33	20	53	53	0	35	1	35	20	55	1	55	0	55	1	55
	Left-Through		0							0				0				0	
	Through	696	2	**348**	0	696	**348**	12	740	2	**370**	0	740	2	**370**	0	740	2	**370**
	Through-Right		0							0				0				0	
	Right	383	1	304	0	383	304	0	400	1	318	0	400	1	318	0	400	1	318
	Left-Through-Right		0							0				0				0	
	Left-Right		0							0				0				0	
SOUTHBOUND	Left	153	1	**153**	0	153	**153**	0	160	1	**160**	0	160	1	**160**	0	160	1	**160**
	Left-Through		0							0				0				0	
	Through	749	2	375	0	749	375	20	803	2	402	0	803	2	402	0	803	2	402
	Through-Right		0							0				0				0	
	Right	278	1	180	0	278	180	0	291	1	189	0	291	1	189	0	291	1	189
	Left-Through-Right		0							0				0				0	
	Left-Right		0							0				0				0	
EASTBOUND	Left	98	1	98	0	98	98	0	102	1	102	0	102	1	102	0	102	1	102
	Left-Through		0							0				0				0	
	Through	741	2	**371**	0	741	**371**	1	776	2	**388**	0	776	2	**388**	0	776	2	**388**
	Through-Right		0							0				0				0	
	Right	44	1	11	20	64	11	0	46	1	11	20	66	1	11	0	66	1	11
	Left-Through-Right		0							0				0				0	
	Left-Right		0							0				0				0	
WESTBOUND	Left	158	1	158	0	158	158	0	165	1	165	0	165	1	165	0	165	1	165
	Left-Through		0							0				0				0	
	Through	533	1	**422**	0	533	**422**	1	558	1	**441**	0	558	1	**441**	0	558	1	**441**
	Through-Right		1							1				1				1	
	Right	310	0	310	0	310	310	0	324	0	324	0	324	0	324	0	324	0	324
	Left-Through-Right		0							0				0				0	
	Left-Right		0							0				0				0	
CRITICAL VOLUMES		*North-South:*		501	*North-South:*		501	*North-South:*			530	*North-South:*			530	*North-South:*			530
		East-West:		793	*East-West:*		793	*East-West:*			829	*East-West:*			829	*East-West:*			829
		SUM:		1294	*SUM:*		1294	*SUM:*			1359	*SUM:*			1359	*SUM:*			1359
VOLUME/CAPACITY *(V/C)* RATIO:				0.941			0.941				0.988				0.988				0.988
V/C LESS ATSAC/ATCS ADJUSTMENT:				**0.841**			**0.841**				**0.888**				**0.888**				**0.888**
LEVEL OF SERVICE (LOS):				**D**			**D**				**D**				**D**				**D**

REMARKS: Alt. Route 2: Using only Boulevard Pit

Version: 1i Beta; 8/4/2011

PROJECT IMPACT

Change in *v/c* due to project:	0.000	Δ*v/c* after mitigation:	0.000
Significant impacted?	NO	Fully mitigated?	N/A

Level of Service Workheet
(Circular 212 Method)

I/S #:	North-South Street:	San Fernando Road	Year of Count:	2015	Ambient Growth: (%):	1.5	Conducted by:	City Traffic Counters	Date:	4/28/2015
CMA19	East-West Street:	Paxton Street	Projection Year:	2018	Peak Hour:	Mid-Day	Reviewed by:		Project:	Pacoima Reservoir Project/1-13-4

No. of Phases			4			4			4			4			4			4
Opposed Ø'ing: N/S-1, E/W-2 or Both-3?			2			2			2			2			2			2
Right Turns: FREE-1, NRTOR-2 or OLA-3?	NB-- 0	SB--	3	NB-- 0	SB--	3	NB-- 0	SB--	3	NB-- 0	SB--	3	NB-- 0	SB--	3	NB-- 0	SB--	3
	EB-- 3	WB--	2	EB-- 3	WB--	2	EB-- 3	WB--	2	EB-- 3	WB--	2	EB-- 3	WB--	2	EB-- 3	WB--	2
ATSAC-1 or ATSAC+ATCS-2?			2			2			2			2			2			2
Override Capacity			0			0			0			0			0			0

	MOVEMENT	EXISTING CONDITION			EXISTING PLUS PROJECT			FUTURE CONDITION W/O PROJECT				FUTURE CONDITION W/ PROJECT				FUTURE W/ PROJECT W/ MITIGATION			
		Volume	No. of Lanes	Lane Volume	Project Traffic	Total Volume	Lane Volume	Added Volume	Total Volume	No. of Lanes	Lane Volume	Added Volume	Total Volume	No. of Lanes	Lane Volume	Added Volume	Total Volume	No. of Lanes	Lane Volume
NORTHBOUND	Left	50	1	50	20	70	70	0	52	1	52	20	72	1	72	0	72	1	72
	Left-Through		0							0				0				0	
	Through	759	2	**380**	0	759	**380**	9	803	2	**402**	0	803	2	**402**	0	803	2	**402**
	Through-Right		0							0				0				0	
	Right	286	1	205	0	286	205	0	299	1	215	0	299	1	215	0	299	1	215
	Left-Through-Right		0							0				0				0	
	Left-Right		0							0				0				0	
SOUTHBOUND	Left	169	1	**169**	0	169	**169**	0	177	1	**177**	0	177	1	**177**	0	177	1	**177**
	Left-Through		0							0				0				0	
	Through	553	2	277	0	553	277	7	585	2	293	0	585	2	293	0	585	2	293
	Through-Right		0							0				0				0	
	Right	178	1	77	0	178	77	0	186	1	80	0	186	1	80	0	186	1	80
	Left-Through-Right		0							0				0				0	
	Left-Right		0							0				0				0	
EASTBOUND	Left	101	1	101	0	101	101	0	106	1	106	0	106	1	106	0	106	1	106
	Left-Through		0							0				0				0	
	Through	326	2	**163**	0	326	**163**	1	342	2	**171**	0	342	2	**171**	0	342	2	**171**
	Through-Right		0							0				0				0	
	Right	152	1	102	20	172	102	0	159	1	107	20	179	1	107	0	179	1	107
	Left-Through-Right		0							0				0				0	
	Left-Right		0							0				0				0	
WESTBOUND	Left	162	1	162	0	162	162	0	169	1	169	0	169	1	169	0	169	1	169
	Left-Through		0							0				0				0	
	Through	386	1	**371**	0	386	**371**	1	405	1	**389**	0	405	1	**389**	0	405	1	**389**
	Through-Right		1							1				1				1	
	Right	356	0	356	0	356	356	0	372	0	372	0	372	0	372	0	372	0	372
	Left-Through-Right		0							0				0				0	
	Left-Right		0							0				0				0	
CRITICAL VOLUMES		*North-South:*		549	*North-South:*		549	*North-South:*			579	*North-South:*			579	*North-South:*			579
		East-West:		534	*East-West:*		534	*East-West:*			560	*East-West:*			560	*East-West:*			560
		SUM:		1083	*SUM:*		1083	*SUM:*			1139	*SUM:*			1139	*SUM:*			1139
VOLUME/CAPACITY *(V/C)* RATIO:				0.788			0.788				0.828				0.828				0.828
V/C LESS ATSAC/ATCS ADJUSTMENT:				**0.688**			**0.688**				**0.728**				**0.728**				**0.728**
LEVEL OF SERVICE (LOS):				**B**			**B**				**C**				**C**				**C**

REMARKS: Alt. Route 2: Using only Boulevard Pit

Version: 1i Beta; 8/4/2011

PROJECT IMPACT

Change in *v/c* due to project:	0.000	Δ*v/c* after mitigation:	0.000
Significant impacted?	NO	Fully mitigated?	N/A

Level of Service Workheet
(Circular 212 Method)

I/S #:	North-South Street:	San Fernando Road	Year of Count:	2015	Ambient Growth: (%):	1.5	Conducted by:	City Traffic Counters	Date:	4/28/2015
CMA19	East-West Street:	Paxton Street	Projection Year:	2018	Peak Hour:	PM	Reviewed by:		Project:	Pacoima Reservoir Project/1-13-4

No. of Phases				4				4				4				4				4		
Opposed Ø'ing: N/S-1, E/W-2 or Both-3?				2				2				2				2				2		
Right Turns: FREE-1, NRTOR-2 or OLA-3?	NB--	0	SB--	3	NB--	0	SB--	3	NB--	0	SB--	3	NB--	0	SB--	3	NB--	0	SB--	3		
	EB--	3	WB--	2	EB--	3	WB--	2	EB--	3	WB--	2	EB--	3	WB--	2	EB--	3	WB--	2		
ATSAC-1 or ATSAC+ATCS-2?				2				2				2				2				2		
Override Capacity				0				0				0				0				0		

	MOVEMENT	EXISTING CONDITION			EXISTING PLUS PROJECT			FUTURE CONDITION W/O PROJECT				FUTURE CONDITION W/ PROJECT				FUTURE W/ PROJECT W/ MITIGATION			
		Volume	No. of Lanes	Lane Volume	Project Traffic	Total Volume	Lane Volume	Added Volume	Total Volume	No. of Lanes	Lane Volume	Added Volume	Total Volume	No. of Lanes	Lane Volume	Added Volume	Total Volume	No. of Lanes	Lane Volume
NORTHBOUND	Left	45	1	45	20	65	65	0	47	1	47	20	67	1	67	0	67	1	67
	Left-Through		0							0				0				0	
	Through	715	2	**358**	0	715	**358**	14	762	2	**381**	0	762	2	**381**	0	762	2	**381**
	Through-Right		0							0				0				0	
	Right	293	1	214	0	293	214	0	306	1	223	0	306	1	223	0	306	1	223
	Left-Through-Right		0							0				0				0	
	Left-Right		0							0				0				0	
SOUTHBOUND	Left	139	1	**139**	0	139	**139**	0	145	1	**145**	0	145	1	**145**	0	145	1	**145**
	Left-Through		0							0				0				0	
	Through	727	2	364	0	727	364	10	770	2	385	0	770	2	385	0	770	2	385
	Through-Right		0							0				0				0	
	Right	169	1	48	0	169	48	0	177	1	50	0	177	1	50	0	177	1	50
	Left-Through-Right		0							0				0				0	
	Left-Right		0							0				0				0	
EASTBOUND	Left	121	1	121	0	121	121	0	127	1	127	0	127	1	127	0	127	1	127
	Left-Through		0							0				0				0	
	Through	642	2	**321**	0	642	**321**	1	672	2	**336**	0	672	2	**336**	0	672	2	**336**
	Through-Right		0							0				0				0	
	Right	191	1	146	20	211	146	0	200	1	153	20	220	1	153	0	220	1	153
	Left-Through-Right		0							0				0				0	
	Left-Right		0							0				0				0	
WESTBOUND	Left	159	1	159	0	159	159	0	166	1	166	0	166	1	166	0	166	1	166
	Left-Through		0							0				0				0	
	Through	556	1	**442**	0	556	**442**	1	582	1	**463**	0	582	1	**463**	0	582	1	**463**
	Through-Right		1							1				1				1	
	Right	328	0	328	0	328	328	0	343	0	343	0	343	0	343	0	343	0	343
	Left-Through-Right		0							0				0				0	
	Left-Right		0							0				0				0	
CRITICAL VOLUMES		*North-South:*		497	*North-South:*		497	*North-South:*			526	*North-South:*			526	*North-South:*			526
		East-West:		763	*East-West:*		763	*East-West:*			799	*East-West:*			799	*East-West:*			799
		SUM:		1260	*SUM:*		1260	*SUM:*			1325	*SUM:*			1325	*SUM:*			1325
VOLUME/CAPACITY *(V/C)* RATIO:				0.916			0.916				0.964				0.964				0.964
V/C LESS ATSAC/ATCS ADJUSTMENT:				**0.816**			**0.816**				**0.864**				**0.864**				**0.864**
LEVEL OF SERVICE (LOS):				**D**			**D**				**D**				**D**				**D**

REMARKS: Alt. Route 2: Using only Boulevard Pit

Version: 1i Beta; 8/4/2011

PROJECT IMPACT

Change in *v/c* due to project:	0.000	Δ*v/c* after mitigation:	0.000
Significant impacted?	NO	Fully mitigated?	N/A

Level of Service Workheet
(Circular 212 Method)

I/S #:	North-South Street:	San Fernando Road	Year of Count:	2015	Ambient Growth: (%):	1.5	Conducted by:	City Traffic Counters	Date:	4/28/2015
CMA20	East-West Street:	SR-118 Freeway EB Ramps	Projection Year:	2018	Peak Hour:	AM	Reviewed by:		Project:	Pacoima Reservoir Project/1-13-4

No. of Phases				2				2				2				2				2			
Opposed Ø'ing: N/S-1, E/W-2 or Both-3?				0				0				0				0				0			
Right Turns: FREE-1, NRTOR-2 or OLA-3?	NB--	0	SB--	3	NB--	0	SB--	3	NB--	0	SB--	3	NB--	0	SB--	3	NB--	0	SB--	3	NB--	0	SB--	3
	EB--	0	WB--	0	EB--	0	WB--	0	EB--	0	WB--	0	EB--	0	WB--	0	EB--	0	WB--	0	EB--	0	WB--	0
ATSAC-1 or ATSAC+ATCS-2?				2				2				2				2				2				2
Override Capacity				0				0				0				0				0				0

	MOVEMENT	EXISTING CONDITION			EXISTING PLUS PROJECT			FUTURE CONDITION W/O PROJECT				FUTURE CONDITION W/ PROJECT				FUTURE W/ PROJECT W/ MITIGATION			
		Volume	No. of Lanes	Lane Volume	Project Traffic	Total Volume	Lane Volume	Added Volume	Total Volume	No. of Lanes	Lane Volume	Added Volume	Total Volume	No. of Lanes	Lane Volume	Added Volume	Total Volume	No. of Lanes	Lane Volume
NORTHBOUND	Left	92	1	**92**	0	92	**92**	0	96	1	**96**	0	96	1	**96**	0	96	1	**96**
	Left-Through		0							0				0				0	
	Through	621	2	311	20	641	321	12	661	2	331	20	681	2	341	0	681	2	341
	Through-Right		0							0				0				0	
	Right	0	0	0	0	0	0	0	0	0	0	0	0	0	0	0	0	0	0
	Left-Through-Right		0							0				0				0	
	Left-Right		0							0				0				0	
SOUTHBOUND	Left	0	0	0	0	0	0	0	0	0	0	0	0	0	0	0	0	0	0
	Left-Through		0							0				0				0	
	Through	789	2	**395**	20	809	**405**	20	845	2	**423**	20	865	2	**433**	0	865	2	**433**
	Through-Right		0							0				0				0	
	Right	218	1	0	0	218	0	0	228	1	0	0	228	1	0	0	228	1	0
	Left-Through-Right		0							0				0				0	
	Left-Right		0							0				0				0	
EASTBOUND	Left	517	1	477	0	517	477	0	541	1	499	0	541	1	499	0	541	1	499
	Left-Through		0							0				0				0	
	Through	0	0	0	0	0	0	0	0	0	0	0	0	0	0	0	0	0	0
	Through-Right		0							0				0				0	
	Right	436	0	**477**	0	436	**477**	0	456	0	**499**	0	456	0	**499**	0	456	0	**499**
	Left-Through-Right		0							0				0				0	
	Left-Right		1							1				1				1	
WESTBOUND	Left	0	0	**0**	0	0	**0**	0	0	0	**0**	0	0	0	**0**	0	0	0	**0**
	Left-Through		0							0				0				0	
	Through	0	0	0	0	0	0	0	0	0	0	0	0	0	0	0	0	0	0
	Through-Right		0							0				0				0	
	Right	0	0	0	0	0	0	0	0	0	0	0	0	0	0	0	0	0	0
	Left-Through-Right		0							0				0				0	
	Left-Right		0							0				0				0	
CRITICAL VOLUMES		North-South:		487	North-South:		497	North-South:			519	North-South:			529	North-South:			529
		East-West:		477	East-West:		477	East-West:			499	East-West:			499	East-West:			499
		SUM:		964	SUM:		974	SUM:			1018	SUM:			1028	SUM:			1028
VOLUME/CAPACITY (V/C) RATIO:				0.643			0.649				0.679				0.685				0.685
V/C LESS ATSAC/ATCS ADJUSTMENT:				**0.543**			**0.549**				**0.579**				**0.585**				**0.585**
LEVEL OF SERVICE (LOS):				**A**			**A**				**A**				**A**				**A**

REMARKS: Alt. Route 2: Using only Boulevard Pit

Version: 1i Beta; 8/4/2011

PROJECT IMPACT

Change in *v/c* due to project:	0.006	Δ*v/c* after mitigation:	0.006
Significant impacted?	NO	Fully mitigated?	N/A

Level of Service Workheet
(Circular 212 Method)

I/S #:	North-South Street:	San Fernando Road	Year of Count:	2015	Ambient Growth: (%):	1.5	Conducted by:	City Traffic Counters	Date:	4/28/2015
CMA20	East-West Street:	SR-118 Freeway EB Ramps	Projection Year:	2018	Peak Hour:	Mid-Day	Reviewed by:		Project:	Pacoima Reservoir Project/1-13-4

No. of Phases				2				2				2				2				2		
Opposed Ø'ing: N/S-1, E/W-2 or Both-3?				0				0				0				0				0		
Right Turns: FREE-1, NRTOR-2 or OLA-3?	NB--	0	SB--	3	NB--	0	SB--	3	NB--	0	SB--	3	NB--	0	SB--	3	NB--	0	SB--	3		
	EB--	0	WB--	0	EB--	0	WB--	0	EB--	0	WB--	0	EB--	0	WB--	0	EB--	0	WB--	0		
ATSAC-1 or ATSAC+ATCS-2?				2				2				2				2				2		
Override Capacity				0				0				0				0				0		

	MOVEMENT	EXISTING CONDITION			EXISTING PLUS PROJECT			FUTURE CONDITION W/O PROJECT				FUTURE CONDITION W/ PROJECT				FUTURE W/ PROJECT W/ MITIGATION			
		Volume	No. of Lanes	Lane Volume	Project Traffic	Total Volume	Lane Volume	Added Volume	Total Volume	No. of Lanes	Lane Volume	Added Volume	Total Volume	No. of Lanes	Lane Volume	Added Volume	Total Volume	No. of Lanes	Lane Volume
NORTHBOUND	Left	68	1	**68**	0	68	**68**	0	71	1	**71**	0	71	1	**71**	0	71	1	**71**
	Left-Through		0							0				0				0	
	Through	625	2	313	20	645	323	9	663	2	332	20	683	2	342	0	683	2	342
	Through-Right		0							0				0				0	
	Right	0	0	0	0	0	0	0	0	0	0	0	0	0	0	0	0	0	0
	Left-Through-Right		0							0				0				0	
	Left-Right		0							0				0				0	
SOUTHBOUND	Left	0	0	0	0	0	0	0	0	0	0	0	0	0	0	0	0	0	0
	Left-Through		0							0				0				0	
	Through	644	2	**322**	20	664	**332**	7	680	2	**340**	20	700	2	**350**	0	700	2	**350**
	Through-Right		0							0				0				0	
	Right	176	1	0	0	176	0	0	184	1	0	0	184	1	0	0	184	1	0
	Left-Through-Right		0							0				0				0	
	Left-Right		0							0				0				0	
EASTBOUND	Left	525	1	343	0	525	343	0	549	1	359	0	549	1	359	0	549	1	359
	Left-Through		0							0				0				0	
	Through	0	0	0	0	0	0	0	0	0	0	0	0	0	0	0	0	0	0
	Through-Right		0							0				0				0	
	Right	161	0	**343**	0	161	**343**	0	168	0	**359**	0	168	0	**359**	0	168	0	**359**
	Left-Through-Right		0							0				0				0	
	Left-Right		1							1				1				1	
WESTBOUND	Left	0	0	**0**	0	0	**0**	0	0	0	**0**	0	0	0	**0**	0	0	0	**0**
	Left-Through		0							0				0				0	
	Through	0	0	0	0	0	0	0	0	0	0	0	0	0	0	0	0	0	0
	Through-Right		0							0				0				0	
	Right	0	0	0	0	0	0	0	0	0	0	0	0	0	0	0	0	0	0
	Left-Through-Right		0							0				0				0	
	Left-Right		0							0				0				0	
CRITICAL VOLUMES		*North-South:*		390	*North-South:*		400	*North-South:*			411	*North-South:*			421	*North-South:*			421
		East-West:		343	*East-West:*		343	*East-West:*			359	*East-West:*			359	*East-West:*			359
		SUM:		733	*SUM:*		743	*SUM:*			770	*SUM:*			780	*SUM:*			780
VOLUME/CAPACITY *(V/C)* RATIO:				0.489			0.495				0.513				0.520				0.520
V/C LESS ATSAC/ATCS ADJUSTMENT:				**0.389**			**0.395**				**0.413**				**0.420**				**0.420**
LEVEL OF SERVICE (LOS):				**A**			**A**				**A**				**A**				**A**

REMARKS: Alt. Route 2: Using only Boulevard Pit

Version: 1i Beta; 8/4/2011

PROJECT IMPACT

Change in *v/c* due to project:	0.007	Δ*v/c* after mitigation:	0.007
Significant impacted?	NO	Fully mitigated?	N/A

Level of Service Workheet
(Circular 212 Method)

I/S #:	North-South Street:	San Fernando Road	Year of Count:	2015	Ambient Growth: (%):	1.5	Conducted by:	City Traffic Counters	Date:	4/28/2015
CMA20	East-West Street:	SR-118 Freeway EB Ramps	Projection Year:	2018	Peak Hour:	PM	Reviewed by:		Project:	Pacoima Reservoir Project/1-13-4

No. of Phases				2				2				2				2				2			
Opposed Ø'ing: N/S-1, E/W-2 or Both-3?				0				0				0				0				0			
Right Turns: FREE-1, NRTOR-2 or OLA-3?	NB--	0	SB--	3	NB--	0	SB--	3	NB--	0	SB--	3	NB--	0	SB--	3	NB--	0	SB--	3	NB--	0	SB--	3
	EB--	0	WB--	0	EB--	0	WB--	0	EB--	0	WB--	0	EB--	0	WB--	0	EB--	0	WB--	0	EB--	0	WB--	0
ATSAC-1 or ATSAC+ATCS-2?				2				2				2				2				2			
Override Capacity				0				0				0				0				0			

	MOVEMENT	EXISTING CONDITION			EXISTING PLUS PROJECT			FUTURE CONDITION W/O PROJECT				FUTURE CONDITION W/ PROJECT				FUTURE W/ PROJECT W/ MITIGATION			
		Volume	No. of Lanes	Lane Volume	Project Traffic	Total Volume	Lane Volume	Added Volume	Total Volume	No. of Lanes	Lane Volume	Added Volume	Total Volume	No. of Lanes	Lane Volume	Added Volume	Total Volume	No. of Lanes	Lane Volume
NORTHBOUND	Left	124	1	**124**	0	124	**124**	0	130	1	**130**	0	130	1	**130**	0	130	1	**130**
	Left-Through		0							0				0				0	
	Through	803	2	402	20	823	412	14	854	2	427	20	874	2	437	0	874	2	437
	Through-Right		0							0				0				0	
	Right	0	0	0	0	0	0	0	0	0	0	0	0	0	0	0	0	0	0
	Left-Through-Right		0							0				0				0	
	Left-Right		0							0				0				0	
SOUTHBOUND	Left	0	0	0	0	0	0	0	0	0	0	0	0	0	0	0	0	0	0
	Left-Through		0							0				0				0	
	Through	826	2	**413**	20	846	**423**	10	874	2	**437**	20	894	2	**447**	0	894	2	**447**
	Through-Right		0							0				0				0	
	Right	256	1	0	0	256	0	0	268	1	0	0	268	1	0	0	268	1	0
	Left-Through-Right		0							0				0				0	
	Left-Right		0							0				0				0	
EASTBOUND	Left	500	1	375	0	500	375	0	523	1	392	0	523	1	392	0	523	1	392
	Left-Through		0							0				0				0	
	Through	0	0	0	0	0	0	0	0	0	0	0	0	0	0	0	0	0	0
	Through-Right		0							0				0				0	
	Right	250	0	**375**	0	250	**375**	0	261	0	**392**	0	261	0	**392**	0	261	0	**392**
	Left-Through-Right		0							0				0				0	
	Left-Right		1							1				1				1	
WESTBOUND	Left	0	0	**0**	0	0	**0**	0	0	0	**0**	0	0	0	**0**	0	0	0	**0**
	Left-Through		0							0				0				0	
	Through	0	0	0	0	0	0	0	0	0	0	0	0	0	0	0	0	0	0
	Through-Right		0							0				0				0	
	Right	0	0	0	0	0	0	0	0	0	0	0	0	0	0	0	0	0	0
	Left-Through-Right		0							0				0				0	
	Left-Right		0							0				0				0	
CRITICAL VOLUMES			*North-South:*	537		*North-South:*	547			*North-South:*	567			*North-South:*	577			*North-South:*	577
			East-West:	375		*East-West:*	375			*East-West:*	392			*East-West:*	392			*East-West:*	392
			SUM:	912		*SUM:*	922			*SUM:*	959			*SUM:*	969			*SUM:*	969
VOLUME/CAPACITY *(V/C)* RATIO:				0.608			0.615				0.639				0.646				0.646
V/C LESS ATSAC/ATCS ADJUSTMENT:				**0.508**			**0.515**				**0.539**				**0.546**				**0.546**
LEVEL OF SERVICE (LOS):				**A**			**A**				**A**				**A**				**A**

REMARKS: Alt. Route 2: Using only Boulevard Pit

Version: 1i Beta; 8/4/2011

PROJECT IMPACT

Change in *v/c* due to project:	0.007	Δ*v/c* after mitigation:	0.007
Significant impacted?	NO	Fully mitigated?	N/A

Level of Service Workheet
(Circular 212 Method)

I/S #:	North-South Street:	San Fernando Road	Year of Count:	2015	Ambient Growth: (%):	1.5	Conducted by:	City Traffic Counters	Date:	4/28/2015
CMA21	East-West Street:	Van Nuys Boulevard	Projection Year:	2018	Peak Hour:	AM	Reviewed by:		Project:	Pacoima Reservoir Project/1-13-4

No. of Phases				4				4				4				4				4			
Opposed Ø'ing: N/S-1, E/W-2 or Both-3?				0				0				0				0				0			
Right Turns: FREE-1, NRTOR-2 or OLA-3?	NB--	0	SB--	0	NB--	0	SB--	0	NB--	0	SB--	0	NB--	0	SB--	0	NB--	0	SB--	0			
	EB--	3	WB--	2	EB--	3	WB--	2	EB--	3	WB--	2	EB--	3	WB--	2	EB--	3	WB--	2			
ATSAC-1 or ATSAC+ATCS-2?				2				2				2				2				2			
Override Capacity				0				0				0				0				0			

	MOVEMENT	EXISTING CONDITION			EXISTING PLUS PROJECT			FUTURE CONDITION W/O PROJECT				FUTURE CONDITION W/ PROJECT				FUTURE W/ PROJECT W/ MITIGATION			
		Volume	No. of Lanes	Lane Volume	Project Traffic	Total Volume	Lane Volume	Added Volume	Total Volume	No. of Lanes	Lane Volume	Added Volume	Total Volume	No. of Lanes	Lane Volume	Added Volume	Total Volume	No. of Lanes	Lane Volume
NORTHBOUND	Left	41	1	**41**	0	41	**41**	2	45	1	**45**	0	45	1	**45**	0	45	1	**45**
	Left-Through		0							0				0				0	
	Through	475	1	309	20	495	319	11	508	1	329	20	528	1	339	0	528	1	339
	Through-Right		1							1				1				1	
	Right	143	0	143	0	143	143	0	150	0	150	0	150	0	150	0	150	0	150
	Left-Through-Right		0							0				0				0	
	Left-Right		0							0				0				0	
SOUTHBOUND	Left	183	1	183	0	183	183	0	191	1	191	0	191	1	191	0	191	1	191
	Left-Through		0							0				0				0	
	Through	949	1	**511**	20	969	**521**	19	1011	1	**544**	20	1031	1	**554**	0	1031	1	**554**
	Through-Right		1							1				1				1	
	Right	72	0	72	0	72	72	1	76	0	76	0	76	0	76	0	76	0	76
	Left-Through-Right		0							0				0				0	
	Left-Right		0							0				0				0	
EASTBOUND	Left	111	1	111	0	111	111	1	117	1	117	0	117	1	117	0	117	1	117
	Left-Through		0							0				0				0	
	Through	858	2	**429**	0	858	**429**	24	921	2	**461**	0	921	2	**461**	0	921	2	**461**
	Through-Right		0							0				0				0	
	Right	51	1	10	0	51	10	1	54	1	9	0	54	1	9	0	54	1	9
	Left-Through-Right		0							0				0				0	
	Left-Right		0							0				0				0	
WESTBOUND	Left	216	1	**216**	0	216	**216**	0	226	1	**226**	0	226	1	**226**	0	226	1	**226**
	Left-Through		0							0				0				0	
	Through	807	2	404	0	807	404	20	864	2	432	0	864	2	432	0	864	2	432
	Through-Right		0							0				0				0	
	Right	106	1	106	0	106	106	0	111	1	111	0	111	1	111	0	111	1	111
	Left-Through-Right		0							0				0				0	
	Left-Right		0							0				0				0	
CRITICAL VOLUMES		North-South:		552	North-South:		562	North-South:			589	North-South:			599	North-South:			599
		East-West:		645	East-West:		645	East-West:			687	East-West:			687	East-West:			687
		SUM:		1197	SUM:		1207	SUM:			1276	SUM:			1286	SUM:			1286
VOLUME/CAPACITY (V/C) RATIO:				0.871			0.878				0.928				0.935				0.935
V/C LESS ATSAC/ATCS ADJUSTMENT:				**0.771**			**0.778**				**0.828**				**0.835**				**0.835**
LEVEL OF SERVICE (LOS):				**C**			**C**				**D**				**D**				**D**

REMARKS: Alt. Route 2: Using only Boulevard Pit

Version: 1i Beta; 8/4/2011

PROJECT IMPACT

Change in *v/c* due to project:	0.007	Δ*v/c* after mitigation:	0.007
Significant impacted?	NO	Fully mitigated?	N/A

Level of Service Workheet
(Circular 212 Method)

I/S #:	North-South Street:	San Fernando Road	Year of Count:	2015	Ambient Growth: (%):	1.5	Conducted by:	City Traffic Counters	Date:	4/28/2015
CMA21	East-West Street:	Van Nuys Boulevard	Projection Year:	2018	Peak Hour:	Mid-Day	Reviewed by:		Project:	Pacoima Reservoir Project/1-13-4

No. of Phases				4				4				4				4				4			
Opposed Ø'ing: N/S-1, E/W-2 or Both-3?				0				0				0				0				0			
Right Turns: FREE-1, NRTOR-2 or OLA-3?	NB--	0	SB--	0	NB--	0	SB--	0	NB--	0	SB--	0	NB--	0	SB--	0	NB--	0	SB--	0			
	EB--	3	WB--	2	EB--	3	WB--	2	EB--	3	WB--	2	EB--	3	WB--	2	EB--	3	WB--	2			
ATSAC-1 or ATSAC+ATCS-2?				2				2				2				2				2			
Override Capacity				0				0				0				0				0			

	MOVEMENT	EXISTING CONDITION			EXISTING PLUS PROJECT			FUTURE CONDITION W/O PROJECT				FUTURE CONDITION W/ PROJECT				FUTURE W/ PROJECT W/ MITIGATION			
		Volume	No. of Lanes	Lane Volume	Project Traffic	Total Volume	Lane Volume	Added Volume	Total Volume	No. of Lanes	Lane Volume	Added Volume	Total Volume	No. of Lanes	Lane Volume	Added Volume	Total Volume	No. of Lanes	Lane Volume
NORTHBOUND	Left	58	1	58	0	58	58	2	63	1	63	0	63	1	63	0	63	1	63
	Left-Through		0							0				0				0	
	Through	460	1	**273**	20	480	**283**	8	489	1	**290**	20	509	1	**300**	0	509	1	**300**
	Through-Right		1							1				1				1	
	Right	86	0	86	0	86	86	0	90	0	90	0	90	0	90	0	90	0	90
	Left-Through-Right		0							0				0				0	
	Left-Right		0							0				0				0	
SOUTHBOUND	Left	97	1	**97**	0	97	**97**	0	101	1	**101**	0	101	1	**101**	0	101	1	**101**
	Left-Through		0							0				0				0	
	Through	435	1	282	20	455	292	6	461	1	299	20	481	1	309	0	481	1	309
	Through-Right		1							1				1				1	
	Right	129	0	129	0	129	129	1	136	0	136	0	136	0	136	0	136	0	136
	Left-Through-Right		0							0				0				0	
	Left-Right		0							0				0				0	
EASTBOUND	Left	117	1	**117**	0	117	**117**	1	123	1	**123**	0	123	1	**123**	0	123	1	**123**
	Left-Through		0							0				0				0	
	Through	680	2	340	0	680	340	1	712	2	356	0	712	2	356	0	712	2	356
	Through-Right		0							0				0				0	
	Right	92	1	34	0	92	34	1	97	1	34	0	97	1	34	0	97	1	34
	Left-Through-Right		0							0				0				0	
	Left-Right		0							0				0				0	
WESTBOUND	Left	71	1	71	0	71	71	0	74	1	74	0	74	1	74	0	74	1	74
	Left-Through		0							0				0				0	
	Through	605	2	**303**	0	605	**303**	1	634	2	**317**	0	634	2	**317**	0	634	2	**317**
	Through-Right		0							0				0				0	
	Right	81	1	81	0	81	81	0	85	1	85	0	85	1	85	0	85	1	85
	Left-Through-Right		0							0				0				0	
	Left-Right		0							0				0				0	
CRITICAL VOLUMES		*North-South:*		370	*North-South:*		380	*North-South:*			391	*North-South:*			401	*North-South:*			401
		East-West:		420	*East-West:*		420	*East-West:*			440	*East-West:*			440	*East-West:*			440
		SUM:		790	*SUM:*		800	*SUM:*			831	*SUM:*			841	*SUM:*			841
VOLUME/CAPACITY *(V/C)* RATIO:				0.575			0.582				0.604				0.612				0.612
V/C LESS ATSAC/ATCS ADJUSTMENT:				**0.475**			**0.482**				**0.504**				**0.512**				**0.512**
LEVEL OF SERVICE (LOS):				**A**			**A**				**A**				**A**				**A**

REMARKS: Alt. Route 2: Using only Boulevard Pit

Version: 1i Beta; 8/4/2011

PROJECT IMPACT

Change in *v/c* due to project:	0.008	Δ*v/c* after mitigation:	0.008
Significant impacted?	NO	Fully mitigated?	N/A

Level of Service Workheet
(Circular 212 Method)

I/S #:	North-South Street:	San Fernando Road	Year of Count:	2015	Ambient Growth: (%):	1.5	Conducted by:	City Traffic Counters	Date:	4/28/2015
CMA21	East-West Street:	Van Nuys Boulevard	Projection Year:	2018	Peak Hour:	PM	Reviewed by:		Project:	Pacoima Reservoir Project/1-13-4

No. of Phases				4				4				4				4				4			
Opposed Ø'ing: N/S-1, E/W-2 or Both-3?				0				0				0				0				0			
Right Turns: FREE-1, NRTOR-2 or OLA-3?	NB--	0	SB--	0	NB--	0	SB--	0	NB--	0	SB--	0	NB--	0	SB--	0	NB--	0	SB--	0			
	EB--	3	WB--	2	EB--	3	WB--	2	EB--	3	WB--	2	EB--	3	WB--	2	EB--	3	WB--	2			
ATSAC-1 or ATSAC+ATCS-2?				2				2				2				2				2			
Override Capacity				0				0				0				0				0			

	MOVEMENT	EXISTING CONDITION			EXISTING PLUS PROJECT			FUTURE CONDITION W/O PROJECT				FUTURE CONDITION W/ PROJECT				FUTURE W/ PROJECT W/ MITIGATION			
		Volume	No. of Lanes	Lane Volume	Project Traffic	Total Volume	Lane Volume	Added Volume	Total Volume	No. of Lanes	Lane Volume	Added Volume	Total Volume	No. of Lanes	Lane Volume	Added Volume	Total Volume	No. of Lanes	Lane Volume
NORTHBOUND	Left	85	1	85	0	85	85	2	91	1	91	0	91	1	91	0	91	1	91
	Left-Through		0							0				0				0	
	Through	628	1	**365**	20	648	**375**	13	670	1	**389**	20	690	1	**399**	0	690	1	**399**
	Through-Right		1							1				1				1	
	Right	102	0	102	0	102	102	0	107	0	107	0	107	0	107	0	107	0	107
	Left-Through-Right		0							0				0				0	
	Left-Right		0							0				0				0	
SOUTHBOUND	Left	139	1	**139**	0	139	**139**	0	145	1	**145**	0	145	1	**145**	0	145	1	**145**
	Left-Through		0							0				0				0	
	Through	575	1	365	20	595	375	9	610	1	387	20	630	1	397	0	630	1	397
	Through-Right		1							1				1				1	
	Right	155	0	155	0	155	155	1	163	0	163	0	163	0	163	0	163	0	163
	Left-Through-Right		0							0				0				0	
	Left-Right		0							0				0				0	
EASTBOUND	Left	82	1	82	0	82	82	1	87	1	87	0	87	1	87	0	87	1	87
	Left-Through		0							0				0				0	
	Through	848	2	**424**	0	848	**424**	14	901	2	**451**	0	901	2	**451**	0	901	2	**451**
	Through-Right		0							0				0				0	
	Right	112	1	27	0	112	27	1	118	1	27	0	118	1	27	0	118	1	27
	Left-Through-Right		0							0				0				0	
	Left-Right		0							0				0				0	
WESTBOUND	Left	115	1	**115**	0	115	**115**	0	120	1	**120**	0	120	1	**120**	0	120	1	**120**
	Left-Through		0							0				0				0	
	Through	889	2	445	0	889	445	15	945	2	473	0	945	2	473	0	945	2	473
	Through-Right		0							0				0				0	
	Right	107	1	107	0	107	107	0	112	1	112	0	112	1	112	0	112	1	112
	Left-Through-Right		0							0				0				0	
	Left-Right		0							0				0				0	
CRITICAL VOLUMES		*North-South:*		504	*North-South:*		514	*North-South:*			534	*North-South:*			544	*North-South:*			544
		East-West:		539	*East-West:*		539	*East-West:*			571	*East-West:*			571	*East-West:*			571
		SUM:		1043	*SUM:*		1053	*SUM:*			1105	*SUM:*			1115	*SUM:*			1115
VOLUME/CAPACITY *(V/C)* RATIO:				0.759			0.766				0.804				0.811				0.811
V/C LESS ATSAC/ATCS ADJUSTMENT:				**0.659**			**0.666**				**0.704**				**0.711**				**0.711**
LEVEL OF SERVICE (LOS):				**B**			**B**				**C**				**C**				**C**

REMARKS: Alt. Route 2: Using only Boulevard Pit

Version: 1i Beta; 8/4/2011

PROJECT IMPACT

Change in *v/c* due to project:	0.007	Δ*v/c* after mitigation:	0.007
Significant impacted?	NO	Fully mitigated?	N/A

Level of Service Workheet
(Circular 212 Method)

I/S #:	North-South Street:	San Fernando Road	Year of Count:	2015	Ambient Growth: (%):	1.5	Conducted by:	City Traffic Counters	Date:	4/28/2015
CMA22	East-West Street:	Pierce Street	Projection Year:	2018	Peak Hour:	AM	Reviewed by:		Project:	Pacoima Reservoir Project/1-13-4

No. of Phases				4				4				4				4				4			4
Opposed Ø'ing: N/S-1, E/W-2 or Both-3?				2				2				2				2				2			2
Right Turns: FREE-1, NRTOR-2 or OLA-3?	NB--	0	SB--	0	NB--	0	SB--	0	NB--	0	SB--	0	NB--	0	SB--	0	NB--	0	SB--	0	NB--	0	SB--	0
	EB--	0	WB--	2	EB--	0	WB--	2	EB--	0	WB--	2	EB--	0	WB--	2	EB--	0	WB--	2	EB--	0	WB--	2
ATSAC-1 or ATSAC+ATCS-2?				2				2				2				2				2				2
Override Capacity				0				0				0				0				0				0

MOVEMENT		EXISTING CONDITION			EXISTING PLUS PROJECT			FUTURE CONDITION W/O PROJECT				FUTURE CONDITION W/ PROJECT				FUTURE W/ PROJECT W/ MITIGATION			
		Volume	No. of Lanes	Lane Volume	Project Traffic	Total Volume	Lane Volume	Added Volume	Total Volume	No. of Lanes	Lane Volume	Added Volume	Total Volume	No. of Lanes	Lane Volume	Added Volume	Total Volume	No. of Lanes	Lane Volume
NORTHBOUND	Left	35	1	**35**	0	35	**35**	0	37	1	**37**	0	37	1	**37**	0	37	1	**37**
	Left-Through		0							0				0				0	
	Through	510	1	342	20	530	352	13	546	1	372	20	566	1	382	0	566	1	382
	Through-Right		1							1				1				1	
	Right	174	0	174	0	174	174	15	197	0	197	0	197	0	197	0	197	0	197
	Left-Through-Right		0							0				0				0	
	Left-Right		0							0				0				0	
SOUTHBOUND	Left	31	1	31	0	31	31	0	32	1	32	0	32	1	32	0	32	1	32
	Left-Through		0							0				0				0	
	Through	1135	2	**568**	20	1155	**578**	20	1207	2	**604**	20	1227	2	**614**	0	1227	2	**614**
	Through-Right		0							0				0				0	
	Right	90	1	55	0	90	55	0	94	1	58	0	94	1	58	0	94	1	58
	Left-Through-Right		0							0				0				0	
	Left-Right		0							0				0				0	
EASTBOUND	Left	70	0	70	0	70	70	0	73	0	73	0	73	0	73	0	73	0	73
	Left-Through		0							0				0				0	
	Through	137	0	**247**	0	137	**247**	23	166	0	**281**	0	166	0	**281**	0	166	0	**281**
	Through-Right		0							0				0				0	
	Right	40	0	0	0	40	0	0	42	0	0	0	42	0	0	0	42	0	0
	Left-Through-Right		1							1				1				1	
	Left-Right		0							0				0				0	
WESTBOUND	Left	196	0	196	0	196	196	13	218	0	218	0	218	0	218	0	218	0	218
	Left-Through		0							0				0				0	
	Through	137	0	**379**	0	137	**379**	19	162	0	**428**	0	162	0	**428**	0	162	0	**428**
	Through-Right		0							0				0				0	
	Right	46	0	0	0	46	0	0	48	0	0	0	48	0	0	0	48	0	0
	Left-Through-Right		1							1				1				1	
	Left-Right		0							0				0				0	
CRITICAL VOLUMES		*North-South:*		603	*North-South:*		613	*North-South:*			641	*North-South:*			651	*North-South:*			651
		East-West:		626	*East-West:*		626	*East-West:*			709	*East-West:*			709	*East-West:*			709
		SUM:		1229	*SUM:*		1239	*SUM:*			1350	*SUM:*			1360	*SUM:*			1360
VOLUME/CAPACITY *(V/C)* RATIO:				0.894			0.901				0.982				0.989				0.989
V/C LESS ATSAC/ATCS ADJUSTMENT:				**0.794**			**0.801**				**0.882**				**0.889**				**0.889**
LEVEL OF SERVICE (LOS):				**C**			**D**				**D**				**D**				**D**

REMARKS: Alt. Route 2: Using only Boulevard Pit

Version: 1i Beta; 8/4/2011

PROJECT IMPACT

Change in *v/c* due to project:	0.007	Δ*v/c* after mitigation:	0.007
Significant impacted?	NO	Fully mitigated?	N/A

Level of Service Workheet
(Circular 212 Method)

I/S #:	North-South Street:	San Fernando Road	Year of Count:	2015	Ambient Growth: (%):	1.5	Conducted by:	City Traffic Counters	Date:	4/28/2015
CMA22	East-West Street:	Pierce Street	Projection Year:	2018	Peak Hour:	Mid-Day	Reviewed by:		Project:	Pacoima Reservoir Project/1-13-4

No. of Phases				4				4				4				4				4			4
Opposed Ø'ing: N/S-1, E/W-2 or Both-3?				2				2				2				2				2			2
Right Turns: FREE-1, NRTOR-2 or OLA-3?	NB--	0	SB--	0	NB--	0	SB--	0	NB--	0	SB--	0	NB--	0	SB--	0	NB--	0	SB--	0	NB--	0	SB--	0
	EB--	0	WB--	2	EB--	0	WB--	2	EB--	0	WB--	2	EB--	0	WB--	2	EB--	0	WB--	2	EB--	0	WB--	2
ATSAC-1 or ATSAC+ATCS-2?				2				2				2				2				2				2
Override Capacity				0				0				0				0				0				0

MOVEMENT		EXISTING CONDITION			EXISTING PLUS PROJECT			FUTURE CONDITION W/O PROJECT				FUTURE CONDITION W/ PROJECT				FUTURE W/ PROJECT W/ MITIGATION			
		Volume	No. of Lanes	Lane Volume	Project Traffic	Total Volume	Lane Volume	Added Volume	Total Volume	No. of Lanes	Lane Volume	Added Volume	Total Volume	No. of Lanes	Lane Volume	Added Volume	Total Volume	No. of Lanes	Lane Volume
NORTHBOUND	Left	24	1	24	0	24	24	0	25	1	25	0	25	1	25	0	25	1	25
	Left-Through		0							0				0				0	
	Through	506	1	**305**	20	526	**315**	10	539	1	**324**	20	559	1	**334**	0	559	1	**334**
	Through-Right		1							1				1				1	
	Right	103	0	103	0	103	103	0	108	0	108	0	108	0	108	0	108	0	108
	Left-Through-Right		0							0				0				0	
	Left-Right		0							0				0				0	
SOUTHBOUND	Left	35	1	**35**	0	35	**35**	0	37	1	**37**	0	37	1	**37**	0	37	1	**37**
	Left-Through		0							0				0				0	
	Through	549	2	275	20	569	285	7	581	2	291	20	601	2	301	0	601	2	301
	Through-Right		0							0				0				0	
	Right	88	1	59	0	88	59	0	92	1	62	0	92	1	62	0	92	1	62
	Left-Through-Right		0							0				0				0	
	Left-Right		0							0				0				0	
EASTBOUND	Left	58	0	58	0	58	58	0	61	0	61	0	61	0	61	0	61	0	61
	Left-Through		0							0				0				0	
	Through	75	0	**158**	0	75	**158**	0	78	0	**165**	0	78	0	**165**	0	78	0	**165**
	Through-Right		0							0				0				0	
	Right	25	0	0	0	25	0	0	26	0	0	0	26	0	0	0	26	0	0
	Left-Through-Right		1							1				1				1	
	Left-Right		0							0				0				0	
WESTBOUND	Left	80	0	80	0	80	80	0	84	0	84	0	84	0	84	0	84	0	84
	Left-Through		0							0				0				0	
	Through	50	0	**160**	0	50	**160**	0	52	0	**167**	0	52	0	**167**	0	52	0	**167**
	Through-Right		0							0				0				0	
	Right	30	0	0	0	30	0	0	31	0	0	0	31	0	0	0	31	0	0
	Left-Through-Right		1							1				1				1	
	Left-Right		0							0				0				0	
CRITICAL VOLUMES			*North-South:*	340		*North-South:*	350		*North-South:*	361			*North-South:*	371			*North-South:*	371	
			East-West:	318		*East-West:*	318		*East-West:*	332			*East-West:*	332			*East-West:*	332	
			SUM:	658		*SUM:*	668		*SUM:*	693			*SUM:*	703			*SUM:*	703	
VOLUME/CAPACITY *(V/C)* RATIO:				0.479			0.486				0.504				0.511				0.511
V/C LESS ATSAC/ATCS ADJUSTMENT:				**0.379**			**0.386**				**0.404**				**0.411**				**0.411**
LEVEL OF SERVICE (LOS):				**A**			**A**				**A**				**A**				**A**

REMARKS: Alt. Route 2: Using only Boulevard Pit

Version: 1i Beta; 8/4/2011

PROJECT IMPACT

Change in *v/c* due to project:	0.007	Δ*v/c* after mitigation:	0.007
Significant impacted?	NO	Fully mitigated?	N/A

Level of Service Workheet
(Circular 212 Method)

I/S #:	North-South Street:	San Fernando Road	Year of Count:	2015	Ambient Growth: (%):	1.5	Conducted by:	City Traffic Counters	Date:	4/28/2015
CMA22	East-West Street:	Pierce Street	Projection Year:	2018	Peak Hour:	PM	Reviewed by:		Project:	Pacoima Reservoir Project/1-13-4

No. of Phases				4				4				4				4				4			4
Opposed Ø'ing: N/S-1, E/W-2 or Both-3?				2				2				2				2				2			2
Right Turns: FREE-1, NRTOR-2 or OLA-3?	NB--	0	SB--	0	NB--	0	SB--	0	NB--	0	SB--	0	NB--	0	SB--	0	NB--	0	SB--	0	NB--	0	SB--	0
	EB--	0	WB--	2	EB--	0	WB--	2	EB--	0	WB--	2	EB--	0	WB--	2	EB--	0	WB--	2	EB--	0	WB--	2
ATSAC-1 or ATSAC+ATCS-2?				2				2				2				2				2				2
Override Capacity				0				0				0				0				0				0

MOVEMENT		EXISTING CONDITION			EXISTING PLUS PROJECT			FUTURE CONDITION W/O PROJECT				FUTURE CONDITION W/ PROJECT				FUTURE W/ PROJECT W/ MITIGATION			
		Volume	No. of Lanes	Lane Volume	Project Traffic	Total Volume	Lane Volume	Added Volume	Total Volume	No. of Lanes	Lane Volume	Added Volume	Total Volume	No. of Lanes	Lane Volume	Added Volume	Total Volume	No. of Lanes	Lane Volume
NORTHBOUND	Left	45	1	45	0	45	45	0	47	1	47	0	47	1	47	0	47	1	47
	Left-Through		0							0				0				0	
	Through	772	1	**482**	20	792	**492**	15	822	1	**516**	20	842	1	**526**	0	842	1	**526**
	Through-Right		1							1				1				1	
	Right	191	0	191	0	191	191	9	209	0	209	0	209	0	209	0	209	0	209
	Left-Through-Right		0							0				0				0	
	Left-Right		0							0				0				0	
SOUTHBOUND	Left	43	1	**43**	0	43	**43**	0	45	1	**45**	0	45	1	**45**	0	45	1	**45**
	Left-Through		0							0				0				0	
	Through	658	2	329	20	678	339	10	698	2	349	20	718	2	359	0	718	2	359
	Through-Right		0							0				0				0	
	Right	100	1	67	0	100	67	0	105	1	71	0	105	1	71	0	105	1	71
	Left-Through-Right		0							0				0				0	
	Left-Right		0							0				0				0	
EASTBOUND	Left	66	0	66	0	66	66	0	69	0	69	0	69	0	69	0	69	0	69
	Left-Through		0							0				0				0	
	Through	129	0	**239**	0	129	**239**	13	148	0	**263**	0	148	0	**263**	0	148	0	**263**
	Through-Right		0							0				0				0	
	Right	44	0	0	0	44	0	0	46	0	0	0	46	0	0	0	46	0	0
	Left-Through-Right		1							1				1				1	
	Left-Right		0							0				0				0	
WESTBOUND	Left	138	0	138	0	138	138	10	154	0	154	0	154	0	154	0	154	0	154
	Left-Through		0							0				0				0	
	Through	120	0	**314**	0	120	**314**	14	139	0	**352**	0	139	0	**352**	0	139	0	**352**
	Through-Right		0							0				0				0	
	Right	56	0	0	0	56	0	0	59	0	0	0	59	0	0	0	59	0	0
	Left-Through-Right		1							1				1				1	
	Left-Right		0							0				0				0	
CRITICAL VOLUMES		*North-South:*		525	*North-South:*		535	*North-South:*			561	*North-South:*			571	*North-South:*			571
		East-West:		553	*East-West:*		553	*East-West:*			615	*East-West:*			615	*East-West:*			615
		SUM:		1078	*SUM:*		1088	*SUM:*			1176	*SUM:*			1186	*SUM:*			1186
VOLUME/CAPACITY *(V/C)* RATIO:				0.784			0.791				0.855				0.863				0.863
V/C LESS ATSAC/ATCS ADJUSTMENT:				**0.684**			**0.691**				**0.755**				**0.763**				**0.763**
LEVEL OF SERVICE (LOS):				**B**			**B**				**C**				**C**				**C**

REMARKS: Alt. Route 2: Using only Boulevard Pit

Version: 1i Beta; 8/4/2011

PROJECT IMPACT

Change in *v/c* due to project:	0.008	Δ*v/c* after mitigation:	0.008
Significant impacted?	NO	Fully mitigated?	N/A

Level of Service Workheet
(Circular 212 Method)

I/S #:	North-South Street:	San Fernando Road	Year of Count:	2015	Ambient Growth: (%):	1.5	Conducted by:	City Traffic Counters	Date:	4/28/2015
CMA23	East-West Street:	Terra Bella Street	Projection Year:	2018	Peak Hour:	AM	Reviewed by:		Project:	Pacoima Reservoir Project/1-13-4

No. of Phases				2				2				2				2				2			
Opposed Ø'ing: N/S-1, E/W-2 or Both-3?				0				0				0				0				0			
Right Turns: FREE-1, NRTOR-2 or OLA-3?	NB--	0	SB--	0	NB--	0	SB--	0	NB--	0	SB--	0	NB--	0	SB--	0	NB--	0	SB--	0			
	EB--	0	WB--	0	EB--	0	WB--	0	EB--	0	WB--	0	EB--	0	WB--	0	EB--	0	WB--	0			
ATSAC-1 or ATSAC+ATCS-2?				2				2				2				2				2			
Override Capacity				0				0				0				0				0			

	MOVEMENT	EXISTING CONDITION			EXISTING PLUS PROJECT			FUTURE CONDITION W/O PROJECT				FUTURE CONDITION W/ PROJECT				FUTURE W/ PROJECT W/ MITIGATION			
		Volume	No. of Lanes	Lane Volume	Project Traffic	Total Volume	Lane Volume	Added Volume	Total Volume	No. of Lanes	Lane Volume	Added Volume	Total Volume	No. of Lanes	Lane Volume	Added Volume	Total Volume	No. of Lanes	Lane Volume
NORTHBOUND	Left	54	1	**54**	0	54	**54**	0	56	1	**56**	0	56	1	**56**	0	56	1	**56**
	Left-Through		0							0				0				0	
	Through	485	2	243	20	505	253	14	521	2	261	20	541	2	271	0	541	2	271
	Through-Right		0							0				0				0	
	Right	0	0	0	0	0	0	0	0	0	0	0	0	0	0	0	0	0	0
	Left-Through-Right		0							0				0				0	
	Left-Right		0							0				0				0	
SOUTHBOUND	Left	0	0	0	0	0	0	0	0	0	0	0	0	0	0	0	0	0	0
	Left-Through		0							0				0				0	
	Through	1224	1	**717**	20	1244	**727**	15	1295	1	**766**	20	1315	1	**776**	0	1315	1	**776**
	Through-Right		1							1				1				1	
	Right	210	0	210	0	210	210	17	237	0	237	0	237	0	237	0	237	0	237
	Left-Through-Right		0							0				0				0	
	Left-Right		0							0				0				0	
EASTBOUND	Left	239	1	**239**	0	239	**239**	15	265	1	**265**	0	265	1	**265**	0	265	1	**265**
	Left-Through		0							0				0				0	
	Through	0	0	0	0	0	0	0	0	0	0	0	0	0	0	0	0	0	0
	Through-Right		0							0				0				0	
	Right	116	1	89	0	116	89	0	121	1	93	0	121	1	93	0	121	1	93
	Left-Through-Right		0							0				0				0	
	Left-Right		0							0				0				0	
WESTBOUND	Left	0	0	0	0	0	0	0	0	0	0	0	0	0	0	0	0	0	0
	Left-Through		0							0				0				0	
	Through	0	0	**0**	0	0	**0**	0	0	0	**0**	0	0	0	**0**	0	0	0	**0**
	Through-Right		0							0				0				0	
	Right	0	0	0	0	0	0	0	0	0	0	0	0	0	0	0	0	0	0
	Left-Through-Right		0							0				0				0	
	Left-Right		0							0				0				0	
CRITICAL VOLUMES		*North-South:*		771	*North-South:*		781	*North-South:*			822	*North-South:*			832	*North-South:*			832
		East-West:		239	*East-West:*		239	*East-West:*			265	*East-West:*			265	*East-West:*			265
		SUM:		1010	*SUM:*		1020	*SUM:*			1087	*SUM:*			1097	*SUM:*			1097
VOLUME/CAPACITY *(V/C)* RATIO:				0.673			0.680				0.725				0.731				0.731
V/C LESS ATSAC/ATCS ADJUSTMENT:				**0.573**			**0.580**				**0.625**				**0.631**				**0.631**
LEVEL OF SERVICE (LOS):				**A**			**A**				**B**				**B**				**B**

REMARKS: Alt. Route 2: Using only Boulevard Pit

Version: 1i Beta; 8/4/2011

PROJECT IMPACT

Change in *v/c* due to project:	0.006	Δ*v/c* after mitigation:	0.006
Significant impacted?	NO	Fully mitigated?	N/A

Level of Service Workheet
(Circular 212 Method)

I/S #:	North-South Street:	San Fernando Road	Year of Count:	2015	Ambient Growth: (%):	1.5	Conducted by:	City Traffic Counters	Date:	4/28/2015
CMA23	East-West Street:	Terra Bella Street	Projection Year:	2018	Peak Hour:	Mid-Day	Reviewed by:		Project:	Pacoima Reservoir Project/1-13-4

No. of Phases				2				2				2				2				2			
Opposed Ø'ing: N/S-1, E/W-2 or Both-3?				0				0				0				0				0			
Right Turns: FREE-1, NRTOR-2 or OLA-3?	NB--	0	SB--	0	NB--	0	SB--	0	NB--	0	SB--	0	NB--	0	SB--	0	NB--	0	SB--	0			
	EB--	0	WB--	0	EB--	0	WB--	0	EB--	0	WB--	0	EB--	0	WB--	0	EB--	0	WB--	0			
ATSAC-1 or ATSAC+ATCS-2?				2				2				2				2				2			
Override Capacity				0				0				0				0				0			

	MOVEMENT	EXISTING CONDITION			EXISTING PLUS PROJECT			FUTURE CONDITION W/O PROJECT				FUTURE CONDITION W/ PROJECT				FUTURE W/ PROJECT W/ MITIGATION			
		Volume	No. of Lanes	Lane Volume	Project Traffic	Total Volume	Lane Volume	Added Volume	Total Volume	No. of Lanes	Lane Volume	Added Volume	Total Volume	No. of Lanes	Lane Volume	Added Volume	Total Volume	No. of Lanes	Lane Volume
NORTHBOUND	Left	64	1	**64**	0	64	**64**	0	67	1	**67**	0	67	1	**67**	0	67	1	**67**
	Left-Through		0							0				0				0	
	Through	481	2	241	20	501	251	10	513	2	257	20	533	2	267	0	533	2	267
	Through-Right		0							0				0				0	
	Right	0	0	0	0	0	0	0	0	0	0	0	0	0	0	0	0	0	0
	Left-Through-Right		0							0				0				0	
	Left-Right		0							0				0				0	
SOUTHBOUND	Left	0	0	0	0	0	0	0	0	0	0	0	0	0	0	0	0	0	0
	Left-Through		0							0				0				0	
	Through	547	1	**332**	20	567	**342**	7	579	1	**350**	20	599	1	**360**	0	599	1	**360**
	Through-Right		1							1				1				1	
	Right	116	0	116	0	116	116	0	121	0	121	0	121	0	121	0	121	0	121
	Left-Through-Right		0							0				0				0	
	Left-Right		0							0				0				0	
EASTBOUND	Left	126	1	**126**	0	126	**126**	0	132	1	**132**	0	132	1	**132**	0	132	1	**132**
	Left-Through		0							0				0				0	
	Through	0	0	0	0	0	0	0	0	0	0	0	0	0	0	0	0	0	0
	Through-Right		0							0				0				0	
	Right	74	1	42	0	74	42	0	77	1	44	0	77	1	44	0	77	1	44
	Left-Through-Right		0							0				0				0	
	Left-Right		0							0				0				0	
WESTBOUND	Left	0	0	0	0	0	0	0	0	0	0	0	0	0	0	0	0	0	0
	Left-Through		0							0				0				0	
	Through	0	0	**0**	0	0	**0**	0	0	0	**0**	0	0	0	**0**	0	0	0	**0**
	Through-Right		0							0				0				0	
	Right	0	0	0	0	0	0	0	0	0	0	0	0	0	0	0	0	0	0
	Left-Through-Right		0							0				0				0	
	Left-Right		0							0				0				0	
CRITICAL VOLUMES		*North-South:*		396	*North-South:*		406	*North-South:*			417	*North-South:*			427	*North-South:*			427
		East-West:		126	*East-West:*		126	*East-West:*			132	*East-West:*			132	*East-West:*			132
		SUM:		522	*SUM:*		532	*SUM:*			549	*SUM:*			559	*SUM:*			559
VOLUME/CAPACITY *(V/C)* RATIO:				0.348			0.355				0.366				0.373				0.373
V/C LESS ATSAC/ATCS ADJUSTMENT:				**0.248**			**0.255**				**0.266**				**0.273**				**0.273**
LEVEL OF SERVICE (LOS):				**A**			**A**				**A**				**A**				**A**

REMARKS: Alt. Route 2: Using only Boulevard Pit

Version: 1i Beta; 8/4/2011

PROJECT IMPACT

Change in *v/c* due to project:	0.007	Δ*v/c* after mitigation:	0.007
Significant impacted?	NO	Fully mitigated?	N/A

Level of Service Workheet
(Circular 212 Method)

I/S #:	North-South Street:	San Fernando Road	Year of Count:	2015	Ambient Growth: (%):	1.5	Conducted by:	City Traffic Counters	Date:	4/28/2015
CMA23	East-West Street:	Terra Bella Street	Projection Year:	2018	Peak Hour:	PM	Reviewed by:		Project:	Pacoima Reservoir Project/1-13-4

No. of Phases				2				2				2				2				2			
Opposed Ø'ing: N/S-1, E/W-2 or Both-3?				0				0				0				0				0			
Right Turns: FREE-1, NRTOR-2 or OLA-3?	NB--	0	SB--	0	NB--	0	SB--	0	NB--	0	SB--	0	NB--	0	SB--	0	NB--	0	SB--	0			
	EB--	0	WB--	0	EB--	0	WB--	0	EB--	0	WB--	0	EB--	0	WB--	0	EB--	0	WB--	0			
ATSAC-1 or ATSAC+ATCS-2?				2				2				2				2				2			
Override Capacity				0				0				0				0				0			

	MOVEMENT	EXISTING CONDITION			EXISTING PLUS PROJECT			FUTURE CONDITION W/O PROJECT				FUTURE CONDITION W/ PROJECT				FUTURE W/ PROJECT W/ MITIGATION			
		Volume	No. of Lanes	Lane Volume	Project Traffic	Total Volume	Lane Volume	Added Volume	Total Volume	No. of Lanes	Lane Volume	Added Volume	Total Volume	No. of Lanes	Lane Volume	Added Volume	Total Volume	No. of Lanes	Lane Volume
NORTHBOUND	Left	111	1	**111**	0	111	**111**	0	116	1	**116**	0	116	1	**116**	0	116	1	**116**
	Left-Through		0							0				0				0	
	Through	807	2	404	20	827	414	14	858	2	429	20	878	2	439	0	878	2	439
	Through-Right		0							0				0				0	
	Right	1	0	0	0	1	0	0	1	0	0	0	1	0	0	0	1	0	0
	Left-Through-Right		0							0				0				0	
	Left-Right		0							0				0				0	
SOUTHBOUND	Left	0	0	0	0	0	0	0	0	0	0	0	0	0	0	0	0	0	0
	Left-Through		0							0				0				0	
	Through	677	1	**429**	20	697	**439**	12	720	1	**458**	20	740	1	**468**	0	740	1	**468**
	Through-Right		1							1				1				1	
	Right	180	0	180	0	180	180	8	196	0	196	0	196	0	196	0	196	0	196
	Left-Through-Right		0							0				0				0	
	Left-Right		0							0				0				0	
EASTBOUND	Left	220	1	**220**	0	220	**220**	9	239	1	**239**	0	239	1	**239**	0	239	1	**239**
	Left-Through		0							0				0				0	
	Through	0	0	0	0	0	0	0	0	0	0	0	0	0	0	0	0	0	0
	Through-Right		0							0				0				0	
	Right	117	1	62	0	117	62	0	122	1	64	0	122	1	64	0	122	1	64
	Left-Through-Right		0							0				0				0	
	Left-Right		0							0				0				0	
WESTBOUND	Left	0	0	0	0	0	0	0	0	0	0	0	0	0	0	0	0	0	0
	Left-Through		0							0				0				0	
	Through	0	0	**0**	0	0	**0**	0	0	0	**0**	0	0	0	**0**	0	0	0	**0**
	Through-Right		0							0				0				0	
	Right	0	0	0	0	0	0	0	0	0	0	0	0	0	0	0	0	0	0
	Left-Through-Right		0							0				0				0	
	Left-Right		0							0				0				0	
CRITICAL VOLUMES		*North-South:*		540	*North-South:*		550	*North-South:*			574	*North-South:*			584	*North-South:*			584
		East-West:		220	*East-West:*		220	*East-West:*			239	*East-West:*			239	*East-West:*			239
		SUM:		760	*SUM:*		770	*SUM:*			813	*SUM:*			823	*SUM:*			823
VOLUME/CAPACITY *(V/C)* RATIO:				0.507			0.513				0.542				0.549				0.549
V/C LESS ATSAC/ATCS ADJUSTMENT:				**0.407**			**0.413**				**0.442**				**0.449**				**0.449**
LEVEL OF SERVICE (LOS):				**A**			**A**				**A**				**A**				**A**

REMARKS: Alt. Route 2: Using only Boulevard Pit

Version: 1i Beta; 8/4/2011

PROJECT IMPACT

Change in *v/c* due to project:	0.007	Δ*v/c* after mitigation:	0.007
Significant impacted?	NO	Fully mitigated?	N/A

Level of Service Workheet
(Circular 212 Method)

I/S #:	North-South Street:	San Fernando Road	Year of Count:	2015	Ambient Growth: (%):	1.5	Conducted by:	City Traffic Counters	Date:	4/28/2015
CMA24	East-West Street:	Osborne Street	Projection Year:	2018	Peak Hour:	AM	Reviewed by:		Project:	Pacoima Reservoir Project/1-13-4

No. of Phases				4				4				4				4				4			4
Opposed Ø'ing: N/S-1, E/W-2 or Both-3?				2				2				2				2				2			2
Right Turns: FREE-1, NRTOR-2 or OLA-3?	NB--	0	SB--	0	NB--	0	SB--	0	NB--	0	SB--	0	NB--	0	SB--	0	NB--	0	SB--	0			
	EB--	0	WB--	2	EB--	0	WB--	2	EB--	0	WB--	2	EB--	0	WB--	2	EB--	0	WB--	2			
ATSAC-1 or ATSAC+ATCS-2?				2				2				2				2				2			2
Override Capacity				0				0				0				0				0			0

	MOVEMENT	EXISTING CONDITION			EXISTING PLUS PROJECT			FUTURE CONDITION W/O PROJECT				FUTURE CONDITION W/ PROJECT				FUTURE W/ PROJECT W/ MITIGATION			
		Volume	No. of Lanes	Lane Volume	Project Traffic	Total Volume	Lane Volume	Added Volume	Total Volume	No. of Lanes	Lane Volume	Added Volume	Total Volume	No. of Lanes	Lane Volume	Added Volume	Total Volume	No. of Lanes	Lane Volume
NORTHBOUND	Left	28	1	**28**	0	28	**28**	0	29	1	**29**	0	29	1	**29**	0	29	1	**29**
	Left-Through		0							0				0				0	
	Through	324	1	196	20	344	206	4	343	1	207	20	363	1	217	0	363	1	217
	Through-Right		1							1				1				1	
	Right	68	0	68	0	68	68	0	71	0	71	0	71	0	71	0	71	0	71
	Left-Through-Right		0							0				0				0	
	Left-Right		0							0				0				0	
SOUTHBOUND	Left	110	1	110	0	110	110	1	116	1	116	0	116	1	116	0	116	1	116
	Left-Through		0							0				0				0	
	Through	875	1	**471**	20	895	**481**	8	923	1	**500**	20	943	1	**510**	0	943	1	**510**
	Through-Right		1							1				1				1	
	Right	67	0	67	0	67	67	6	76	0	76	0	76	0	76	0	76	0	76
	Left-Through-Right		0							0				0				0	
	Left-Right		0							0				0				0	
EASTBOUND	Left	78	1	78	0	78	78	8	90	1	90	0	90	1	90	0	90	1	90
	Left-Through		0							0				0				0	
	Through	587	1	**318**	0	587	**318**	7	621	1	**336**	0	621	1	**336**	0	621	1	**336**
	Through-Right		1							1				1				1	
	Right	48	0	48	0	48	48	0	50	0	50	0	50	0	50	0	50	0	50
	Left-Through-Right		0							0				0				0	
	Left-Right		0							0				0				0	
WESTBOUND	Left	82	1	82	0	82	82	0	86	1	86	0	86	1	86	0	86	1	86
	Left-Through		0							0				0				0	
	Through	764	1	**431**	0	764	**431**	11	810	1	**457**	0	810	1	**457**	0	810	1	**457**
	Through-Right		1							1				1				1	
	Right	98	0	98	0	98	98	2	104	0	104	0	104	0	104	0	104	0	104
	Left-Through-Right		0							0				0				0	
	Left-Right		0							0				0				0	
CRITICAL VOLUMES		*North-South:*		499	*North-South:*		509	*North-South:*			529	*North-South:*			539	*North-South:*			539
		East-West:		749	*East-West:*		749	*East-West:*			793	*East-West:*			793	*East-West:*			793
		SUM:		1248	*SUM:*		1258	*SUM:*			1322	*SUM:*			1332	*SUM:*			1332
VOLUME/CAPACITY *(V/C)* RATIO:				0.908			0.915				0.961				0.969				0.969
V/C LESS ATSAC/ATCS ADJUSTMENT:				**0.808**			**0.815**				**0.861**				**0.869**				**0.869**
LEVEL OF SERVICE (LOS):				**D**			**D**				**D**				**D**				**D**

REMARKS: Alt. Route 2: Using only Boulevard Pit

Version: 1i Beta; 8/4/2011

PROJECT IMPACT

Change in *v/c* due to project:	0.008	Δ*v/c* after mitigation:	0.008
Significant impacted?	NO	Fully mitigated?	N/A

Level of Service Workheet
(Circular 212 Method)

I/S #:	North-South Street:	San Fernando Road	Year of Count:	2015	Ambient Growth: (%):	1.5	Conducted by:	City Traffic Counters	Date:	4/28/2015
CMA24	East-West Street:	Osborne Street	Projection Year:	2018	Peak Hour:	Mid-Day	Reviewed by:		Project:	Pacoima Reservoir Project/1-13-4

No. of Phases				4				4				4				4				4			4
Opposed Ø'ing: N/S-1, E/W-2 or Both-3?				2				2				2				2				2			2
Right Turns: FREE-1, NRTOR-2 or OLA-3?	NB--	0	SB--	0	NB--	0	SB--	0	NB--	0	SB--	0	NB--	0	SB--	0	NB--	0	SB--	0	NB--	0	SB--	0
	EB--	0	WB--	2	EB--	0	WB--	2	EB--	0	WB--	2	EB--	0	WB--	2	EB--	0	WB--	2	EB--	0	WB--	2
ATSAC-1 or ATSAC+ATCS-2?				2				2				2				2				2				2
Override Capacity				0				0				0				0				0				0

MOVEMENT		EXISTING CONDITION			EXISTING PLUS PROJECT			FUTURE CONDITION W/O PROJECT				FUTURE CONDITION W/ PROJECT				FUTURE W/ PROJECT W/ MITIGATION			
		Volume	No. of Lanes	Lane Volume	Project Traffic	Total Volume	Lane Volume	Added Volume	Total Volume	No. of Lanes	Lane Volume	Added Volume	Total Volume	No. of Lanes	Lane Volume	Added Volume	Total Volume	No. of Lanes	Lane Volume
NORTHBOUND	Left	58	1	58	0	58	58	0	61	1	61	0	61	1	61	0	61	1	61
	Left-Through		0							0				0				0	
	Through	337	1	**190**	20	357	**200**	8	360	1	**202**	20	380	1	**212**	0	380	1	**212**
	Through-Right		1							1				1				1	
	Right	42	0	42	0	42	42	0	44	0	44	0	44	0	44	0	44	0	44
	Left-Through-Right		0							0				0				0	
	Left-Right		0							0				0				0	
SOUTHBOUND	Left	167	1	**167**	0	167	**167**	1	176	1	**176**	0	176	1	**176**	0	176	1	**176**
	Left-Through		0							0				0				0	
	Through	448	1	255	20	468	265	6	474	1	269	20	494	1	279	0	494	1	279
	Through-Right		1							1				1				1	
	Right	61	0	61	0	61	61	0	64	0	64	0	64	0	64	0	64	0	64
	Left-Through-Right		0							0				0				0	
	Left-Right		0							0				0				0	
EASTBOUND	Left	75	1	75	0	75	75	0	78	1	78	0	78	1	78	0	78	1	78
	Left-Through		0							0				0				0	
	Through	547	1	**296**	0	547	**296**	0	572	1	**310**	0	572	1	**310**	0	572	1	**310**
	Through-Right		1							1				1				1	
	Right	45	0	45	0	45	45	0	47	0	47	0	47	0	47	0	47	0	47
	Left-Through-Right		0							0				0				0	
	Left-Right		0							0				0				0	
WESTBOUND	Left	45	1	45	0	45	45	0	47	1	47	0	47	1	47	0	47	1	47
	Left-Through		0							0				0				0	
	Through	521	1	**318**	0	521	**318**	0	545	1	**333**	0	545	1	**333**	0	545	1	**333**
	Through-Right		1							1				1				1	
	Right	114	0	114	0	114	114	1	120	0	120	0	120	0	120	0	120	0	120
	Left-Through-Right		0							0				0				0	
	Left-Right		0							0				0				0	
CRITICAL VOLUMES		*North-South:*		357	*North-South:*		367	*North-South:*			378	*North-South:*			388	*North-South:*			388
		East-West:		614	*East-West:*		614	*East-West:*			643	*East-West:*			643	*East-West:*			643
		SUM:		971	*SUM:*		981	*SUM:*			1021	*SUM:*			1031	*SUM:*			1031
VOLUME/CAPACITY *(V/C)* RATIO:				0.706			0.713				0.743				0.750				0.750
V/C LESS ATSAC/ATCS ADJUSTMENT:				**0.606**			**0.613**				**0.643**				**0.650**				**0.650**
LEVEL OF SERVICE (LOS):				**B**			**B**				**B**				**B**				**B**

REMARKS: Alt. Route 2: Using only Boulevard Pit

Version: 1i Beta; 8/4/2011

PROJECT IMPACT

Change in *v/c* due to project:	0.007	Δ*v/c* after mitigation:	0.007
Significant impacted?	NO	Fully mitigated?	N/A

Level of Service Workheet
(Circular 212 Method)

I/S #:	North-South Street:	San Fernando Road	Year of Count:	2015	Ambient Growth: (%):	1.5	Conducted by:	City Traffic Counters	Date:	4/28/2015
CMA24	East-West Street:	Osborne Street	Projection Year:	2018	Peak Hour:	PM	Reviewed by:		Project:	Pacoima Reservoir Project/1-13-4

No. of Phases				4				4				4				4				4				4
Opposed Ø'ing: N/S-1, E/W-2 or Both-3?				2				2				2				2				2				2
Right Turns: FREE-1, NRTOR-2 or OLA-3?	NB--	0	SB--	0	NB--	0	SB--	0	NB--	0	SB--	0	NB--	0	SB--	0	NB--	0	SB--	0	NB--	0	SB--	0
	EB--	0	WB--	2	EB--	0	WB--	2	EB--	0	WB--	2	EB--	0	WB--	2	EB--	0	WB--	2	EB--	0	WB--	2
ATSAC-1 or ATSAC+ATCS-2?				2				2				2				2				2				2
Override Capacity				0				0				0				0				0				0

	MOVEMENT	EXISTING CONDITION			EXISTING PLUS PROJECT			FUTURE CONDITION W/O PROJECT				FUTURE CONDITION W/ PROJECT				FUTURE W/ PROJECT W/ MITIGATION			
		Volume	No. of Lanes	Lane Volume	Project Traffic	Total Volume	Lane Volume	Added Volume	Total Volume	No. of Lanes	Lane Volume	Added Volume	Total Volume	No. of Lanes	Lane Volume	Added Volume	Total Volume	No. of Lanes	Lane Volume
NORTHBOUND	Left	74	1	74	0	74	74	0	77	1	77	0	77	1	77	0	77	1	77
	Left-Through		0							0				0				0	
	Through	546	1	**313**	20	566	**323**	8	579	1	**331**	20	599	1	**341**	0	599	1	**341**
	Through-Right		1							1				1				1	
	Right	79	0	79	0	79	79	0	83	0	83	0	83	0	83	0	83	0	83
	Left-Through-Right		0							0				0				0	
	Left-Right		0							0				0				0	
SOUTHBOUND	Left	179	1	**179**	0	179	**179**	1	188	1	**188**	0	188	1	**188**	0	188	1	**188**
	Left-Through		0							0				0				0	
	Through	457	1	261	20	477	271	6	484	1	278	20	504	1	288	0	504	1	288
	Through-Right		1							1				1				1	
	Right	64	0	64	0	64	64	5	72	0	72	0	72	0	72	0	72	0	72
	Left-Through-Right		0							0				0				0	
	Left-Right		0							0				0				0	
EASTBOUND	Left	101	1	101	0	101	101	4	110	1	110	0	110	1	110	0	110	1	110
	Left-Through		0							0				0				0	
	Through	652	1	**348**	0	652	**348**	5	687	1	**367**	0	687	1	**367**	0	687	1	**367**
	Through-Right		1							1				1				1	
	Right	44	0	44	0	44	44	0	46	0	46	0	46	0	46	0	46	0	46
	Left-Through-Right		0							0				0				0	
	Left-Right		0							0				0				0	
WESTBOUND	Left	54	1	54	0	54	54	0	56	1	56	0	56	1	56	0	56	1	56
	Left-Through		0							0				0				0	
	Through	698	1	**418**	0	698	**418**	3	733	1	**439**	0	733	1	**439**	0	733	1	**439**
	Through-Right		1							1				1				1	
	Right	137	0	137	0	137	137	1	144	0	144	0	144	0	144	0	144	0	144
	Left-Through-Right		0							0				0				0	
	Left-Right		0							0				0				0	
CRITICAL VOLUMES		*North-South:*		492	*North-South:*		502	*North-South:*			519	*North-South:*			529	*North-South:*			529
		East-West:		766	*East-West:*		766	*East-West:*			806	*East-West:*			806	*East-West:*			806
		SUM:		1258	*SUM:*		1268	*SUM:*			1325	*SUM:*			1335	*SUM:*			1335
VOLUME/CAPACITY *(V/C)* RATIO:				0.915			0.922				0.964				0.971				0.971
V/C LESS ATSAC/ATCS ADJUSTMENT:				**0.815**			**0.822**				**0.864**				**0.871**				**0.871**
LEVEL OF SERVICE (LOS):				**D**			**D**				**D**				**D**				**D**

REMARKS: Alt. Route 2: Using only Boulevard Pit

Version: 1i Beta; 8/4/2011

PROJECT IMPACT

Change in *v/c* due to project:	0.007	Δ*v/c* after mitigation:	0.007
Significant impacted?	NO	Fully mitigated?	N/A

Level of Service Workheet
(Circular 212 Method)

I/S #:	North-South Street:	Arleta Avenue	Year of Count:	2015	Ambient Growth: (%):	1.5	Conducted by:	City Traffic Counters	Date:	4/28/2015
CMA1	East-West Street:	Devonshire Street	Projection Year:	2018	Peak Hour:	AM	Reviewed by:		Project:	Pacoima Reservoir Project/1-13-4

No. of Phases				3				3				3				3				3		
Opposed Ø'ing: N/S-1, E/W-2 or Both-3?				0				0				0				0				0		
Right Turns: FREE-1, NRTOR-2 or OLA-3?	NB--	0	SB--	3	NB--	0	SB--	3	NB--	0	SB--	3	NB--	0	SB--	3	NB--	0	SB--	3	NB--	0	SB--	3
	EB--	0	WB--	0	EB--	0	WB--	0	EB--	0	WB--	0	EB--	0	WB--	0	EB--	0	WB--	0	EB--	0	WB--	0
ATSAC-1 or ATSAC+ATCS-2?				2				2				2				2				2		
Override Capacity				0				0				0				0				0		

	MOVEMENT	EXISTING CONDITION			EXISTING PLUS PROJECT			FUTURE CONDITION W/O PROJECT				FUTURE CONDITION W/ PROJECT				FUTURE W/ PROJECT W/ MITIGATION			
		Volume	No. of Lanes	Lane Volume	Project Traffic	Total Volume	Lane Volume	Added Volume	Total Volume	No. of Lanes	Lane Volume	Added Volume	Total Volume	No. of Lanes	Lane Volume	Added Volume	Total Volume	No. of Lanes	Lane Volume
NORTHBOUND	Left	0	0	0	0	0	0	0	0	0	0	0	0	0	0	0	0	0	0
	Left-Through		0							0				0				0	
	Through	0	0	**0**	0	0	**0**	0	0	0	**0**	0	0	0	**0**	0	0	0	**0**
	Through-Right		0							0				0				0	
	Right	0	0	0	0	0	0	0	0	0	0	0	0	0	0	0	0	0	0
	Left-Through-Right		0							0				0				0	
	Left-Right		0							0				0				0	
SOUTHBOUND	Left	557	1	**318**	0	557	**335**	0	582	1	**333**	0	582	1	**349**	0	582	1	**349**
	Left-Through		0							0				0				0	
	Through	0	0	0	0	0	0	0	0	0	0	0	0	0	0	0	0	0	0
	Through-Right		0							0				0				0	
	Right	398	1	0	50	448	0	0	416	1	0	50	466	1	0	0	466	1	0
	Left-Through-Right		0							0				0				0	
	Left-Right		1							1				1				1	
EASTBOUND	Left	331	1	**331**	50	381	**381**	0	346	1	**346**	50	396	1	**396**	0	396	1	**396**
	Left-Through		0							0				0				0	
	Through	994	2	497	1	995	498	6	1045	2	523	1	1046	2	523	0	1046	2	523
	Through-Right		0							0				0				0	
	Right	0	0	0	0	0	0	0	0	0	0	0	0	0	0	0	0	0	0
	Left-Through-Right		0							0				0				0	
	Left-Right		0							0				0				0	
WESTBOUND	Left	0	0	0	0	0	0	0	0	0	0	0	0	0	0	0	0	0	0
	Left-Through		0							0				0				0	
	Through	592	2	**296**	1	593	**297**	6	625	2	**313**	1	626	2	**313**	0	626	2	**313**
	Through-Right		0							0				0				0	
	Right	260	1	101	0	260	93	0	272	1	106	0	272	1	98	0	272	1	98
	Left-Through-Right		0							0				0				0	
	Left-Right		0							0				0				0	
CRITICAL VOLUMES		North-South:		318	North-South:		335	North-South:			333	North-South:			349	North-South:			349
		East-West:		627	East-West:		678	East-West:			659	East-West:			709	East-West:			709
		SUM:		945	SUM:		1013	SUM:			992	SUM:			1058	SUM:			1058
VOLUME/CAPACITY (V/C) RATIO:				0.663			0.711				0.696				0.742				0.742
V/C LESS ATSAC/ATCS ADJUSTMENT:				**0.563**			**0.611**				**0.596**				**0.642**				**0.642**
LEVEL OF SERVICE (LOS):				**A**			**B**				**A**				**B**				**B**

REMARKS: Alt. Route 3: Using only Sheldon Pit

Version: 1i Beta; 8/4/2011

PROJECT IMPACT

Change in *v/c* due to project:	0.046	Δ*v/c* after mitigation:	0.046
Significant impacted?	NO	Fully mitigated?	N/A

Level of Service Workheet
(Circular 212 Method)

I/S #:	North-South Street:	Arleta Avenue	Year of Count:	2015	Ambient Growth: (%):	1.5	Conducted by:	City Traffic Counters	Date:	4/28/2015
CMA1	East-West Street:	Devonshire Street	Projection Year:	2018	Peak Hour:	Mid-Day	Reviewed by:		Project:	Pacoima Reservoir Project/1-13-4

No. of Phases			3			3			3			3			3			3
Opposed Ø'ing: N/S-1, E/W-2 or Both-3?			0			0			0			0			0			0
Right Turns: FREE-1, NRTOR-2 or OLA-3?	NB-- 0	SB--	3	NB-- 0	SB--	3	NB-- 0	SB--	3	NB-- 0	SB--	3	NB-- 0	SB--	3	NB-- 0	SB--	3
	EB-- 0	WB--	0	EB-- 0	WB--	0	EB-- 0	WB--	0	EB-- 0	WB--	0	EB-- 0	WB--	0	EB-- 0	WB--	0
ATSAC-1 or ATSAC+ATCS-2?			2			2			2			2			2			2
Override Capacity			0			0			0			0			0			0

	MOVEMENT	EXISTING CONDITION			EXISTING PLUS PROJECT			FUTURE CONDITION W/O PROJECT				FUTURE CONDITION W/ PROJECT				FUTURE W/ PROJECT W/ MITIGATION			
		Volume	No. of Lanes	Lane Volume	Project Traffic	Total Volume	Lane Volume	Added Volume	Total Volume	No. of Lanes	Lane Volume	Added Volume	Total Volume	No. of Lanes	Lane Volume	Added Volume	Total Volume	No. of Lanes	Lane Volume
NORTHBOUND	Left	0	0	0	0	0	0	0	0	0	0	0	0	0	0	0	0	0	0
	Left-Through		0							0				0				0	
	Through	0	0	**0**	0	0	**0**	0	0	0	**0**	0	0	0	**0**	0	0	0	**0**
	Through-Right		0							0				0				0	
	Right	0	0	0	0	0	0	0	0	0	0	0	0	0	0	0	0	0	0
	Left-Through-Right		0							0				0				0	
	Left-Right		0							0				0				0	
SOUTHBOUND	Left	98	1	**98**	0	98	**98**	0	102	1	**102**	0	102	1	**102**	0	102	1	**102**
	Left-Through		0							0				0				0	
	Through	0	0	0	0	0	0	0	0	0	0	0	0	0	0	0	0	0	0
	Through-Right		0							0				0				0	
	Right	220	1	0	50	270	0	0	230	1	0	50	280	1	0	0	280	1	0
	Left-Through-Right		0							0				0				0	
	Left-Right		1							1				1				1	
EASTBOUND	Left	224	1	**224**	50	274	**274**	0	234	1	**234**	50	284	1	**284**	0	284	1	**284**
	Left-Through		0							0				0				0	
	Through	293	2	147	1	294	147	3	309	2	155	1	310	2	155	0	310	2	155
	Through-Right		0							0				0				0	
	Right	2	0	0	0	2	0	0	2	0	0	0	2	0	0	0	2	0	0
	Left-Through-Right		0							0				0				0	
	Left-Right		0							0				0				0	
WESTBOUND	Left	0	0	0	0	0	0	0	0	0	0	0	0	0	0	0	0	0	0
	Left-Through		0							0				0				0	
	Through	302	2	**151**	1	303	**152**	3	319	2	**160**	1	320	2	**160**	0	320	2	**160**
	Through-Right		0							0				0				0	
	Right	142	1	93	0	142	93	0	148	1	97	0	148	1	97	0	148	1	97
	Left-Through-Right		0							0				0				0	
	Left-Right		0							0				0				0	
CRITICAL VOLUMES		*North-South:*		98	*North-South:*		98	*North-South:*			102	*North-South:*			102	*North-South:*			102
		East-West:		375	*East-West:*		426	*East-West:*			394	*East-West:*			444	*East-West:*			444
		SUM:		473	*SUM:*		524	*SUM:*			496	*SUM:*			546	*SUM:*			546
VOLUME/CAPACITY *(V/C)* RATIO:				0.332			0.368				0.348				0.383				0.383
V/C LESS ATSAC/ATCS ADJUSTMENT:				**0.232**			**0.268**				**0.248**				**0.283**				**0.283**
LEVEL OF SERVICE (LOS):				**A**			**A**				**A**				**A**				**A**

REMARKS: Alt. Route 3: Using only Sheldon Pit

Version: 1i Beta; 8/4/2011

PROJECT IMPACT

Change in *v/c* due to project:	0.035	Δ*v/c* after mitigation:	0.035
Significant impacted?	NO	Fully mitigated?	N/A

Level of Service Workheet
(Circular 212 Method)

I/S #:	North-South Street:	Arleta Avenue	Year of Count:	2015	Ambient Growth: (%):	1.5	Conducted by:	City Traffic Counters	Date:	4/28/2015
CMA1	East-West Street:	Devonshire Street	Projection Year:	2018	Peak Hour:	PM	Reviewed by:		Project:	Pacoima Reservoir Project/1-13-4

No. of Phases			3			3			3			3			3			3
Opposed Ø'ing: N/S-1, E/W-2 or Both-3?			0			0			0			0			0			0
Right Turns: FREE-1, NRTOR-2 or OLA-3?	NB-- 0	SB--	3	NB-- 0	SB--	3	NB-- 0	SB--	3	NB-- 0	SB--	3	NB-- 0	SB--	3	NB-- 0	SB--	3
	EB-- 0	WB--	0	EB-- 0	WB--	0	EB-- 0	WB--	0	EB-- 0	WB--	0	EB-- 0	WB--	0	EB-- 0	WB--	0
ATSAC-1 or ATSAC+ATCS-2?			2			2			2			2			2			2
Override Capacity			0			0			0			0			0			0

MOVEMENT		EXISTING CONDITION			EXISTING PLUS PROJECT			FUTURE CONDITION W/O PROJECT				FUTURE CONDITION W/ PROJECT				FUTURE W/ PROJECT W/ MITIGATION			
		Volume	No. of Lanes	Lane Volume	Project Traffic	Total Volume	Lane Volume	Added Volume	Total Volume	No. of Lanes	Lane Volume	Added Volume	Total Volume	No. of Lanes	Lane Volume	Added Volume	Total Volume	No. of Lanes	Lane Volume
NORTHBOUND	Left	0	0	0	0	0	0	0	0	0	0	0	0	0	0	0	0	0	0
	Left-Through		0							0				0				0	
	Through	0	0	**0**	0	0	**0**	0	0	0	**0**	0	0	0	**0**	0	0	0	**0**
	Through-Right		0							0				0				0	
	Right	0	0	0	0	0	0	0	0	0	0	0	0	0	0	0	0	0	0
	Left-Through-Right		0							0				0				0	
	Left-Right		0							0				0				0	
SOUTHBOUND	Left	216	1	**162**	0	216	**179**	0	226	1	**170**	0	226	1	**186**	0	226	1	**186**
	Left-Through		0							0				0				0	
	Through	0	0	0	0	0	0	0	0	0	0	0	0	0	0	0	0	0	0
	Through-Right		0							0				0				0	
	Right	271	1	0	50	321	0	0	283	1	0	50	333	1	0	0	333	1	0
	Left-Through-Right		0							0				0				0	
	Left-Right		1							1				1				1	
EASTBOUND	Left	420	1	**420**	50	470	**470**	0	439	1	**439**	50	489	1	**489**	0	489	1	**489**
	Left-Through		0							0				0				0	
	Through	498	2	249	1	499	250	4	525	2	263	1	526	2	263	0	526	2	263
	Through-Right		0							0				0				0	
	Right	0	0	0	0	0	0	0	0	0	0	0	0	0	0	0	0	0	0
	Left-Through-Right		0							0				0				0	
	Left-Right		0							0				0				0	
WESTBOUND	Left	0	0	0	0	0	0	0	0	0	0	0	0	0	0	0	0	0	0
	Left-Through		0							0				0				0	
	Through	436	2	218	1	437	219	5	461	2	231	1	462	2	231	0	462	2	231
	Through-Right		0							0				0				0	
	Right	350	1	**269**	0	350	**261**	0	366	1	**281**	0	366	1	**273**	0	366	1	**273**
	Left-Through-Right		0							0				0				0	
	Left-Right		0							0				0				0	
CRITICAL VOLUMES		*North-South:*		162	*North-South:*		179	*North-South:*			170	*North-South:*			186	*North-South:*			186
		East-West:		689	*East-West:*		731	*East-West:*			720	*East-West:*			762	*East-West:*			762
		SUM:		851	*SUM:*		910	*SUM:*			890	*SUM:*			948	*SUM:*			948
VOLUME/CAPACITY *(V/C)* RATIO:				0.597			0.639				0.625				0.665				0.665
V/C LESS ATSAC/ATCS ADJUSTMENT:				**0.497**			**0.539**				**0.525**				**0.565**				**0.565**
LEVEL OF SERVICE (LOS):				**A**			**A**				**A**				**A**				**A**

REMARKS: Alt. Route 3: Using only Sheldon Pit

Version: 1i Beta; 8/4/2011

PROJECT IMPACT

Change in *v/c* due to project:	0.040	Δ*v/c* after mitigation:	0.040
Significant impacted?	NO	Fully mitigated?	N/A

Level of Service Workheet
(Circular 212 Method)

I/S #:	North-South Street:	Arleta Avenue	Year of Count:	2015	Ambient Growth: (%):	1.5	Conducted by:	City Traffic Counters	Date:	8/13/2015
CMA2	East-West Street:	Paxton Street	Projection Year:	2018	Peak Hour:	AM	Reviewed by:		Project:	Pacoima Reservoir Project/1-13-4

No. of Phases				0				0				0				0				0			
Opposed Ø'ing: N/S-1, E/W-2 or Both-3?				0				0				0				0				0			
Right Turns: FREE-1, NRTOR-2 or OLA-3?	NB--	0	SB--	0	NB--	0	SB--	0	NB--	0	SB--	0	NB--	0	SB--	0	NB--	0	SB--	0	NB--	0	SB--	0
	EB--	0	WB--	0	EB--	0	WB--	0	EB--	0	WB--	0	EB--	0	WB--	0	EB--	0	WB--	0	EB--	0	WB--	0
ATSAC-1 or ATSAC+ATCS-2?				0				0				0				0				0			
Override Capacity				1425				1425				1425				1425				1425			

MOVEMENT		EXISTING CONDITION			EXISTING PLUS PROJECT			FUTURE CONDITION W/O PROJECT				FUTURE CONDITION W/ PROJECT				FUTURE W/ PROJECT W/ MITIGATION			
		Volume	No. of Lanes	Lane Volume	Project Traffic	Total Volume	Lane Volume	Added Volume	Total Volume	No. of Lanes	Lane Volume	Added Volume	Total Volume	No. of Lanes	Lane Volume	Added Volume	Total Volume	No. of Lanes	Lane Volume
NORTHBOUND	Left	0	0	0	0	0	0	0	0	0	0	0	0	0	0	0	0	0	0
	Left-Through		0							0				0				0	
	Through	86	1	86	0	86	86	0	90	1	90	0	90	1	90	0	90	1	90
	Through-Right		1							1				1				1	
	Right	516	0	**332**	50	566	**368**	0	540	0	**347**	50	590	0	**383**	0	590	0	**383**
	Left-Through-Right		0							0				0				0	
	Left-Right		0							0				0				0	
SOUTHBOUND	Left	177	1	**177**	0	177	**177**	2	187	1	**187**	0	187	1	**187**	0	187	1	**187**
	Left-Through		0							0				0				0	
	Through	231	2	116	0	231	116	0	242	2	121	0	242	2	121	0	242	2	121
	Through-Right		0							0				0				0	
	Right	0	0	0	0	0	0	0	0	0	0	0	0	0	0	0	0	0	0
	Left-Through-Right		0							0				0				0	
	Left-Right		0							0				0				0	
EASTBOUND	Left	0	0	0	0	0	0	0	0	0	0	0	0	0	0	0	0	0	0
	Left-Through		0							0				0				0	
	Through	0	0	**0**	0	0	**0**	0	0	0	**0**	0	0	0	**0**	0	0	0	**0**
	Through-Right		0							0				0				0	
	Right	0	0	0	0	0	0	0	0	0	0	0	0	0	0	0	0	0	0
	Left-Through-Right		0							0				0				0	
	Left-Right		0							0				0				0	
WESTBOUND	Left	671	2	**369**	50	721	**397**	0	702	2	**386**	50	752	2	**414**	0	752	2	**414**
	Left-Through		0							0				0				0	
	Through	0	0	0	0	0	0	0	0	0	0	0	0	0	0	0	0	0	0
	Through-Right		0							0				0				0	
	Right	82	1	0	0	82	0	3	89	1	0	0	89	1	0	0	89	1	0
	Left-Through-Right		0							0				0				0	
	Left-Right		0							0				0				0	
CRITICAL VOLUMES			*North-South:*	509		*North-South:*	545		*North-South:*	534			*North-South:*	570			*North-South:*	570	
			East-West:	369		*East-West:*	397		*East-West:*	386			*East-West:*	414			*East-West:*	414	
			SUM:	878		*SUM:*	942		*SUM:*	920			*SUM:*	984			*SUM:*	984	
VOLUME/CAPACITY *(V/C)* RATIO:				0.616			0.661			0.646				0.691				0.691	
V/C LESS ATSAC/ATCS ADJUSTMENT:				0.616			0.661			0.646				0.691				0.691	
LEVEL OF SERVICE (LOS):				**B**			**B**			**B**				**B**				**B**	

REMARKS: Alt. Route 3: Using only Sheldon Pit. Based on field observations, over 1,750 vehicles currently traverse through the intersection during the peak hour. Fewer turning movements occur at the intersection due to the "T" intersection configuration. In addition, two primary movements which are complementary (i.e., NBRT/WBLT) occur during peak hours and are non-conflicting moves. A capacity of 1,425 vph is therefore utilized.

Version: 1i Beta; 8/4/2011

PROJECT IMPACT

Change in *v/c* due to project:	0.045	**Δ*v/c* after mitigation:**	0.045
Significant impacted?	NO	**Fully mitigated?**	N/A

Level of Service Workheet
(Circular 212 Method)

I/S #:	North-South Street:	Arleta Avenue	Year of Count:	2015	Ambient Growth: (%):	1.5	Conducted by:	City Traffic Counters	Date:	8/13/2015
CMA2	East-West Street:	Paxton Street	Projection Year:	2018	Peak Hour:	Mid-Day	Reviewed by:		Project:	Pacoima Reservoir Project/1-13-4

No. of Phases				0				0				0				0				0	
Opposed Ø'ing: N/S-1, E/W-2 or Both-3?				0				0				0				0				0	
Right Turns: FREE-1, NRTOR-2 or OLA-3?	NB--	0	SB--	0	NB--	0	SB--	0	NB--	0	SB--	0	NB--	0	SB--	0	NB--	0	SB--	0	
	EB--	0	WB--	0	EB--	0	WB--	0	EB--	0	WB--	0	EB--	0	WB--	0	EB--	0	WB--	0	
ATSAC-1 or ATSAC+ATCS-2?				0				0				0				0				0	
Override Capacity				1425				1425				1425				1425				1425	

	MOVEMENT	EXISTING CONDITION			EXISTING PLUS PROJECT			FUTURE CONDITION W/O PROJECT				FUTURE CONDITION W/ PROJECT				FUTURE W/ PROJECT W/ MITIGATION			
		Volume	No. of Lanes	Lane Volume	Project Traffic	Total Volume	Lane Volume	Added Volume	Total Volume	No. of Lanes	Lane Volume	Added Volume	Total Volume	No. of Lanes	Lane Volume	Added Volume	Total Volume	No. of Lanes	Lane Volume
NORTHBOUND	Left	0	0	0	0	0	0	0	0	0	0	0	0	0	0	0	0	0	0
	Left-Through		0							0				0				0	
	Through	50	1	50	0	50	50	0	52	1	52	0	52	1	52	0	52	1	52
	Through-Right		1							1				1				1	
	Right	309	0	**235**	50	359	**271**	0	323	0	**245**	50	373	0	**282**	0	373	0	**282**
	Left-Through-Right		0							0				0				0	
	Left-Right		0							0				0				0	
SOUTHBOUND	Left	82	1	**82**	0	82	**82**	3	89	1	**89**	0	89	1	**89**	0	89	1	**89**
	Left-Through		0							0				0				0	
	Through	44	2	22	0	44	22	0	46	2	23	0	46	2	23	0	46	2	23
	Through-Right		0							0				0				0	
	Right	0	0	0	0	0	0	0	0	0	0	0	0	0	0	0	0	0	0
	Left-Through-Right		0							0				0				0	
	Left-Right		0							0				0				0	
EASTBOUND	Left	0	0	0	0	0	0	0	0	0	0	0	0	0	0	0	0	0	0
	Left-Through		0							0				0				0	
	Through	0	0	**0**	0	0	**0**	0	0	0	**0**	0	0	0	**0**	0	0	0	**0**
	Through-Right		0							0				0				0	
	Right	0	0	0	0	0	0	0	0	0	0	0	0	0	0	0	0	0	0
	Left-Through-Right		0							0				0				0	
	Left-Right		0							0				0				0	
WESTBOUND	Left	271	2	**149**	50	321	**177**	0	283	2	**156**	50	333	2	**183**	0	333	2	**183**
	Left-Through		0							0				0				0	
	Through	0	0	0	0	0	0	0	0	0	0	0	0	0	0	0	0	0	0
	Through-Right		0							0				0				0	
	Right	108	1	67	0	108	67	3	116	1	72	0	116	1	72	0	116	1	72
	Left-Through-Right		0							0				0				0	
	Left-Right		0							0				0				0	
CRITICAL VOLUMES		North-South:		317	North-South:		353	North-South:			334	North-South:			371	North-South:			371
		East-West:		149	East-West:		177	East-West:			156	East-West:			183	East-West:			183
		SUM:		466	SUM:		530	SUM:			490	SUM:			554	SUM:			554
VOLUME/CAPACITY (V/C) RATIO:				0.327			0.372				0.344				0.389				0.389
V/C LESS ATSAC/ATCS ADJUSTMENT:				0.327			0.372				0.344				0.389				0.389
LEVEL OF SERVICE (LOS):				A			A				A				A				A

REMARKS: Alt. Route 3: Using only Sheldon Pit. Based on field observations, over 1,750 vehicles currently traverse through the intersection during the peak hour. Fewer turning movements occur at the intersection due to the "T" intersection configuration. In addition, two primary movements which are complementary (i.e., NBRT/WBLT) occur during peak hours and are non-conflicting moves. A capacity of 1,425 vph is therefore utilized.

Version: 1i Beta; 8/4/2011

PROJECT IMPACT

Change in *v/c* due to project:	0.045	Δ*v/c* after mitigation:	0.045
Significant impacted?	NO	Fully mitigated?	N/A

Level of Service Workheet
(Circular 212 Method)

I/S #:	North-South Street:	Arleta Avenue	Year of Count:	2015	Ambient Growth: (%):	1.5	Conducted by:	City Traffic Counters	Date:	8/13/2015
CMA2	East-West Street:	Paxton Street	Projection Year:	2018	Peak Hour:	PM	Reviewed by:		Project:	Pacoima Reservoir Project/1-13-4

No. of Phases				0				0				0				0				0	
Opposed Ø'ing: N/S-1, E/W-2 or Both-3?				0				0				0				0				0	
Right Turns: FREE-1, NRTOR-2 or OLA-3?	NB--	0	SB--	0	NB--	0	SB--	0	NB--	0	SB--	0	NB--	0	SB--	0	NB--	0	SB--	0	
	EB--	0	WB--	0	EB--	0	WB--	0	EB--	0	WB--	0	EB--	0	WB--	0	EB--	0	WB--	0	
ATSAC-1 or ATSAC+ATCS-2?				0				0				0				0				0	
Override Capacity				1425				1425				1425				1425				1425	

	MOVEMENT	EXISTING CONDITION			EXISTING PLUS PROJECT			FUTURE CONDITION W/O PROJECT				FUTURE CONDITION W/ PROJECT				FUTURE W/ PROJECT W/ MITIGATION			
		Volume	No. of Lanes	Lane Volume	Project Traffic	Total Volume	Lane Volume	Added Volume	Total Volume	No. of Lanes	Lane Volume	Added Volume	Total Volume	No. of Lanes	Lane Volume	Added Volume	Total Volume	No. of Lanes	Lane Volume
NORTHBOUND	Left	0	0	0	0	0	0	0	0	0	0	0	0	0	0	0	0	0	0
	Left-Through		0							0				0				0	
	Through	132	1	132	0	132	132	0	138	1	138	0	138	1	138	0	138	1	138
	Through-Right		1							1				1				1	
	Right	644	0	**524**	50	694	**560**	0	673	0	**548**	50	723	0	**584**	0	723	0	**584**
	Left-Through-Right		0							0				0				0	
	Left-Right		0							0				0				0	
SOUTHBOUND	Left	85	1	**85**	0	85	**85**	3	92	1	**92**	0	92	1	**92**	0	92	1	**92**
	Left-Through		0							0				0				0	
	Through	70	2	35	0	70	35	0	73	2	37	0	73	2	37	0	73	2	37
	Through-Right		0							0				0				0	
	Right	0	0	0	0	0	0	0	0	0	0	0	0	0	0	0	0	0	0
	Left-Through-Right		0							0				0				0	
	Left-Right		0							0				0				0	
EASTBOUND	Left	0	0	0	0	0	0	0	0	0	0	0	0	0	0	0	0	0	0
	Left-Through		0							0				0				0	
	Through	0	0	**0**	0	0	**0**	0	0	0	**0**	0	0	0	**0**	0	0	0	**0**
	Through-Right		0							0				0				0	
	Right	0	0	0	0	0	0	0	0	0	0	0	0	0	0	0	0	0	0
	Left-Through-Right		0							0				0				0	
	Left-Right		0							0				0				0	
WESTBOUND	Left	437	2	**240**	50	487	**268**	0	457	2	**251**	50	507	2	**279**	0	507	2	**279**
	Left-Through		0							0				0				0	
	Through	0	0	0	0	0	0	0	0	0	0	0	0	0	0	0	0	0	0
	Through-Right		0							0				0				0	
	Right	105	1	63	0	105	63	3	113	1	67	0	113	1	67	0	113	1	67
	Left-Through-Right		0							0				0				0	
	Left-Right		0							0				0				0	
CRITICAL VOLUMES			*North-South:*	609		*North-South:*	645		*North-South:*	640			*North-South:*	676			*North-South:*	676	
			East-West:	240		*East-West:*	268		*East-West:*	251			*East-West:*	279			*East-West:*	279	
			SUM:	849		*SUM:*	913		*SUM:*	891			*SUM:*	955			*SUM:*	955	
VOLUME/CAPACITY *(V/C)* RATIO:				0.596			0.641			0.625				0.670				0.670	
V/C LESS ATSAC/ATCS ADJUSTMENT:				0.596			0.641			0.625				0.670				0.670	
LEVEL OF SERVICE (LOS):				**A**			**B**			**B**				**B**				**B**	

REMARKS: Alt. Route 3: Using only Sheldon Pit. Based on field observations, over 1,750 vehicles currently traverse through the intersection during the peak hour. Fewer turning movements occur at the intersection due to the "T" intersection configuration. In addition, two primary movements which are complementary (i.e., NBRT/WBLT) occur during peak hours and are non-conflicting moves. A capacity of 1,425 vph is therefore utilized.

Version: 1i Beta; 8/4/2011

PROJECT IMPACT

Change in *v/c* due to project:	0.045	**Δ*v/c* after mitigation:**	0.045
Significant impacted?	NO	**Fully mitigated?**	N/A

Level of Service Workheet
(Circular 212 Method)

I/S #:	North-South Street:	I-5 Freeway SB Ramps	Year of Count:	2015	Ambient Growth: (%):	1.5	Conducted by:	City Traffic Counters	Date:	4/28/2015
CMA3	East-West Street:	Paxton Street	Projection Year:	2018	Peak Hour:	AM	Reviewed by:		Project:	Pacoima Reservoir Project/1-13-4

	EXISTING CONDITION			EXISTING PLUS PROJECT			FUTURE CONDITION W/O PROJECT				FUTURE CONDITION W/ PROJECT				FUTURE W/ PROJECT W/ MITIGATION			
No. of Phases			0			0				0				0				0
Opposed Ø'ing: N/S-1, E/W-2 or Both-3?			0			0				0				0				0
Right Turns: FREE-1, NRTOR-2 or OLA-3?	NB-- 0	SB--	0	NB-- 0	SB--	0	NB-- 0	SB--	0		NB-- 0	SB--	0		NB-- 0	SB--	0	
	EB-- 0	WB--	0	EB-- 0	WB--	0	EB-- 0	WB--	0		EB-- 0	WB--	0		EB-- 0	WB--	0	
ATSAC-1 or ATSAC+ATCS-2?			0			0				0				0				0
Override Capacity			1200			1200				1200				1200				1200

	MOVEMENT	EXISTING CONDITION Volume	No. of Lanes	Lane Volume	EXISTING PLUS PROJECT Project Traffic	Total Volume	Lane Volume	FUTURE CONDITION W/O PROJECT Added Volume	Total Volume	No. of Lanes	Lane Volume	FUTURE CONDITION W/ PROJECT Added Volume	Total Volume	No. of Lanes	Lane Volume	FUTURE W/ PROJECT W/ MITIGATION Added Volume	Total Volume	No. of Lanes	Lane Volume
NORTHBOUND	Left	2	0	**2**	0	2	**2**	0	2	0	**2**	0	2	0	**2**	0	2	0	**2**
	Left-Through		0							0				0				0	
	Through	2	0	103	0	2	103	0	2	0	111	0	2	0	111	0	2	0	111
	Through-Right		0							0				0				0	
	Right	99	0	0	0	99	0	3	107	0	0	0	107	0	0	0	107	0	0
	Left-Through-Right		1							1				1				1	
	Left-Right		0							0				0				0	
SOUTHBOUND	Left	124	0	124	0	124	124	1	131	0	131	0	131	0	131	0	131	0	131
	Left-Through		1							1				1				1	
	Through	11	0	135	0	11	135	0	12	0	143	0	12	0	143	0	12	0	143
	Through-Right		0							0				0				0	
	Right	373	1	**280**	0	373	**265**	1	391	1	**294**	0	391	1	**279**	0	391	1	**279**
	Left-Through-Right		0							0				0				0	
	Left-Right		0							0				0				0	
EASTBOUND	Left	186	1	**186**	30	216	**216**	1	195	1	**195**	30	225	1	**225**	0	225	1	**225**
	Left-Through		0							0				0				0	
	Through	526	1	264	20	546	274	2	552	1	277	20	572	1	287	0	572	1	287
	Through-Right		1							1				1				1	
	Right	1	0	1	0	1	1	0	1	0	1	0	1	0	1	0	1	0	1
	Left-Through-Right		0							0				0				0	
	Left-Right		0							0				0				0	
WESTBOUND	Left	35	1	35	0	35	35	3	40	1	40	0	40	1	40	0	40	1	40
	Left-Through		0							0				0				0	
	Through	363	1	**317**	50	413	**342**	2	382	1	**333**	50	432	1	**358**	0	432	1	**358**
	Through-Right		1							1				1				1	
	Right	270	0	270	0	270	270	1	283	0	283	0	283	0	283	0	283	0	283
	Left-Through-Right		0							0				0				0	
	Left-Right		0							0				0				0	
CRITICAL VOLUMES		*North-South:*	282	*North-South:*		267	*North-South:*			296	*North-South:*			281	*North-South:*			281
		East-West:	503	*East-West:*		558	*East-West:*			528	*East-West:*			583	*East-West:*			583
		SUM:	785	*SUM:*		825	*SUM:*			824	*SUM:*			864	*SUM:*			864
VOLUME/CAPACITY *(V/C)* RATIO:			0.654			0.688				0.687				0.720				0.720
V/C LESS ATSAC/ATCS ADJUSTMENT:			0.654			0.688				0.687				0.720				0.720
LEVEL OF SERVICE (LOS):			**B**			**B**				**B**				**C**				**C**

REMARKS: Alt. Route 3: Using only Sheldon Pit

Version: 1i Beta; 8/4/2011

PROJECT IMPACT

Change in *v/c* due to project:	0.033	Δ*v/c* after mitigation:	0.033
Significant impacted?	NO	Fully mitigated?	N/A

Level of Service Workheet
(Circular 212 Method)

I/S #:	North-South Street:	I-5 Freeway SB Ramps	Year of Count:	2015	Ambient Growth: (%):	1.5	Conducted by:	City Traffic Counters	Date:	4/28/2015
CMA3	East-West Street:	Paxton Street	Projection Year:	2018	Peak Hour:	Mid-Day	Reviewed by:		Project:	Pacoima Reservoir Project/1-13-4

No. of Phases				0				0				0				0				0			
Opposed Ø'ing: N/S-1, E/W-2 or Both-3?				0				0				0				0				0			
Right Turns: FREE-1, NRTOR-2 or OLA-3?	NB--	0	SB--	0	NB--	0	SB--	0	NB--	0	SB--	0	NB--	0	SB--	0	NB--	0	SB--	0			
	EB--	0	WB--	0	EB--	0	WB--	0	EB--	0	WB--	0	EB--	0	WB--	0	EB--	0	WB--	0			
ATSAC-1 or ATSAC+ATCS-2?				0				0				0				0				0			
Override Capacity				1200				1200				1200				1200				1200			

MOVEMENT		EXISTING CONDITION			EXISTING PLUS PROJECT			FUTURE CONDITION W/O PROJECT				FUTURE CONDITION W/ PROJECT				FUTURE W/ PROJECT W/ MITIGATION			
		Volume	No. of Lanes	Lane Volume	Project Traffic	Total Volume	Lane Volume	Added Volume	Total Volume	No. of Lanes	Lane Volume	Added Volume	Total Volume	No. of Lanes	Lane Volume	Added Volume	Total Volume	No. of Lanes	Lane Volume
NORTHBOUND	Left	0	0	0	0	0	0	0	0	0	0	0	0	0	0	0	0	0	0
	Left-Through		0							0				0				0	
	Through	1	0	**37**	0	1	**37**	0	1	0	**39**	0	1	0	**39**	0	1	0	**39**
	Through-Right		0							0				0				0	
	Right	36	0	0	0	36	0	0	38	0	0	0	38	0	0	0	38	0	0
	Left-Through-Right		1							1				1				1	
	Left-Right		0							0				0				0	
SOUTHBOUND	Left	66	0	**66**	0	66	**66**	1	70	0	**70**	0	70	0	**70**	0	70	0	**70**
	Left-Through		1							1				1				1	
	Through	7	0	73	0	7	73	0	7	0	77	0	7	0	77	0	7	0	77
	Through-Right		0							0				0				0	
	Right	33	1	5	0	33	0	1	36	1	6	0	36	1	0	0	36	1	0
	Left-Through-Right		0							0				0				0	
	Left-Right		0							0				0				0	
EASTBOUND	Left	56	1	**56**	30	86	**86**	1	60	1	**60**	30	90	1	**90**	0	90	1	**90**
	Left-Through		0							0				0				0	
	Through	348	1	175	20	368	185	2	366	1	184	20	386	1	194	0	386	1	194
	Through-Right		1							1				1				1	
	Right	2	0	2	0	2	2	0	2	0	2	0	2	0	2	0	2	0	2
	Left-Through-Right		0							0				0				0	
	Left-Right		0							0				0				0	
WESTBOUND	Left	35	1	35	0	35	35	0	37	1	37	0	37	1	37	0	37	1	37
	Left-Through		0							0				0				0	
	Through	351	1	**209**	50	401	**234**	2	369	1	**220**	50	419	1	**245**	0	419	1	**245**
	Through-Right		1							1				1				1	
	Right	67	0	67	0	67	67	1	71	0	71	0	71	0	71	0	71	0	71
	Left-Through-Right		0							0				0				0	
	Left-Right		0							0				0				0	
CRITICAL VOLUMES		*North-South:*		103	*North-South:*		103	*North-South:*			109	*North-South:*			109	*North-South:*			109
		East-West:		265	*East-West:*		320	*East-West:*			280	*East-West:*			335	*East-West:*			335
		SUM:		368	*SUM:*		423	*SUM:*			389	*SUM:*			444	*SUM:*			444
VOLUME/CAPACITY *(V/C)* RATIO:				0.307			0.353				0.324				0.370				0.370
V/C LESS ATSAC/ATCS ADJUSTMENT:				0.307			0.353				0.324				0.370				0.370
LEVEL OF SERVICE (LOS):				A			A				A				A				A

REMARKS: Alt. Route 3: Using only Sheldon Pit

Version: 1i Beta; 8/4/2011

PROJECT IMPACT

Change in *v/c* due to project:	0.046	Δ*v/c* after mitigation:	0.046
Significant impacted?	NO	Fully mitigated?	N/A

Level of Service Workheet
(Circular 212 Method)

I/S #:	North-South Street:	I-5 Freeway SB Ramps	Year of Count:	2015	Ambient Growth: (%):	1.5	Conducted by:	City Traffic Counters	Date:	4/28/2015
CMA3	East-West Street:	Paxton Street	Projection Year:	2018	Peak Hour:	PM	Reviewed by:		Project:	Pacoima Reservoir Project/1-13-4

No. of Phases				0				0				0				0				0			0
Opposed Ø'ing: N/S-1, E/W-2 or Both-3?				0				0				0				0				0			0
Right Turns: FREE-1, NRTOR-2 or OLA-3?	NB--	0	SB--	0	NB--	0	SB--	0	NB--	0	SB--	0	NB--	0	SB--	0	NB--	0	SB--	0	NB--	0	SB--	0
	EB--	0	WB--	0	EB--	0	WB--	0	EB--	0	WB--	0	EB--	0	WB--	0	EB--	0	WB--	0	EB--	0	WB--	0
ATSAC-1 or ATSAC+ATCS-2?				0				0				0				0				0				0
Override Capacity				1200				1200				1200				1200				1200				1200

MOVEMENT		EXISTING CONDITION			EXISTING PLUS PROJECT			FUTURE CONDITION W/O PROJECT				FUTURE CONDITION W/ PROJECT				FUTURE W/ PROJECT W/ MITIGATION			
		Volume	No. of Lanes	Lane Volume	Project Traffic	Total Volume	Lane Volume	Added Volume	Total Volume	No. of Lanes	Lane Volume	Added Volume	Total Volume	No. of Lanes	Lane Volume	Added Volume	Total Volume	No. of Lanes	Lane Volume
NORTHBOUND	Left	1	0	1	0	1	1	0	1	0	1	0	1	0	1	0	1	0	1
	Left-Through		0							0				0				0	
	Through	2	0	**61**	0	2	**61**	0	2	0	**66**	0	2	0	**66**	0	2	0	**66**
	Through-Right		0							0				0				0	
	Right	58	0	0	0	58	0	2	63	0	0	0	63	0	0	0	63	0	0
	Left-Through-Right		1							1				1				1	
	Left-Right		0							0				0				0	
SOUTHBOUND	Left	145	0	**145**	0	145	**145**	1	153	0	**153**	0	153	0	**153**	0	153	0	**153**
	Left-Through		1							1				1				1	
	Through	14	0	159	0	14	159	0	15	0	168	0	15	0	168	0	15	0	168
	Through-Right		0							0				0				0	
	Right	117	1	88	0	117	73	1	123	1	92	0	123	1	77	0	123	1	77
	Left-Through-Right		0							0				0				0	
	Left-Right		0							0				0				0	
EASTBOUND	Left	58	1	58	30	88	88	1	62	1	62	30	92	1	92	0	92	1	92
	Left-Through		0							0				0				0	
	Through	672	1	**340**	20	692	**350**	2	705	1	**357**	20	725	1	**367**	0	725	1	**367**
	Through-Right		1							1				1				1	
	Right	8	0	8	0	8	8	0	8	0	8	0	8	0	8	0	8	0	8
	Left-Through-Right		0							0				0				0	
	Left-Right		0							0				0				0	
WESTBOUND	Left	71	1	**71**	0	71	**71**	2	76	1	**76**	0	76	1	**76**	0	76	1	**76**
	Left-Through		0							0				0				0	
	Through	409	1	245	50	459	270	2	430	1	258	50	480	1	283	0	480	1	283
	Through-Right		1							1				1				1	
	Right	81	0	81	0	81	81	1	86	0	86	0	86	0	86	0	86	0	86
	Left-Through-Right		0							0				0				0	
	Left-Right		0							0				0				0	
CRITICAL VOLUMES		*North-South:*		206	*North-South:*		206	*North-South:*			219	*North-South:*			219	*North-South:*			219
		East-West:		411	*East-West:*		421	*East-West:*			433	*East-West:*			443	*East-West:*			443
		SUM:		617	*SUM:*		627	*SUM:*			652	*SUM:*			662	*SUM:*			662
VOLUME/CAPACITY *(V/C)* RATIO:				0.514			0.523				0.543				0.552				0.552
V/C LESS ATSAC/ATCS ADJUSTMENT:				0.514			0.523				0.543				0.552				0.552
LEVEL OF SERVICE (LOS):				A			A				A				A				A

REMARKS: Alt. Route 3: Using only Sheldon Pit

Version: 1i Beta; 8/4/2011

PROJECT IMPACT

Change in *v/c* due to project:	0.009	Δ*v/c* after mitigation:	0.009
Significant impacted?	NO	Fully mitigated?	N/A

Level of Service Workheet
(Circular 212 Method)

I/S #:	North-South Street:	I-5 Freeway NB Ramps	Year of Count:	2015	Ambient Growth: (%):	1.5	Conducted by:	City Traffic Counters	Date:	4/28/2015
CMA4	East-West Street:	Paxton Street	Projection Year:	2018	Peak Hour:	AM	Reviewed by:		Project:	Pacoima Reservoir Project/1-13-4

No. of Phases				0				0				0				0				0		
Opposed Ø'ing: N/S-1, E/W-2 or Both-3?				0				0				0				0				0		
Right Turns: FREE-1, NRTOR-2 or OLA-3?	NB--	0	SB--	0	NB--	0	SB--	0	NB--	0	SB--	0	NB--	0	SB--	0	NB--	0	SB--	0		
	EB--	0	WB--	0	EB--	0	WB--	0	EB--	0	WB--	0	EB--	0	WB--	0	EB--	0	WB--	0		
ATSAC-1 or ATSAC+ATCS-2?				0				0				0				0				0		
Override Capacity				1200				1200				1200				1200				1200		

MOVEMENT		EXISTING CONDITION			EXISTING PLUS PROJECT			FUTURE CONDITION W/O PROJECT				FUTURE CONDITION W/ PROJECT				FUTURE W/ PROJECT W/ MITIGATION			
		Volume	No. of Lanes	Lane Volume	Project Traffic	Total Volume	Lane Volume	Added Volume	Total Volume	No. of Lanes	Lane Volume	Added Volume	Total Volume	No. of Lanes	Lane Volume	Added Volume	Total Volume	No. of Lanes	Lane Volume
NORTHBOUND	Left	12	0	12	0	12	12	0	13	0	13	0	13	0	13	0	13	0	13
	Left-Through		0							0				0				0	
	Through	19	0	**105**	0	19	**105**	0	20	0	**113**	0	20	0	**113**	0	20	0	**113**
	Through-Right		0							0				0				0	
	Right	74	0	0	0	74	0	3	80	0	0	0	80	0	0	0	80	0	0
	Left-Through-Right		1							1				1				1	
	Left-Right		0							0				0				0	
SOUTHBOUND	Left	24	0	**24**	0	24	**24**	1	26	0	**26**	0	26	0	**26**	0	26	0	**26**
	Left-Through		1							1				1				1	
	Through	1	0	25	0	1	25	0	1	0	27	0	1	0	27	0	1	0	27
	Through-Right		0							0				0				0	
	Right	44	1	0	30	74	0	1	47	1	0	30	77	1	0	0	77	1	0
	Left-Through-Right		0							0				0				0	
	Left-Right		0							0				0				0	
EASTBOUND	Left	200	1	**200**	0	200	**200**	1	210	1	**210**	0	210	1	**210**	0	210	1	**210**
	Left-Through		0							0				0				0	
	Through	502	1	265	20	522	275	5	530	1	279	20	550	1	289	0	550	1	289
	Through-Right		1							1				1				1	
	Right	27	0	27	0	27	27	0	28	0	28	0	28	0	28	0	28	0	28
	Left-Through-Right		0							0				0				0	
	Left-Right		0							0				0				0	
WESTBOUND	Left	50	1	50	0	50	50	3	55	1	55	0	55	1	55	0	55	1	55
	Left-Through		0							0				0				0	
	Through	637	1	**368**	20	657	**378**	5	671	1	**388**	20	691	1	**398**	0	691	1	**398**
	Through-Right		1							1				1				1	
	Right	99	0	99	0	99	99	1	105	0	105	0	105	0	105	0	105	0	105
	Left-Through-Right		0							0				0				0	
	Left-Right		0							0				0				0	
CRITICAL VOLUMES		*North-South:*		129	*North-South:*		129	*North-South:*			139	*North-South:*			139	*North-South:*			139
		East-West:		568	*East-West:*		578	*East-West:*			598	*East-West:*			608	*East-West:*			608
		SUM:		697	*SUM:*		707	*SUM:*			737	*SUM:*			747	*SUM:*			747
VOLUME/CAPACITY *(V/C)* RATIO:				0.581			0.589				0.614				0.623				0.623
V/C LESS ATSAC/ATCS ADJUSTMENT:				0.581			0.589				0.614				0.623				0.623
LEVEL OF SERVICE (LOS):				A			A				B				B				B

REMARKS: Alt. Route 3: Using only Sheldon Pit

Version: 1i Beta; 8/4/2011

PROJECT IMPACT

Change in *v/c* due to project:	0.009	Δ*v/c* after mitigation:	0.009
Significant impacted?	NO	Fully mitigated?	N/A

Level of Service Workheet
(Circular 212 Method)

I/S #:	North-South Street:	I-5 Freeway NB Ramps	Year of Count:	2015	Ambient Growth: (%):	1.5	Conducted by:	City Traffic Counters	Date:	4/28/2015
CMA4	East-West Street:	Paxton Street	Projection Year:	2018	Peak Hour:	Mid-Day	Reviewed by:		Project:	Pacoima Reservoir Project/1-13-4

No. of Phases				0				0				0				0				0			0
Opposed Ø'ing: N/S-1, E/W-2 or Both-3?				0				0				0				0				0			0
Right Turns: FREE-1, NRTOR-2 or OLA-3?	NB--	0	SB--	0	NB--	0	SB--	0	NB--	0	SB--	0	NB--	0	SB--	0	NB--	0	SB--	0	NB--	0	SB--	0
	EB--	0	WB--	0	EB--	0	WB--	0	EB--	0	WB--	0	EB--	0	WB--	0	EB--	0	WB--	0	EB--	0	WB--	0
ATSAC-1 or ATSAC+ATCS-2?				0				0				0				0				0				0
Override Capacity				1200				1200				1200				1200				1200				1200

MOVEMENT		EXISTING CONDITION			EXISTING PLUS PROJECT			FUTURE CONDITION W/O PROJECT				FUTURE CONDITION W/ PROJECT				FUTURE W/ PROJECT W/ MITIGATION			
		Volume	No. of Lanes	Lane Volume	Project Traffic	Total Volume	Lane Volume	Added Volume	Total Volume	No. of Lanes	Lane Volume	Added Volume	Total Volume	No. of Lanes	Lane Volume	Added Volume	Total Volume	No. of Lanes	Lane Volume
NORTHBOUND	Left	15	0	15	0	15	15	0	16	0	16	0	16	0	16	0	16	0	16
	Left-Through		0							0				0				0	
	Through	22	0	**70**	0	22	**70**	0	23	0	**74**	0	23	0	**74**	0	23	0	**74**
	Through-Right		0							0				0				0	
	Right	33	0	0	0	33	0	0	35	0	0	0	35	0	0	0	35	0	0
	Left-Through-Right		1							1				1				1	
	Left-Right		0							0				0				0	
SOUTHBOUND	Left	52	0	**52**	0	52	**52**	1	55	0	**55**	0	55	0	**55**	0	55	0	**55**
	Left-Through		1							1				1				1	
	Through	3	0	55	0	3	55	0	3	0	58	0	3	0	58	0	3	0	58
	Through-Right		0							0				0				0	
	Right	66	1	24	30	96	54	1	70	1	25	30	100	1	55	0	100	1	55
	Left-Through-Right		0							0				0				0	
	Left-Right		0							0				0				0	
EASTBOUND	Left	85	1	**85**	0	85	**85**	1	90	1	**90**	0	90	1	**90**	0	90	1	**90**
	Left-Through		0							0				0				0	
	Through	355	1	190	20	375	200	2	373	1	199	20	393	1	209	0	393	1	209
	Through-Right		1							1				1				1	
	Right	24	0	24	0	24	24	0	25	0	25	0	25	0	25	0	25	0	25
	Left-Through-Right		0							0				0				0	
	Left-Right		0							0				0				0	
WESTBOUND	Left	12	1	12	0	12	12	0	13	1	13	0	13	1	13	0	13	1	13
	Left-Through		0							0				0				0	
	Through	363	1	**229**	20	383	**239**	2	382	1	**241**	20	402	1	**251**	0	402	1	**251**
	Through-Right		1							1				1				1	
	Right	94	0	94	0	94	94	1	99	0	99	0	99	0	99	0	99	0	99
	Left-Through-Right		0							0				0				0	
	Left-Right		0							0				0				0	
CRITICAL VOLUMES		*North-South:*		122	*North-South:*		122	*North-South:*			129	*North-South:*			129	*North-South:*			129
		East-West:		314	*East-West:*		324	*East-West:*			331	*East-West:*			341	*East-West:*			341
		SUM:		436	*SUM:*		446	*SUM:*			460	*SUM:*			470	*SUM:*			470
VOLUME/CAPACITY *(V/C)* RATIO:				0.363			0.372				0.383				0.392				0.392
V/C LESS ATSAC/ATCS ADJUSTMENT:				0.363			0.372				0.383				0.392				0.392
LEVEL OF SERVICE (LOS):				A			A				A				A				A

REMARKS: Alt. Route 3: Using only Sheldon Pit

Version: 1i Beta; 8/4/2011

PROJECT IMPACT

Change in *v/c* due to project:	0.009	Δ*v/c* after mitigation:	0.009
Significant impacted?	NO	Fully mitigated?	N/A

Level of Service Workheet
(Circular 212 Method)

I/S #:	North-South Street:	I-5 Freeway NB Ramps	Year of Count:	2015	Ambient Growth: (%):	1.5	Conducted by:	City Traffic Counters	Date:	4/28/2015
CMA4	East-West Street:	Paxton Street	Projection Year:	2018	Peak Hour:	PM	Reviewed by:		Project:	Pacoima Reservoir Project/1-13-4

	Existing Condition			Existing Plus Project			Future Condition W/O Project			Future Condition W/ Project			Future W/ Project W/ Mitigation		
No. of Phases			0			0			0			0			0
Opposed Ø'ing: N/S-1, E/W-2 or Both-3?			0			0			0			0			0
Right Turns: FREE-1, NRTOR-2 or OLA-3?	NB-- 0	SB--	0	NB-- 0	SB--	0	NB-- 0	SB--	0	NB-- 0	SB--	0	NB-- 0	SB--	0
	EB-- 0	WB--	0	EB-- 0	WB--	0	EB-- 0	WB--	0	EB-- 0	WB--	0	EB-- 0	WB--	0
ATSAC-1 or ATSAC+ATCS-2?			0			0			0			0			0
Override Capacity			1200			1200			1200			1200			1200

	MOVEMENT	Existing Condition Volume	No. of Lanes	Lane Volume	Existing Plus Project Project Traffic	Total Volume	Lane Volume	Future Condition W/O Project Added Volume	Total Volume	No. of Lanes	Lane Volume	Future Condition W/ Project Added Volume	Total Volume	No. of Lanes	Lane Volume	Future W/ Project W/ Mitigation Added Volume	Total Volume	No. of Lanes	Lane Volume
NORTHBOUND	Left	6	0	6	0	6	6	0	6	0	6	0	6	0	6	0	6	0	6
	Left-Through		0							0				0				0	
	Through	8	0	**57**	0	8	**57**	0	8	0	**61**	0	8	0	**61**	0	8	0	**61**
	Through-Right		0							0				0				0	
	Right	43	0	0	0	43	0	2	47	0	0	0	47	0	0	0	47	0	0
	Left-Through-Right		1							1				1				1	
	Left-Right		0							0				0				0	
SOUTHBOUND	Left	69	0	**69**	0	69	**69**	1	73	0	**73**	0	73	0	**73**	0	73	0	**73**
	Left-Through		1							1				1				1	
	Through	6	0	75	0	6	75	0	6	0	79	0	6	0	79	0	6	0	79
	Through-Right		0							0				0				0	
	Right	57	1	0	30	87	0	1	61	1	0	30	91	1	0	0	91	1	0
	Left-Through-Right		0							0				0				0	
	Left-Right		0							0				0				0	
EASTBOUND	Left	226	1	**226**	0	226	**226**	1	237	1	**237**	0	237	1	**237**	0	237	1	**237**
	Left-Through		0							0				0				0	
	Through	623	1	322	20	643	332	4	655	1	338	20	675	1	348	0	675	1	348
	Through-Right		1							1				1				1	
	Right	20	0	20	0	20	20	0	21	0	21	0	21	0	21	0	21	0	21
	Left-Through-Right		0							0				0				0	
	Left-Right		0							0				0				0	
WESTBOUND	Left	14	1	14	0	14	14	2	17	1	17	0	17	1	17	0	17	1	17
	Left-Through		0							0				0				0	
	Through	489	1	**343**	20	509	**353**	4	515	1	**361**	20	535	1	**371**	0	535	1	**371**
	Through-Right		1							1				1				1	
	Right	197	0	197	0	197	197	1	207	0	207	0	207	0	207	0	207	0	207
	Left-Through-Right		0							0				0				0	
	Left-Right		0							0				0				0	
CRITICAL VOLUMES		North-South:		126	North-South:		126	North-South:			134	North-South:			134	North-South:			134
		East-West:		569	East-West:		579	East-West:			598	East-West:			608	East-West:			608
		SUM:		695	SUM:		705	SUM:			732	SUM:			742	SUM:			742
VOLUME/CAPACITY (V/C) RATIO:				0.579			0.588				0.610				0.618				0.618
V/C LESS ATSAC/ATCS ADJUSTMENT:				0.579			0.588				0.610				0.618				0.618
LEVEL OF SERVICE (LOS):				A			A				B				B				B

REMARKS: Alt. Route 3: Using only Sheldon Pit

Version: 1i Beta; 8/4/2011

PROJECT IMPACT

Change in *v/c* due to project:	0.008	Δ*v/c* after mitigation:	0.008
Significant impacted?	NO	Fully mitigated?	N/A

Level of Service Workheet
(Circular 212 Method)

I/S #:	North-South Street:	Laurel Canyon Boulevard	Year of Count:	2015	Ambient Growth: (%):	1.5	Conducted by:	City Traffic Counters	Date:	4/28/2015
CMA5	East-West Street:	Branford Street	Projection Year:	2018	Peak Hour:	AM	Reviewed by:		Project:	Pacoima Reservoir Project/1-13-4

No. of Phases				3				3				3				3				3		
Opposed Ø'ing: N/S-1, E/W-2 or Both-3?				0				0				0				0				0		
Right Turns: FREE-1, NRTOR-2 or OLA-3?	NB--	0	SB--	0	NB--	0	SB--	0	NB--	0	SB--	0	NB--	0	SB--	0	NB--	0	SB--	0		
	EB--	0	WB--	0	EB--	0	WB--	0	EB--	0	WB--	0	EB--	0	WB--	0	EB--	0	WB--	0		
ATSAC-1 or ATSAC+ATCS-2?				2				2				2				2				2		
Override Capacity				0				0				0				0				0		

	MOVEMENT	EXISTING CONDITION			EXISTING PLUS PROJECT			FUTURE CONDITION W/O PROJECT				FUTURE CONDITION W/ PROJECT				FUTURE W/ PROJECT W/ MITIGATION			
		Volume	No. of Lanes	Lane Volume	Project Traffic	Total Volume	Lane Volume	Added Volume	Total Volume	No. of Lanes	Lane Volume	Added Volume	Total Volume	No. of Lanes	Lane Volume	Added Volume	Total Volume	No. of Lanes	Lane Volume
NORTHBOUND	Left	149	2	**82**	0	149	**82**	0	156	2	**86**	0	156	2	**86**	0	156	2	**86**
	Left-Through		0							0				0				0	
	Through	397	1	271	0	397	271	12	427	1	290	0	427	1	290	0	427	1	290
	Through-Right		1							1				1				1	
	Right	145	0	145	0	145	145	0	152	0	152	0	152	0	152	0	152	0	152
	Left-Through-Right		0							0				0				0	
	Left-Right		0							0				0				0	
SOUTHBOUND	Left	136	2	75	0	136	75	1	143	2	79	0	143	2	79	0	143	2	79
	Left-Through		0							0				0				0	
	Through	984	1	**555**	0	984	**555**	8	1037	1	**588**	0	1037	1	**588**	0	1037	1	**588**
	Through-Right		1							1				1				1	
	Right	126	0	126	0	126	126	7	139	0	139	0	139	0	139	0	139	0	139
	Left-Through-Right		0							0				0				0	
	Left-Right		0							0				0				0	
EASTBOUND	Left	98	1	**98**	0	98	**98**	11	113	1	**113**	0	113	1	**113**	0	113	1	**113**
	Left-Through		0							0				0				0	
	Through	524	1	428	0	524	428	0	548	1	448	0	548	1	448	0	548	1	448
	Through-Right		1							1				1				1	
	Right	332	0	332	0	332	332	0	347	0	347	0	347	0	347	0	347	0	347
	Left-Through-Right		0							0				0				0	
	Left-Right		0							0				0				0	
WESTBOUND	Left	172	1	172	0	172	172	0	180	1	180	0	180	1	180	0	180	1	180
	Left-Through		0							0				0				0	
	Through	531	1	**531**	0	531	**531**	0	555	1	**555**	0	555	1	**555**	0	555	1	**555**
	Through-Right		0							0				0				0	
	Right	129	1	92	0	129	92	2	137	1	98	0	137	1	98	0	137	1	98
	Left-Through-Right		0							0				0				0	
	Left-Right		0							0				0				0	
CRITICAL VOLUMES		North-South:		637	North-South:		637	North-South:			674	North-South:			674	North-South:			674
		East-West:		629	East-West:		629	East-West:			668	East-West:			668	East-West:			668
		SUM:		1266	SUM:		1266	SUM:			1342	SUM:			1342	SUM:			1342
VOLUME/CAPACITY (V/C) RATIO:				0.888			0.888				0.942				0.942				0.942
V/C LESS ATSAC/ATCS ADJUSTMENT:				**0.788**			**0.788**				**0.842**				**0.842**				**0.842**
LEVEL OF SERVICE (LOS):				**C**			**C**				**D**				**D**				**D**

REMARKS: Alt. Route 3: Using only Sheldon Pit

Version: 1i Beta; 8/4/2011

PROJECT IMPACT

Change in *v/c* due to project:	0.000	Δ*v/c* after mitigation:	0.000
Significant impacted?	NO	Fully mitigated?	N/A

Level of Service Workheet
(Circular 212 Method)

I/S #:	North-South Street:	Laurel Canyon Boulevard	Year of Count:	2015	Ambient Growth: (%):	1.5	Conducted by:	City Traffic Counters	Date:	4/28/2015
CMA5	East-West Street:	Branford Street	Projection Year:	2018	Peak Hour:	Mid-Day	Reviewed by:		Project:	Pacoima Reservoir Project/1-13-4

No. of Phases				3				3				3				3				3		
Opposed Ø'ing: N/S-1, E/W-2 or Both-3?				0				0				0				0				0		
Right Turns: FREE-1, NRTOR-2 or OLA-3?	NB--	0	SB--	0	NB--	0	SB--	0	NB--	0	SB--	0	NB--	0	SB--	0	NB--	0	SB--	0		
	EB--	0	WB--	0	EB--	0	WB--	0	EB--	0	WB--	0	EB--	0	WB--	0	EB--	0	WB--	0		
ATSAC-1 or ATSAC+ATCS-2?				2				2				2				2				2		
Override Capacity				0				0				0				0				0		

	MOVEMENT	EXISTING CONDITION			EXISTING PLUS PROJECT			FUTURE CONDITION W/O PROJECT				FUTURE CONDITION W/ PROJECT				FUTURE W/ PROJECT W/ MITIGATION			
		Volume	No. of Lanes	Lane Volume	Project Traffic	Total Volume	Lane Volume	Added Volume	Total Volume	No. of Lanes	Lane Volume	Added Volume	Total Volume	No. of Lanes	Lane Volume	Added Volume	Total Volume	No. of Lanes	Lane Volume
NORTHBOUND	Left	94	2	52	0	94	52	0	98	2	54	0	98	2	54	0	98	2	54
	Left-Through		0							0				0				0	
	Through	455	1	**284**	0	455	**284**	1	477	1	**297**	0	477	1	**297**	0	477	1	**297**
	Through-Right		1							1				1				1	
	Right	112	0	112	0	112	112	0	117	0	117	0	117	0	117	0	117	0	117
	Left-Through-Right		0							0				0				0	
	Left-Right		0							0				0				0	
SOUTHBOUND	Left	89	2	**49**	0	89	**49**	0	93	2	**51**	0	93	2	**51**	0	93	2	**51**
	Left-Through		0							0				0				0	
	Through	380	1	256	0	380	256	1	398	1	268	0	398	1	268	0	398	1	268
	Through-Right		1							1				1				1	
	Right	131	0	131	0	131	131	0	137	0	137	0	137	0	137	0	137	0	137
	Left-Through-Right		0							0				0				0	
	Left-Right		0							0				0				0	
EASTBOUND	Left	114	1	**114**	0	114	**114**	0	119	1	**119**	0	119	1	**119**	0	119	1	**119**
	Left-Through		0							0				0				0	
	Through	243	1	202	0	243	202	0	254	1	211	0	254	1	211	0	254	1	211
	Through-Right		1							1				1				1	
	Right	160	0	160	0	160	160	0	167	0	167	0	167	0	167	0	167	0	167
	Left-Through-Right		0							0				0				0	
	Left-Right		0							0				0				0	
WESTBOUND	Left	91	1	91	0	91	91	0	95	1	95	0	95	1	95	0	95	1	95
	Left-Through		0							0				0				0	
	Through	265	1	**265**	0	265	**265**	0	277	1	**277**	0	277	1	**277**	0	277	1	**277**
	Through-Right		0							0				0				0	
	Right	117	1	93	0	117	93	0	122	1	97	0	122	1	97	0	122	1	97
	Left-Through-Right		0							0				0				0	
	Left-Right		0							0				0				0	
CRITICAL VOLUMES		*North-South:*		333	*North-South:*		333	*North-South:*			348	*North-South:*			348	*North-South:*			348
		East-West:		379	*East-West:*		379	*East-West:*			396	*East-West:*			396	*East-West:*			396
		SUM:		712	*SUM:*		712	*SUM:*			744	*SUM:*			744	*SUM:*			744
VOLUME/CAPACITY *(V/C)* RATIO:				0.500			0.500				0.522				0.522				0.522
V/C LESS ATSAC/ATCS ADJUSTMENT:				**0.400**			**0.400**				**0.422**				**0.422**				**0.422**
LEVEL OF SERVICE (LOS):				**A**			**A**				**A**				**A**				**A**

REMARKS: Alt. Route 3: Using only Sheldon Pit

Version: 1i Beta; 8/4/2011

PROJECT IMPACT

Change in *v/c* due to project:	0.000	Δ*v/c* after mitigation:	0.000
Significant impacted?	NO	Fully mitigated?	N/A

Level of Service Workheet
(Circular 212 Method)

I/S #:	North-South Street:	Laurel Canyon Boulevard	Year of Count:	2015	Ambient Growth: (%):	1.5	Conducted by:	City Traffic Counters	Date:	4/28/2015
CMA5	East-West Street:	Branford Street	Projection Year:	2018	Peak Hour:	PM	Reviewed by:		Project:	Pacoima Reservoir Project/1-13-4

No. of Phases				3				3				3				3				3		
Opposed Ø'ing: N/S-1, E/W-2 or Both-3?				0				0				0				0				0		
Right Turns: FREE-1, NRTOR-2 or OLA-3?	NB--	0	SB--	0	NB--	0	SB--	0	NB--	0	SB--	0	NB--	0	SB--	0	NB--	0	SB--	0		
	EB--	0	WB--	0	EB--	0	WB--	0	EB--	0	WB--	0	EB--	0	WB--	0	EB--	0	WB--	0		
ATSAC-1 or ATSAC+ATCS-2?				2				2				2				2				2		
Override Capacity				0				0				0				0				0		

	MOVEMENT	EXISTING CONDITION			EXISTING PLUS PROJECT			FUTURE CONDITION W/O PROJECT				FUTURE CONDITION W/ PROJECT				FUTURE W/ PROJECT W/ MITIGATION			
		Volume	No. of Lanes	Lane Volume	Project Traffic	Total Volume	Lane Volume	Added Volume	Total Volume	No. of Lanes	Lane Volume	Added Volume	Total Volume	No. of Lanes	Lane Volume	Added Volume	Total Volume	No. of Lanes	Lane Volume
NORTHBOUND	Left	119	2	65	0	119	65	0	124	2	68	0	124	2	68	0	124	2	68
	Left-Through		0							0				0				0	
	Through	852	1	**501**	0	852	**501**	4	895	1	**526**	0	895	1	**526**	0	895	1	**526**
	Through-Right		1							1				1				1	
	Right	150	0	150	0	150	150	0	157	0	157	0	157	0	157	0	157	0	157
	Left-Through-Right		0							0				0				0	
	Left-Right		0							0				0				0	
SOUTHBOUND	Left	99	2	**54**	0	99	**54**	1	105	2	**58**	0	105	2	**58**	0	105	2	**58**
	Left-Through		0							0				0				0	
	Through	473	1	307	0	473	307	6	501	1	327	0	501	1	327	0	501	1	327
	Through-Right		1							1				1				1	
	Right	141	0	141	0	141	141	5	152	0	152	0	152	0	152	0	152	0	152
	Left-Through-Right		0							0				0				0	
	Left-Right		0							0				0				0	
EASTBOUND	Left	153	1	**153**	0	153	**153**	3	163	1	**163**	0	163	1	**163**	0	163	1	**163**
	Left-Through		0							0				0				0	
	Through	402	1	291	0	402	291	0	420	1	304	0	420	1	304	0	420	1	304
	Through-Right		1							1				1				1	
	Right	179	0	179	0	179	179	0	187	0	187	0	187	0	187	0	187	0	187
	Left-Through-Right		0							0				0				0	
	Left-Right		0							0				0				0	
WESTBOUND	Left	157	1	157	0	157	157	0	164	1	164	0	164	1	164	0	164	1	164
	Left-Through		0							0				0				0	
	Through	447	1	**447**	0	447	**447**	0	467	1	**467**	0	467	1	**467**	0	467	1	**467**
	Through-Right		0							0				0				0	
	Right	151	1	124	0	151	124	1	159	1	130	0	159	1	130	0	159	1	130
	Left-Through-Right		0							0				0				0	
	Left-Right		0							0				0				0	
CRITICAL VOLUMES			*North-South:*	555		*North-South:*	555		*North-South:*	584			*North-South:*	584			*North-South:*	584	
			East-West:	600		*East-West:*	600		*East-West:*	630			*East-West:*	630			*East-West:*	630	
			SUM:	1155		*SUM:*	1155		*SUM:*	1214			*SUM:*	1214			*SUM:*	1214	
VOLUME/CAPACITY *(V/C)* RATIO:				0.811			0.811			0.852				0.852				0.852	
V/C LESS ATSAC/ATCS ADJUSTMENT:				**0.711**			**0.711**			**0.752**				**0.752**				**0.752**	
LEVEL OF SERVICE (LOS):				**C**			**C**			**C**				**C**				**C**	

REMARKS: Alt. Route 3: Using only Sheldon Pit

Version: 1i Beta; 8/4/2011

PROJECT IMPACT

Change in *v/c* due to project:	0.000	Δ*v/c* after mitigation:	0.000
Significant impacted?	NO	Fully mitigated?	N/A

Level of Service Workheet
(Circular 212 Method)

I/S #:	North-South Street:	San Fernando Road	Year of Count:	2015	Ambient Growth: (%):	1.5	Conducted by:	City Traffic Counters	Date:	4/28/2015
CMA6	East-West Street:	Branford Street	Projection Year:	2018	Peak Hour:	AM	Reviewed by:		Project:	Pacoima Reservoir Project/1-13-4

No. of Phases				4				4				4				4				4			
Opposed Ø'ing: N/S-1, E/W-2 or Both-3?				0				0				0				0				0			
Right Turns: FREE-1, NRTOR-2 or OLA-3?	NB--	0	SB--	0	NB--	0	SB--	0	NB--	0	SB--	0	NB--	0	SB--	0	NB--	0	SB--	0			
	EB--	0	WB--	0	EB--	0	WB--	0	EB--	0	WB--	0	EB--	0	WB--	0	EB--	0	WB--	0			
ATSAC-1 or ATSAC+ATCS-2?				2				2				2				2				2			
Override Capacity				0				0				0				0				0			

	MOVEMENT	EXISTING CONDITION			EXISTING PLUS PROJECT			FUTURE CONDITION W/O PROJECT				FUTURE CONDITION W/ PROJECT				FUTURE W/ PROJECT W/ MITIGATION			
		Volume	No. of Lanes	Lane Volume	Project Traffic	Total Volume	Lane Volume	Added Volume	Total Volume	No. of Lanes	Lane Volume	Added Volume	Total Volume	No. of Lanes	Lane Volume	Added Volume	Total Volume	No. of Lanes	Lane Volume
NORTHBOUND	Left	99	1	**99**	0	99	**99**	0	104	1	**104**	0	104	1	**104**	0	104	1	**104**
	Left-Through		0							0				0				0	
	Through	405	1	282	20	425	292	4	427	1	297	20	447	1	307	0	447	1	307
	Through-Right		1							1				1				1	
	Right	159	0	159	0	159	159	0	166	0	166	0	166	0	166	0	166	0	166
	Left-Through-Right		0							0				0				0	
	Left-Right		0							0				0				0	
SOUTHBOUND	Left	81	1	81	0	81	81	0	85	1	85	0	85	1	85	0	85	1	85
	Left-Through		0							0				0				0	
	Through	965	1	**540**	20	985	**550**	8	1017	1	**569**	20	1037	1	**579**	0	1037	1	**579**
	Through-Right		1							1				1				1	
	Right	115	0	115	0	115	115	0	120	0	120	0	120	0	120	0	120	0	120
	Left-Through-Right		0							0				0				0	
	Left-Right		0							0				0				0	
EASTBOUND	Left	66	1	66	0	66	66	0	69	1	69	0	69	1	69	0	69	1	69
	Left-Through		0							0				0				0	
	Through	408	1	**408**	0	408	**408**	0	427	1	**427**	0	427	1	**427**	0	427	1	**427**
	Through-Right		0							0				0				0	
	Right	209	1	160	0	209	160	0	219	1	167	0	219	1	167	0	219	1	167
	Left-Through-Right		0							0				0				0	
	Left-Right		0							0				0				0	
WESTBOUND	Left	117	0	**117**	0	117	**117**	0	122	0	**122**	0	122	0	**122**	0	122	0	**122**
	Left-Through		0							0				0				0	
	Through	270	0	436	0	270	436	0	282	0	455	0	282	0	455	0	282	0	455
	Through-Right		0							0				0				0	
	Right	49	0	0	0	49	0	0	51	0	0	0	51	0	0	0	51	0	0
	Left-Through-Right		1							1				1				1	
	Left-Right		0							0				0				0	
CRITICAL VOLUMES			*North-South:*	639		*North-South:*	649		*North-South:*	673			*North-South:*	683			*North-South:*	683	
			East-West:	525		*East-West:*	525		*East-West:*	549			*East-West:*	549			*East-West:*	549	
			SUM:	1164		*SUM:*	1174		*SUM:*	1222			*SUM:*	1232			*SUM:*	1232	
VOLUME/CAPACITY *(V/C)* RATIO:				0.847			0.854			0.889				0.896				0.896	
V/C LESS ATSAC/ATCS ADJUSTMENT:				**0.747**			**0.754**			**0.789**				**0.796**				**0.796**	
LEVEL OF SERVICE (LOS):				**C**			**C**			**C**				**C**				**C**	

REMARKS: Alt. Route 3: Using only Sheldon Pit

Version: 1i Beta; 8/4/2011

PROJECT IMPACT

Change in *v/c* due to project:	0.007	Δ*v/c* after mitigation:	0.007
Significant impacted?	NO	Fully mitigated?	N/A

Level of Service Workheet
(Circular 212 Method)

I/S #:	North-South Street:	San Fernando Road	Year of Count:	2015	Ambient Growth: (%):	1.5	Conducted by:	City Traffic Counters	Date:	4/28/2015
CMA6	East-West Street:	Branford Street	Projection Year:	2018	Peak Hour:	Mid-Day	Reviewed by:		Project:	Pacoima Reservoir Project/1-13-4

No. of Phases				4				4				4				4				4			4
Opposed Ø'ing: N/S-1, E/W-2 or Both-3?				0				0				0				0				0			0
Right Turns: FREE-1, NRTOR-2 or OLA-3?	NB--	0	SB--	0	NB--	0	SB--	0	NB--	0	SB--	0	NB--	0	SB--	0	NB--	0	SB--	0	NB--	0	SB--	0
	EB--	0	WB--	0	EB--	0	WB--	0	EB--	0	WB--	0	EB--	0	WB--	0	EB--	0	WB--	0	EB--	0	WB--	0
ATSAC-1 or ATSAC+ATCS-2?				2				2				2				2				2			2
Override Capacity				0				0				0				0				0			0

	MOVEMENT	EXISTING CONDITION			EXISTING PLUS PROJECT			FUTURE CONDITION W/O PROJECT				FUTURE CONDITION W/ PROJECT				FUTURE W/ PROJECT W/ MITIGATION			
		Volume	No. of Lanes	Lane Volume	Project Traffic	Total Volume	Lane Volume	Added Volume	Total Volume	No. of Lanes	Lane Volume	Added Volume	Total Volume	No. of Lanes	Lane Volume	Added Volume	Total Volume	No. of Lanes	Lane Volume
NORTHBOUND	Left	61	1	61	0	61	61	0	64	1	64	0	64	1	64	0	64	1	64
	Left-Through		0							0				0				0	
	Through	442	1	**297**	20	462	**307**	8	470	1	**315**	20	490	1	**325**	0	490	1	**325**
	Through-Right		1							1				1				1	
	Right	152	0	152	0	152	152	0	159	0	159	0	159	0	159	0	159	0	159
	Left-Through-Right		0							0				0				0	
	Left-Right		0							0				0				0	
SOUTHBOUND	Left	82	1	**82**	0	82	**82**	0	86	1	**86**	0	86	1	**86**	0	86	1	**86**
	Left-Through		0							0				0				0	
	Through	423	1	254	20	443	264	6	448	1	269	20	468	1	279	0	468	1	279
	Through-Right		1							1				1				1	
	Right	85	0	85	0	85	85	0	89	0	89	0	89	0	89	0	89	0	89
	Left-Through-Right		0							0				0				0	
	Left-Right		0							0				0				0	
EASTBOUND	Left	43	1	**43**	0	43	**43**	0	45	1	**45**	0	45	1	**45**	0	45	1	**45**
	Left-Through		0							0				0				0	
	Through	227	1	227	0	227	227	0	237	1	237	0	237	1	237	0	237	1	237
	Through-Right		0							0				0				0	
	Right	97	1	67	0	97	67	0	101	1	69	0	101	1	69	0	101	1	69
	Left-Through-Right		0							0				0				0	
	Left-Right		0							0				0				0	
WESTBOUND	Left	110	0	110	0	110	110	0	115	0	115	0	115	0	115	0	115	0	115
	Left-Through		0							0				0				0	
	Through	229	0	**412**	0	229	**412**	0	239	0	**430**	0	239	0	**430**	0	239	0	**430**
	Through-Right		0							0				0				0	
	Right	73	0	0	0	73	0	0	76	0	0	0	76	0	0	0	76	0	0
	Left-Through-Right		1							1				1				1	
	Left-Right		0							0				0				0	
CRITICAL VOLUMES		*North-South:*		379	*North-South:*		389	*North-South:*			401	*North-South:*			411	*North-South:*			411
		East-West:		455	*East-West:*		455	*East-West:*			475	*East-West:*			475	*East-West:*			475
		SUM:		834	*SUM:*		844	*SUM:*			876	*SUM:*			886	*SUM:*			886
VOLUME/CAPACITY *(V/C)* RATIO:				0.607			0.614				0.637				0.644				0.644
V/C LESS ATSAC/ATCS ADJUSTMENT:				**0.507**			**0.514**				**0.537**				**0.544**				**0.544**
LEVEL OF SERVICE (LOS):				**A**			**A**				**A**				**A**				**A**

REMARKS: Alt. Route 3: Using only Sheldon Pit

Version: 1i Beta; 8/4/2011

PROJECT IMPACT

Change in *v/c* due to project:	0.007	Δ*v/c* after mitigation:	0.007
Significant impacted?	NO	Fully mitigated?	N/A

Level of Service Workheet
(Circular 212 Method)

I/S #:	North-South Street:	San Fernando Road	Year of Count:	2015	Ambient Growth: (%):	1.5	Conducted by:	City Traffic Counters	Date:	4/28/2015
CMA6	East-West Street:	Branford Street	Projection Year:	2018	Peak Hour:	PM	Reviewed by:		Project:	Pacoima Reservoir Project/1-13-4

No. of Phases				4				4				4				4				4			
Opposed Ø'ing: N/S-1, E/W-2 or Both-3?				0				0				0				0				0			
Right Turns: FREE-1, NRTOR-2 or OLA-3?	NB--	0	SB--	0	NB--	0	SB--	0	NB--	0	SB--	0	NB--	0	SB--	0	NB--	0	SB--	0			
	EB--	0	WB--	0	EB--	0	WB--	0	EB--	0	WB--	0	EB--	0	WB--	0	EB--	0	WB--	0			
ATSAC-1 or ATSAC+ATCS-2?				2				2				2				2				2			
Override Capacity				0				0				0				0				0			

	MOVEMENT	EXISTING CONDITION			EXISTING PLUS PROJECT			FUTURE CONDITION W/O PROJECT				FUTURE CONDITION W/ PROJECT				FUTURE W/ PROJECT W/ MITIGATION			
		Volume	No. of Lanes	Lane Volume	Project Traffic	Total Volume	Lane Volume	Added Volume	Total Volume	No. of Lanes	Lane Volume	Added Volume	Total Volume	No. of Lanes	Lane Volume	Added Volume	Total Volume	No. of Lanes	Lane Volume
NORTHBOUND	Left	104	1	104	0	104	104	0	109	1	109	0	109	1	109	0	109	1	109
	Left-Through		0							0				0				0	
	Through	681	1	**403**	20	701	**413**	8	720	1	**425**	20	740	1	**435**	0	740	1	**435**
	Through-Right		1							1				1				1	
	Right	124	0	124	0	124	124	0	130	0	130	0	130	0	130	0	130	0	130
	Left-Through-Right		0							0				0				0	
	Left-Right		0							0				0				0	
SOUTHBOUND	Left	58	1	**58**	0	58	**58**	0	61	1	**61**	0	61	1	**61**	0	61	1	**61**
	Left-Through		0							0				0				0	
	Through	374	1	229	20	394	239	6	397	1	243	20	417	1	253	0	417	1	253
	Through-Right		1							1				1				1	
	Right	84	0	84	0	84	84	0	88	0	88	0	88	0	88	0	88	0	88
	Left-Through-Right		0							0				0				0	
	Left-Right		0							0				0				0	
EASTBOUND	Left	61	1	**61**	0	61	**61**	0	64	1	**64**	0	64	1	**64**	0	64	1	**64**
	Left-Through		0							0				0				0	
	Through	264	1	264	0	264	264	0	276	1	276	0	276	1	276	0	276	1	276
	Through-Right		0							0				0				0	
	Right	68	1	16	0	68	16	0	71	1	17	0	71	1	17	0	71	1	17
	Left-Through-Right		0							0				0				0	
	Left-Right		0							0				0				0	
WESTBOUND	Left	113	0	113	0	113	113	0	118	0	118	0	118	0	118	0	118	0	118
	Left-Through		0							0				0				0	
	Through	314	0	**484**	0	314	**484**	0	328	0	**506**	0	328	0	**506**	0	328	0	**506**
	Through-Right		0							0				0				0	
	Right	57	0	0	0	57	0	0	60	0	0	0	60	0	0	0	60	0	0
	Left-Through-Right		1							1				1				1	
	Left-Right		0							0				0				0	
CRITICAL VOLUMES		North-South:		461	North-South:		471	North-South:			486	North-South:			496	North-South:			496
		East-West:		545	East-West:		545	East-West:			570	East-West:			570	East-West:			570
		SUM:		1006	SUM:		1016	SUM:			1056	SUM:			1066	SUM:			1066
VOLUME/CAPACITY (V/C) RATIO:				0.732			0.739				0.768				0.775				0.775
V/C LESS ATSAC/ATCS ADJUSTMENT:				**0.632**			**0.639**				**0.668**				**0.675**				**0.675**
LEVEL OF SERVICE (LOS):				**B**			**B**				**B**				**B**				**B**

REMARKS: Alt. Route 3: Using only Sheldon Pit

Version: 1i Beta; 8/4/2011

PROJECT IMPACT

Change in *v/c* due to project:	0.007	Δ*v/c* after mitigation:	0.007
Significant impacted?	NO	Fully mitigated?	N/A

Level of Service Workheet
(Circular 212 Method)

I/S #:	North-South Street:	Laurel Canyon Boulevard	Year of Count:	2015	Ambient Growth: (%):	1.5	Conducted by:	City Traffic Counters	Date:	4/28/2015
CMA7	East-West Street:	I-5 Freeway NB Off-Ramp	Projection Year:	2018	Peak Hour:	AM	Reviewed by:		Project:	Pacoima Reservoir Project/1-13-4

No. of Phases				0				0				0				0				0			0
Opposed Ø'ing: N/S-1, E/W-2 or Both-3?				0				0				0				0				0			0
Right Turns: FREE-1, NRTOR-2 or OLA-3?	NB--	0	SB--	0	NB--	0	SB--	0	NB--	0	SB--	0	NB--	0	SB--	0	NB--	0	SB--	0	NB--	0	SB-- 0
	EB--	0	WB--	0	EB--	0	WB--	0	EB--	0	WB--	0	EB--	0	WB--	0	EB--	0	WB--	0	EB--	0	WB-- 0
ATSAC-1 or ATSAC+ATCS-2?				0				0				0				0				0			0
Override Capacity				1200				1200				1200				1200				1200			1200

MOVEMENT		EXISTING CONDITION			EXISTING PLUS PROJECT			FUTURE CONDITION W/O PROJECT				FUTURE CONDITION W/ PROJECT				FUTURE W/ PROJECT W/ MITIGATION			
		Volume	No. of Lanes	Lane Volume	Project Traffic	Total Volume	Lane Volume	Added Volume	Total Volume	No. of Lanes	Lane Volume	Added Volume	Total Volume	No. of Lanes	Lane Volume	Added Volume	Total Volume	No. of Lanes	Lane Volume
NORTHBOUND	Left	0	0	**0**	0	0	**0**	0	0	0	**0**	0	0	0	**0**	0	0	0	**0**
	Left-Through		0							0				0				0	
	Through	535	1	278	0	535	278	12	571	1	297	0	571	1	297	0	571	1	297
	Through-Right		1							1				1				1	
	Right	21	0	21	0	21	21	0	22	0	22	0	22	0	22	0	22	0	22
	Left-Through-Right		0							0				0				0	
	Left-Right		0							0				0				0	
SOUTHBOUND	Left	79	1	79	0	79	79	0	83	1	83	0	83	1	83	0	83	1	83
	Left-Through		0							0				0				0	
	Through	1279	2	**640**	0	1279	**640**	8	1345	2	**673**	0	1345	2	**673**	0	1345	2	**673**
	Through-Right		0							0				0				0	
	Right	0	0	0	0	0	0	0	0	0	0	0	0	0	0	0	0	0	0
	Left-Through-Right		0							0				0				0	
	Left-Right		0							0				0				0	
EASTBOUND	Left	27	0	27	0	27	27	0	28	0	28	0	28	0	28	0	28	0	28
	Left-Through		1							1				1				1	
	Through	5	0	32	0	5	32	0	5	0	33	0	5	0	33	0	5	0	33
	Through-Right		0							0				0				0	
	Right	273	1	**273**	0	273	**273**	0	285	1	**285**	0	285	1	**285**	0	285	1	**285**
	Left-Through-Right		0							0				0				0	
	Left-Right		0							0				0				0	
WESTBOUND	Left	21	0	**21**	0	21	**21**	0	22	0	**22**	0	22	0	**22**	0	22	0	**22**
	Left-Through		0							0				0				0	
	Through	0	0	94	0	0	94	0	0	0	98	0	0	0	98	0	0	0	98
	Through-Right		0							0				0				0	
	Right	73	0	0	0	73	0	0	76	0	0	0	76	0	0	0	76	0	0
	Left-Through-Right		1							1				1				1	
	Left-Right		0							0				0				0	
CRITICAL VOLUMES		*North-South:*		640	*North-South:*		640	*North-South:*			673	*North-South:*			673	*North-South:*			673
		East-West:		294	*East-West:*		294	*East-West:*			307	*East-West:*			307	*East-West:*			307
		SUM:		934	*SUM:*		934	*SUM:*			980	*SUM:*			980	*SUM:*			980
VOLUME/CAPACITY *(V/C)* RATIO:				0.778			0.778				0.817				0.817				0.817
V/C LESS ATSAC/ATCS ADJUSTMENT:				0.778			0.778				0.817				0.817				0.817
LEVEL OF SERVICE (LOS):				C			C				D				D				D

REMARKS: Alt. Route 3: Using only Sheldon Pit

Version: 1i Beta; 8/4/2011

PROJECT IMPACT

Change in *v/c* due to project:	0.000	Δ*v/c* after mitigation:	0.000
Significant impacted?	NO	Fully mitigated?	N/A

Level of Service Workheet
(Circular 212 Method)

I/S #:	North-South Street:	Laurel Canyon Boulevard	Year of Count:	2015	Ambient Growth: (%):	1.5	Conducted by:	City Traffic Counters	Date:	4/28/2015
CMA7	East-West Street:	I-5 Freeway NB Off-Ramp	Projection Year:	2018	Peak Hour:	Mid-Day	Reviewed by:		Project:	Pacoima Reservoir Project/1-13-4

No. of Phases				0				0				0				0				0			0
Opposed Ø'ing: N/S-1, E/W-2 or Both-3?				0				0				0				0				0			0
Right Turns: FREE-1, NRTOR-2 or OLA-3?	NB--	0	SB--	0	NB--	0	SB--	0	NB--	0	SB--	0	NB--	0	SB--	0	NB--	0	SB--	0	NB--	0	SB-- 0
	EB--	0	WB--	0	EB--	0	WB--	0	EB--	0	WB--	0	EB--	0	WB--	0	EB--	0	WB--	0	EB--	0	WB-- 0
ATSAC-1 or ATSAC+ATCS-2?				0				0				0				0				0			0
Override Capacity				1200				1200				1200				1200				1200			1200

MOVEMENT		EXISTING CONDITION			EXISTING PLUS PROJECT			FUTURE CONDITION W/O PROJECT				FUTURE CONDITION W/ PROJECT				FUTURE W/ PROJECT W/ MITIGATION			
		Volume	No. of Lanes	Lane Volume	Project Traffic	Total Volume	Lane Volume	Added Volume	Total Volume	No. of Lanes	Lane Volume	Added Volume	Total Volume	No. of Lanes	Lane Volume	Added Volume	Total Volume	No. of Lanes	Lane Volume
NORTHBOUND	Left	0	0	**0**	0	0	**0**	0	0	0	**0**	0	0	0	**0**	0	0	0	**0**
	Left-Through		0							0				0				0	
	Through	386	1	207	0	386	207	1	405	1	217	0	405	1	217	0	405	1	217
	Through-Right		1							1				1				1	
	Right	28	0	28	0	28	28	0	29	0	29	0	29	0	29	0	29	0	29
	Left-Through-Right		0							0				0				0	
	Left-Right		0							0				0				0	
SOUTHBOUND	Left	28	1	28	0	28	28	0	29	1	29	0	29	1	29	0	29	1	29
	Left-Through		0							0				0				0	
	Through	499	2	**250**	0	499	**250**	1	523	2	**262**	0	523	2	**262**	0	523	2	**262**
	Through-Right		0							0				0				0	
	Right	0	0	0	0	0	0	0	0	0	0	0	0	0	0	0	0	0	0
	Left-Through-Right		0							0				0				0	
	Left-Right		0							0				0				0	
EASTBOUND	Left	40	0	40	0	40	40	0	42	0	42	0	42	0	42	0	42	0	42
	Left-Through		1							1				1				1	
	Through	7	0	47	0	7	47	0	7	0	49	0	7	0	49	0	7	0	49
	Through-Right		0							0				0				0	
	Right	142	1	**142**	0	142	**142**	0	148	1	**148**	0	148	1	**148**	0	148	1	**148**
	Left-Through-Right		0							0				0				0	
	Left-Right		0							0				0				0	
WESTBOUND	Left	17	0	**17**	0	17	**17**	0	18	0	**18**	0	18	0	**18**	0	18	0	**18**
	Left-Through		0							0				0				0	
	Through	0	0	41	0	0	41	0	0	0	43	0	0	0	43	0	0	0	43
	Through-Right		0							0				0				0	
	Right	24	0	0	0	24	0	0	25	0	0	0	25	0	0	0	25	0	0
	Left-Through-Right		1							1				1				1	
	Left-Right		0							0				0				0	
CRITICAL VOLUMES			*North-South:*	250		*North-South:*	250		*North-South:*	262			*North-South:*	262			*North-South:*	262	
			East-West:	159		*East-West:*	159		*East-West:*	166			*East-West:*	166			*East-West:*	166	
			SUM:	409		*SUM:*	409		*SUM:*	428			*SUM:*	428			*SUM:*	428	
VOLUME/CAPACITY *(V/C)* RATIO:				0.341			0.341				0.357				0.357				0.357
V/C LESS ATSAC/ATCS ADJUSTMENT:				0.341			0.341				0.357				0.357				0.357
LEVEL OF SERVICE (LOS):				**A**			**A**				**A**				**A**				**A**

REMARKS: Alt. Route 3: Using only Sheldon Pit

Version: 1i Beta; 8/4/2011

PROJECT IMPACT

Change in *v/c* due to project:	0.000	Δ*v/c* after mitigation:	0.000
Significant impacted?	NO	Fully mitigated?	N/A

Level of Service Workheet
(Circular 212 Method)

I/S #:	North-South Street:	Laurel Canyon Boulevard	Year of Count:	2015	Ambient Growth: (%):	1.5	Conducted by:	City Traffic Counters	Date:	4/28/2015
CMA7	East-West Street:	I-5 Freeway NB Off-Ramp	Projection Year:	2018	Peak Hour:	PM	Reviewed by:		Project:	Pacoima Reservoir Project/1-13-4

No. of Phases				0				0				0				0				0			0
Opposed Ø'ing: N/S-1, E/W-2 or Both-3?				0				0				0				0				0			0
Right Turns: FREE-1, NRTOR-2 or OLA-3?	NB--	0	SB--	0	NB--	0	SB--	0	NB--	0	SB--	0	NB--	0	SB--	0	NB--	0	SB--	0	NB--	0	SB-- 0
	EB--	0	WB--	0	EB--	0	WB--	0	EB--	0	WB--	0	EB--	0	WB--	0	EB--	0	WB--	0	EB--	0	WB-- 0
ATSAC-1 or ATSAC+ATCS-2?				0				0				0				0				0			0
Override Capacity				1200				1200				1200				1200				1200			1200

MOVEMENT		EXISTING CONDITION			EXISTING PLUS PROJECT			FUTURE CONDITION W/O PROJECT				FUTURE CONDITION W/ PROJECT				FUTURE W/ PROJECT W/ MITIGATION			
		Volume	No. of Lanes	Lane Volume	Project Traffic	Total Volume	Lane Volume	Added Volume	Total Volume	No. of Lanes	Lane Volume	Added Volume	Total Volume	No. of Lanes	Lane Volume	Added Volume	Total Volume	No. of Lanes	Lane Volume
NORTHBOUND	Left	0	0	0	0	0	0	0	0	0	0	0	0	0	0	0	0	0	0
	Left-Through		0							0				0				0	
	Through	1013	1	**522**	0	1013	**522**	4	1063	1	**547**	0	1063	1	**547**	0	1063	1	**547**
	Through-Right		1							1				1				1	
	Right	30	0	30	0	30	30	0	31	0	31	0	31	0	31	0	31	0	31
	Left-Through-Right		0							0				0				0	
	Left-Right		0							0				0				0	
SOUTHBOUND	Left	44	1	**44**	0	44	**44**	0	46	1	**46**	0	46	1	**46**	0	46	1	**46**
	Left-Through		0							0				0				0	
	Through	763	2	382	0	763	382	6	804	2	402	0	804	2	402	0	804	2	402
	Through-Right		0							0				0				0	
	Right	0	0	0	0	0	0	0	0	0	0	0	0	0	0	0	0	0	0
	Left-Through-Right		0							0				0				0	
	Left-Right		0							0				0				0	
EASTBOUND	Left	53	0	53	0	53	53	0	55	0	55	0	55	0	55	0	55	0	55
	Left-Through		1							1				1				1	
	Through	16	0	69	0	16	69	0	17	0	72	0	17	0	72	0	17	0	72
	Through-Right		0							0				0				0	
	Right	200	1	**200**	0	200	**200**	0	209	1	**209**	0	209	1	**209**	0	209	1	**209**
	Left-Through-Right		0							0				0				0	
	Left-Right		0							0				0				0	
WESTBOUND	Left	19	0	**19**	0	19	**19**	0	20	0	**20**	0	20	0	**20**	0	20	0	**20**
	Left-Through		0							0				0				0	
	Through	0	0	65	0	0	65	0	0	0	68	0	0	0	68	0	0	0	68
	Through-Right		0							0				0				0	
	Right	46	0	0	0	46	0	0	48	0	0	0	48	0	0	0	48	0	0
	Left-Through-Right		1							1				1				1	
	Left-Right		0							0				0				0	
CRITICAL VOLUMES		*North-South:*		566	*North-South:*		566	*North-South:*			593	*North-South:*			593	*North-South:*			593
		East-West:		219	*East-West:*		219	*East-West:*			229	*East-West:*			229	*East-West:*			229
		SUM:		785	*SUM:*		785	*SUM:*			822	*SUM:*			822	*SUM:*			822
VOLUME/CAPACITY *(V/C)* RATIO:				0.654			0.654				0.685				0.685				0.685
V/C LESS ATSAC/ATCS ADJUSTMENT:				0.654			0.654				0.685				0.685				0.685
LEVEL OF SERVICE (LOS):				**B**			**B**				**B**				**B**				**B**

REMARKS: Alt. Route 3: Using only Sheldon Pit

Version: 1i Beta; 8/4/2011

PROJECT IMPACT

Change in *v/c* due to project:	0.000	Δ*v/c* after mitigation:	0.000
Significant impacted?	NO	Fully mitigated?	N/A

Level of Service Workheet
(Circular 212 Method)

I/S #:	North-South Street:	Laurel Canyon Boulevard	Year of Count:	2015	Ambient Growth: (%):	1.5	Conducted by:	City Traffic Counters	Date:	4/28/2015
CMA8	East-West Street:	Sheldon Street	Projection Year:	2018	Peak Hour:	AM	Reviewed by:		Project:	Pacoima Reservoir Project/1-13-4

No. of Phases				2				2				2				2				2			2
Opposed Ø'ing: N/S-1, E/W-2 or Both-3?				0				0				0				0				0			0
Right Turns: FREE-1, NRTOR-2 or OLA-3?	NB--	0	SB--	0	NB--	0	SB--	0	NB--	0	SB--	0	NB--	0	SB--	0	NB--	0	SB--	0	NB--	0	SB-- 0
	EB--	0	WB--	0	EB--	0	WB--	0	EB--	0	WB--	0	EB--	0	WB--	0	EB--	0	WB--	0	EB--	0	WB-- 0
ATSAC-1 or ATSAC+ATCS-2?				2				2				2				2				2			2
Override Capacity				0				0				0				0				0			0

	MOVEMENT	EXISTING CONDITION			EXISTING PLUS PROJECT			FUTURE CONDITION W/O PROJECT				FUTURE CONDITION W/ PROJECT				FUTURE W/ PROJECT W/ MITIGATION			
		Volume	No. of Lanes	Lane Volume	Project Traffic	Total Volume	Lane Volume	Added Volume	Total Volume	No. of Lanes	Lane Volume	Added Volume	Total Volume	No. of Lanes	Lane Volume	Added Volume	Total Volume	No. of Lanes	Lane Volume
NORTHBOUND	Left	47	1	**47**	0	47	**47**	0	49	1	**49**	0	49	1	**49**	0	49	1	**49**
	Left-Through		0							0				0				0	
	Through	347	2	174	0	347	174	12	375	2	188	0	375	2	188	0	375	2	188
	Through-Right		0							0				0				0	
	Right	220	1	175	30	250	205	0	230	1	183	30	260	1	213	0	260	1	213
	Left-Through-Right		0							0				0				0	
	Left-Right		0							0				0				0	
SOUTHBOUND	Left	152	1	152	0	152	152	0	159	1	159	0	159	1	159	0	159	1	159
	Left-Through		0							0				0				0	
	Through	1202	1	**705**	0	1202	**705**	8	1265	1	**742**	0	1265	1	**742**	0	1265	1	**742**
	Through-Right		1							1				1				1	
	Right	208	0	208	0	208	208	0	218	0	218	0	218	0	218	0	218	0	218
	Left-Through-Right		0							0				0				0	
	Left-Right		0							0				0				0	
EASTBOUND	Left	129	1	**129**	0	129	**129**	0	135	1	**135**	0	135	1	**135**	0	135	1	**135**
	Left-Through		0							0				0				0	
	Through	804	1	462	0	804	462	0	841	1	483	0	841	1	483	0	841	1	483
	Through-Right		1							1				1				1	
	Right	119	0	119	0	119	119	0	124	0	124	0	124	0	124	0	124	0	124
	Left-Through-Right		0							0				0				0	
	Left-Right		0							0				0				0	
WESTBOUND	Left	91	1	91	0	91	91	0	95	1	95	0	95	1	95	0	95	1	95
	Left-Through		0							0				0				0	
	Through	857	1	**487**	0	857	**487**	0	896	1	**509**	0	896	1	**509**	0	896	1	**509**
	Through-Right		1							1				1				1	
	Right	116	0	116	0	116	116	0	121	0	121	0	121	0	121	0	121	0	121
	Left-Through-Right		0							0				0				0	
	Left-Right		0							0				0				0	
CRITICAL VOLUMES		*North-South:*		752	*North-South:*		752	*North-South:*			791	*North-South:*			791	*North-South:*			791
		East-West:		616	*East-West:*		616	*East-West:*			644	*East-West:*			644	*East-West:*			644
		SUM:		1368	*SUM:*		1368	*SUM:*			1435	*SUM:*			1435	*SUM:*			1435
VOLUME/CAPACITY *(V/C)* RATIO:				0.912			0.912				0.957				0.957				0.957
V/C LESS ATSAC/ATCS ADJUSTMENT:				**0.812**			**0.812**				**0.857**				**0.857**				**0.857**
LEVEL OF SERVICE (LOS):				**D**			**D**				**D**				**D**				**D**

REMARKS: Alt. Route 3: Using only Sheldon Pit

Version: 1i Beta; 8/4/2011

PROJECT IMPACT

Change in *v/c* due to project:	0.000	Δ*v/c* after mitigation:	0.000
Significant impacted?	NO	Fully mitigated?	N/A

Level of Service Workheet
(Circular 212 Method)

I/S #:	North-South Street:	Laurel Canyon Boulevard	Year of Count:	2015	Ambient Growth: (%):	1.5	Conducted by:	City Traffic Counters	Date:	4/28/2015
CMA8	East-West Street:	Sheldon Street	Projection Year:	2018	Peak Hour:	Mid-Day	Reviewed by:		Project:	Pacoima Reservoir Project/1-13-4

No. of Phases				2				2				2				2				2			2
Opposed Ø'ing: N/S-1, E/W-2 or Both-3?				0				0				0				0				0			0
Right Turns: FREE-1, NRTOR-2 or OLA-3?	NB--	0	SB--	0	NB--	0	SB--	0	NB--	0	SB--	0	NB--	0	SB--	0	NB--	0	SB--	0	NB--	0	SB-- 0
	EB--	0	WB--	0	EB--	0	WB--	0	EB--	0	WB--	0	EB--	0	WB--	0	EB--	0	WB--	0	EB--	0	WB-- 0
ATSAC-1 or ATSAC+ATCS-2?				2				2				2				2				2			2
Override Capacity				0				0				0				0				0			0

	MOVEMENT	EXISTING CONDITION			EXISTING PLUS PROJECT			FUTURE CONDITION W/O PROJECT				FUTURE CONDITION W/ PROJECT				FUTURE W/ PROJECT W/ MITIGATION			
		Volume	No. of Lanes	Lane Volume	Project Traffic	Total Volume	Lane Volume	Added Volume	Total Volume	No. of Lanes	Lane Volume	Added Volume	Total Volume	No. of Lanes	Lane Volume	Added Volume	Total Volume	No. of Lanes	Lane Volume
NORTHBOUND	Left	16	1	**16**	0	16	16	0	17	1	**17**	0	17	1	17	0	17	1	17
	Left-Through		0							0				0				0	
	Through	261	2	131	0	261	131	1	274	2	137	0	274	2	137	0	274	2	137
	Through-Right		0							0				0				0	
	Right	221	1	165	30	251	**195**	0	231	1	172	30	261	1	**202**	0	261	1	**202**
	Left-Through-Right		0							0				0				0	
	Left-Right		0							0				0				0	
SOUTHBOUND	Left	117	1	117	0	117	**117**	0	122	1	122	0	122	1	**122**	0	122	1	**122**
	Left-Through		0							0				0				0	
	Through	459	1	**281**	0	459	281	1	481	1	**294**	0	481	1	294	0	481	1	294
	Through-Right		1							1				1				1	
	Right	102	0	102	0	102	102	0	107	0	107	0	107	0	107	0	107	0	107
	Left-Through-Right		0							0				0				0	
	Left-Right		0							0				0				0	
EASTBOUND	Left	58	1	58	0	58	58	0	61	1	61	0	61	1	61	0	61	1	61
	Left-Through		0							0				0				0	
	Through	431	1	**274**	0	431	**274**	0	451	1	**287**	0	451	1	**287**	0	451	1	**287**
	Through-Right		1							1				1				1	
	Right	117	0	117	0	117	117	0	122	0	122	0	122	0	122	0	122	0	122
	Left-Through-Right		0							0				0				0	
	Left-Right		0							0				0				0	
WESTBOUND	Left	113	1	**113**	0	113	**113**	0	118	1	**118**	0	118	1	**118**	0	118	1	**118**
	Left-Through		0							0				0				0	
	Through	363	1	226	0	363	226	0	380	1	236	0	380	1	236	0	380	1	236
	Through-Right		1							1				1				1	
	Right	88	0	88	0	88	88	0	92	0	92	0	92	0	92	0	92	0	92
	Left-Through-Right		0							0				0				0	
	Left-Right		0							0				0				0	
CRITICAL VOLUMES		*North-South:*		297	*North-South:*		312	*North-South:*			311	*North-South:*			324	*North-South:*			324
		East-West:		387	*East-West:*		387	*East-West:*			405	*East-West:*			405	*East-West:*			405
		SUM:		684	*SUM:*		699	*SUM:*			716	*SUM:*			729	*SUM:*			729
VOLUME/CAPACITY *(V/C)* RATIO:				0.456			0.466				0.477				0.486				0.486
V/C LESS ATSAC/ATCS ADJUSTMENT:				**0.356**			**0.366**				**0.377**				**0.386**				**0.386**
LEVEL OF SERVICE (LOS):				**A**			**A**				**A**				**A**				**A**

REMARKS: Alt. Route 3: Using only Sheldon Pit

Version: 1i Beta; 8/4/2011

PROJECT IMPACT

Change in *v/c* due to project:	0.009	Δ*v/c* after mitigation:	0.009
Significant impacted?	NO	Fully mitigated?	N/A

Level of Service Workheet
(Circular 212 Method)

I/S #:	North-South Street:	Laurel Canyon Boulevard	Year of Count:	2015	Ambient Growth: (%):	1.5	Conducted by:	City Traffic Counters	Date:	4/28/2015
CMA8	East-West Street:	Sheldon Street	Projection Year:	2018	Peak Hour:	PM	Reviewed by:		Project:	Pacoima Reservoir Project/1-13-4

	Existing Condition	Existing Plus Project	Future Condition W/O Project	Future Condition W/ Project	Future W/ Project W/ Mitigation
No. of Phases	2	2	2	2	2
Opposed Ø'ing: N/S-1, E/W-2 or Both-3?	0	0	0	0	0
Right Turns: FREE-1, NRTOR-2 or OLA-3?	NB-- 0 SB-- 0 EB-- 0 WB-- 0	NB-- 0 SB-- 0 EB-- 0 WB-- 0	NB-- 0 SB-- 0 EB-- 0 WB-- 0	NB-- 0 SB-- 0 EB-- 0 WB-- 0	NB-- 0 SB-- 0 EB-- 0 WB-- 0
ATSAC-1 or ATSAC+ATCS-2?	2	2	2	2	2
Override Capacity	0	0	0	0	0

	MOVEMENT	Existing Condition Volume	No. of Lanes	Lane Volume	Existing Plus Project Project Traffic	Total Volume	Lane Volume	Future Cond. W/O Project Added Volume	Total Volume	No. of Lanes	Lane Volume	Future Cond. W/ Project Added Volume	Total Volume	No. of Lanes	Lane Volume	Future W/ Project W/ Mitigation Added Volume	Total Volume	No. of Lanes	Lane Volume
NORTHBOUND	Left	18	1	18	0	18	18	0	19	1	19	0	19	1	19	0	19	1	19
	Left-Through		0							0				0				0	
	Through	801	2	**401**	0	801	**401**	4	842	2	**421**	0	842	2	**421**	0	842	2	**421**
	Through-Right		0							0				0				0	
	Right	224	1	179	30	254	209	0	234	1	187	30	264	1	217	0	264	1	217
	Left-Through-Right		0							0				0				0	
	Left-Right		0							0				0				0	
SOUTHBOUND	Left	112	1	**112**	0	112	**112**	0	117	1	**117**	0	117	1	**117**	0	117	1	**117**
	Left-Through		0							0				0				0	
	Through	817	1	435	0	817	435	6	860	1	457	0	860	1	457	0	860	1	457
	Through-Right		1							1				1				1	
	Right	52	0	52	0	52	52	0	54	0	54	0	54	0	54	0	54	0	54
	Left-Through-Right		0							0				0				0	
	Left-Right		0							0				0				0	
EASTBOUND	Left	118	1	118	0	118	118	0	123	1	123	0	123	1	123	0	123	1	123
	Left-Through		0							0				0				0	
	Through	891	1	**483**	0	891	**483**	0	932	1	**505**	0	932	1	**505**	0	932	1	**505**
	Through-Right		1							1				1				1	
	Right	74	0	74	0	74	74	0	77	0	77	0	77	0	77	0	77	0	77
	Left-Through-Right		0							0				0				0	
	Left-Right		0							0				0				0	
WESTBOUND	Left	90	1	**90**	0	90	**90**	0	94	1	**94**	0	94	1	**94**	0	94	1	**94**
	Left-Through		0							0				0				0	
	Through	654	1	374	0	654	374	0	684	1	391	0	684	1	391	0	684	1	391
	Through-Right		1							1				1				1	
	Right	93	0	93	0	93	93	0	97	0	97	0	97	0	97	0	97	0	97
	Left-Through-Right		0							0				0				0	
	Left-Right		0							0				0				0	
CRITICAL VOLUMES		North-South:		513	North-South:		513	North-South:			538	North-South:			538	North-South:			538
		East-West:		573	East-West:		573	East-West:			599	East-West:			599	East-West:			599
		SUM:		1086	SUM:		1086	SUM:			1137	SUM:			1137	SUM:			1137
VOLUME/CAPACITY (V/C) RATIO:				0.724			0.724				0.758				0.758				0.758
V/C LESS ATSAC/ATCS ADJUSTMENT:				**0.624**			**0.624**				**0.658**				**0.658**				**0.658**
LEVEL OF SERVICE (LOS):				**B**			**B**				**B**				**B**				**B**

REMARKS: Alt. Route 3: Using only Sheldon Pit

Version: 1i Beta; 8/4/2011

PROJECT IMPACT

Change in *v/c* due to project:	0.000	Δ*v/c* after mitigation:	0.000
Significant impacted?	NO	Fully mitigated?	N/A

Level of Service Workheet
(Circular 212 Method)

I/S #:	North-South Street:	Laurel Canyon Boulevard	Year of Count:	2015	Ambient Growth: (%):	1.5	Conducted by:	City Traffic Counters	Date:	4/28/2015
CMA9	East-West Street:	I-5 Freeway SB Ramps	Projection Year:	2018	Peak Hour:	AM	Reviewed by:		Project:	Pacoima Reservoir Project/1-13-4

No. of Phases				0				0				0				0				0			
Opposed Ø'ing: N/S-1, E/W-2 or Both-3?				0				0				0				0				0			
Right Turns: FREE-1, NRTOR-2 or OLA-3?	NB--	0	SB--	0	NB--	0	SB--	0	NB--	0	SB--	0	NB--	0	SB--	0	NB--	0	SB--	0			
	EB--	0	WB--	0	EB--	0	WB--	0	EB--	0	WB--	0	EB--	0	WB--	0	EB--	0	WB--	0			
ATSAC-1 or ATSAC+ATCS-2?				0				0				0				0				0			
Override Capacity				1200				1200				1200				1200				1200			

MOVEMENT		EXISTING CONDITION			EXISTING PLUS PROJECT			FUTURE CONDITION W/O PROJECT				FUTURE CONDITION W/ PROJECT				FUTURE W/ PROJECT W/ MITIGATION			
		Volume	No. of Lanes	Lane Volume	Project Traffic	Total Volume	Lane Volume	Added Volume	Total Volume	No. of Lanes	Lane Volume	Added Volume	Total Volume	No. of Lanes	Lane Volume	Added Volume	Total Volume	No. of Lanes	Lane Volume
NORTHBOUND	Left	0	0	0	0	0	0	0	0	0	0	0	0	0	0	0	0	0	0
	Left-Through		0							0				0				0	
	Through	600	1	**365**	0	600	**365**	12	639	1	**387**	0	639	1	**387**	0	639	1	**387**
	Through-Right		1							1				1				1	
	Right	129	0	129	0	129	129	0	135	0	135	0	135	0	135	0	135	0	135
	Left-Through-Right		0							0				0				0	
	Left-Right		0							0				0				0	
SOUTHBOUND	Left	561	1	**561**	0	561	**561**	0	587	1	**587**	0	587	1	**587**	0	587	1	**587**
	Left-Through		0							0				0				0	
	Through	692	2	346	0	692	346	8	732	2	366	0	732	2	366	0	732	2	366
	Through-Right		0							0				0				0	
	Right	0	0	0	0	0	0	0	0	0	0	0	0	0	0	0	0	0	0
	Left-Through-Right		0							0				0				0	
	Left-Right		0							0				0				0	
EASTBOUND	Left	0	0	0	0	0	0	0	0	0	0	0	0	0	0	0	0	0	0
	Left-Through		0							0				0				0	
	Through	0	0	**0**	0	0	**0**	0	0	0	**0**	0	0	0	**0**	0	0	0	**0**
	Through-Right		0							0				0				0	
	Right	0	0	0	0	0	0	0	0	0	0	0	0	0	0	0	0	0	0
	Left-Through-Right		0							0				0				0	
	Left-Right		0							0				0				0	
WESTBOUND	Left	22	1	**22**	0	22	**22**	0	23	1	**23**	0	23	1	**23**	0	23	1	**23**
	Left-Through		0							0				0				0	
	Through	0	0	0	0	0	0	0	0	0	0	0	0	0	0	0	0	0	0
	Through-Right		0							0				0				0	
	Right	93	1	0	30	123	0	0	97	1	0	30	127	1	0	0	127	1	0
	Left-Through-Right		0							0				0				0	
	Left-Right		0							0				0				0	
CRITICAL VOLUMES		*North-South:*		926	*North-South:*		926	*North-South:*			974	*North-South:*			974	*North-South:*			974
		East-West:		22	*East-West:*		22	*East-West:*			23	*East-West:*			23	*East-West:*			23
		SUM:		948	*SUM:*		948	*SUM:*			997	*SUM:*			997	*SUM:*			997
VOLUME/CAPACITY *(V/C)* RATIO:				0.790			0.790				0.831				0.831				0.831
V/C LESS ATSAC/ATCS ADJUSTMENT:				0.790			0.790				0.831				0.831				0.831
LEVEL OF SERVICE (LOS):				C			C				D				D				D

REMARKS: Alt. Route 3: Using only Sheldon Pit

Version: 1i Beta; 8/4/2011

PROJECT IMPACT

Change in *v/c* due to project:	0.000	Δ*v/c* after mitigation:	0.000
Significant impacted?	NO	Fully mitigated?	N/A

Level of Service Workheet
(Circular 212 Method)

I/S #:	North-South Street:	Laurel Canyon Boulevard	Year of Count:	2015	Ambient Growth: (%):	1.5	Conducted by:	City Traffic Counters	Date:	4/28/2015
CMA9	East-West Street:	I-5 Freeway SB Ramps	Projection Year:	2018	Peak Hour:	Mid-Day	Reviewed by:		Project:	Pacoima Reservoir Project/1-13-4

No. of Phases				0				0				0				0				0	
Opposed Ø'ing: N/S-1, E/W-2 or Both-3?				0				0				0				0				0	
Right Turns: FREE-1, NRTOR-2 or OLA-3?	NB--	0	SB--	0	NB--	0	SB--	0	NB--	0	SB--	0	NB--	0	SB--	0	NB--	0	SB--	0	
	EB--	0	WB--	0	EB--	0	WB--	0	EB--	0	WB--	0	EB--	0	WB--	0	EB--	0	WB--	0	
ATSAC-1 or ATSAC+ATCS-2?				0				0				0				0				0	
Override Capacity				1200				1200				1200				1200				1200	

MOVEMENT		EXISTING CONDITION			EXISTING PLUS PROJECT			FUTURE CONDITION W/O PROJECT				FUTURE CONDITION W/ PROJECT				FUTURE W/ PROJECT W/ MITIGATION			
		Volume	No. of Lanes	Lane Volume	Project Traffic	Total Volume	Lane Volume	Added Volume	Total Volume	No. of Lanes	Lane Volume	Added Volume	Total Volume	No. of Lanes	Lane Volume	Added Volume	Total Volume	No. of Lanes	Lane Volume
NORTHBOUND	Left	0	0	0	0	0	0	0	0	0	0	0	0	0	0	0	0	0	0
	Left-Through		0							0				0				0	
	Through	467	1	**265**	0	467	**265**	1	489	1	**278**	0	489	1	**278**	0	489	1	**278**
	Through-Right		1							1				1				1	
	Right	63	0	63	0	63	63	0	66	0	66	0	66	0	66	0	66	0	66
	Left-Through-Right		0							0				0				0	
	Left-Right		0							0				0				0	
SOUTHBOUND	Left	253	1	**253**	0	253	**253**	0	265	1	**265**	0	265	1	**265**	0	265	1	**265**
	Left-Through		0							0				0				0	
	Through	420	2	210	0	420	210	1	440	2	220	0	440	2	220	0	440	2	220
	Through-Right		0							0				0				0	
	Right	0	0	0	0	0	0	0	0	0	0	0	0	0	0	0	0	0	0
	Left-Through-Right		0							0				0				0	
	Left-Right		0							0				0				0	
EASTBOUND	Left	0	0	0	0	0	0	0	0	0	0	0	0	0	0	0	0	0	0
	Left-Through		0							0				0				0	
	Through	0	0	**0**	0	0	**0**	0	0	0	**0**	0	0	0	**0**	0	0	0	**0**
	Through-Right		0							0				0				0	
	Right	0	0	0	0	0	0	0	0	0	0	0	0	0	0	0	0	0	0
	Left-Through-Right		0							0				0				0	
	Left-Right		0							0				0				0	
WESTBOUND	Left	52	1	**52**	0	52	**52**	0	54	1	**54**	0	54	1	**54**	0	54	1	**54**
	Left-Through		0							0				0				0	
	Through	0	0	0	0	0	0	0	0	0	0	0	0	0	0	0	0	0	0
	Through-Right		0							0				0				0	
	Right	141	1	15	30	171	45	0	147	1	15	30	177	1	45	0	177	1	45
	Left-Through-Right		0							0				0				0	
	Left-Right		0							0				0				0	
CRITICAL VOLUMES		*North-South:*		518	*North-South:*		518	*North-South:*			543	*North-South:*			543	*North-South:*			543
		East-West:		52	*East-West:*		52	*East-West:*			54	*East-West:*			54	*East-West:*			54
		SUM:		570	*SUM:*		570	*SUM:*			597	*SUM:*			597	*SUM:*			597
VOLUME/CAPACITY *(V/C)* RATIO:				0.475			0.475				0.498				0.498				0.498
V/C LESS ATSAC/ATCS ADJUSTMENT:				0.475			0.475				0.498				0.498				0.498
LEVEL OF SERVICE (LOS):				A			A				A				A				A

REMARKS: Alt. Route 3: Using only Sheldon Pit

Version: 1i Beta; 8/4/2011

PROJECT IMPACT

Change in *v/c* due to project:	0.000	Δ*v/c* after mitigation:	0.000
Significant impacted?	NO	Fully mitigated?	N/A

Level of Service Workheet
(Circular 212 Method)

I/S #:	North-South Street:	Laurel Canyon Boulevard	Year of Count:	2015	Ambient Growth: (%):	1.5	Conducted by:	City Traffic Counters	Date:	4/28/2015
CMA9	East-West Street:	I-5 Freeway SB Ramps	Projection Year:	2018	Peak Hour:	PM	Reviewed by:		Project:	Pacoima Reservoir Project/1-13-4

No. of Phases				0				0				0				0				0			
Opposed Ø'ing: N/S-1, E/W-2 or Both-3?				0				0				0				0				0			
Right Turns: FREE-1, NRTOR-2 or OLA-3?	NB--	0	SB--	0	NB--	0	SB--	0	NB--	0	SB--	0	NB--	0	SB--	0	NB--	0	SB--	0			
	EB--	0	WB--	0	EB--	0	WB--	0	EB--	0	WB--	0	EB--	0	WB--	0	EB--	0	WB--	0			
ATSAC-1 or ATSAC+ATCS-2?				0				0				0				0				0			
Override Capacity				1200				1200				1200				1200				1200			

MOVEMENT		EXISTING CONDITION			EXISTING PLUS PROJECT			FUTURE CONDITION W/O PROJECT				FUTURE CONDITION W/ PROJECT				FUTURE W/ PROJECT W/ MITIGATION			
		Volume	No. of Lanes	Lane Volume	Project Traffic	Total Volume	Lane Volume	Added Volume	Total Volume	No. of Lanes	Lane Volume	Added Volume	Total Volume	No. of Lanes	Lane Volume	Added Volume	Total Volume	No. of Lanes	Lane Volume
NORTHBOUND	Left	0	0	0	0	0	0	0	0	0	0	0	0	0	0	0	0	0	0
	Left-Through		0							0				0				0	
	Through	1026	1	**538**	0	1026	**538**	4	1077	1	**565**	0	1077	1	**565**	0	1077	1	**565**
	Through-Right		1							1				1				1	
	Right	50	0	50	0	50	50	0	52	0	52	0	52	0	52	0	52	0	52
	Left-Through-Right		0							0				0				0	
	Left-Right		0							0				0				0	
SOUTHBOUND	Left	391	1	**391**	0	391	**391**	0	409	1	**409**	0	409	1	**409**	0	409	1	**409**
	Left-Through		0							0				0				0	
	Through	564	2	282	0	564	282	6	596	2	298	0	596	2	298	0	596	2	298
	Through-Right		0							0				0				0	
	Right	0	0	0	0	0	0	0	0	0	0	0	0	0	0	0	0	0	0
	Left-Through-Right		0							0				0				0	
	Left-Right		0							0				0				0	
EASTBOUND	Left	0	0	0	0	0	**0**	0	0	0	0	0	0	0	**0**	0	0	0	**0**
	Left-Through		0							0				0				0	
	Through	0	0	**0**	0	0	0	0	0	0	**0**	0	0	0	0	0	0	0	0
	Through-Right		0							0				0				0	
	Right	0	0	0	0	0	0	0	0	0	0	0	0	0	0	0	0	0	0
	Left-Through-Right		0							0				0				0	
	Left-Right		0							0				0				0	
WESTBOUND	Left	37	1	**37**	0	37	37	0	39	1	**39**	0	39	1	39	0	39	1	39
	Left-Through		0							0				0				0	
	Through	0	0	0	0	0	0	0	0	0	0	0	0	0	0	0	0	0	0
	Through-Right		0							0				0				0	
	Right	212	1	17	30	242	**47**	0	222	1	18	30	252	1	**48**	0	252	1	**48**
	Left-Through-Right		0							0				0				0	
	Left-Right		0							0				0				0	
CRITICAL VOLUMES		*North-South:*		929	*North-South:*		929	*North-South:*			974	*North-South:*			974	*North-South:*			974
		East-West:		37	*East-West:*		47	*East-West:*			39	*East-West:*			48	*East-West:*			48
		SUM:		966	*SUM:*		976	*SUM:*			1013	*SUM:*			1022	*SUM:*			1022
VOLUME/CAPACITY *(V/C)* RATIO:				0.805			0.813				0.844				0.852				0.852
V/C LESS ATSAC/ATCS ADJUSTMENT:				0.805			0.813				0.844				0.852				0.852
LEVEL OF SERVICE (LOS):				D			D				D				D				D

REMARKS: Alt. Route 3: Using only Sheldon Pit

Version: 1i Beta; 8/4/2011

PROJECT IMPACT

Change in *v/c* due to project:	0.008	Δ*v/c* after mitigation:	0.008
Significant impacted?	NO	Fully mitigated?	N/A

Level of Service Workheet
(Circular 212 Method)

I/S #:	North-South Street:	I-5 Freeway NB On-Ramp-Rincon Ave	Year of Count:	2015	Ambient Growth: (%):	1.5	Conducted by:	City Traffic Counters	Date:	4/28/2015
CMA10	East-West Street:	Sheldon Street	Projection Year:	2018	Peak Hour:	AM	Reviewed by:		Project:	Pacoima Reservoir Project/1-13-4

	Existing Condition	Existing Plus Project	Future Condition W/O Project	Future Condition W/ Project	Future W/ Project W/ Mitigation
No. of Phases	0	0	0	0	0
Opposed Ø'ing: N/S-1, E/W-2 or Both-3?	0	0	0	0	0
Right Turns: FREE-1, NRTOR-2 or OLA-3?	NB-- 0 SB-- 0	NB-- 0 SB-- 0	NB-- 0 SB-- 0	NB-- 0 SB-- 0	NB-- 0 SB-- 0
	EB-- 0 WB-- 0	EB-- 0 WB-- 0	EB-- 0 WB-- 0	EB-- 0 WB-- 0	EB-- 0 WB-- 0
ATSAC-1 or ATSAC+ATCS-2?	0	0	0	0	0
Override Capacity	1200	#####	1200	1200	1200

	MOVEMENT	Existing Condition Volume	No. of Lanes	Lane Volume	Existing Plus Project Project Traffic	Total Volume	Lane Volume	Future Condition W/O Project Added Volume	Total Volume	No. of Lanes	Lane Volume	Future Condition W/ Project Added Volume	Total Volume	No. of Lanes	Lane Volume	Future W/ Project W/ Mitigation Added Volume	Total Volume	No. of Lanes	Lane Volume
NORTHBOUND	Left	0	0	**0**	0	0	**0**	0	0	0	**0**	0	0	0	**0**	0	0	0	**0**
	Left-Through		0							0				0				0	
	Through	0	0	0	0	0	0	0	0	0	0	0	0	0	0	0	0	0	0
	Through-Right		0							0				0				0	
	Right	0	0	0	0	0	0	0	0	0	0	0	0	0	0	0	0	0	0
	Left-Through-Right		0							0				0				0	
	Left-Right		0							0				0				0	
SOUTHBOUND	Left	8	0	8	0	8	8	0	8	0	8	0	8	0	8	0	8	0	8
	Left-Through		0							0				0				0	
	Through	2	0	**42**	0	2	**42**	0	2	0	**43**	0	2	0	**43**	0	2	0	**43**
	Through-Right		0							0				0				0	
	Right	32	0	0	0	32	0	0	33	0	0	0	33	0	0	0	33	0	0
	Left-Through-Right		1							1				1				1	
	Left-Right		0							0				0				0	
EASTBOUND	Left	33	1	33	0	33	33	0	35	1	35	0	35	1	35	0	35	1	35
	Left-Through		0							0				0				0	
	Through	962	1	**577**	30	992	**592**	0	1006	1	**604**	30	1036	1	**619**	0	1036	1	**619**
	Through-Right		1							1				1				1	
	Right	192	0	192	0	192	192	0	201	0	201	0	201	0	201	0	201	0	201
	Left-Through-Right		0							0				0				0	
	Left-Right		0							0				0				0	
WESTBOUND	Left	201	1	**201**	30	231	**231**	0	210	1	**210**	30	240	1	**240**	0	240	1	**240**
	Left-Through		0							0				0				0	
	Through	1040	1	534	0	1040	534	0	1088	1	559	0	1088	1	559	0	1088	1	559
	Through-Right		1							1				1				1	
	Right	28	0	28	0	28	28	0	29	0	29	0	29	0	29	0	29	0	29
	Left-Through-Right		0							0				0				0	
	Left-Right		0							0				0				0	
CRITICAL VOLUMES		North-South:		42	North-South:		42	North-South:			43	North-South:			43	North-South:			43
		East-West:		778	East-West:		823	East-West:			814	East-West:			859	East-West:			859
		SUM:		820	SUM:		865	SUM:			857	SUM:			902	SUM:			902
VOLUME/CAPACITY (V/C) RATIO:				0.683			0.721				0.714				0.752				0.752
V/C LESS ATSAC/ATCS ADJUSTMENT:				0.683			0.721				0.714				0.752				0.752
LEVEL OF SERVICE (LOS):				**B**			**C**				**C**				**C**				**C**

REMARKS: Alt. Route 3: Using only Sheldon Pit

Version: 1i Beta; 8/4/2011

PROJECT IMPACT

Change in *v/c* due to project:	0.038	Δ*v/c* after mitigation:	0.038
Significant impacted?	NO	Fully mitigated?	N/A

Level of Service Workheet
(Circular 212 Method)

I/S #:	North-South Street:	I-5 Freeway NB On-Ramp-Rincon Ave	Year of Count:	2015	Ambient Growth: (%):	1.5	Conducted by:	City Traffic Counters	Date:	4/28/2015
CMA10	East-West Street:	Sheldon Street	Projection Year:	2018	Peak Hour:	Mid-Day	Reviewed by:		Project:	Pacoima Reservoir Project/1-13-4

	Existing Condition	Existing Plus Project	Future Condition W/O Project	Future Condition W/ Project	Future W/ Project W/ Mitigation
No. of Phases	0	0	0	0	0
Opposed Ø'ing: N/S-1, E/W-2 or Both-3?	0	0	0	0	0
Right Turns: FREE-1, NRTOR-2 or OLA-3?	NB-- 0 SB-- 0	NB-- 0 SB-- 0	NB-- 0 SB-- 0	NB-- 0 SB-- 0	NB-- 0 SB-- 0
	EB-- 0 WB-- 0	EB-- 0 WB-- 0	EB-- 0 WB-- 0	EB-- 0 WB-- 0	EB-- 0 WB-- 0
ATSAC-1 or ATSAC+ATCS-2?	0	0	0	0	0
Override Capacity	1200	#####	1200	1200	1200

	MOVEMENT	Existing Condition Volume	No. of Lanes	Lane Volume	Existing Plus Project Project Traffic	Total Volume	Lane Volume	Future Condition W/O Project Added Volume	Total Volume	No. of Lanes	Lane Volume	Future Condition W/ Project Added Volume	Total Volume	No. of Lanes	Lane Volume	Future W/ Project W/ Mitigation Added Volume	Total Volume	No. of Lanes	Lane Volume
NORTHBOUND	Left	0	0	**0**	0	0	**0**	0	0	0	**0**	0	0	0	**0**	0	0	0	**0**
	Left-Through		0							0				0				0	
	Through	0	0	0	0	0	0	0	0	0	0	0	0	0	0	0	0	0	0
	Through-Right		0							0				0				0	
	Right	0	0	0	0	0	0	0	0	0	0	0	0	0	0	0	0	0	0
	Left-Through-Right		0							0				0				0	
	Left-Right		0							0				0				0	
SOUTHBOUND	Left	12	0	12	0	12	12	0	13	0	13	0	13	0	13	0	13	0	13
	Left-Through		0							0				0				0	
	Through	10	0	**53**	0	10	**53**	0	10	0	**55**	0	10	0	**55**	0	10	0	**55**
	Through-Right		0							0				0				0	
	Right	31	0	0	0	31	0	0	32	0	0	0	32	0	0	0	32	0	0
	Left-Through-Right		1							1				1				1	
	Left-Right		0							0				0				0	
EASTBOUND	Left	22	1	22	0	22	22	0	23	1	23	0	23	1	23	0	23	1	23
	Left-Through		0							0				0				0	
	Through	616	1	**381**	30	646	**396**	0	644	1	**398**	30	674	1	**413**	0	674	1	**413**
	Through-Right		1							1				1				1	
	Right	145	0	145	0	145	145	0	152	0	152	0	152	0	152	0	152	0	152
	Left-Through-Right		0							0				0				0	
	Left-Right		0							0				0				0	
WESTBOUND	Left	147	1	**147**	30	177	**177**	0	154	1	**154**	30	184	1	**184**	0	184	1	**184**
	Left-Through		0							0				0				0	
	Through	534	1	276	0	534	276	0	558	1	288	0	558	1	288	0	558	1	288
	Through-Right		1							1				1				1	
	Right	17	0	17	0	17	17	0	18	0	18	0	18	0	18	0	18	0	18
	Left-Through-Right		0							0				0				0	
	Left-Right		0							0				0				0	
CRITICAL VOLUMES		North-South:		53	North-South:		53	North-South:			55	North-South:			55	North-South:			55
		East-West:		528	East-West:		573	East-West:			552	East-West:			597	East-West:			597
		SUM:		581	SUM:		626	SUM:			607	SUM:			652	SUM:			652
VOLUME/CAPACITY (V/C) RATIO:				0.484			0.522				0.506				0.543				0.543
V/C LESS ATSAC/ATCS ADJUSTMENT:				0.484			0.522				0.506				0.543				0.543
LEVEL OF SERVICE (LOS):				A			A				A				A				A

REMARKS: Alt. Route 3: Using only Sheldon Pit

Version: 1i Beta; 8/4/2011

PROJECT IMPACT

Change in *v/c* due to project:	0.037	Δ*v/c* after mitigation:	0.037
Significant impacted?	NO	Fully mitigated?	N/A

Level of Service Workheet
(Circular 212 Method)

I/S #:	North-South Street:	I-5 Freeway NB On-Ramp-Rincon Av	Year of Count:	2015	Ambient Growth: (%):	1.5	Conducted by:	City Traffic Counters	Date:	4/28/2015
CMA10	East-West Street:	Sheldon Street	Projection Year:	2018	Peak Hour:	PM	Reviewed by:		Project:	Pacoima Reservoir Project/1-13-4

	Existing Condition	Existing Plus Project	Future Condition W/O Project	Future Condition W/ Project	Future W/ Project W/ Mitigation
No. of Phases	0	0	0	0	0
Opposed Ø'ing: N/S-1, E/W-2 or Both-3?	0	0	0	0	0
Right Turns: FREE-1, NRTOR-2 or OLA-3?	NB-- 0 SB-- 0 EB-- 0 WB-- 0	NB-- 0 SB-- 0 EB-- 0 WB-- 0	NB-- 0 SB-- 0 EB-- 0 WB-- 0	NB-- 0 SB-- 0 EB-- 0 WB-- 0	NB-- 0 SB-- 0 EB-- 0 WB-- 0
ATSAC-1 or ATSAC+ATCS-2?	0	0	0	0	0
Override Capacity	1200	1200	1200	1200	1200

	MOVEMENT	Existing Condition Volume	Existing Condition No. of Lanes	Existing Condition Lane Volume	Existing Plus Project Project Traffic	Existing Plus Project Total Volume	Existing Plus Project Lane Volume	Future Condition W/O Project Added Volume	Future Condition W/O Project Total Volume	Future Condition W/O Project No. of Lanes	Future Condition W/O Project Lane Volume	Future Condition W/ Project Added Volume	Future Condition W/ Project Total Volume	Future Condition W/ Project No. of Lanes	Future Condition W/ Project Lane Volume	Future W/ Project W/ Mitigation Added Volume	Future W/ Project W/ Mitigation Total Volume	Future W/ Project W/ Mitigation No. of Lanes	Future W/ Project W/ Mitigation Lane Volume
NORTHBOUND	Left	0	0	**0**	0	0	**0**	0	0	0	**0**	0	0	0	**0**	0	0	0	**0**
	Left-Through		0							0				0				0	
	Through	0	0	0	0	0	0	0	0	0	0	0	0	0	0	0	0	0	0
	Through-Right		0							0				0				0	
	Right	0	0	0	0	0	0	0	0	0	0	0	0	0	0	0	0	0	0
	Left-Through-Right		0							0				0				0	
	Left-Right		0							0				0				0	
SOUTHBOUND	Left	10	0	10	0	10	10	0	10	0	10	0	10	0	10	0	10	0	10
	Left-Through		0							0				0				0	
	Through	4	0	**43**	0	4	**43**	0	4	0	**44**	0	4	0	**44**	0	4	0	**44**
	Through-Right		0							0				0				0	
	Right	29	0	0	0	29	0	0	30	0	0	0	30	0	0	0	30	0	0
	Left-Through-Right		1							1				1				1	
	Left-Right		0							0				0				0	
EASTBOUND	Left	42	1	42	0	42	42	0	44	1	44	0	44	1	44	0	44	1	44
	Left-Through		0							0				0				0	
	Through	970	1	**597**	30	1000	**612**	0	1014	1	**624**	30	1044	1	**639**	0	1044	1	**639**
	Through-Right		1							1				1				1	
	Right	223	0	223	0	223	223	0	233	0	233	0	233	0	233	0	233	0	233
	Left-Through-Right		0							0				0				0	
	Left-Right		0							0				0				0	
WESTBOUND	Left	131	1	**131**	30	161	**161**	0	137	1	**137**	30	167	1	**167**	0	167	1	**167**
	Left-Through		0							0				0				0	
	Through	817	1	415	0	817	415	0	854	1	434	0	854	1	434	0	854	1	434
	Through-Right		1							1				1				1	
	Right	13	0	13	0	13	13	0	14	0	14	0	14	0	14	0	14	0	14
	Left-Through-Right		0							0				0				0	
	Left-Right		0							0				0				0	
CRITICAL VOLUMES		North-South:		43	North-South:		43	North-South:			44	North-South:			44	North-South:			44
		East-West:		728	East-West:		773	East-West:			761	East-West:			806	East-West:			806
		SUM:		771	SUM:		816	SUM:			805	SUM:			850	SUM:			850
VOLUME/CAPACITY (V/C) RATIO:				0.643			0.680				0.671				0.708				0.708
V/C LESS ATSAC/ATCS ADJUSTMENT:				0.643			0.680				0.671				0.708				0.708
LEVEL OF SERVICE (LOS):				**B**			**B**				**B**				**C**				**C**

REMARKS: Alt. Route 3: Using only Sheldon Pit

Version: 1i Beta; 8/4/2011

PROJECT IMPACT

Change in *v/c* due to project:	0.037	Δ*v/c* after mitigation:	0.037
Significant impacted?	NO	Fully mitigated?	N/A

Level of Service Workheet
(Circular 212 Method)

I/S #:	North-South Street:	Haddon Avenue	Year of Count:	2015	Ambient Growth: (%):	1.5	Conducted by:	City Traffic Counters	Date:	4/28/2015
CMA11	East-West Street:	Sheldon Street	Projection Year:	2018	Peak Hour:	AM	Reviewed by:		Project:	Pacoima Reservoir Project/1-13-4

No. of Phases				2				2				2				2				2			2
Opposed Ø'ing: N/S-1, E/W-2 or Both-3?				0				0				0				0				0			0
Right Turns: FREE-1, NRTOR-2 or OLA-3?	NB--	0	SB--	0	NB--	0	SB--	0	NB--	0	SB--	0	NB--	0	SB--	0	NB--	0	SB--	0			
	EB--	0	WB--	0	EB--	0	WB--	0	EB--	0	WB--	0	EB--	0	WB--	0	EB--	0	WB--	0			
ATSAC-1 or ATSAC+ATCS-2?				2				2				2				2				2			2
Override Capacity				0				0				0				0				0			0

	MOVEMENT	EXISTING CONDITION			EXISTING PLUS PROJECT			FUTURE CONDITION W/O PROJECT				FUTURE CONDITION W/ PROJECT				FUTURE W/ PROJECT W/ MITIGATION			
		Volume	No. of Lanes	Lane Volume	Project Traffic	Total Volume	Lane Volume	Added Volume	Total Volume	No. of Lanes	Lane Volume	Added Volume	Total Volume	No. of Lanes	Lane Volume	Added Volume	Total Volume	No. of Lanes	Lane Volume
NORTHBOUND	Left	202	0	202	0	202	202	0	211	0	211	0	211	0	211	0	211	0	211
	Left-Through		0							0				0				0	
	Through	29	0	**282**	0	29	**282**	0	30	0	**294**	0	30	0	**294**	0	30	0	**294**
	Through-Right		0							0				0				0	
	Right	51	0	0	0	51	0	0	53	0	0	0	53	0	0	0	53	0	0
	Left-Through-Right		1							1				1				1	
	Left-Right		0							0				0				0	
SOUTHBOUND	Left	31	0	**31**	0	31	**31**	0	32	0	**32**	0	32	0	**32**	0	32	0	**32**
	Left-Through		0							0				0				0	
	Through	40	0	103	0	40	103	0	42	0	107	0	42	0	107	0	42	0	107
	Through-Right		0							0				0				0	
	Right	32	0	0	0	32	0	0	33	0	0	0	33	0	0	0	33	0	0
	Left-Through-Right		1							1				1				1	
	Left-Right		0							0				0				0	
EASTBOUND	Left	12	1	**12**	0	12	**12**	0	13	1	**13**	0	13	1	**13**	0	13	1	**13**
	Left-Through		0							0				0				0	
	Through	747	1	463	30	777	478	0	781	1	484	30	811	1	499	0	811	1	499
	Through-Right		1							1				1				1	
	Right	179	0	179	0	179	179	0	187	0	187	0	187	0	187	0	187	0	187
	Left-Through-Right		0							0				0				0	
	Left-Right		0							0				0				0	
WESTBOUND	Left	38	1	38	0	38	38	0	40	1	40	0	40	1	40	0	40	1	40
	Left-Through		0							0				0				0	
	Through	1036	1	**524**	30	1066	**539**	0	1083	1	**548**	30	1113	1	**563**	0	1113	1	**563**
	Through-Right		1							1				1				1	
	Right	11	0	11	0	11	11	0	12	0	12	0	12	0	12	0	12	0	12
	Left-Through-Right		0							0				0				0	
	Left-Right		0							0				0				0	
CRITICAL VOLUMES		*North-South:*		313	*North-South:*		313	*North-South:*			326	*North-South:*			326	*North-South:*			326
		East-West:		536	*East-West:*		551	*East-West:*			561	*East-West:*			576	*East-West:*			576
		SUM:		849	*SUM:*		864	*SUM:*			887	*SUM:*			902	*SUM:*			902
VOLUME/CAPACITY *(V/C)* RATIO:				0.566			0.576				0.591				0.601				0.601
V/C LESS ATSAC/ATCS ADJUSTMENT:				**0.466**			**0.476**				**0.491**				**0.501**				**0.501**
LEVEL OF SERVICE (LOS):				**A**			**A**				**A**				**A**				**A**

REMARKS: Alt. Route 3: Using only Sheldon Pit

Version: 1i Beta; 8/4/2011

PROJECT IMPACT

Change in *v/c* due to project:	0.010	Δ*v/c* after mitigation:	0.010
Significant impacted?	NO	Fully mitigated?	N/A

Level of Service Workheet
(Circular 212 Method)

I/S #:	North-South Street:	Haddon Avenue	Year of Count:	2015	Ambient Growth: (%):	1.5	Conducted by:	City Traffic Counters	Date:	4/28/2015
CMA11	East-West Street:	Sheldon Street	Projection Year:	2018	Peak Hour:	Mid-Day	Reviewed by:		Project:	Pacoima Reservoir Project/1-13-4

No. of Phases				2				2				2				2				2			2
Opposed Ø'ing: N/S-1, E/W-2 or Both-3?				0				0				0				0				0			0
Right Turns: FREE-1, NRTOR-2 or OLA-3?	NB--	0	SB--	0	NB--	0	SB--	0	NB--	0	SB--	0	NB--	0	SB--	0	NB--	0	SB--	0	NB--	0	SB-- 0
	EB--	0	WB--	0	EB--	0	WB--	0	EB--	0	WB--	0	EB--	0	WB--	0	EB--	0	WB--	0	EB--	0	WB-- 0
ATSAC-1 or ATSAC+ATCS-2?				2				2				2				2				2			2
Override Capacity				0				0				0				0				0			0

MOVEMENT		EXISTING CONDITION			EXISTING PLUS PROJECT			FUTURE CONDITION W/O PROJECT				FUTURE CONDITION W/ PROJECT				FUTURE W/ PROJECT W/ MITIGATION			
		Volume	No. of Lanes	Lane Volume	Project Traffic	Total Volume	Lane Volume	Added Volume	Total Volume	No. of Lanes	Lane Volume	Added Volume	Total Volume	No. of Lanes	Lane Volume	Added Volume	Total Volume	No. of Lanes	Lane Volume
NORTHBOUND	Left	56	0	**56**	0	56	**56**	0	59	0	**59**	0	59	0	**59**	0	59	0	**59**
	Left-Through		0							0				0				0	
	Through	0	0	61	0	0	61	0	0	0	64	0	0	0	64	0	0	0	64
	Through-Right		0							0				0				0	
	Right	5	0	0	0	5	0	0	5	0	0	0	5	0	0	0	5	0	0
	Left-Through-Right		1							1				1				1	
	Left-Right		0							0				0				0	
SOUTHBOUND	Left	10	0	10	0	10	10	0	10	0	10	0	10	0	10	0	10	0	10
	Left-Through		0							0				0				0	
	Through	2	0	**28**	0	2	**28**	0	2	0	**29**	0	2	0	**29**	0	2	0	**29**
	Through-Right		0							0				0				0	
	Right	16	0	0	0	16	0	0	17	0	0	0	17	0	0	0	17	0	0
	Left-Through-Right		1							1				1				1	
	Left-Right		0							0				0				0	
EASTBOUND	Left	8	1	**8**	0	8	**8**	0	8	1	**8**	0	8	1	**8**	0	8	1	**8**
	Left-Through		0							0				0				0	
	Through	599	1	316	30	629	331	0	626	1	330	30	656	1	345	0	656	1	345
	Through-Right		1							1				1				1	
	Right	32	0	32	0	32	32	0	33	0	33	0	33	0	33	0	33	0	33
	Left-Through-Right		0							0				0				0	
	Left-Right		0							0				0				0	
WESTBOUND	Left	6	1	6	0	6	6	0	6	1	6	0	6	1	6	0	6	1	6
	Left-Through		0							0				0				0	
	Through	632	1	**319**	30	662	**334**	0	661	1	**334**	30	691	1	**349**	0	691	1	**349**
	Through-Right		1							1				1				1	
	Right	6	0	6	0	6	6	0	6	0	6	0	6	0	6	0	6	0	6
	Left-Through-Right		0							0				0				0	
	Left-Right		0							0				0				0	
CRITICAL VOLUMES		*North-South:*		84	*North-South:*		84	*North-South:*			88	*North-South:*			88	*North-South:*			88
		East-West:		327	*East-West:*		342	*East-West:*			342	*East-West:*			357	*East-West:*			357
		SUM:		411	*SUM:*		426	*SUM:*			430	*SUM:*			445	*SUM:*			445
VOLUME/CAPACITY *(V/C)* RATIO:				0.274			0.284				0.287				0.297				0.297
V/C LESS ATSAC/ATCS ADJUSTMENT:				**0.174**			**0.184**				**0.187**				**0.197**				**0.197**
LEVEL OF SERVICE (LOS):				**A**			**A**				**A**				**A**				**A**

REMARKS: Alt. Route 3: Using only Sheldon Pit

Version: 1i Beta; 8/4/2011

PROJECT IMPACT

Change in *v/c* due to project:	0.010	Δ*v/c* after mitigation:	0.010
Significant impacted?	NO	Fully mitigated?	N/A

Level of Service Workheet
(Circular 212 Method)

I/S #:	North-South Street:	Haddon Avenue	Year of Count:	2015	Ambient Growth: (%):	1.5	Conducted by:	City Traffic Counters	Date:	4/28/2015
CMA11	East-West Street:	Sheldon Street	Projection Year:	2018	Peak Hour:	PM	Reviewed by:		Project:	Pacoima Reservoir Project/1-13-4

	Existing Condition	Existing Plus Project	Future Condition W/O Project	Future Condition W/ Project	Future W/ Project W/ Mitigation
No. of Phases	2	2	2	2	2
Opposed Ø'ing: N/S-1, E/W-2 or Both-3?	0	0	0	0	0
Right Turns: FREE-1, NRTOR-2 or OLA-3?	NB-- 0 SB-- 0 EB-- 0 WB-- 0	NB-- 0 SB-- 0 EB-- 0 WB-- 0	NB-- 0 SB-- 0 EB-- 0 WB-- 0	NB-- 0 SB-- 0 EB-- 0 WB-- 0	NB-- 0 SB-- 0 EB-- 0 WB-- 0
ATSAC-1 or ATSAC+ATCS-2?	2	2	2	2	2
Override Capacity	0	0	0	0	0

	MOVEMENT	Existing Condition Volume	No. of Lanes	Lane Volume	Existing Plus Project Project Traffic	Total Volume	Lane Volume	Future Condition W/O Project Added Volume	Total Volume	No. of Lanes	Lane Volume	Future Condition W/ Project Added Volume	Total Volume	No. of Lanes	Lane Volume	Future W/ Project W/ Mitigation Added Volume	Total Volume	No. of Lanes	Lane Volume
NORTHBOUND	Left	99	0	**99**	0	99	**99**	0	104	0	**104**	0	104	0	**104**	0	104	0	**104**
	Left-Through		0							0				0				0	
	Through	10	0	125	0	10	125	0	10	0	131	0	10	0	131	0	10	0	131
	Through-Right		0							0				0				0	
	Right	16	0	0	0	16	0	0	17	0	0	0	17	0	0	0	17	0	0
	Left-Through-Right		1							1				1				1	
	Left-Right		0							0				0				0	
SOUTHBOUND	Left	8	0	8	0	8	8	0	8	0	8	0	8	0	8	0	8	0	8
	Left-Through		0							0				0				0	
	Through	11	0	**37**	0	11	**37**	0	12	0	**39**	0	12	0	**39**	0	12	0	**39**
	Through-Right		0							0				0				0	
	Right	18	0	0	0	18	0	0	19	0	0	0	19	0	0	0	19	0	0
	Left-Through-Right		1							1				1				1	
	Left-Right		0							0				0				0	
EASTBOUND	Left	11	1	11	0	11	11	0	12	1	12	0	12	1	12	0	12	1	12
	Left-Through		0							0				0				0	
	Through	944	1	**520**	30	974	**535**	0	987	1	**544**	30	1017	1	**559**	0	1017	1	**559**
	Through-Right		1							1				1				1	
	Right	96	0	96	0	96	96	0	100	0	100	0	100	0	100	0	100	0	100
	Left-Through-Right		0							0				0				0	
	Left-Right		0							0				0				0	
WESTBOUND	Left	4	1	**4**	0	4	**4**	0	4	1	**4**	0	4	1	**4**	0	4	1	**4**
	Left-Through		0							0				0				0	
	Through	843	1	424	30	873	439	0	882	1	444	30	912	1	459	0	912	1	459
	Through-Right		1							1				1				1	
	Right	5	0	5	0	5	5	0	5	0	5	0	5	0	5	0	5	0	5
	Left-Through-Right		0							0				0				0	
	Left-Right		0							0				0				0	
CRITICAL VOLUMES		North-South:		136	North-South:		136	North-South:			143	North-South:			143	North-South:			143
		East-West:		524	East-West:		539	East-West:			548	East-West:			563	East-West:			563
		SUM:		660	SUM:		675	SUM:			691	SUM:			706	SUM:			706
VOLUME/CAPACITY (V/C) RATIO:				0.440			0.450				0.461				0.471				0.471
V/C LESS ATSAC/ATCS ADJUSTMENT:				**0.340**			**0.350**				**0.361**				**0.371**				**0.371**
LEVEL OF SERVICE (LOS):				**A**			**A**				**A**				**A**				**A**

REMARKS: Alt. Route 3: Using only Sheldon Pit

Version: 1i Beta; 8/4/2011

PROJECT IMPACT

Change in *v/c* due to project:	0.010	Δ*v/c* after mitigation:	0.010
Significant impacted?	NO	Fully mitigated?	N/A

Level of Service Workheet
(Circular 212 Method)

I/S #:	North-South Street:	Telfair Avenue	Year of Count:	2015	Ambient Growth: (%):	1.5	Conducted by:	City Traffic Counters	Date:	4/28/2015
CMA12	East-West Street:	Sheldon Street	Projection Year:	2018	Peak Hour:	AM	Reviewed by:		Project:	Pacoima Reservoir Project/1-13-4

No. of Phases				2				2				2				2				2		
Opposed Ø'ing: N/S-1, E/W-2 or Both-3?				0				0				0				0				0		
Right Turns: FREE-1, NRTOR-2 or OLA-3?	NB--	0	SB--	0	NB--	0	SB--	0	NB--	0	SB--	0	NB--	0	SB--	0	NB--	0	SB--	0	NB--	0	SB--	0
	EB--	0	WB--	0	EB--	0	WB--	0	EB--	0	WB--	0	EB--	0	WB--	0	EB--	0	WB--	0	EB--	0	WB--	0
ATSAC-1 or ATSAC+ATCS-2?				2				2				2				2				2		
Override Capacity				0				0				0				0				0		

	MOVEMENT	EXISTING CONDITION			EXISTING PLUS PROJECT			FUTURE CONDITION W/O PROJECT				FUTURE CONDITION W/ PROJECT				FUTURE W/ PROJECT W/ MITIGATION			
		Volume	No. of Lanes	Lane Volume	Project Traffic	Total Volume	Lane Volume	Added Volume	Total Volume	No. of Lanes	Lane Volume	Added Volume	Total Volume	No. of Lanes	Lane Volume	Added Volume	Total Volume	No. of Lanes	Lane Volume
NORTHBOUND	Left	134	0	134	0	134	134	0	140	0	140	0	140	0	140	0	140	0	140
	Left-Through		0							0				0				0	
	Through	22	0	**217**	0	22	**217**	0	23	0	**227**	0	23	0	**227**	0	23	0	**227**
	Through-Right		0							0				0				0	
	Right	61	0	0	0	61	0	0	64	0	0	0	64	0	0	0	64	0	0
	Left-Through-Right		1							1				1				1	
	Left-Right		0							0				0				0	
SOUTHBOUND	Left	11	0	**11**	0	11	**11**	0	12	0	**12**	0	12	0	**12**	0	12	0	**12**
	Left-Through		0							0				0				0	
	Through	48	0	89	0	48	89	0	50	0	93	0	50	0	93	0	50	0	93
	Through-Right		0							0				0				0	
	Right	30	0	0	0	30	0	0	31	0	0	0	31	0	0	0	31	0	0
	Left-Through-Right		1							1				1				1	
	Left-Right		0							0				0				0	
EASTBOUND	Left	5	0	**5**	0	5	**5**	0	5	0	**5**	0	5	0	**5**	0	5	0	**5**
	Left-Through		1							1				1				1	
	Through	589	0	380	30	619	395	0	616	0	397	30	646	0	412	0	646	0	412
	Through-Right		1							1				1				1	
	Right	151	0	380	0	151	395	0	158	0	397	0	158	0	412	0	158	0	412
	Left-Through-Right		0							0				0				0	
	Left-Right		0							0				0				0	
WESTBOUND	Left	139	0	139	0	139	139	0	145	0	145	0	145	0	145	0	145	0	145
	Left-Through		1							1				1				1	
	Through	842	0	**715**	30	872	**730**	0	880	0	**746**	30	910	0	**761**	0	910	0	**761**
	Through-Right		1							1				1				1	
	Right	31	0	715	0	31	730	0	32	0	746	0	32	0	761	0	32	0	761
	Left-Through-Right		0							0				0				0	
	Left-Right		0							0				0				0	
CRITICAL VOLUMES			*North-South:*	228		*North-South:*	228		*North-South:*	239			*North-South:*	239			*North-South:*	239	
			East-West:	720		*East-West:*	735		*East-West:*	751			*East-West:*	766			*East-West:*	766	
			SUM:	948		*SUM:*	963		*SUM:*	990			*SUM:*	1005			*SUM:*	1005	
VOLUME/CAPACITY *(V/C)* RATIO:				0.632			0.642				0.660				0.670				0.670
V/C LESS ATSAC/ATCS ADJUSTMENT:				**0.532**			**0.542**				**0.560**				**0.570**				**0.570**
LEVEL OF SERVICE (LOS):				**A**			**A**				**A**				**A**				**A**

REMARKS: Alt. Route 3: Using only Sheldon Pit

Version: 1i Beta; 8/4/2011

PROJECT IMPACT

Change in *v/c* due to project:	0.010	Δ*v/c* after mitigation:	0.010
Significant impacted?	NO	Fully mitigated?	N/A

Level of Service Workheet
(Circular 212 Method)

I/S #:	North-South Street:	Telfair Avenue	Year of Count:	2015	Ambient Growth: (%):	1.5	Conducted by:	City Traffic Counters	Date:	4/28/2015
CMA12	East-West Street:	Sheldon Street	Projection Year:	2018	Peak Hour:	Mid-Day	Reviewed by:		Project:	Pacoima Reservoir Project/1-13-4

No. of Phases				2				2				2				2				2
Opposed Ø'ing: N/S-1, E/W-2 or Both-3?				0				0				0				0				0
Right Turns: FREE-1, NRTOR-2 or OLA-3?	NB-- 0	SB--		0	NB-- 0	SB--		0	NB-- 0	SB--		0	NB-- 0	SB--		0	NB-- 0	SB--		0
	EB-- 0	WB--		0	EB-- 0	WB--		0	EB-- 0	WB--		0	EB-- 0	WB--		0	EB-- 0	WB--		0
ATSAC-1 or ATSAC+ATCS-2?				2				2				2				2				2
Override Capacity				0				0				0				0				0

	MOVEMENT	EXISTING CONDITION			EXISTING PLUS PROJECT			FUTURE CONDITION W/O PROJECT				FUTURE CONDITION W/ PROJECT				FUTURE W/ PROJECT W/ MITIGATION			
		Volume	No. of Lanes	Lane Volume	Project Traffic	Total Volume	Lane Volume	Added Volume	Total Volume	No. of Lanes	Lane Volume	Added Volume	Total Volume	No. of Lanes	Lane Volume	Added Volume	Total Volume	No. of Lanes	Lane Volume
NORTHBOUND	Left	37	0	37	0	37	37	0	39	0	39	0	39	0	39	0	39	0	39
	Left-Through		0							0				0				0	
	Through	4	0	**59**	0	4	**59**	0	4	0	**62**	0	4	0	**62**	0	4	0	**62**
	Through-Right		0							0				0				0	
	Right	18	0	0	0	18	0	0	19	0	0	0	19	0	0	0	19	0	0
	Left-Through-Right		1							1				1				1	
	Left-Right		0							0				0				0	
SOUTHBOUND	Left	0	0	**0**	0	0	**0**	0	0	0	**0**	0	0	0	**0**	0	0	0	**0**
	Left-Through		0							0				0				0	
	Through	2	0	17	0	2	17	0	2	0	18	0	2	0	18	0	2	0	18
	Through-Right		0							0				0				0	
	Right	15	0	0	0	15	0	0	16	0	0	0	16	0	0	0	16	0	0
	Left-Through-Right		1							1				1				1	
	Left-Right		0							0				0				0	
EASTBOUND	Left	6	0	6	0	6	6	0	6	0	6	0	6	0	6	0	6	0	6
	Left-Through		1							1				1				1	
	Through	559	0	**302**	30	589	**317**	0	585	0	**315**	30	615	0	**330**	0	615	0	**330**
	Through-Right		1							1				1				1	
	Right	32	0	302	0	32	317	0	33	0	315	0	33	0	330	0	33	0	330
	Left-Through-Right		0							0				0				0	
	Left-Right		0							0				0				0	
WESTBOUND	Left	32	0	**32**	0	32	**32**	0	33	0	**33**	0	33	0	**33**	0	33	0	**33**
	Left-Through		1							1				1				1	
	Through	497	0	295	30	527	342	0	520	0	341	30	550	0	356	0	550	0	356
	Through-Right		1							1				1				1	
	Right	28	0	295	0	28	342	0	29	0	341	0	29	0	356	0	29	0	356
	Left-Through-Right		0							0				0				0	
	Left-Right		0							0				0				0	
CRITICAL VOLUMES		*North-South:*		59	*North-South:*		59	*North-South:*			62	*North-South:*			62	*North-South:*			62
		East-West:		334	*East-West:*		349	*East-West:*			348	*East-West:*			363	*East-West:*			363
		SUM:		393	*SUM:*		408	*SUM:*			410	*SUM:*			425	*SUM:*			425
VOLUME/CAPACITY *(V/C)* RATIO:				0.262			0.272				0.273				0.283				0.283
V/C LESS ATSAC/ATCS ADJUSTMENT:				**0.162**			**0.172**				**0.173**				**0.183**				**0.183**
LEVEL OF SERVICE (LOS):				**A**			**A**				**A**				**A**				**A**

REMARKS: Alt. Route 3: Using only Sheldon Pit

Version: 1i Beta; 8/4/2011

PROJECT IMPACT

Change in *v/c* due to project:	0.010	Δ*v/c* after mitigation:	0.010
Significant impacted?	NO	Fully mitigated?	N/A

Level of Service Workheet
(Circular 212 Method)

I/S #:	North-South Street:	Telfair Avenue	Year of Count:	2015	Ambient Growth: (%):	1.5	Conducted by:	City Traffic Counters	Date:	4/28/2015
CMA12	East-West Street:	Sheldon Street	Projection Year:	2018	Peak Hour:	PM	Reviewed by:		Project:	Pacoima Reservoir Project/1-13-4

No. of Phases				2				2				2				2				2			
Opposed Ø'ing: N/S-1, E/W-2 or Both-3?				0				0				0				0				0			
Right Turns: FREE-1, NRTOR-2 or OLA-3?	NB--	0	SB--	0	NB--	0	SB--	0	NB--	0	SB--	0	NB--	0	SB--	0	NB--	0	SB--	0			
	EB--	0	WB--	0	EB--	0	WB--	0	EB--	0	WB--	0	EB--	0	WB--	0	EB--	0	WB--	0			
ATSAC-1 or ATSAC+ATCS-2?				2				2				2				2				2			
Override Capacity				0				0				0				0				0			

MOVEMENT		EXISTING CONDITION			EXISTING PLUS PROJECT			FUTURE CONDITION W/O PROJECT				FUTURE CONDITION W/ PROJECT				FUTURE W/ PROJECT W/ MITIGATION			
		Volume	No. of Lanes	Lane Volume	Project Traffic	Total Volume	Lane Volume	Added Volume	Total Volume	No. of Lanes	Lane Volume	Added Volume	Total Volume	No. of Lanes	Lane Volume	Added Volume	Total Volume	No. of Lanes	Lane Volume
NORTHBOUND	Left	90	0	90	0	90	90	0	94	0	94	0	94	0	94	0	94	0	94
	Left-Through		0							0				0				0	
	Through	7	0	**149**	0	7	**149**	0	7	0	**155**	0	7	0	**155**	0	7	0	**155**
	Through-Right		0							0				0				0	
	Right	52	0	0	0	52	0	0	54	0	0	0	54	0	0	0	54	0	0
	Left-Through-Right		1							1				1				1	
	Left-Right		0							0				0				0	
SOUTHBOUND	Left	4	0	**4**	0	4	**4**	0	4	0	**4**	0	4	0	**4**	0	4	0	**4**
	Left-Through		0							0				0				0	
	Through	6	0	37	0	6	37	0	6	0	38	0	6	0	38	0	6	0	38
	Through-Right		0							0				0				0	
	Right	27	0	0	0	27	0	0	28	0	0	0	28	0	0	0	28	0	0
	Left-Through-Right		1							1				1				1	
	Left-Right		0							0				0				0	
EASTBOUND	Left	10	0	10	0	10	10	0	10	0	10	0	10	0	10	0	10	0	10
	Left-Through		1							1				1				1	
	Through	739	0	**446**	30	769	**461**	0	773	0	**465**	30	803	0	**480**	0	803	0	**480**
	Through-Right		1							1				1				1	
	Right	112	0	446	0	112	461	0	117	0	465	0	117	0	480	0	117	0	480
	Left-Through-Right		0							0				0				0	
	Left-Right		0							0				0				0	
WESTBOUND	Left	54	0	**54**	0	54	**54**	0	56	0	**56**	0	56	0	**56**	0	56	0	**56**
	Left-Through		1							1				1				1	
	Through	647	0	437	30	677	452	0	677	0	457	30	707	0	472	0	707	0	472
	Through-Right		1							1				1				1	
	Right	11	0	437	0	11	452	0	12	0	457	0	12	0	472	0	12	0	472
	Left-Through-Right		0							0				0				0	
	Left-Right		0							0				0				0	
CRITICAL VOLUMES			*North-South:*	153		*North-South:*	153			*North-South:*	159			*North-South:*	159			*North-South:*	159
			East-West:	500		*East-West:*	515			*East-West:*	521			*East-West:*	536			*East-West:*	536
			SUM:	653		*SUM:*	668			*SUM:*	680			*SUM:*	695			*SUM:*	695
VOLUME/CAPACITY *(V/C)* RATIO:				0.435			0.445				0.453				0.463				0.463
V/C LESS ATSAC/ATCS ADJUSTMENT:				**0.335**			**0.345**				**0.353**				**0.363**				**0.363**
LEVEL OF SERVICE (LOS):				**A**			**A**				**A**				**A**				**A**

REMARKS: Alt. Route 3: Using only Sheldon Pit

Version: 1i Beta; 8/4/2011

PROJECT IMPACT

Change in *v/c* due to project:	0.010	Δ*v/c* after mitigation:	0.010
Significant impacted?	NO	Fully mitigated?	N/A

Level of Service Workheet
(Circular 212 Method)

I/S #:	North-South Street:	San Fernando Road	Year of Count:	2015	Ambient Growth: (%):	1.5	Conducted by:	City Traffic Counters	Date:	4/28/2015
CMA13	East-West Street:	Sheldon Street	Projection Year:	2018	Peak Hour:	AM	Reviewed by:		Project:	Pacoima Reservoir Project/1-13-4

No. of Phases				4				4				4				4				4			4
Opposed Ø'ing: N/S-1, E/W-2 or Both-3?				0				0				0				0				0			0
Right Turns: FREE-1, NRTOR-2 or OLA-3?	NB--	0	SB--	0	NB--	0	SB--	0	NB--	0	SB--	0	NB--	0	SB--	0	NB--	0	SB--	0			
	EB--	0	WB--	0	EB--	0	WB--	0	EB--	0	WB--	0	EB--	0	WB--	0	EB--	0	WB--	0			
ATSAC-1 or ATSAC+ATCS-2?				2				2				2				2				2			2
Override Capacity				0				0				0				0				0			0

	MOVEMENT	EXISTING CONDITION			EXISTING PLUS PROJECT			FUTURE CONDITION W/O PROJECT				FUTURE CONDITION W/ PROJECT				FUTURE W/ PROJECT W/ MITIGATION			
		Volume	No. of Lanes	Lane Volume	Project Traffic	Total Volume	Lane Volume	Added Volume	Total Volume	No. of Lanes	Lane Volume	Added Volume	Total Volume	No. of Lanes	Lane Volume	Added Volume	Total Volume	No. of Lanes	Lane Volume
NORTHBOUND	Left	178	1	**178**	0	178	178	0	186	1	**186**	0	186	1	**186**	0	186	1	**186**
	Left-Through		0							0				0				0	
	Through	728	1	403	0	728	**403**	4	765	1	423	0	765	1	423	0	765	1	423
	Through-Right		1							1				1				1	
	Right	77	0	77	0	77	77	0	81	0	81	0	81	0	81	0	81	0	81
	Left-Through-Right		0							0				0				0	
	Left-Right		0							0				0				0	
SOUTHBOUND	Left	97	1	97	20	117	**117**	0	101	1	101	20	121	1	121	0	121	1	121
	Left-Through		0							0				0				0	
	Through	558	1	**339**	0	558	339	8	591	1	**358**	0	591	1	**358**	0	591	1	**358**
	Through-Right		1							1				1				1	
	Right	119	0	119	0	119	119	0	124	0	124	0	124	0	124	0	124	0	124
	Left-Through-Right		0							0				0				0	
	Left-Right		0							0				0				0	
EASTBOUND	Left	53	1	**53**	0	53	**53**	0	55	1	**55**	0	55	1	**55**	0	55	1	**55**
	Left-Through		0							0				0				0	
	Through	433	1	292	30	463	307	0	453	1	305	30	483	1	320	0	483	1	320
	Through-Right		1							1				1				1	
	Right	150	0	150	0	150	150	0	157	0	157	0	157	0	157	0	157	0	157
	Left-Through-Right		0							0				0				0	
	Left-Right		0							0				0				0	
WESTBOUND	Left	144	1	144	0	144	144	0	151	1	151	0	151	1	151	0	151	1	151
	Left-Through		0							0				0				0	
	Through	1022	1	**581**	30	1052	**606**	0	1069	1	**607**	30	1099	1	**632**	0	1099	1	**632**
	Through-Right		1							1				1				1	
	Right	139	0	139	20	159	159	0	145	0	145	20	165	0	165	0	165	0	165
	Left-Through-Right		0							0				0				0	
	Left-Right		0							0				0				0	
CRITICAL VOLUMES		*North-South:*		517	*North-South:*		520	*North-South:*			544	*North-South:*			544	*North-South:*			544
		East-West:		634	*East-West:*		659	*East-West:*			662	*East-West:*			687	*East-West:*			687
		SUM:		1151	*SUM:*		1179	*SUM:*			1206	*SUM:*			1231	*SUM:*			1231
VOLUME/CAPACITY *(V/C)* RATIO:				0.837			0.857				0.877				0.895				0.895
V/C LESS ATSAC/ATCS ADJUSTMENT:				**0.737**			**0.757**				**0.777**				**0.795**				**0.795**
LEVEL OF SERVICE (LOS):				**C**			**C**				**C**				**C**				**C**

REMARKS: Alt. Route 3: Using only Sheldon Pit

Version: 1i Beta; 8/4/2011

PROJECT IMPACT

Change in *v/c* due to project:	0.018	Δ*v/c* after mitigation:	0.018
Significant impacted?	NO	Fully mitigated?	N/A

Level of Service Workheet
(Circular 212 Method)

I/S #:	North-South Street:	San Fernando Road	Year of Count:	2015	Ambient Growth: (%):	1.5	Conducted by:	City Traffic Counters	Date:	4/28/2015
CMA13	East-West Street:	Sheldon Street	Projection Year:	2018	Peak Hour:	Mid-Day	Reviewed by:		Project:	Pacoima Reservoir Project/1-13-4

No. of Phases				4				4				4				4				4			4
Opposed Ø'ing: N/S-1, E/W-2 or Both-3?				0				0				0				0				0			0
Right Turns: FREE-1, NRTOR-2 or OLA-3?	NB--	0	SB--	0	NB--	0	SB--	0	NB--	0	SB--	0	NB--	0	SB--	0	NB--	0	SB--	0	NB--	0	SB-- 0
	EB--	0	WB--	0	EB--	0	WB--	0	EB--	0	WB--	0	EB--	0	WB--	0	EB--	0	WB--	0	EB--	0	WB-- 0
ATSAC-1 or ATSAC+ATCS-2?				2				2				2				2				2			2
Override Capacity				0				0				0				0				0			0

	MOVEMENT	EXISTING CONDITION			EXISTING PLUS PROJECT			FUTURE CONDITION W/O PROJECT				FUTURE CONDITION W/ PROJECT				FUTURE W/ PROJECT W/ MITIGATION			
		Volume	No. of Lanes	Lane Volume	Project Traffic	Total Volume	Lane Volume	Added Volume	Total Volume	No. of Lanes	Lane Volume	Added Volume	Total Volume	No. of Lanes	Lane Volume	Added Volume	Total Volume	No. of Lanes	Lane Volume
NORTHBOUND	Left	121	1	**121**	0	121	**121**	0	127	1	**127**	0	127	1	**127**	0	127	1	**127**
	Left-Through		0							0				0				0	
	Through	389	1	236	0	389	236	8	415	1	251	0	415	1	251	0	415	1	251
	Through-Right		1							1				1				1	
	Right	82	0	82	0	82	82	0	86	0	86	0	86	0	86	0	86	0	86
	Left-Through-Right		0							0				0				0	
	Left-Right		0							0				0				0	
SOUTHBOUND	Left	70	1	70	20	90	90	0	73	1	73	20	93	1	93	0	93	1	93
	Left-Through		0							0				0				0	
	Through	356	1	**209**	0	356	**209**	6	378	1	**222**	0	378	1	**222**	0	378	1	**222**
	Through-Right		1							1				1				1	
	Right	62	0	62	0	62	62	0	65	0	65	0	65	0	65	0	65	0	65
	Left-Through-Right		0							0				0				0	
	Left-Right		0							0				0				0	
EASTBOUND	Left	65	1	65	0	65	65	0	68	1	68	0	68	1	68	0	68	1	68
	Left-Through		0							0				0				0	
	Through	465	1	**288**	30	495	**303**	0	486	1	**301**	30	516	1	**316**	0	516	1	**316**
	Through-Right		1							1				1				1	
	Right	111	0	111	0	111	111	0	116	0	116	0	116	0	116	0	116	0	116
	Left-Through-Right		0							0				0				0	
	Left-Right		0							0				0				0	
WESTBOUND	Left	84	1	**84**	0	84	**84**	0	88	1	**88**	0	88	1	**88**	0	88	1	**88**
	Left-Through		0							0				0				0	
	Through	441	1	260	30	471	285	0	461	1	272	30	491	1	297	0	491	1	297
	Through-Right		1							1				1				1	
	Right	78	0	78	20	98	98	0	82	0	82	20	102	0	102	0	102	0	102
	Left-Through-Right		0							0				0				0	
	Left-Right		0							0				0				0	
CRITICAL VOLUMES		*North-South:*		330	*North-South:*		330	*North-South:*			349	*North-South:*			349	*North-South:*			349
		East-West:		372	*East-West:*		387	*East-West:*			389	*East-West:*			404	*East-West:*			404
		SUM:		702	*SUM:*		717	*SUM:*			738	*SUM:*			753	*SUM:*			753
VOLUME/CAPACITY *(V/C)* RATIO:				0.511			0.521				0.537				0.548				0.548
V/C LESS ATSAC/ATCS ADJUSTMENT:				**0.411**			**0.421**				**0.437**				**0.448**				**0.448**
LEVEL OF SERVICE (LOS):				**A**			**A**				**A**				**A**				**A**

REMARKS: Alt. Route 3: Using only Sheldon Pit

Version: 1i Beta; 8/4/2011

PROJECT IMPACT

Change in *v/c* due to project:	0.011	Δ*v/c* after mitigation:	0.011
Significant impacted?	NO	Fully mitigated?	N/A

Level of Service Workheet
(Circular 212 Method)

I/S #:	North-South Street:	San Fernando Road	Year of Count:	2015	Ambient Growth: (%):	1.5	Conducted by:	City Traffic Counters	Date:	4/28/2015
CMA13	East-West Street:	Sheldon Street	Projection Year:	2018	Peak Hour:	PM	Reviewed by:		Project:	Pacoima Reservoir Project/1-13-4

No. of Phases				4				4				4				4				4			4
Opposed Ø'ing: N/S-1, E/W-2 or Both-3?				0				0				0				0				0			0
Right Turns: FREE-1, NRTOR-2 or OLA-3?	NB--	0	SB--	0	NB--	0	SB--	0	NB--	0	SB--	0	NB--	0	SB--	0	NB--	0	SB--	0			
	EB--	0	WB--	0	EB--	0	WB--	0	EB--	0	WB--	0	EB--	0	WB--	0	EB--	0	WB--	0			
ATSAC-1 or ATSAC+ATCS-2?				2				2				2				2				2			2
Override Capacity				0				0				0				0				0			0

	MOVEMENT	EXISTING CONDITION			EXISTING PLUS PROJECT			FUTURE CONDITION W/O PROJECT				FUTURE CONDITION W/ PROJECT				FUTURE W/ PROJECT W/ MITIGATION			
		Volume	No. of Lanes	Lane Volume	Project Traffic	Total Volume	Lane Volume	Added Volume	Total Volume	No. of Lanes	Lane Volume	Added Volume	Total Volume	No. of Lanes	Lane Volume	Added Volume	Total Volume	No. of Lanes	Lane Volume
NORTHBOUND	Left	191	1	**191**	0	191	**191**	0	200	1	**200**	0	200	1	**200**	0	200	1	**200**
	Left-Through		0							0				0				0	
	Through	553	1	332	0	553	332	8	586	1	351	0	586	1	351	0	586	1	351
	Through-Right		1							1				1				1	
	Right	110	0	110	0	110	110	0	115	0	115	0	115	0	115	0	115	0	115
	Left-Through-Right		0							0				0				0	
	Left-Right		0							0				0				0	
SOUTHBOUND	Left	94	1	94	20	114	114	0	98	1	98	20	118	1	118	0	118	1	118
	Left-Through		0							0				0				0	
	Through	573	1	**315**	0	573	**315**	6	605	1	**332**	0	605	1	**332**	0	605	1	**332**
	Through-Right		1							1				1				1	
	Right	56	0	56	0	56	56	0	59	0	59	0	59	0	59	0	59	0	59
	Left-Through-Right		0							0				0				0	
	Left-Right		0							0				0				0	
EASTBOUND	Left	86	1	86	0	86	86	0	90	1	90	0	90	1	90	0	90	1	90
	Left-Through		0							0				0				0	
	Through	734	1	**436**	30	764	**451**	0	768	1	**456**	30	798	1	**471**	0	798	1	**471**
	Through-Right		1							1				1				1	
	Right	138	0	138	0	138	138	0	144	0	144	0	144	0	144	0	144	0	144
	Left-Through-Right		0							0				0				0	
	Left-Right		0							0				0				0	
WESTBOUND	Left	97	1	**97**	0	97	**97**	0	101	1	**101**	0	101	1	**101**	0	101	1	**101**
	Left-Through		0							0				0				0	
	Through	541	1	313	30	571	338	0	566	1	327	30	596	1	352	0	596	1	352
	Through-Right		1							1				1				1	
	Right	84	0	84	20	104	104	0	88	0	88	20	108	0	108	0	108	0	108
	Left-Through-Right		0							0				0				0	
	Left-Right		0							0				0				0	
CRITICAL VOLUMES		*North-South:*		506	*North-South:*		506	*North-South:*			532	*North-South:*			532	*North-South:*			532
		East-West:		533	*East-West:*		548	*East-West:*			557	*East-West:*			572	*East-West:*			572
		SUM:		1039	*SUM:*		1054	*SUM:*			1089	*SUM:*			1104	*SUM:*			1104
VOLUME/CAPACITY *(V/C)* RATIO:				0.756			0.767				0.792				0.803				0.803
V/C LESS ATSAC/ATCS ADJUSTMENT:				**0.656**			**0.667**				**0.692**				**0.703**				**0.703**
LEVEL OF SERVICE (LOS):				**B**			**B**				**B**				**C**				**C**

REMARKS: Alt. Route 3: Using only Sheldon Pit

Version: 1i Beta; 8/4/2011

PROJECT IMPACT

Change in *v/c* due to project:	0.011	Δ*v/c* after mitigation:	0.011
Significant impacted?	NO	Fully mitigated?	N/A

Level of Service Workheet
(Circular 212 Method)

I/S #:	North-South Street:	Glenoaks Boulevard	Year of Count:	2015	Ambient Growth: (%):	1.5	Conducted by:	City Traffic Counters	Date:	5/8/2015
CMA14	East-West Street:	Sheldon Street	Projection Year:	2018	Peak Hour:	AM	Reviewed by:		Project:	Pacoima Reservoir Project/1-13-4

No. of Phases				2				2				2				2				2			2
Opposed Ø'ing: N/S-1, E/W-2 or Both-3?				0				0				0				0				0			0
Right Turns: FREE-1, NRTOR-2 or OLA-3?	NB--	0	SB--	0	NB--	0	SB--	0	NB--	0	SB--	0	NB--	0	SB--	0	NB--	0	SB--	0	NB--	0	SB-- 0
	EB--	0	WB--	0	EB--	0	WB--	0	EB--	0	WB--	0	EB--	0	WB--	0	EB--	0	WB--	0	EB--	0	WB-- 0
ATSAC-1 or ATSAC+ATCS-2?				2				2				2				2				2			2
Override Capacity				0				0				0				0				0			0

MOVEMENT		EXISTING CONDITION			EXISTING PLUS PROJECT			FUTURE CONDITION W/O PROJECT				FUTURE CONDITION W/ PROJECT				FUTURE W/ PROJECT W/ MITIGATION			
		Volume	No. of Lanes	Lane Volume	Project Traffic	Total Volume	Lane Volume	Added Volume	Total Volume	No. of Lanes	Lane Volume	Added Volume	Total Volume	No. of Lanes	Lane Volume	Added Volume	Total Volume	No. of Lanes	Lane Volume
NORTHBOUND	Left	129	1	**129**	0	129	**129**	0	135	1	**135**	0	135	1	**135**	0	135	1	**135**
	Left-Through		0							0				0				0	
	Through	400	2	200	0	400	200	14	432	2	216	0	432	2	216	0	432	2	216
	Through-Right		0							0				0				0	
	Right	57	1	17	0	57	17	0	60	1	18	0	60	1	18	0	60	1	18
	Left-Through-Right		0							0				0				0	
	Left-Right		0							0				0				0	
SOUTHBOUND	Left	108	1	108	0	108	108	34	147	1	147	0	147	1	147	0	147	1	147
	Left-Through		0							0				0				0	
	Through	1154	1	**724**	0	1154	**724**	22	1229	1	**768**	0	1229	1	**768**	0	1229	1	**768**
	Through-Right		1							1				1				1	
	Right	293	0	293	0	293	293	0	306	0	306	0	306	0	306	0	306	0	306
	Left-Through-Right		0							0				0				0	
	Left-Right		0							0				0				0	
EASTBOUND	Left	202	1	**202**	0	202	**202**	0	211	1	**211**	0	211	1	**211**	0	211	1	**211**
	Left-Through		0							0				0				0	
	Through	250	1	182	50	300	207	0	261	1	190	50	311	1	215	0	311	1	215
	Through-Right		1							1				1				1	
	Right	113	0	113	0	113	113	0	118	0	118	0	118	0	118	0	118	0	118
	Left-Through-Right		0							0				0				0	
	Left-Right		0							0				0				0	
WESTBOUND	Left	81	1	81	0	81	81	0	85	1	85	0	85	1	85	0	85	1	85
	Left-Through		0							0				0				0	
	Through	444	1	**256**	50	494	**281**	0	464	1	**285**	50	514	1	**310**	0	514	1	**310**
	Through-Right		1							1				1				1	
	Right	68	0	68	0	68	68	34	105	0	105	0	105	0	105	0	105	0	105
	Left-Through-Right		0							0				0				0	
	Left-Right		0							0				0				0	
CRITICAL VOLUMES		*North-South:*		853	*North-South:*		853	*North-South:*			903	*North-South:*			903	*North-South:*			903
		East-West:		458	*East-West:*		483	*East-West:*			496	*East-West:*			521	*East-West:*			521
		SUM:		1311	*SUM:*		1336	*SUM:*			1399	*SUM:*			1424	*SUM:*			1424
VOLUME/CAPACITY *(V/C)* RATIO:				0.874			0.891				0.933				0.949				0.949
V/C LESS ATSAC/ATCS ADJUSTMENT:				**0.774**			**0.791**				**0.833**				**0.849**				**0.849**
LEVEL OF SERVICE (LOS):				**C**			**C**				**D**				**D**				**D**

REMARKS: Alt. Route 3: Using only Sheldon Pit

Version: 1i Beta; 8/4/2011

PROJECT IMPACT

Change in *v/c* due to project:	0.016	Δ*v/c* after mitigation:	0.016
Significant impacted?	NO	Fully mitigated?	N/A

Level of Service Workheet
(Circular 212 Method)

I/S #:	North-South Street:	Glenoaks Boulevard	Year of Count:	2015	Ambient Growth: (%):	1.5	Conducted by:	City Traffic Counters	Date:	5/8/2015
CMA14	East-West Street:	Sheldon Street	Projection Year:	2018	Peak Hour:	Mid-Day	Reviewed by:		Project:	Pacoima Reservoir Project/1-13-4

No. of Phases				2				2				2				2				2			2
Opposed Ø'ing: N/S-1, E/W-2 or Both-3?				0				0				0				0				0			0
Right Turns: FREE-1, NRTOR-2 or OLA-3?	NB--	0	SB--	0	NB--	0	SB--	0	NB--	0	SB--	0	NB--	0	SB--	0	NB--	0	SB--	0	NB--	0	SB-- 0
	EB--	0	WB--	0	EB--	0	WB--	0	EB--	0	WB--	0	EB--	0	WB--	0	EB--	0	WB--	0	EB--	0	WB-- 0
ATSAC-1 or ATSAC+ATCS-2?				2				2				2				2				2			2
Override Capacity				0				0				0				0				0			0

MOVEMENT		EXISTING CONDITION			EXISTING PLUS PROJECT			FUTURE CONDITION W/O PROJECT				FUTURE CONDITION W/ PROJECT				FUTURE W/ PROJECT W/ MITIGATION			
		Volume	No. of Lanes	Lane Volume	Project Traffic	Total Volume	Lane Volume	Added Volume	Total Volume	No. of Lanes	Lane Volume	Added Volume	Total Volume	No. of Lanes	Lane Volume	Added Volume	Total Volume	No. of Lanes	Lane Volume
NORTHBOUND	Left	186	1	**186**	0	186	**186**	0	194	1	**194**	0	194	1	**194**	0	194	1	**194**
	Left-Through		0							0				0				0	
	Through	436	2	218	0	436	218	21	477	2	239	0	477	2	239	0	477	2	239
	Through-Right		0							0				0				0	
	Right	51	1	29	0	51	29	0	53	1	30	0	53	1	30	0	53	1	30
	Left-Through-Right		0							0				0				0	
	Left-Right		0							0				0				0	
SOUTHBOUND	Left	85	1	85	0	85	85	34	123	1	123	0	123	1	123	0	123	1	123
	Left-Through		0							0				0				0	
	Through	482	1	**313**	0	482	**313**	15	519	1	**335**	0	519	1	**335**	0	519	1	**335**
	Through-Right		1							1				1				1	
	Right	144	0	144	0	144	144	0	151	0	151	0	151	0	151	0	151	0	151
	Left-Through-Right		0							0				0				0	
	Left-Right		0							0				0				0	
EASTBOUND	Left	172	1	**172**	0	172	**172**	0	180	1	**180**	0	180	1	**180**	0	180	1	**180**
	Left-Through		0							0				0				0	
	Through	241	1	175	50	291	200	0	252	1	183	50	302	1	208	0	302	1	208
	Through-Right		1							1				1				1	
	Right	109	0	109	0	109	109	0	114	0	114	0	114	0	114	0	114	0	114
	Left-Through-Right		0							0				0				0	
	Left-Right		0							0				0				0	
WESTBOUND	Left	45	1	45	0	45	45	0	47	1	47	0	47	1	47	0	47	1	47
	Left-Through		0							0				0				0	
	Through	173	1	**115**	50	223	**140**	0	181	1	**137**	50	231	1	**162**	0	231	1	**162**
	Through-Right		1							1				1				1	
	Right	56	0	56	0	56	56	34	93	0	93	0	93	0	93	0	93	0	93
	Left-Through-Right		0							0				0				0	
	Left-Right		0							0				0				0	
CRITICAL VOLUMES		*North-South:*		499	*North-South:*		499	*North-South:*			529	*North-South:*			529	*North-South:*			529
		East-West:		287	*East-West:*		312	*East-West:*			317	*East-West:*			342	*East-West:*			342
		SUM:		786	*SUM:*		811	*SUM:*			846	*SUM:*			871	*SUM:*			871
VOLUME/CAPACITY *(V/C)* RATIO:				0.524			0.541				0.564				0.581				0.581
V/C LESS ATSAC/ATCS ADJUSTMENT:				**0.424**			**0.441**				**0.464**				**0.481**				**0.481**
LEVEL OF SERVICE (LOS):				**A**			**A**				**A**				**A**				**A**

REMARKS: Alt. Route 3: Using only Sheldon Pit

Version: 1i Beta; 8/4/2011

PROJECT IMPACT

Change in *v/c* due to project:	0.017	Δ*v/c* after mitigation:	0.017
Significant impacted?	NO	Fully mitigated?	N/A

Level of Service Workheet
(Circular 212 Method)

I/S #:	North-South Street:	Glenoaks Boulevard	Year of Count:	2015	Ambient Growth: (%):	1.5	Conducted by:	City Traffic Counters	Date:	5/8/2015
CMA14	East-West Street:	Sheldon Street	Projection Year:	2018	Peak Hour:	PM	Reviewed by:		Project:	Pacoima Reservoir Project/1-13-4

No. of Phases				2				2				2				2				2			2
Opposed Ø'ing: N/S-1, E/W-2 or Both-3?				0				0				0				0				0			0
Right Turns: FREE-1, NRTOR-2 or OLA-3?	NB--	0	SB--	0	NB--	0	SB--	0	NB--	0	SB--	0	NB--	0	SB--	0	NB--	0	SB--	0	NB--	0	SB-- 0
	EB--	0	WB--	0	EB--	0	WB--	0	EB--	0	WB--	0	EB--	0	WB--	0	EB--	0	WB--	0	EB--	0	WB-- 0
ATSAC-1 or ATSAC+ATCS-2?				2				2				2				2				2			2
Override Capacity				0				0				0				0				0			0

MOVEMENT		EXISTING CONDITION			EXISTING PLUS PROJECT			FUTURE CONDITION W/O PROJECT				FUTURE CONDITION W/ PROJECT				FUTURE W/ PROJECT W/ MITIGATION			
		Volume	No. of Lanes	Lane Volume	Project Traffic	Total Volume	Lane Volume	Added Volume	Total Volume	No. of Lanes	Lane Volume	Added Volume	Total Volume	No. of Lanes	Lane Volume	Added Volume	Total Volume	No. of Lanes	Lane Volume
NORTHBOUND	Left	185	1	**185**	0	185	**185**	0	193	1	**193**	0	193	1	**193**	0	193	1	**193**
	Left-Through		0							0				0				0	
	Through	822	2	411	0	822	411	23	883	2	442	0	883	2	442	0	883	2	442
	Through-Right		0							0				0				0	
	Right	63	1	36	0	63	36	0	66	1	38	0	66	1	38	0	66	1	38
	Left-Through-Right		0							0				0				0	
	Left-Right		0							0				0				0	
SOUTHBOUND	Left	107	1	107	0	107	107	34	146	1	146	0	146	1	146	0	146	1	146
	Left-Through		0							0				0				0	
	Through	697	1	**436**	0	697	**436**	17	746	1	**465**	0	746	1	**465**	0	746	1	**465**
	Through-Right		1							1				1				1	
	Right	175	0	175	0	175	175	0	183	0	183	0	183	0	183	0	183	0	183
	Left-Through-Right		0							0				0				0	
	Left-Right		0							0				0				0	
EASTBOUND	Left	279	1	**279**	0	279	**279**	0	292	1	**292**	0	292	1	**292**	0	292	1	**292**
	Left-Through		0							0				0				0	
	Through	408	1	280	50	458	305	0	427	1	293	50	477	1	318	0	477	1	318
	Through-Right		1							1				1				1	
	Right	151	0	151	0	151	151	0	158	0	158	0	158	0	158	0	158	0	158
	Left-Through-Right		0							0				0				0	
	Left-Right		0							0				0				0	
WESTBOUND	Left	54	1	54	0	54	54	0	56	1	56	0	56	1	56	0	56	1	56
	Left-Through		0							0				0				0	
	Through	208	1	**139**	50	258	**164**	0	218	1	**162**	50	268	1	**187**	0	268	1	**187**
	Through-Right		1							1				1				1	
	Right	69	0	69	0	69	69	34	106	0	106	0	106	0	106	0	106	0	106
	Left-Through-Right		0							0				0				0	
	Left-Right		0							0				0				0	
CRITICAL VOLUMES		*North-South:*		621	*North-South:*		621	*North-South:*			658	*North-South:*			658	*North-South:*			658
		East-West:		418	*East-West:*		443	*East-West:*			454	*East-West:*			479	*East-West:*			479
		SUM:		1039	*SUM:*		1064	*SUM:*			1112	*SUM:*			1137	*SUM:*			1137
VOLUME/CAPACITY *(V/C)* RATIO:				0.693			0.709				0.741				0.758				0.758
V/C LESS ATSAC/ATCS ADJUSTMENT:				**0.593**			**0.609**				**0.641**				**0.658**				**0.658**
LEVEL OF SERVICE (LOS):				**A**			**B**				**B**				**B**				**B**

REMARKS: Alt. Route 3: Using only Sheldon Pit

Version: 1i Beta; 8/4/2011

PROJECT IMPACT

Change in *v/c* due to project:	0.017	Δ*v/c* after mitigation:	0.017
Significant impacted?	NO	Fully mitigated?	N/A

Level of Service Workheet
(Circular 212 Method)

I/S #:	North-South Street:	Laurel Canyon Boulevard	Year of Count:	2015	Ambient Growth: (%):	1.5	Conducted by:	City Traffic Counters	Date:	4/28/2015
CMA15	East-West Street:	Paxton Street	Projection Year:	2018	Peak Hour:	AM	Reviewed by:		Project:	Pacoima Reservoir Project/1-13-4

No. of Phases				3				3				3				3				3		
Opposed Ø'ing: N/S-1, E/W-2 or Both-3?				0				0				0				0				0		
Right Turns: FREE-1, NRTOR-2 or OLA-3?	NB--	0	SB--	0	NB--	0	SB--	0	NB--	0	SB--	0	NB--	0	SB--	0	NB--	0	SB--	0		
	EB--	0	WB--	0	EB--	0	WB--	0	EB--	0	WB--	0	EB--	0	WB--	0	EB--	0	WB--	0		
ATSAC-1 or ATSAC+ATCS-2?				2				2				2				2				2		
Override Capacity				0				0				0				0				0		

	MOVEMENT	EXISTING CONDITION			EXISTING PLUS PROJECT			FUTURE CONDITION W/O PROJECT				FUTURE CONDITION W/ PROJECT				FUTURE W/ PROJECT W/ MITIGATION			
		Volume	No. of Lanes	Lane Volume	Project Traffic	Total Volume	Lane Volume	Added Volume	Total Volume	No. of Lanes	Lane Volume	Added Volume	Total Volume	No. of Lanes	Lane Volume	Added Volume	Total Volume	No. of Lanes	Lane Volume
NORTHBOUND	Left	63	1	**63**	0	63	**63**	6	72	1	**72**	0	72	1	**72**	0	72	1	**72**
	Left-Through		0							0				0				0	
	Through	949	1	542	0	949	542	14	1006	1	573	0	1006	1	573	0	1006	1	573
	Through-Right		1							1				1				1	
	Right	134	0	134	0	134	134	0	140	0	140	0	140	0	140	0	140	0	140
	Left-Through-Right		0							0				0				0	
	Left-Right		0							0				0				0	
SOUTHBOUND	Left	145	1	145	0	145	145	0	152	1	152	0	152	1	152	0	152	1	152
	Left-Through		0							0				0				0	
	Through	1292	1	**789**	0	1292	**789**	21	1372	1	**835**	0	1372	1	**835**	0	1372	1	**835**
	Through-Right		1							1				1				1	
	Right	285	0	285	0	285	285	0	298	0	298	0	298	0	298	0	298	0	298
	Left-Through-Right		0							0				0				0	
	Left-Right		0							0				0				0	
EASTBOUND	Left	79	1	79	0	79	79	0	83	1	83	0	83	1	83	0	83	1	83
	Left-Through		0							0				0				0	
	Through	588	1	**317**	20	608	**327**	1	616	1	**336**	20	636	1	**346**	0	636	1	**346**
	Through-Right		1							1				1				1	
	Right	45	0	45	0	45	45	8	55	0	55	0	55	0	55	0	55	0	55
	Left-Through-Right		0							0				0				0	
	Left-Right		0							0				0				0	
WESTBOUND	Left	97	1	**97**	0	97	**97**	0	101	1	**101**	0	101	1	**101**	0	101	1	**101**
	Left-Through		0							0				0				0	
	Through	410	1	308	20	430	318	1	430	1	323	20	450	1	333	0	450	1	333
	Through-Right		1							1				1				1	
	Right	206	0	206	0	206	206	0	215	0	215	0	215	0	215	0	215	0	215
	Left-Through-Right		0							0				0				0	
	Left-Right		0							0				0				0	
CRITICAL VOLUMES			*North-South:*	852		*North-South:*	852		*North-South:*	907			*North-South:*	907			*North-South:*	907	
			East-West:	414		*East-West:*	424		*East-West:*	437			*East-West:*	447			*East-West:*	447	
			SUM:	1266		*SUM:*	1276		*SUM:*	1344			*SUM:*	1354			*SUM:*	1354	
VOLUME/CAPACITY *(V/C)* RATIO:				0.888			0.895			0.943				0.950				0.950	
V/C LESS ATSAC/ATCS ADJUSTMENT:				**0.788**			**0.795**			**0.843**				**0.850**				**0.850**	
LEVEL OF SERVICE (LOS):				**C**			**C**			**D**				**D**				**D**	

REMARKS: Alt. Route 3: Using only Sheldon Pit

Version: 1i Beta; 8/4/2011

PROJECT IMPACT

Change in *v/c* due to project:	0.007	Δ*v/c* after mitigation:	0.007
Significant impacted?	NO	Fully mitigated?	N/A

Level of Service Workheet
(Circular 212 Method)

I/S #:	North-South Street:	Laurel Canyon Boulevard	Year of Count:	2015	Ambient Growth: (%):	1.5	Conducted by:	City Traffic Counters	Date:	4/28/2015
CMA15	East-West Street:	Paxton Street	Projection Year:	2018	Peak Hour:	Mid-Day	Reviewed by:		Project:	Pacoima Reservoir Project/1-13-4

No. of Phases				3				3				3				3				3		
Opposed Ø'ing: N/S-1, E/W-2 or Both-3?				0				0				0				0				0		
Right Turns: FREE-1, NRTOR-2 or OLA-3?	NB--	0	SB--	0	NB--	0	SB--	0	NB--	0	SB--	0	NB--	0	SB--	0	NB--	0	SB--	0		
	EB--	0	WB--	0	EB--	0	WB--	0	EB--	0	WB--	0	EB--	0	WB--	0	EB--	0	WB--	0		
ATSAC-1 or ATSAC+ATCS-2?				2				2				2				2				2		
Override Capacity				0				0				0				0				0		

	MOVEMENT	EXISTING CONDITION			EXISTING PLUS PROJECT			FUTURE CONDITION W/O PROJECT				FUTURE CONDITION W/ PROJECT				FUTURE W/ PROJECT W/ MITIGATION			
		Volume	No. of Lanes	Lane Volume	Project Traffic	Total Volume	Lane Volume	Added Volume	Total Volume	No. of Lanes	Lane Volume	Added Volume	Total Volume	No. of Lanes	Lane Volume	Added Volume	Total Volume	No. of Lanes	Lane Volume
NORTHBOUND	Left	83	1	83	0	83	83	1	88	1	88	0	88	1	88	0	88	1	88
	Left-Through		0							0				0				0	
	Through	548	1	**331**	0	548	**331**	1	574	1	**346**	0	574	1	**346**	0	574	1	**346**
	Through-Right		1							1				1				1	
	Right	113	0	113	0	113	113	0	118	0	118	0	118	0	118	0	118	0	118
	Left-Through-Right		0							0				0				0	
	Left-Right		0							0				0				0	
SOUTHBOUND	Left	155	1	**155**	0	155	**155**	0	162	1	**162**	0	162	1	**162**	0	162	1	**162**
	Left-Through		0							0				0				0	
	Through	510	1	292	0	510	292	1	534	1	305	0	534	1	305	0	534	1	305
	Through-Right		1							1				1				1	
	Right	73	0	73	0	73	73	0	76	0	76	0	76	0	76	0	76	0	76
	Left-Through-Right		0							0				0				0	
	Left-Right		0							0				0				0	
EASTBOUND	Left	114	1	**114**	0	114	**114**	0	119	1	**119**	0	119	1	**119**	0	119	1	**119**
	Left-Through		0							0				0				0	
	Through	307	1	170	20	327	180	1	322	1	179	20	342	1	189	0	342	1	189
	Through-Right		1							1				1				1	
	Right	33	0	33	0	33	33	1	36	0	36	0	36	0	36	0	36	0	36
	Left-Through-Right		0							0				0				0	
	Left-Right		0							0				0				0	
WESTBOUND	Left	78	1	78	0	78	78	0	82	1	82	0	82	1	82	0	82	1	82
	Left-Through		0							0				0				0	
	Through	240	1	**178**	20	260	**188**	1	252	1	**187**	20	272	1	**197**	0	272	1	**197**
	Through-Right		1							1				1				1	
	Right	116	0	116	0	116	116	0	121	0	121	0	121	0	121	0	121	0	121
	Left-Through-Right		0							0				0				0	
	Left-Right		0							0				0				0	
CRITICAL VOLUMES			*North-South:*	486		*North-South:*	486		*North-South:*	508			*North-South:*	508			*North-South:*	508	
			East-West:	292		*East-West:*	302		*East-West:*	306			*East-West:*	316			*East-West:*	316	
			SUM:	778		*SUM:*	788		*SUM:*	814			*SUM:*	824			*SUM:*	824	
VOLUME/CAPACITY *(V/C)* RATIO:				0.546			0.553				0.571				0.578				0.578
V/C LESS ATSAC/ATCS ADJUSTMENT:				**0.446**			**0.453**				**0.471**				**0.478**				**0.478**
LEVEL OF SERVICE (LOS):				**A**			**A**				**A**				**A**				**A**

REMARKS: Alt. Route 3: Using only Sheldon Pit

Version: 1i Beta; 8/4/2011

PROJECT IMPACT

Change in *v/c* due to project:	0.007	Δ*v/c* after mitigation:	0.007
Significant impacted?	NO	Fully mitigated?	N/A

Level of Service Workheet
(Circular 212 Method)

I/S #:	North-South Street:	Laurel Canyon Boulevard	Year of Count:	2015	Ambient Growth: (%):	1.5	Conducted by:	City Traffic Counters	Date:	4/28/2015
CMA15	East-West Street:	Paxton Street	Projection Year:	2018	Peak Hour:	PM	Reviewed by:		Project:	Pacoima Reservoir Project/1-13-4

No. of Phases				3				3				3				3				3			3
Opposed Ø'ing: N/S-1, E/W-2 or Both-3?				0				0				0				0				0			0
Right Turns: FREE-1, NRTOR-2 or OLA-3?	NB--	0	SB--	0	NB--	0	SB--	0	NB--	0	SB--	0	NB--	0	SB--	0	NB--	0	SB--	0	NB--	0	SB--	0
	EB--	0	WB--	0	EB--	0	WB--	0	EB--	0	WB--	0	EB--	0	WB--	0	EB--	0	WB--	0	EB--	0	WB--	0
ATSAC-1 or ATSAC+ATCS-2?				2				2				2				2				2			2
Override Capacity				0				0				0				0				0			0

	MOVEMENT	EXISTING CONDITION			EXISTING PLUS PROJECT			FUTURE CONDITION W/O PROJECT				FUTURE CONDITION W/ PROJECT				FUTURE W/ PROJECT W/ MITIGATION			
		Volume	No. of Lanes	Lane Volume	Project Traffic	Total Volume	Lane Volume	Added Volume	Total Volume	No. of Lanes	Lane Volume	Added Volume	Total Volume	No. of Lanes	Lane Volume	Added Volume	Total Volume	No. of Lanes	Lane Volume
NORTHBOUND	Left	160	1	160	0	160	160	5	172	1	172	0	172	1	172	0	172	1	172
	Left-Through		0							0				0				0	
	Through	1224	1	**693**	0	1224	**693**	11	1291	1	**730**	0	1291	1	**730**	0	1291	1	**730**
	Through-Right		1							1				1				1	
	Right	162	0	162	0	162	162	0	169	0	169	0	169	0	169	0	169	0	169
	Left-Through-Right		0							0				0				0	
	Left-Right		0							0				0				0	
SOUTHBOUND	Left	193	1	**193**	0	193	**193**	0	202	1	**202**	0	202	1	**202**	0	202	1	**202**
	Left-Through		0							0				0				0	
	Through	1050	1	643	0	1050	643	8	1106	1	677	0	1106	1	677	0	1106	1	677
	Through-Right		1							1				1				1	
	Right	236	0	236	0	236	236	0	247	0	247	0	247	0	247	0	247	0	247
	Left-Through-Right		0							0				0				0	
	Left-Right		0							0				0				0	
EASTBOUND	Left	89	1	89	0	89	89	0	93	1	93	0	93	1	93	0	93	1	93
	Left-Through		0							0				0				0	
	Through	682	1	**399**	20	702	**409**	1	714	1	**420**	20	734	1	**430**	0	734	1	**430**
	Through-Right		1							1				1				1	
	Right	116	0	116	0	116	116	4	125	0	125	0	125	0	125	0	125	0	125
	Left-Through-Right		0							0				0				0	
	Left-Right		0							0				0				0	
WESTBOUND	Left	101	1	**101**	0	101	**101**	0	106	1	**106**	0	106	1	**106**	0	106	1	**106**
	Left-Through		0							0				0				0	
	Through	550	1	327	20	570	337	1	576	1	342	20	596	1	352	0	596	1	352
	Through-Right		1							1				1				1	
	Right	103	0	103	0	103	103	0	108	0	108	0	108	0	108	0	108	0	108
	Left-Through-Right		0							0				0				0	
	Left-Right		0							0				0				0	
CRITICAL VOLUMES		North-South:		886	North-South:		886	North-South:			932	North-South:			932	North-South:			932
		East-West:		500	East-West:		510	East-West:			526	East-West:			536	East-West:			536
		SUM:		1386	SUM:		1396	SUM:			1458	SUM:			1468	SUM:			1468
VOLUME/CAPACITY (V/C) RATIO:				0.973			0.980				1.023				1.030				1.030
V/C LESS ATSAC/ATCS ADJUSTMENT:				0.873			0.880				0.923				0.930				0.930
LEVEL OF SERVICE (LOS):				D			D				E				E				E

REMARKS: Alt. Route 3: Using only Sheldon Pit

Version: 1i Beta; 8/4/2011

PROJECT IMPACT

Change in *v/c* due to project:	0.007	Δ*v/c* after mitigation:	0.007
Significant impacted?	NO	Fully mitigated?	N/A

Level of Service Workheet
(Circular 212 Method)

I/S #:	North-South Street:	Haddon Street	Year of Count:	2015	Ambient Growth: (%):	1.5	Conducted by:	City Traffic Counters	Date:	4/28/2015
CMA16	East-West Street:	Paxton Street	Projection Year:	2018	Peak Hour:	AM	Reviewed by:		Project:	Pacoima Reservoir Project/1-13-4

	Existing Condition	Existing Plus Project	Future Condition W/O Project	Future Condition W/ Project	Future W/ Project W/ Mitigation
No. of Phases	0	0	0	0	0
Opposed Ø'ing: N/S-1, E/W-2 or Both-3?	0	0	0	0	0
Right Turns: FREE-1, NRTOR-2 or OLA-3?	NB-- 0 SB-- 0	NB-- 0 SB-- 0	NB-- 0 SB-- 0	NB-- 0 SB-- 0	NB-- 0 SB-- 0
	EB-- 0 WB-- 0	EB-- 0 WB-- 0	EB-- 0 WB-- 0	EB-- 0 WB-- 0	EB-- 0 WB-- 0
ATSAC-1 or ATSAC+ATCS-2?	0	0	0	0	0
Override Capacity	1200	#####	1200	1200	1200

	MOVEMENT	Existing Condition Volume	No. of Lanes	Lane Volume	Existing Plus Project Project Traffic	Total Volume	Lane Volume	Future Condition W/O Project Added Volume	Total Volume	No. of Lanes	Lane Volume	Future Condition W/ Project Added Volume	Total Volume	No. of Lanes	Lane Volume	Future W/ Project W/ Mitigation Added Volume	Total Volume	No. of Lanes	Lane Volume
NORTHBOUND	Left	24	0	24	0	24	24	0	25	0	25	0	25	0	25	0	25	0	25
	Left-Through		0							0				0				0	
	Through	0	0	**108**	0	0	**108**	0	0	0	**113**	0	0	0	**113**	0	0	0	**113**
	Through-Right		0							0				0				0	
	Right	84	0	0	0	84	0	0	88	0	0	0	88	0	0	0	88	0	0
	Left-Through-Right		1							1				1				1	
	Left-Right		0							0				0				0	
SOUTHBOUND	Left	1	0	**1**	0	1	**1**	0	1	0	**1**	0	1	0	**1**	0	1	0	**1**
	Left-Through		0							0				0				0	
	Through	0	0	9	0	0	9	0	0	0	9	0	0	0	9	0	0	0	9
	Through-Right		0							0				0				0	
	Right	8	0	0	0	8	0	0	8	0	0	0	8	0	0	0	8	0	0
	Left-Through-Right		1							1				1				1	
	Left-Right		0							0				0				0	
EASTBOUND	Left	9	1	9	0	9	9	0	9	1	9	0	9	1	9	0	9	1	9
	Left-Through		0							0				0				0	
	Through	807	1	**416**	20	827	**426**	1	845	1	**436**	20	865	1	**446**	0	865	1	**446**
	Through-Right		1							1				1				1	
	Right	25	0	25	0	25	25	0	26	0	26	0	26	0	26	0	26	0	26
	Left-Through-Right		0							0				0				0	
	Left-Right		0							0				0				0	
WESTBOUND	Left	73	1	**73**	0	73	**73**	0	76	1	**76**	0	76	1	**76**	0	76	1	**76**
	Left-Through		0							0				0				0	
	Through	766	1	386	20	786	396	1	802	1	404	20	822	1	414	0	822	1	414
	Through-Right		1							1				1				1	
	Right	5	0	5	0	5	5	0	5	0	5	0	5	0	5	0	5	0	5
	Left-Through-Right		0							0				0				0	
	Left-Right		0							0				0				0	
CRITICAL VOLUMES		North-South:		109	North-South:		109	North-South:			114	North-South:			114	North-South:			114
		East-West:		489	East-West:		499	East-West:			512	East-West:			522	East-West:			522
		SUM:		598	SUM:		608	SUM:			626	SUM:			636	SUM:			636
VOLUME/CAPACITY (V/C) RATIO:				0.498			0.507				0.522				0.530				0.530
V/C LESS ATSAC/ATCS ADJUSTMENT:				0.498			0.507				0.522				0.530				0.530
LEVEL OF SERVICE (LOS):				A			A				A				A				A

REMARKS: Alt. Route 3: Using only Sheldon Pit

Version: 1i Beta; 8/4/2011

PROJECT IMPACT

Change in *v/c* due to project:	0.008	Δ*v/c* after mitigation:	0.008
Significant impacted?	NO	Fully mitigated?	N/A

Level of Service Workheet
(Circular 212 Method)

I/S #:	North-South Street:	Haddon Street	Year of Count:	2015	Ambient Growth: (%):	1.5	Conducted by:	City Traffic Counters	Date:	4/28/2015
CMA16	East-West Street:	Paxton Street	Projection Year:	2018	Peak Hour:	Mid-Day	Reviewed by:		Project:	Pacoima Reservoir Project/1-13-4

No. of Phases				0				0				0				0				0			
Opposed Ø'ing: N/S-1, E/W-2 or Both-3?				0				0				0				0				0			
Right Turns: FREE-1, NRTOR-2 or OLA-3?	NB--	0	SB--	0	NB--	0	SB--	0	NB--	0	SB--	0	NB--	0	SB--	0	NB--	0	SB--	0			
	EB--	0	WB--	0	EB--	0	WB--	0	EB--	0	WB--	0	EB--	0	WB--	0	EB--	0	WB--	0			
ATSAC-1 or ATSAC+ATCS-2?				0				0				0				0				0			
Override Capacity				1200				#####				1200				1200				1200			

	MOVEMENT	EXISTING CONDITION			EXISTING PLUS PROJECT			FUTURE CONDITION W/O PROJECT				FUTURE CONDITION W/ PROJECT				FUTURE W/ PROJECT W/ MITIGATION			
		Volume	No. of Lanes	Lane Volume	Project Traffic	Total Volume	Lane Volume	Added Volume	Total Volume	No. of Lanes	Lane Volume	Added Volume	Total Volume	No. of Lanes	Lane Volume	Added Volume	Total Volume	No. of Lanes	Lane Volume
NORTHBOUND	Left	8	0	8	0	8	8	0	8	0	8	0	8	0	8	0	8	0	8
	Left-Through		0							0				0				0	
	Through	3	0	**39**	0	3	**39**	0	3	0	**40**	0	3	0	**40**	0	3	0	**40**
	Through-Right		0							0				0				0	
	Right	28	0	0	0	28	0	0	29	0	0	0	29	0	0	0	29	0	0
	Left-Through-Right		1							1				1				1	
	Left-Right		0							0				0				0	
SOUTHBOUND	Left	2	0	**2**	0	2	**2**	0	2	0	**2**	0	2	0	**2**	0	2	0	**2**
	Left-Through		0							0				0				0	
	Through	0	0	9	0	0	9	0	0	0	9	0	0	0	9	0	0	0	9
	Through-Right		0							0				0				0	
	Right	7	0	0	0	7	0	0	7	0	0	0	7	0	0	0	7	0	0
	Left-Through-Right		1							1				1				1	
	Left-Right		0							0				0				0	
EASTBOUND	Left	6	1	6	0	6	6	0	6	1	6	0	6	1	6	0	6	1	6
	Left-Through		0							0				0				0	
	Through	483	1	**250**	20	503	**260**	1	506	1	**262**	20	526	1	**272**	0	526	1	**272**
	Through-Right		1							1				1				1	
	Right	17	0	17	0	17	17	0	18	0	18	0	18	0	18	0	18	0	18
	Left-Through-Right		0							0				0				0	
	Left-Right		0							0				0				0	
WESTBOUND	Left	49	1	**49**	0	49	**49**	0	51	1	**51**	0	51	1	**51**	0	51	1	**51**
	Left-Through		0							0				0				0	
	Through	526	1	264	20	546	274	1	551	1	277	20	571	1	287	0	571	1	287
	Through-Right		1							1				1				1	
	Right	2	0	2	0	2	2	0	2	0	2	0	2	0	2	0	2	0	2
	Left-Through-Right		0							0				0				0	
	Left-Right		0							0				0				0	
CRITICAL VOLUMES		North-South:		41	North-South:		41	North-South:			42	North-South:			42	North-South:			42
		East-West:		299	East-West:		309	East-West:			313	East-West:			323	East-West:			323
		SUM:		340	SUM:		350	SUM:			355	SUM:			365	SUM:			365
VOLUME/CAPACITY (V/C) RATIO:				0.283			0.292				0.296				0.304				0.304
V/C LESS ATSAC/ATCS ADJUSTMENT:				0.283			0.292				0.296				0.304				0.304
LEVEL OF SERVICE (LOS):				A			A				A				A				A

REMARKS: Alt. Route 3: Using only Sheldon Pit

Version: 1i Beta; 8/4/2011

PROJECT IMPACT

Change in *v/c* due to project:	0.008	Δ*v/c* after mitigation:	0.008
Significant impacted?	NO	Fully mitigated?	N/A

Level of Service Workheet
(Circular 212 Method)

I/S #:	North-South Street:	Haddon Street	Year of Count:	2015	Ambient Growth: (%):	1.5	Conducted by:	City Traffic Counters	Date:	4/28/2015
CMA16	East-West Street:	Paxton Street	Projection Year:	2018	Peak Hour:	PM	Reviewed by:		Project:	Pacoima Reservoir Project/1-13-4

No. of Phases				0				0				0				0				0			
Opposed Ø'ing: N/S-1, E/W-2 or Both-3?				0				0				0				0				0			
Right Turns: FREE-1, NRTOR-2 or OLA-3?	NB--	0	SB--	0	NB--	0	SB--	0	NB--	0	SB--	0	NB--	0	SB--	0	NB--	0	SB--	0			
	EB--	0	WB--	0	EB--	0	WB--	0	EB--	0	WB--	0	EB--	0	WB--	0	EB--	0	WB--	0			
ATSAC-1 or ATSAC+ATCS-2?				0				0				0				0				0			
Override Capacity				1200				#####				1200				1200				1200			

	MOVEMENT	EXISTING CONDITION			EXISTING PLUS PROJECT			FUTURE CONDITION W/O PROJECT				FUTURE CONDITION W/ PROJECT				FUTURE W/ PROJECT W/ MITIGATION			
		Volume	No. of Lanes	Lane Volume	Project Traffic	Total Volume	Lane Volume	Added Volume	Total Volume	No. of Lanes	Lane Volume	Added Volume	Total Volume	No. of Lanes	Lane Volume	Added Volume	Total Volume	No. of Lanes	Lane Volume
NORTHBOUND	Left	10	0	10	0	10	10	0	10	0	10	0	10	0	10	0	10	0	10
	Left-Through		0							0				0				0	
	Through	1	0	**82**	0	1	**82**	0	1	0	**85**	0	1	0	**85**	0	1	0	**85**
	Through-Right		0							0				0				0	
	Right	71	0	0	0	71	0	0	74	0	0	0	74	0	0	0	74	0	0
	Left-Through-Right		1							1				1				1	
	Left-Right		0							0				0				0	
SOUTHBOUND	Left	5	0	**5**	0	5	**5**	0	5	0	**5**	0	5	0	**5**	0	5	0	**5**
	Left-Through		0							0				0				0	
	Through	0	0	10	0	0	10	0	0	0	10	0	0	0	10	0	0	0	10
	Through-Right		0							0				0				0	
	Right	5	0	0	0	5	0	0	5	0	0	0	5	0	0	0	5	0	0
	Left-Through-Right		1							1				1				1	
	Left-Right		0							0				0				0	
EASTBOUND	Left	18	1	18	0	18	18	0	19	1	19	0	19	1	19	0	19	1	19
	Left-Through		0							0				0				0	
	Through	1002	1	**518**	20	1022	**528**	1	1049	1	**543**	20	1069	1	**553**	0	1069	1	**553**
	Through-Right		1							1				1				1	
	Right	34	0	34	0	34	34	0	36	0	36	0	36	0	36	0	36	0	36
	Left-Through-Right		0							0				0				0	
	Left-Right		0							0				0				0	
WESTBOUND	Left	70	1	**70**	0	70	**70**	0	73	1	**73**	0	73	1	**73**	0	73	1	**73**
	Left-Through		0							0				0				0	
	Through	681	1	344	20	701	354	1	713	1	360	20	733	1	370	0	733	1	370
	Through-Right		1							1				1				1	
	Right	7	0	7	0	7	7	0	7	0	7	0	7	0	7	0	7	0	7
	Left-Through-Right		0							0				0				0	
	Left-Right		0							0				0				0	
CRITICAL VOLUMES		*North-South:*		87	*North-South:*		87	*North-South:*			90	*North-South:*			90	*North-South:*			90
		East-West:		588	*East-West:*		598	*East-West:*			616	*East-West:*			626	*East-West:*			626
		SUM:		675	*SUM:*		685	*SUM:*			706	*SUM:*			716	*SUM:*			716
VOLUME/CAPACITY *(V/C)* RATIO:				0.563			0.571				0.588				0.597				0.597
V/C LESS ATSAC/ATCS ADJUSTMENT:				0.563			0.571				0.588				0.597				0.597
LEVEL OF SERVICE (LOS):				A			A				A				A				A

REMARKS: Alt. Route 3: Using only Sheldon Pit

Version: 1i Beta; 8/4/2011

PROJECT IMPACT

Change in *v/c* due to project:	0.009	Δ*v/c* after mitigation:	0.009
Significant impacted?	NO	Fully mitigated?	N/A

Level of Service Workheet
(Circular 212 Method)

I/S #:	North-South Street:	Kewen Avenue	Year of Count:	2015	Ambient Growth: (%):	1.5	Conducted by:	City Traffic Counters	Date:	4/28/2015
CMA17	East-West Street:	Paxton Street	Projection Year:	2018	Peak Hour:	AM	Reviewed by:		Project:	Pacoima Reservoir Project/1-13-4

	Existing Condition	Existing Plus Project	Future Condition W/O Project	Future Condition W/ Project	Future W/ Project W/ Mitigation
No. of Phases	0	0	0	0	0
Opposed Ø'ing: N/S-1, E/W-2 or Both-3?	0	0	0	0	0
Right Turns: FREE-1, NRTOR-2 or OLA-3?	NB-- 0 SB-- 0	NB-- 0 SB-- 0	NB-- 0 SB-- 0	NB-- 0 SB-- 0	NB-- 0 SB-- 0
	EB-- 0 WB-- 0	EB-- 0 WB-- 0	EB-- 0 WB-- 0	EB-- 0 WB-- 0	EB-- 0 WB-- 0
ATSAC-1 or ATSAC+ATCS-2?	0	0	0	0	0
Override Capacity	1200	#####	1200	1200	1200

	MOVEMENT	Existing Condition Volume	No. of Lanes	Lane Volume	Existing Plus Project Project Traffic	Total Volume	Lane Volume	Future Condition W/O Project Added Volume	Total Volume	No. of Lanes	Lane Volume	Future Condition W/ Project Added Volume	Total Volume	No. of Lanes	Lane Volume	Future W/ Project W/ Mitigation Added Volume	Total Volume	No. of Lanes	Lane Volume
NORTHBOUND	Left	36	0	36	0	36	36	0	38	0	38	0	38	0	38	0	38	0	38
	Left-Through		0							0				0				0	
	Through	0	0	0	0	0	0	0	0	0	0	0	0	0	0	0	0	0	0
	Through-Right		0							0				0				0	
	Right	86	0	**122**	0	86	**122**	0	90	0	**128**	0	90	0	**128**	0	90	0	**128**
	Left-Through-Right		0							0				0				0	
	Left-Right		1							1				1				1	
SOUTHBOUND	Left	0	0	**0**	0	0	**0**	0	0	0	**0**	0	0	0	**0**	0	0	0	**0**
	Left-Through		0							0				0				0	
	Through	0	0	0	0	0	0	0	0	0	0	0	0	0	0	0	0	0	0
	Through-Right		0							0				0				0	
	Right	0	0	0	0	0	0	0	0	0	0	0	0	0	0	0	0	0	0
	Left-Through-Right		0							0				0				0	
	Left-Right		0							0				0				0	
EASTBOUND	Left	0	0	0	0	0	0	0	0	0	0	0	0	0	0	0	0	0	0
	Left-Through		0							0				0				0	
	Through	833	1	**444**	20	853	**454**	1	872	1	**464**	20	892	1	**474**	0	892	1	**474**
	Through-Right		1							1				1				1	
	Right	54	0	54	0	54	54	0	56	0	56	0	56	0	56	0	56	0	56
	Left-Through-Right		0							0				0				0	
	Left-Right		0							0				0				0	
WESTBOUND	Left	52	1	**52**	0	52	**52**	0	54	1	**54**	0	54	1	**54**	0	54	1	**54**
	Left-Through		0							0				0				0	
	Through	785	2	393	20	805	403	1	822	2	411	20	842	2	421	0	842	2	421
	Through-Right		0							0				0				0	
	Right	0	0	0	0	0	0	0	0	0	0	0	0	0	0	0	0	0	0
	Left-Through-Right		0							0				0				0	
	Left-Right		0							0				0				0	
CRITICAL VOLUMES		North-South:		122	North-South:		122	North-South:			128	North-South:			128	North-South:			128
		East-West:		496	East-West:		506	East-West:			518	East-West:			528	East-West:			528
		SUM:		618	SUM:		628	SUM:			646	SUM:			656	SUM:			656
VOLUME/CAPACITY (V/C) RATIO:				0.515			0.523				0.538				0.547				0.547
V/C LESS ATSAC/ATCS ADJUSTMENT:				0.515			0.523				0.538				0.547				0.547
LEVEL OF SERVICE (LOS):				A			A				A				A				A

REMARKS: Alt. Route 3: Using only Sheldon Pit

Version: 1i Beta; 8/4/2011

PROJECT IMPACT

Change in *v/c* due to project:	0.009	Δ*v/c* after mitigation:	0.009
Significant impacted?	NO	Fully mitigated?	N/A

Level of Service Workheet
(Circular 212 Method)

I/S #:	North-South Street:	Kewen Avenue	Year of Count:	2015	Ambient Growth: (%):	1.5	Conducted by:	City Traffic Counters	Date:	4/28/2015
CMA17	East-West Street:	Paxton Street	Projection Year:	2018	Peak Hour:	Mid-Day	Reviewed by:		Project:	Pacoima Reservoir Project/1-13-4

No. of Phases				0				0				0				0				0	
Opposed Ø'ing: N/S-1, E/W-2 or Both-3?				0				0				0				0				0	
Right Turns: FREE-1, NRTOR-2 or OLA-3?	NB--	0	SB--	0	NB--	0	SB--	0	NB--	0	SB--	0	NB--	0	SB--	0	NB--	0	SB--	0	
	EB--	0	WB--	0	EB--	0	WB--	0	EB--	0	WB--	0	EB--	0	WB--	0	EB--	0	WB--	0	
ATSAC-1 or ATSAC+ATCS-2?				0				0				0				0				0	
Override Capacity				1200				#####				1200				1200				1200	

	MOVEMENT	EXISTING CONDITION			EXISTING PLUS PROJECT			FUTURE CONDITION W/O PROJECT				FUTURE CONDITION W/ PROJECT				FUTURE W/ PROJECT W/ MITIGATION			
		Volume	No. of Lanes	Lane Volume	Project Traffic	Total Volume	Lane Volume	Added Volume	Total Volume	No. of Lanes	Lane Volume	Added Volume	Total Volume	No. of Lanes	Lane Volume	Added Volume	Total Volume	No. of Lanes	Lane Volume
NORTHBOUND	Left	8	0	8	0	8	8	0	8	0	8	0	8	0	8	0	8	0	8
	Left-Through		0							0				0				0	
	Through	0	0	0	0	0	0	0	0	0	0	0	0	0	0	0	0	0	0
	Through-Right		0							0				0				0	
	Right	26	0	**34**	0	26	**34**	0	27	0	**35**	0	27	0	**35**	0	27	0	**35**
	Left-Through-Right		0							0				0				0	
	Left-Right		1							1				1				1	
SOUTHBOUND	Left	0	0	**0**	0	0	**0**	0	0	0	**0**	0	0	0	**0**	0	0	0	**0**
	Left-Through		0							0				0				0	
	Through	0	0	0	0	0	0	0	0	0	0	0	0	0	0	0	0	0	0
	Through-Right		0							0				0				0	
	Right	0	0	0	0	0	0	0	0	0	0	0	0	0	0	0	0	0	0
	Left-Through-Right		0							0				0				0	
	Left-Right		0							0				0				0	
EASTBOUND	Left	0	0	0	0	0	0	0	0	0	0	0	0	0	0	0	0	0	0
	Left-Through		0							0				0				0	
	Through	523	1	**272**	20	543	**282**	1	548	1	**285**	20	568	1	**295**	0	568	1	**295**
	Through-Right		1							1				1				1	
	Right	20	0	20	0	20	20	0	21	0	21	0	21	0	21	0	21	0	21
	Left-Through-Right		0							0				0				0	
	Left-Right		0							0				0				0	
WESTBOUND	Left	25	1	**25**	0	25	**25**	0	26	1	**26**	0	26	1	**26**	0	26	1	**26**
	Left-Through		0							0				0				0	
	Through	522	2	261	20	542	271	1	547	2	274	20	567	2	284	0	567	2	284
	Through-Right		0							0				0				0	
	Right	0	0	0	0	0	0	0	0	0	0	0	0	0	0	0	0	0	0
	Left-Through-Right		0							0				0				0	
	Left-Right		0							0				0				0	
CRITICAL VOLUMES		*North-South:*		34	*North-South:*		34	*North-South:*			35	*North-South:*			35	*North-South:*			35
		East-West:		297	*East-West:*		307	*East-West:*			311	*East-West:*			321	*East-West:*			321
		SUM:		331	*SUM:*		341	*SUM:*			346	*SUM:*			356	*SUM:*			356
VOLUME/CAPACITY *(V/C)* RATIO:				0.276			0.284				0.288				0.297				0.297
V/C LESS ATSAC/ATCS ADJUSTMENT:				0.276			0.284				0.288				0.297				0.297
LEVEL OF SERVICE (LOS):				A			A				A				A				A

REMARKS: Alt. Route 3: Using only Sheldon Pit

Version: 1i Beta; 8/4/2011

PROJECT IMPACT

Change in *v/c* due to project:	0.009	Δ*v/c* after mitigation:	0.009
Significant impacted?	NO	Fully mitigated?	N/A

Level of Service Workheet
(Circular 212 Method)

I/S #:	North-South Street:	Kewen Avenue	Year of Count:	2015	Ambient Growth: (%):	1.5	Conducted by:	City Traffic Counters	Date:	4/28/2015
CMA17	East-West Street:	Paxton Street	Projection Year:	2018	Peak Hour:	PM	Reviewed by:		Project:	Pacoima Reservoir Project/1-13-4

No. of Phases				0				0				0				0				0			
Opposed Ø'ing: N/S-1, E/W-2 or Both-3?				0				0				0				0				0			
Right Turns: FREE-1, NRTOR-2 or OLA-3?	NB--	0	SB--	0	NB--	0	SB--	0	NB--	0	SB--	0	NB--	0	SB--	0	NB--	0	SB--	0
	EB--	0	WB--	0	EB--	0	WB--	0	EB--	0	WB--	0	EB--	0	WB--	0	EB--	0	WB--	0
ATSAC-1 or ATSAC+ATCS-2?				0				0				0				0				0
Override Capacity				1200				#####				1200				1200				1200

	MOVEMENT	EXISTING CONDITION			EXISTING PLUS PROJECT			FUTURE CONDITION W/O PROJECT				FUTURE CONDITION W/ PROJECT				FUTURE W/ PROJECT W/ MITIGATION			
		Volume	No. of Lanes	Lane Volume	Project Traffic	Total Volume	Lane Volume	Added Volume	Total Volume	No. of Lanes	Lane Volume	Added Volume	Total Volume	No. of Lanes	Lane Volume	Added Volume	Total Volume	No. of Lanes	Lane Volume
NORTHBOUND	Left	18	0	18	0	18	18	0	19	0	19	0	19	0	19	0	19	0	19
	Left-Through		0							0				0				0	
	Through	0	0	0	0	0	0	0	0	0	0	0	0	0	0	0	0	0	0
	Through-Right		0							0				0				0	
	Right	56	0	**74**	0	56	**74**	0	59	0	**78**	0	59	0	**78**	0	59	0	**78**
	Left-Through-Right		0							0				0				0	
	Left-Right		1							1				1				1	
SOUTHBOUND	Left	0	0	**0**	0	0	**0**	0	0	0	**0**	0	0	0	**0**	0	0	0	**0**
	Left-Through		0							0				0				0	
	Through	0	0	0	0	0	0	0	0	0	0	0	0	0	0	0	0	0	0
	Through-Right		0							0				0				0	
	Right	0	0	0	0	0	0	0	0	0	0	0	0	0	0	0	0	0	0
	Left-Through-Right		0							0				0				0	
	Left-Right		0							0				0				0	
EASTBOUND	Left	0	0	0	0	0	0	0	0	0	0	0	0	0	0	0	0	0	0
	Left-Through		0							0				0				0	
	Through	1027	1	**531**	20	1047	**541**	1	1075	1	**556**	20	1095	1	**566**	0	1095	1	**566**
	Through-Right		1							1				1				1	
	Right	35	0	35	0	35	35	0	37	0	37	0	37	0	37	0	37	0	37
	Left-Through-Right		0							0				0				0	
	Left-Right		0							0				0				0	
WESTBOUND	Left	26	1	**26**	0	26	**26**	0	27	1	**27**	0	27	1	**27**	0	27	1	**27**
	Left-Through		0							0				0				0	
	Through	748	2	374	20	768	384	1	783	2	392	20	803	2	402	0	803	2	402
	Through-Right		0							0				0				0	
	Right	0	0	0	0	0	0	0	0	0	0	0	0	0	0	0	0	0	0
	Left-Through-Right		0							0				0				0	
	Left-Right		0							0				0				0	
CRITICAL VOLUMES		*North-South:*		74	*North-South:*		74	*North-South:*			78	*North-South:*			78	*North-South:*			78
		East-West:		557	*East-West:*		567	*East-West:*			583	*East-West:*			593	*East-West:*			593
		SUM:		631	*SUM:*		641	*SUM:*			661	*SUM:*			671	*SUM:*			671
VOLUME/CAPACITY *(V/C)* RATIO:				0.526			0.534				0.551				0.559				0.559
V/C LESS ATSAC/ATCS ADJUSTMENT:				0.526			0.534				0.551				0.559				0.559
LEVEL OF SERVICE (LOS):				A			A				A				A				A

REMARKS: Alt. Route 3: Using only Sheldon Pit

Version: 1i Beta; 8/4/2011

PROJECT IMPACT

Change in *v/c* due to project:	0.008	Δ*v/c* after mitigation:	0.008
Significant impacted?	NO	Fully mitigated?	N/A

Level of Service Workheet
(Circular 212 Method)

I/S #:	North-South Street:	Telfair Avenue	Year of Count:	2015	Ambient Growth: (%):	1.5	Conducted by:	City Traffic Counters	Date:	4/28/2015
CMA18	East-West Street:	Paxton Street	Projection Year:	2018	Peak Hour:	AM	Reviewed by:		Project:	Pacoima Reservoir Project/1-13-4

	Existing Condition	Existing Plus Project	Future Condition W/O Project	Future Condition W/ Project	Future W/ Project W/ Mitigation
No. of Phases	2	2	2	2	2
Opposed Ø'ing: N/S-1, E/W-2 or Both-3?	0	0	0	0	0
Right Turns: FREE-1, NRTOR-2 or OLA-3?	NB-- 0 SB-- 0 EB-- 0 WB-- 0	NB-- 0 SB-- 0 EB-- 0 WB-- 0	NB-- 0 SB-- 0 EB-- 0 WB-- 0	NB-- 0 SB-- 0 EB-- 0 WB-- 0	NB-- 0 SB-- 0 EB-- 0 WB-- 0
ATSAC-1 or ATSAC+ATCS-2?	2	2	2	2	2
Override Capacity	0	0	0	0	0

	MOVEMENT	Existing Condition Volume	No. of Lanes	Lane Volume	Existing Plus Project Project Traffic	Total Volume	Lane Volume	Future Condition W/O Project Added Volume	Total Volume	No. of Lanes	Lane Volume	Future Condition W/ Project Added Volume	Total Volume	No. of Lanes	Lane Volume	Future W/ Project W/ Mitigation Added Volume	Total Volume	No. of Lanes	Lane Volume
NORTHBOUND	Left	57	0	**57**	0	57	**57**	0	60	0	**60**	0	60	0	**60**	0	60	0	**60**
	Left-Through		0							0				0				0	
	Through	57	0	158	0	57	158	0	60	0	166	0	60	0	166	0	60	0	166
	Through-Right		0							0				0				0	
	Right	44	0	0	0	44	0	0	46	0	0	0	46	0	0	0	46	0	0
	Left-Through-Right		1							1				1				1	
	Left-Right		0							0				0				0	
SOUTHBOUND	Left	51	0	51	0	51	51	0	53	0	53	0	53	0	53	0	53	0	53
	Left-Through		0							0				0				0	
	Through	38	0	**185**	0	38	**185**	0	40	0	**193**	0	40	0	**193**	0	40	0	**193**
	Through-Right		0							0				0				0	
	Right	96	0	0	0	96	0	0	100	0	0	0	100	0	0	0	100	0	0
	Left-Through-Right		1							1				1				1	
	Left-Right		0							0				0				0	
EASTBOUND	Left	98	1	98	0	98	98	0	102	1	102	0	102	1	102	0	102	1	102
	Left-Through		0							0				0				0	
	Through	752	1	**419**	20	772	**429**	1	787	1	**439**	20	807	1	**449**	0	807	1	**449**
	Through-Right		1							1				1				1	
	Right	86	0	86	0	86	86	0	90	0	90	0	90	0	90	0	90	0	90
	Left-Through-Right		0							0				0				0	
	Left-Right		0							0				0				0	
WESTBOUND	Left	68	1	**68**	0	68	**68**	0	71	1	**71**	0	71	1	**71**	0	71	1	**71**
	Left-Through		0							0				0				0	
	Through	659	1	346	20	679	356	1	690	1	362	20	710	1	372	0	710	1	372
	Through-Right		1							1				1				1	
	Right	32	0	32	0	32	32	0	33	0	33	0	33	0	33	0	33	0	33
	Left-Through-Right		0							0				0				0	
	Left-Right		0							0				0				0	
CRITICAL VOLUMES		North-South:		242	North-South:		242	North-South:			253	North-South:			253	North-South:			253
		East-West:		487	East-West:		497	East-West:			510	East-West:			520	East-West:			520
		SUM:		729	SUM:		739	SUM:			763	SUM:			773	SUM:			773
VOLUME/CAPACITY (V/C) RATIO:				0.486			0.493				0.509				0.515				0.515
V/C LESS ATSAC/ATCS ADJUSTMENT:				**0.386**			**0.393**				**0.409**				**0.415**				**0.415**
LEVEL OF SERVICE (LOS):				**A**			**A**				**A**				**A**				**A**

REMARKS: Alt. Route 3: Using only Sheldon Pit

Version: 1i Beta; 8/4/2011

PROJECT IMPACT

Change in *v/c* due to project:	0.006	Δ*v/c* after mitigation:	0.006
Significant impacted?	NO	Fully mitigated?	N/A

Level of Service Workheet
(Circular 212 Method)

I/S #:	North-South Street:	Telfair Avenue	Year of Count:	2015	Ambient Growth: (%):	1.5	Conducted by:	City Traffic Counters	Date:	4/28/2015
CMA18	East-West Street:	Paxton Street	Projection Year:	2018	Peak Hour:	Mid-Day	Reviewed by:		Project:	Pacoima Reservoir Project/1-13-4

	Existing Condition	Existing Plus Project	Future Condition W/O Project	Future Condition W/ Project	Future W/ Project W/ Mitigation
No. of Phases	2	2	2	2	2
Opposed Ø'ing: N/S-1, E/W-2 or Both-3?	0	0	0	0	0
Right Turns: FREE-1, NRTOR-2 or OLA-3?	NB-- 0 SB-- 0 EB-- 0 WB-- 0	NB-- 0 SB-- 0 EB-- 0 WB-- 0	NB-- 0 SB-- 0 EB-- 0 WB-- 0	NB-- 0 SB-- 0 EB-- 0 WB-- 0	NB-- 0 SB-- 0 EB-- 0 WB-- 0
ATSAC-1 or ATSAC+ATCS-2?	2	2	2	2	2
Override Capacity	0	0	0	0	0

	MOVEMENT	Existing Condition Volume	No. of Lanes	Lane Volume	Existing Plus Project Project Traffic	Total Volume	Lane Volume	Future Condition W/O Project Added Volume	Total Volume	No. of Lanes	Lane Volume	Future Condition W/ Project Added Volume	Total Volume	No. of Lanes	Lane Volume	Future W/ Project W/ Mitigation Added Volume	Total Volume	No. of Lanes	Lane Volume
NORTHBOUND	Left	25	0	**25**	0	25	**25**	0	26	0	**26**	0	26	0	**26**	0	26	0	**26**
	Left-Through		0							0				0				0	
	Through	13	0	75	0	13	75	0	14	0	79	0	14	0	79	0	14	0	79
	Through-Right		0							0				0				0	
	Right	37	0	0	0	37	0	0	39	0	0	0	39	0	0	0	39	0	0
	Left-Through-Right		1							1				1				1	
	Left-Right		0							0				0				0	
SOUTHBOUND	Left	16	0	16	0	16	16	0	17	0	17	0	17	0	17	0	17	0	17
	Left-Through		0							0				0				0	
	Through	13	0	**78**	0	13	**78**	0	14	0	**82**	0	14	0	**82**	0	14	0	**82**
	Through-Right		0							0				0				0	
	Right	49	0	0	0	49	0	0	51	0	0	0	51	0	0	0	51	0	0
	Left-Through-Right		1							1				1				1	
	Left-Right		0							0				0				0	
EASTBOUND	Left	67	1	**67**	0	67	**67**	0	70	1	**70**	0	70	1	**70**	0	70	1	**70**
	Left-Through		0							0				0				0	
	Through	456	1	239	20	476	249	1	478	1	251	20	498	1	261	0	498	1	261
	Through-Right		1							1				1				1	
	Right	22	0	22	0	22	22	0	23	0	23	0	23	0	23	0	23	0	23
	Left-Through-Right		0							0				0				0	
	Left-Right		0							0				0				0	
WESTBOUND	Left	26	1	26	0	26	26	0	27	1	27	0	27	1	27	0	27	1	27
	Left-Through		0							0				0				0	
	Through	470	1	**247**	20	490	**257**	1	492	1	**258**	20	512	1	**268**	0	512	1	**268**
	Through-Right		1							1				1				1	
	Right	23	0	23	0	23	23	0	24	0	24	0	24	0	24	0	24	0	24
	Left-Through-Right		0							0				0				0	
	Left-Right		0							0				0				0	
CRITICAL VOLUMES		North-South:		103	North-South:		103	North-South:			108	North-South:			108	North-South:			108
		East-West:		314	East-West:		324	East-West:			328	East-West:			338	East-West:			338
		SUM:		417	SUM:		427	SUM:			436	SUM:			446	SUM:			446
VOLUME/CAPACITY (V/C) RATIO:				0.278			0.285				0.291				0.297				0.297
V/C LESS ATSAC/ATCS ADJUSTMENT:				**0.178**			**0.185**				**0.191**				**0.197**				**0.197**
LEVEL OF SERVICE (LOS):				**A**			**A**				**A**				**A**				**A**

REMARKS: Alt. Route 3: Using only Sheldon Pit

Version: 1i Beta; 8/4/2011

PROJECT IMPACT

Change in *v/c* due to project:	0.006	Δ*v/c* after mitigation:	0.006
Significant impacted?	NO	Fully mitigated?	N/A

Level of Service Workheet
(Circular 212 Method)

I/S #:	North-South Street:	Telfair Avenue	Year of Count:	2015	Ambient Growth: (%):	1.5	Conducted by:	City Traffic Counters	Date:	4/28/2015
CMA18	East-West Street:	Paxton Street	Projection Year:	2018	Peak Hour:	PM	Reviewed by:		Project:	Pacoima Reservoir Project/1-13-4

No. of Phases				2				2				2				2				2			
Opposed Ø'ing: N/S-1, E/W-2 or Both-3?				0				0				0				0				0			
Right Turns: FREE-1, NRTOR-2 or OLA-3?	NB--	0	SB--	0	NB--	0	SB--	0	NB--	0	SB--	0	NB--	0	SB--	0	NB--	0	SB--	0			
	EB--	0	WB--	0	EB--	0	WB--	0	EB--	0	WB--	0	EB--	0	WB--	0	EB--	0	WB--	0			
ATSAC-1 or ATSAC+ATCS-2?				2				2				2				2				2			
Override Capacity				0				0				0				0				0			

MOVEMENT		EXISTING CONDITION			EXISTING PLUS PROJECT			FUTURE CONDITION W/O PROJECT				FUTURE CONDITION W/ PROJECT				FUTURE W/ PROJECT W/ MITIGATION			
		Volume	No. of Lanes	Lane Volume	Project Traffic	Total Volume	Lane Volume	Added Volume	Total Volume	No. of Lanes	Lane Volume	Added Volume	Total Volume	No. of Lanes	Lane Volume	Added Volume	Total Volume	No. of Lanes	Lane Volume
NORTHBOUND	Left	39	0	**39**	0	39	**39**	0	41	0	**41**	0	41	0	**41**	0	41	0	**41**
	Left-Through		0							0				0				0	
	Through	48	0	130	0	48	130	0	50	0	136	0	50	0	136	0	50	0	136
	Through-Right		0							0				0				0	
	Right	43	0	0	0	43	0	0	45	0	0	0	45	0	0	0	45	0	0
	Left-Through-Right		1							1				1				1	
	Left-Right		0							0				0				0	
SOUTHBOUND	Left	29	0	29	0	29	29	0	30	0	30	0	30	0	30	0	30	0	30
	Left-Through		0							0				0				0	
	Through	29	0	**122**	0	29	**122**	0	30	0	**127**	0	30	0	**127**	0	30	0	**127**
	Through-Right		0							0				0				0	
	Right	64	0	0	0	64	0	0	67	0	0	0	67	0	0	0	67	0	0
	Left-Through-Right		1							1				1				1	
	Left-Right		0							0				0				0	
EASTBOUND	Left	109	1	109	0	109	109	0	114	1	114	0	114	1	114	0	114	1	114
	Left-Through		0							0				0				0	
	Through	924	1	**486**	20	944	**496**	1	967	1	**509**	20	987	1	**519**	0	987	1	**519**
	Through-Right		1							1				1				1	
	Right	48	0	48	0	48	48	0	50	0	50	0	50	0	50	0	50	0	50
	Left-Through-Right		0							0				0				0	
	Left-Right		0							0				0				0	
WESTBOUND	Left	51	1	**51**	0	51	**51**	0	53	1	**53**	0	53	1	**53**	0	53	1	**53**
	Left-Through		0							0				0				0	
	Through	662	1	351	20	682	361	1	693	1	368	20	713	1	378	0	713	1	378
	Through-Right		1							1				1				1	
	Right	40	0	40	0	40	40	0	42	0	42	0	42	0	42	0	42	0	42
	Left-Through-Right		0							0				0				0	
	Left-Right		0							0				0				0	
CRITICAL VOLUMES			*North-South:*	161		*North-South:*	161			*North-South:*	168			*North-South:*	168			*North-South:*	168
			East-West:	537		*East-West:*	547			*East-West:*	562			*East-West:*	572			*East-West:*	572
			SUM:	698		*SUM:*	708			*SUM:*	730			*SUM:*	740			*SUM:*	740
VOLUME/CAPACITY *(V/C)* RATIO:				0.465			0.472				0.487				0.493				0.493
V/C LESS ATSAC/ATCS ADJUSTMENT:				**0.365**			**0.372**				**0.387**				**0.393**				**0.393**
LEVEL OF SERVICE (LOS):				**A**			**A**				**A**				**A**				**A**

REMARKS: Alt. Route 3: Using only Sheldon Pit

Version: 1i Beta; 8/4/2011

PROJECT IMPACT

Change in *v/c* due to project:	0.006	Δ*v/c* after mitigation:	0.006
Significant impacted?	NO	Fully mitigated?	N/A

Level of Service Workheet
(Circular 212 Method)

I/S #:	North-South Street:	San Fernando Road	Year of Count:	2015	Ambient Growth: (%):	1.5	Conducted by:	City Traffic Counters	Date:	4/28/2015
CMA19	East-West Street:	Paxton Street	Projection Year:	2018	Peak Hour:	AM	Reviewed by:		Project:	Pacoima Reservoir Project/1-13-4

No. of Phases				4				4				4				4				4		
Opposed Ø'ing: N/S-1, E/W-2 or Both-3?				2				2				2				2				2		
Right Turns: FREE-1, NRTOR-2 or OLA-3?	NB--	0	SB--	3	NB--	0	SB--	3	NB--	0	SB--	3	NB--	0	SB--	3	NB--	0	SB--	3		
	EB--	3	WB--	2	EB--	3	WB--	2	EB--	3	WB--	2	EB--	3	WB--	2	EB--	3	WB--	2		
ATSAC-1 or ATSAC+ATCS-2?				2				2				2				2				2		
Override Capacity				0				0				0				0				0		

	MOVEMENT	EXISTING CONDITION			EXISTING PLUS PROJECT			FUTURE CONDITION W/O PROJECT				FUTURE CONDITION W/ PROJECT				FUTURE W/ PROJECT W/ MITIGATION			
		Volume	No. of Lanes	Lane Volume	Project Traffic	Total Volume	Lane Volume	Added Volume	Total Volume	No. of Lanes	Lane Volume	Added Volume	Total Volume	No. of Lanes	Lane Volume	Added Volume	Total Volume	No. of Lanes	Lane Volume
NORTHBOUND	Left	33	1	33	20	53	53	0	35	1	35	20	55	1	55	0	55	1	55
	Left-Through		0							0				0				0	
	Through	696	2	**348**	0	696	**348**	12	740	2	**370**	0	740	2	**370**	0	740	2	**370**
	Through-Right		0							0				0				0	
	Right	383	1	304	0	383	304	0	400	1	318	0	400	1	318	0	400	1	318
	Left-Through-Right		0							0				0				0	
	Left-Right		0							0				0				0	
SOUTHBOUND	Left	153	1	**153**	0	153	**153**	0	160	1	**160**	0	160	1	**160**	0	160	1	**160**
	Left-Through		0							0				0				0	
	Through	749	2	375	0	749	375	20	803	2	402	0	803	2	402	0	803	2	402
	Through-Right		0							0				0				0	
	Right	278	1	180	0	278	180	0	291	1	189	0	291	1	189	0	291	1	189
	Left-Through-Right		0							0				0				0	
	Left-Right		0							0				0				0	
EASTBOUND	Left	98	1	98	0	98	98	0	102	1	102	0	102	1	102	0	102	1	102
	Left-Through		0							0				0				0	
	Through	741	2	**371**	0	741	**371**	1	776	2	**388**	0	776	2	**388**	0	776	2	**388**
	Through-Right		0							0				0				0	
	Right	44	1	11	20	64	11	0	46	1	11	20	66	1	11	0	66	1	11
	Left-Through-Right		0							0				0				0	
	Left-Right		0							0				0				0	
WESTBOUND	Left	158	1	158	0	158	158	0	165	1	165	0	165	1	165	0	165	1	165
	Left-Through		0							0				0				0	
	Through	533	1	**422**	0	533	**422**	1	558	1	**441**	0	558	1	**441**	0	558	1	**441**
	Through-Right		1							1				1				1	
	Right	310	0	310	0	310	310	0	324	0	324	0	324	0	324	0	324	0	324
	Left-Through-Right		0							0				0				0	
	Left-Right		0							0				0				0	
CRITICAL VOLUMES		*North-South:*		501	*North-South:*		501	*North-South:*			530	*North-South:*			530	*North-South:*			530
		East-West:		793	*East-West:*		793	*East-West:*			829	*East-West:*			829	*East-West:*			829
		SUM:		1294	*SUM:*		1294	*SUM:*			1359	*SUM:*			1359	*SUM:*			1359
VOLUME/CAPACITY *(V/C)* RATIO:				0.941			0.941				0.988				0.988				0.988
V/C LESS ATSAC/ATCS ADJUSTMENT:				**0.841**			**0.841**				**0.888**				**0.888**				**0.888**
LEVEL OF SERVICE (LOS):				**D**			**D**				**D**				**D**				**D**

REMARKS: Alt. Route 3: Using only Sheldon Pit

Version: 1i Beta; 8/4/2011

PROJECT IMPACT

Change in *v/c* due to project:	0.000	Δ*v/c* after mitigation:	0.000
Significant impacted?	NO	Fully mitigated?	N/A

Level of Service Workheet
(Circular 212 Method)

I/S #:	North-South Street:	San Fernando Road	Year of Count:	2015	Ambient Growth: (%):	1.5	Conducted by:	City Traffic Counters	Date:	4/28/2015
CMA19	East-West Street:	Paxton Street	Projection Year:	2018	Peak Hour:	Mid-Day	Reviewed by:		Project:	Pacoima Reservoir Project/1-13-4

No. of Phases				4				4				4				4				4	
Opposed Ø'ing: N/S-1, E/W-2 or Both-3?				2				2				2				2				2	
Right Turns: FREE-1, NRTOR-2 or OLA-3?	NB--	0	SB--	3	NB--	0	SB--	3	NB--	0	SB--	3	NB--	0	SB--	3	NB--	0	SB--	3	
	EB--	3	WB--	2	EB--	3	WB--	2	EB--	3	WB--	2	EB--	3	WB--	2	EB--	3	WB--	2	
ATSAC-1 or ATSAC+ATCS-2?				2				2				2				2				2	
Override Capacity				0				0				0				0				0	

	MOVEMENT	EXISTING CONDITION			EXISTING PLUS PROJECT			FUTURE CONDITION W/O PROJECT				FUTURE CONDITION W/ PROJECT				FUTURE W/ PROJECT W/ MITIGATION			
		Volume	No. of Lanes	Lane Volume	Project Traffic	Total Volume	Lane Volume	Added Volume	Total Volume	No. of Lanes	Lane Volume	Added Volume	Total Volume	No. of Lanes	Lane Volume	Added Volume	Total Volume	No. of Lanes	Lane Volume
NORTHBOUND	Left	50	1	50	20	70	70	0	52	1	52	20	72	1	72	0	72	1	72
	Left-Through		0							0				0				0	
	Through	759	2	**380**	0	759	**380**	9	803	2	**402**	0	803	2	**402**	0	803	2	**402**
	Through-Right		0							0				0				0	
	Right	286	1	205	0	286	205	0	299	1	215	0	299	1	215	0	299	1	215
	Left-Through-Right		0							0				0				0	
	Left-Right		0							0				0				0	
SOUTHBOUND	Left	169	1	**169**	0	169	**169**	0	177	1	**177**	0	177	1	**177**	0	177	1	**177**
	Left-Through		0							0				0				0	
	Through	553	2	277	0	553	277	7	585	2	293	0	585	2	293	0	585	2	293
	Through-Right		0							0				0				0	
	Right	178	1	77	0	178	77	0	186	1	80	0	186	1	80	0	186	1	80
	Left-Through-Right		0							0				0				0	
	Left-Right		0							0				0				0	
EASTBOUND	Left	101	1	101	0	101	101	0	106	1	106	0	106	1	106	0	106	1	106
	Left-Through		0							0				0				0	
	Through	326	2	**163**	0	326	**163**	1	342	2	**171**	0	342	2	**171**	0	342	2	**171**
	Through-Right		0							0				0				0	
	Right	152	1	102	20	172	102	0	159	1	107	20	179	1	107	0	179	1	107
	Left-Through-Right		0							0				0				0	
	Left-Right		0							0				0				0	
WESTBOUND	Left	162	1	162	0	162	162	0	169	1	169	0	169	1	169	0	169	1	169
	Left-Through		0							0				0				0	
	Through	386	1	**371**	0	386	**371**	1	405	1	**389**	0	405	1	**389**	0	405	1	**389**
	Through-Right		1							1				1				1	
	Right	356	0	356	0	356	356	0	372	0	372	0	372	0	372	0	372	0	372
	Left-Through-Right		0							0				0				0	
	Left-Right		0							0				0				0	
CRITICAL VOLUMES			*North-South:*	549		*North-South:*	549		*North-South:*	579			*North-South:*	579			*North-South:*	579	
			East-West:	534		*East-West:*	534		*East-West:*	560			*East-West:*	560			*East-West:*	560	
			SUM:	1083		*SUM:*	1083		*SUM:*	1139			*SUM:*	1139			*SUM:*	1139	
VOLUME/CAPACITY *(V/C)* RATIO:				0.788			0.788				0.828				0.828				0.828
V/C LESS ATSAC/ATCS ADJUSTMENT:				**0.688**			**0.688**				**0.728**				**0.728**				**0.728**
LEVEL OF SERVICE (LOS):				**B**			**B**				**C**				**C**				**C**

REMARKS: Alt. Route 3: Using only Sheldon Pit

Version: 1i Beta; 8/4/2011

PROJECT IMPACT

Change in *v/c* due to project:	0.000	Δ*v/c* after mitigation:	0.000
Significant impacted?	NO	Fully mitigated?	N/A

Level of Service Workheet
(Circular 212 Method)

I/S #:	North-South Street:	San Fernando Road	Year of Count:	2015	Ambient Growth: (%):	1.5	Conducted by:	City Traffic Counters	Date:	4/28/2015
CMA19	East-West Street:	Paxton Street	Projection Year:	2018	Peak Hour:	PM	Reviewed by:		Project:	Pacoima Reservoir Project/1-13-4

No. of Phases				4				4				4				4				4		
Opposed Ø'ing: N/S-1, E/W-2 or Both-3?				2				2				2				2				2		
Right Turns: FREE-1, NRTOR-2 or OLA-3?	NB--	0	SB--	3	NB--	0	SB--	3	NB--	0	SB--	3	NB--	0	SB--	3	NB--	0	SB--	3		
	EB--	3	WB--	2	EB--	3	WB--	2	EB--	3	WB--	2	EB--	3	WB--	2	EB--	3	WB--	2		
ATSAC-1 or ATSAC+ATCS-2?				2				2				2				2				2		
Override Capacity				0				0				0				0				0		

	MOVEMENT	EXISTING CONDITION			EXISTING PLUS PROJECT			FUTURE CONDITION W/O PROJECT				FUTURE CONDITION W/ PROJECT				FUTURE W/ PROJECT W/ MITIGATION			
		Volume	No. of Lanes	Lane Volume	Project Traffic	Total Volume	Lane Volume	Added Volume	Total Volume	No. of Lanes	Lane Volume	Added Volume	Total Volume	No. of Lanes	Lane Volume	Added Volume	Total Volume	No. of Lanes	Lane Volume
NORTHBOUND	Left	45	1	45	20	65	65	0	47	1	47	20	67	1	67	0	67	1	67
	Left-Through		0							0				0				0	
	Through	715	2	**358**	0	715	**358**	14	762	2	**381**	0	762	2	**381**	0	762	2	**381**
	Through-Right		0							0				0				0	
	Right	293	1	214	0	293	214	0	306	1	223	0	306	1	223	0	306	1	223
	Left-Through-Right		0							0				0				0	
	Left-Right		0							0				0				0	
SOUTHBOUND	Left	139	1	**139**	0	139	**139**	0	145	1	**145**	0	145	1	**145**	0	145	1	**145**
	Left-Through		0							0				0				0	
	Through	727	2	364	0	727	364	10	770	2	385	0	770	2	385	0	770	2	385
	Through-Right		0							0				0				0	
	Right	169	1	48	0	169	48	0	177	1	50	0	177	1	50	0	177	1	50
	Left-Through-Right		0							0				0				0	
	Left-Right		0							0				0				0	
EASTBOUND	Left	121	1	121	0	121	121	0	127	1	127	0	127	1	127	0	127	1	127
	Left-Through		0							0				0				0	
	Through	642	2	**321**	0	642	**321**	1	672	2	**336**	0	672	2	**336**	0	672	2	**336**
	Through-Right		0							0				0				0	
	Right	191	1	146	20	211	146	0	200	1	153	20	220	1	153	0	220	1	153
	Left-Through-Right		0							0				0				0	
	Left-Right		0							0				0				0	
WESTBOUND	Left	159	1	159	0	159	159	0	166	1	166	0	166	1	166	0	166	1	166
	Left-Through		0							0				0				0	
	Through	556	1	**442**	0	556	**442**	1	582	1	**463**	0	582	1	**463**	0	582	1	**463**
	Through-Right		1							1				1				1	
	Right	328	0	328	0	328	328	0	343	0	343	0	343	0	343	0	343	0	343
	Left-Through-Right		0							0				0				0	
	Left-Right		0							0				0				0	
CRITICAL VOLUMES			*North-South:*	497		*North-South:*	497			*North-South:*	526			*North-South:*	526			*North-South:*	526
			East-West:	763		*East-West:*	763			*East-West:*	799			*East-West:*	799			*East-West:*	799
			SUM:	1260		*SUM:*	1260			*SUM:*	1325			*SUM:*	1325			*SUM:*	1325
VOLUME/CAPACITY *(V/C)* RATIO:				0.916			0.916				0.964				0.964				0.964
V/C LESS ATSAC/ATCS ADJUSTMENT:				**0.816**			**0.816**				**0.864**				**0.864**				**0.864**
LEVEL OF SERVICE (LOS):				**D**			**D**				**D**				**D**				**D**

REMARKS: Alt. Route 3: Using only Sheldon Pit

Version: 1i Beta; 8/4/2011

PROJECT IMPACT

Change in *v/c* due to project:	0.000	Δ*v/c* after mitigation:	0.000
Significant impacted?	NO	Fully mitigated?	N/A

Level of Service Workheet
(Circular 212 Method)

I/S #:	North-South Street:	San Fernando Road	Year of Count:	2015	Ambient Growth: (%):	1.5	Conducted by:	City Traffic Counters	Date:	4/28/2015
CMA20	East-West Street:	SR-118 Freeway EB Ramps	Projection Year:	2018	Peak Hour:	AM	Reviewed by:		Project:	Pacoima Reservoir Project/1-13-4

No. of Phases				2				2				2				2				2			
Opposed Ø'ing: N/S-1, E/W-2 or Both-3?				0				0				0				0				0			
Right Turns: FREE-1, NRTOR-2 or OLA-3?	NB--	0	SB--	3	NB--	0	SB--	3	NB--	0	SB--	3	NB--	0	SB--	3	NB--	0	SB--	3	NB--	0	SB--	3
	EB--	0	WB--	0	EB--	0	WB--	0	EB--	0	WB--	0	EB--	0	WB--	0	EB--	0	WB--	0	EB--	0	WB--	0
ATSAC-1 or ATSAC+ATCS-2?				2				2				2				2				2				2
Override Capacity				0				0				0				0				0				0

	MOVEMENT	EXISTING CONDITION			EXISTING PLUS PROJECT			FUTURE CONDITION W/O PROJECT				FUTURE CONDITION W/ PROJECT				FUTURE W/ PROJECT W/ MITIGATION			
		Volume	No. of Lanes	Lane Volume	Project Traffic	Total Volume	Lane Volume	Added Volume	Total Volume	No. of Lanes	Lane Volume	Added Volume	Total Volume	No. of Lanes	Lane Volume	Added Volume	Total Volume	No. of Lanes	Lane Volume
NORTHBOUND	Left	92	1	**92**	0	92	**92**	0	96	1	**96**	0	96	1	**96**	0	96	1	**96**
	Left-Through		0							0				0				0	
	Through	621	2	311	20	641	321	12	661	2	331	20	681	2	341	0	681	2	341
	Through-Right		0							0				0				0	
	Right	0	0	0	0	0	0	0	0	0	0	0	0	0	0	0	0	0	0
	Left-Through-Right		0							0				0				0	
	Left-Right		0							0				0				0	
SOUTHBOUND	Left	0	0	0	0	0	0	0	0	0	0	0	0	0	0	0	0	0	0
	Left-Through		0							0				0				0	
	Through	789	2	**395**	20	809	**405**	20	845	2	**423**	20	865	2	**433**	0	865	2	**433**
	Through-Right		0							0				0				0	
	Right	218	1	0	0	218	0	0	228	1	0	0	228	1	0	0	228	1	0
	Left-Through-Right		0							0				0				0	
	Left-Right		0							0				0				0	
EASTBOUND	Left	517	1	477	0	517	477	0	541	1	499	0	541	1	499	0	541	1	499
	Left-Through		0							0				0				0	
	Through	0	0	0	0	0	0	0	0	0	0	0	0	0	0	0	0	0	0
	Through-Right		0							0				0				0	
	Right	436	0	**477**	0	436	**477**	0	456	0	**499**	0	456	0	**499**	0	456	0	**499**
	Left-Through-Right		0							0				0				0	
	Left-Right		1							1				1				1	
WESTBOUND	Left	0	0	**0**	0	0	**0**	0	0	0	**0**	0	0	0	**0**	0	0	0	**0**
	Left-Through		0							0				0				0	
	Through	0	0	0	0	0	0	0	0	0	0	0	0	0	0	0	0	0	0
	Through-Right		0							0				0				0	
	Right	0	0	0	0	0	0	0	0	0	0	0	0	0	0	0	0	0	0
	Left-Through-Right		0							0				0				0	
	Left-Right		0							0				0				0	
CRITICAL VOLUMES		North-South:		487	North-South:		497	North-South:			519	North-South:			529	North-South:			529
		East-West:		477	East-West:		477	East-West:			499	East-West:			499	East-West:			499
		SUM:		964	SUM:		974	SUM:			1018	SUM:			1028	SUM:			1028
VOLUME/CAPACITY (V/C) RATIO:				0.643			0.649				0.679				0.685				0.685
V/C LESS ATSAC/ATCS ADJUSTMENT:				**0.543**			**0.549**				**0.579**				**0.585**				**0.585**
LEVEL OF SERVICE (LOS):				**A**			**A**				**A**				**A**				**A**

REMARKS: Alt. Route 3: Using only Sheldon Pit

Version: 1i Beta; 8/4/2011

PROJECT IMPACT

Change in *v/c* due to project:	0.006	Δ*v/c* after mitigation:	0.006
Significant impacted?	NO	Fully mitigated?	N/A

Level of Service Workheet
(Circular 212 Method)

I/S #:	North-South Street:	San Fernando Road	Year of Count:	2015	Ambient Growth: (%):	1.5	Conducted by:	City Traffic Counters	Date:	4/28/2015
CMA20	East-West Street:	SR-118 Freeway EB Ramps	Projection Year:	2018	Peak Hour:	Mid-Day	Reviewed by:		Project:	Pacoima Reservoir Project/1-13-4

No. of Phases				2				2				2				2				2			
Opposed Ø'ing: N/S-1, E/W-2 or Both-3?				0				0				0				0				0			
Right Turns: FREE-1, NRTOR-2 or OLA-3?	NB--	0	SB--	3	NB--	0	SB--	3	NB--	0	SB--	3	NB--	0	SB--	3	NB--	0	SB--	3	NB--	0	SB--	3
	EB--	0	WB--	0	EB--	0	WB--	0	EB--	0	WB--	0	EB--	0	WB--	0	EB--	0	WB--	0	EB--	0	WB--	0
ATSAC-1 or ATSAC+ATCS-2?				2				2				2				2				2				2
Override Capacity				0				0				0				0				0				0

MOVEMENT		EXISTING CONDITION			EXISTING PLUS PROJECT			FUTURE CONDITION W/O PROJECT				FUTURE CONDITION W/ PROJECT				FUTURE W/ PROJECT W/ MITIGATION			
		Volume	No. of Lanes	Lane Volume	Project Traffic	Total Volume	Lane Volume	Added Volume	Total Volume	No. of Lanes	Lane Volume	Added Volume	Total Volume	No. of Lanes	Lane Volume	Added Volume	Total Volume	No. of Lanes	Lane Volume
NORTHBOUND	Left	68	1	**68**	0	68	**68**	0	71	1	**71**	0	71	1	**71**	0	71	1	**71**
	Left-Through		0							0				0				0	
	Through	625	2	313	20	645	323	9	663	2	332	20	683	2	342	0	683	2	342
	Through-Right		0							0				0				0	
	Right	0	0	0	0	0	0	0	0	0	0	0	0	0	0	0	0	0	0
	Left-Through-Right		0							0				0				0	
	Left-Right		0							0				0				0	
SOUTHBOUND	Left	0	0	0	0	0	0	0	0	0	0	0	0	0	0	0	0	0	0
	Left-Through		0							0				0				0	
	Through	644	2	**322**	20	664	**332**	7	680	2	**340**	20	700	2	**350**	0	700	2	**350**
	Through-Right		0							0				0				0	
	Right	176	1	0	0	176	0	0	184	1	0	0	184	1	0	0	184	1	0
	Left-Through-Right		0							0				0				0	
	Left-Right		0							0				0				0	
EASTBOUND	Left	525	1	343	0	525	343	0	549	1	359	0	549	1	359	0	549	1	359
	Left-Through		0							0				0				0	
	Through	0	0	0	0	0	0	0	0	0	0	0	0	0	0	0	0	0	0
	Through-Right		0							0				0				0	
	Right	161	0	**343**	0	161	**343**	0	168	0	**359**	0	168	0	**359**	0	168	0	**359**
	Left-Through-Right		0							0				0				0	
	Left-Right		1							1				1				1	
WESTBOUND	Left	0	0	**0**	0	0	**0**	0	0	0	**0**	0	0	0	**0**	0	0	0	**0**
	Left-Through		0							0				0				0	
	Through	0	0	0	0	0	0	0	0	0	0	0	0	0	0	0	0	0	0
	Through-Right		0							0				0				0	
	Right	0	0	0	0	0	0	0	0	0	0	0	0	0	0	0	0	0	0
	Left-Through-Right		0							0				0				0	
	Left-Right		0							0				0				0	
CRITICAL VOLUMES			*North-South:*	390		*North-South:*	400			*North-South:*	411			*North-South:*	421			*North-South:*	421
			East-West:	343		*East-West:*	343			*East-West:*	359			*East-West:*	359			*East-West:*	359
			SUM:	733		*SUM:*	743			*SUM:*	770			*SUM:*	780			*SUM:*	780
VOLUME/CAPACITY *(V/C)* RATIO:				0.489			0.495				0.513				0.520				0.520
V/C LESS ATSAC/ATCS ADJUSTMENT:				**0.389**			**0.395**				**0.413**				**0.420**				**0.420**
LEVEL OF SERVICE (LOS):				**A**			**A**				**A**				**A**				**A**

REMARKS: Alt. Route 3: Using only Sheldon Pit

Version: 1i Beta; 8/4/2011

PROJECT IMPACT

Change in *v/c* due to project:	0.007	Δ*v/c* after mitigation:	0.007
Significant impacted?	NO	Fully mitigated?	N/A

Level of Service Workheet
(Circular 212 Method)

I/S #:	North-South Street:	San Fernando Road	Year of Count:	2015	Ambient Growth: (%):	1.5	Conducted by:	City Traffic Counters	Date:	4/28/2015
CMA20	East-West Street:	SR-118 Freeway EB Ramps	Projection Year:	2018	Peak Hour:	PM	Reviewed by:		Project:	Pacoima Reservoir Project/1-13-4

No. of Phases				2				2				2				2				2			
Opposed Ø'ing: N/S-1, E/W-2 or Both-3?				0				0				0				0				0			
Right Turns: FREE-1, NRTOR-2 or OLA-3?	NB--	0	SB--	3	NB--	0	SB--	3	NB--	0	SB--	3	NB--	0	SB--	3	NB--	0	SB--	3	NB--	0	SB--	3
	EB--	0	WB--	0	EB--	0	WB--	0	EB--	0	WB--	0	EB--	0	WB--	0	EB--	0	WB--	0	EB--	0	WB--	0
ATSAC-1 or ATSAC+ATCS-2?				2				2				2				2				2				2
Override Capacity				0				0				0				0				0				0

	MOVEMENT	EXISTING CONDITION			EXISTING PLUS PROJECT			FUTURE CONDITION W/O PROJECT				FUTURE CONDITION W/ PROJECT				FUTURE W/ PROJECT W/ MITIGATION			
		Volume	No. of Lanes	Lane Volume	Project Traffic	Total Volume	Lane Volume	Added Volume	Total Volume	No. of Lanes	Lane Volume	Added Volume	Total Volume	No. of Lanes	Lane Volume	Added Volume	Total Volume	No. of Lanes	Lane Volume
NORTHBOUND	Left	124	1	**124**	0	124	**124**	0	130	1	**130**	0	130	1	**130**	0	130	1	**130**
	Left-Through		0							0				0				0	
	Through	803	2	402	20	823	412	14	854	2	427	20	874	2	437	0	874	2	437
	Through-Right		0							0				0				0	
	Right	0	0	0	0	0	0	0	0	0	0	0	0	0	0	0	0	0	0
	Left-Through-Right		0							0				0				0	
	Left-Right		0							0				0				0	
SOUTHBOUND	Left	0	0	0	0	0	0	0	0	0	0	0	0	0	0	0	0	0	0
	Left-Through		0							0				0				0	
	Through	826	2	**413**	20	846	**423**	10	874	2	**437**	20	894	2	**447**	0	894	2	**447**
	Through-Right		0							0				0				0	
	Right	256	1	0	0	256	0	0	268	1	0	0	268	1	0	0	268	1	0
	Left-Through-Right		0							0				0				0	
	Left-Right		0							0				0				0	
EASTBOUND	Left	500	1	375	0	500	375	0	523	1	392	0	523	1	392	0	523	1	392
	Left-Through		0							0				0				0	
	Through	0	0	0	0	0	0	0	0	0	0	0	0	0	0	0	0	0	0
	Through-Right		0							0				0				0	
	Right	250	0	**375**	0	250	**375**	0	261	0	**392**	0	261	0	**392**	0	261	0	**392**
	Left-Through-Right		0							0				0				0	
	Left-Right		1							1				1				1	
WESTBOUND	Left	0	0	**0**	0	0	**0**	0	0	0	**0**	0	0	0	**0**	0	0	0	**0**
	Left-Through		0							0				0				0	
	Through	0	0	0	0	0	0	0	0	0	0	0	0	0	0	0	0	0	0
	Through-Right		0							0				0				0	
	Right	0	0	0	0	0	0	0	0	0	0	0	0	0	0	0	0	0	0
	Left-Through-Right		0							0				0				0	
	Left-Right		0							0				0				0	
CRITICAL VOLUMES		North-South:		537	North-South:		547	North-South:			567	North-South:			577	North-South:			577
		East-West:		375	East-West:		375	East-West:			392	East-West:			392	East-West:			392
		SUM:		912	SUM:		922	SUM:			959	SUM:			969	SUM:			969
VOLUME/CAPACITY (V/C) RATIO:				0.608			0.615				0.639				0.646				0.646
V/C LESS ATSAC/ATCS ADJUSTMENT:				**0.508**			**0.515**				**0.539**				**0.546**				**0.546**
LEVEL OF SERVICE (LOS):				**A**			**A**				**A**				**A**				**A**

REMARKS: Alt. Route 3: Using only Sheldon Pit

Version: 1i Beta; 8/4/2011

PROJECT IMPACT

Change in *v/c* due to project:	0.007	Δ*v/c* after mitigation:	0.007
Significant impacted?	NO	Fully mitigated?	N/A

Level of Service Workheet
(Circular 212 Method)

I/S #:	North-South Street:	San Fernando Road	Year of Count:	2015	Ambient Growth: (%):	1.5	Conducted by:	City Traffic Counters	Date:	4/28/2015
CMA21	East-West Street:	Van Nuys Boulevard	Projection Year:	2018	Peak Hour:	AM	Reviewed by:		Project:	Pacoima Reservoir Project/1-13-4

No. of Phases				4				4				4				4				4			
Opposed Ø'ing: N/S-1, E/W-2 or Both-3?				0				0				0				0				0			
Right Turns: FREE-1, NRTOR-2 or OLA-3?	NB--	0	SB--	0	NB--	0	SB--	0	NB--	0	SB--	0	NB--	0	SB--	0	NB--	0	SB--	0			
	EB--	3	WB--	2	EB--	3	WB--	2	EB--	3	WB--	2	EB--	3	WB--	2	EB--	3	WB--	2			
ATSAC-1 or ATSAC+ATCS-2?				2				2				2				2				2			
Override Capacity				0				0				0				0				0			

	MOVEMENT	EXISTING CONDITION			EXISTING PLUS PROJECT			FUTURE CONDITION W/O PROJECT				FUTURE CONDITION W/ PROJECT				FUTURE W/ PROJECT W/ MITIGATION			
		Volume	No. of Lanes	Lane Volume	Project Traffic	Total Volume	Lane Volume	Added Volume	Total Volume	No. of Lanes	Lane Volume	Added Volume	Total Volume	No. of Lanes	Lane Volume	Added Volume	Total Volume	No. of Lanes	Lane Volume
NORTHBOUND	Left	41	1	**41**	0	41	**41**	2	45	1	**45**	0	45	1	**45**	0	45	1	**45**
	Left-Through		0							0				0				0	
	Through	475	1	309	20	495	319	11	508	1	329	20	528	1	339	0	528	1	339
	Through-Right		1							1				1				1	
	Right	143	0	143	0	143	143	0	150	0	150	0	150	0	150	0	150	0	150
	Left-Through-Right		0							0				0				0	
	Left-Right		0							0				0				0	
SOUTHBOUND	Left	183	1	183	0	183	183	0	191	1	191	0	191	1	191	0	191	1	191
	Left-Through		0							0				0				0	
	Through	949	1	**511**	20	969	**521**	19	1011	1	**544**	20	1031	1	**554**	0	1031	1	**554**
	Through-Right		1							1				1				1	
	Right	72	0	72	0	72	72	1	76	0	76	0	76	0	76	0	76	0	76
	Left-Through-Right		0							0				0				0	
	Left-Right		0							0				0				0	
EASTBOUND	Left	111	1	111	0	111	111	1	117	1	117	0	117	1	117	0	117	1	117
	Left-Through		0							0				0				0	
	Through	858	2	**429**	0	858	**429**	24	921	2	**461**	0	921	2	**461**	0	921	2	**461**
	Through-Right		0							0				0				0	
	Right	51	1	10	0	51	10	1	54	1	9	0	54	1	9	0	54	1	9
	Left-Through-Right		0							0				0				0	
	Left-Right		0							0				0				0	
WESTBOUND	Left	216	1	**216**	0	216	**216**	0	226	1	**226**	0	226	1	**226**	0	226	1	**226**
	Left-Through		0							0				0				0	
	Through	807	2	404	0	807	404	20	864	2	432	0	864	2	432	0	864	2	432
	Through-Right		0							0				0				0	
	Right	106	1	106	0	106	106	0	111	1	111	0	111	1	111	0	111	1	111
	Left-Through-Right		0							0				0				0	
	Left-Right		0							0				0				0	
CRITICAL VOLUMES		North-South:		552	North-South:		562	North-South:			589	North-South:			599	North-South:			599
		East-West:		645	East-West:		645	East-West:			687	East-West:			687	East-West:			687
		SUM:		1197	SUM:		1207	SUM:			1276	SUM:			1286	SUM:			1286
VOLUME/CAPACITY (V/C) RATIO:				0.871			0.878				0.928				0.935				0.935
V/C LESS ATSAC/ATCS ADJUSTMENT:				0.771			0.778				0.828				0.835				0.835
LEVEL OF SERVICE (LOS):				C			C				D				D				D

REMARKS: Alt. Route 3: Using only Sheldon Pit

Version: 1i Beta; 8/4/2011

PROJECT IMPACT

Change in *v/c* due to project:	0.007	Δ*v/c* after mitigation:	0.007
Significant impacted?	NO	Fully mitigated?	N/A

Level of Service Workheet
(Circular 212 Method)

I/S #:	North-South Street:	San Fernando Road	Year of Count:	2015	Ambient Growth: (%):	1.5	Conducted by:	City Traffic Counters	Date:	4/28/2015
CMA21	East-West Street:	Van Nuys Boulevard	Projection Year:	2018	Peak Hour:	Mid-Day	Reviewed by:		Project:	Pacoima Reservoir Project/1-13-4

No. of Phases				4				4				4				4				4			
Opposed Ø'ing: N/S-1, E/W-2 or Both-3?				0				0				0				0				0			
Right Turns: FREE-1, NRTOR-2 or OLA-3?	NB--	0	SB--	0	NB--	0	SB--	0	NB--	0	SB--	0	NB--	0	SB--	0	NB--	0	SB--	0			
	EB--	3	WB--	2	EB--	3	WB--	2	EB--	3	WB--	2	EB--	3	WB--	2	EB--	3	WB--	2			
ATSAC-1 or ATSAC+ATCS-2?				2				2				2				2				2			
Override Capacity				0				0				0				0				0			

	MOVEMENT	EXISTING CONDITION			EXISTING PLUS PROJECT			FUTURE CONDITION W/O PROJECT				FUTURE CONDITION W/ PROJECT				FUTURE W/ PROJECT W/ MITIGATION			
		Volume	No. of Lanes	Lane Volume	Project Traffic	Total Volume	Lane Volume	Added Volume	Total Volume	No. of Lanes	Lane Volume	Added Volume	Total Volume	No. of Lanes	Lane Volume	Added Volume	Total Volume	No. of Lanes	Lane Volume
NORTHBOUND	Left	58	1	58	0	58	58	2	63	1	63	0	63	1	63	0	63	1	63
	Left-Through		0							0				0				0	
	Through	460	1	**273**	20	480	**283**	8	489	1	**290**	20	509	1	**300**	0	509	1	**300**
	Through-Right		1							1				1				1	
	Right	86	0	86	0	86	86	0	90	0	90	0	90	0	90	0	90	0	90
	Left-Through-Right		0							0				0				0	
	Left-Right		0							0				0				0	
SOUTHBOUND	Left	97	1	**97**	0	97	**97**	0	101	1	**101**	0	101	1	**101**	0	101	1	**101**
	Left-Through		0							0				0				0	
	Through	435	1	282	20	455	292	6	461	1	299	20	481	1	309	0	481	1	309
	Through-Right		1							1				1				1	
	Right	129	0	129	0	129	129	1	136	0	136	0	136	0	136	0	136	0	136
	Left-Through-Right		0							0				0				0	
	Left-Right		0							0				0				0	
EASTBOUND	Left	117	1	**117**	0	117	**117**	1	123	1	**123**	0	123	1	**123**	0	123	1	**123**
	Left-Through		0							0				0				0	
	Through	680	2	340	0	680	340	1	712	2	356	0	712	2	356	0	712	2	356
	Through-Right		0							0				0				0	
	Right	92	1	34	0	92	34	1	97	1	34	0	97	1	34	0	97	1	34
	Left-Through-Right		0							0				0				0	
	Left-Right		0							0				0				0	
WESTBOUND	Left	71	1	71	0	71	71	0	74	1	74	0	74	1	74	0	74	1	74
	Left-Through		0							0				0				0	
	Through	605	2	**303**	0	605	**303**	1	634	2	**317**	0	634	2	**317**	0	634	2	**317**
	Through-Right		0							0				0				0	
	Right	81	1	81	0	81	81	0	85	1	85	0	85	1	85	0	85	1	85
	Left-Through-Right		0							0				0				0	
	Left-Right		0							0				0				0	
CRITICAL VOLUMES		*North-South:*		370	*North-South:*		380	*North-South:*			391	*North-South:*			401	*North-South:*			401
		East-West:		420	*East-West:*		420	*East-West:*			440	*East-West:*			440	*East-West:*			440
		SUM:		790	*SUM:*		800	*SUM:*			831	*SUM:*			841	*SUM:*			841
VOLUME/CAPACITY *(V/C)* RATIO:				0.575			0.582				0.604				0.612				0.612
V/C LESS ATSAC/ATCS ADJUSTMENT:				**0.475**			**0.482**				**0.504**				**0.512**				**0.512**
LEVEL OF SERVICE (LOS):				**A**			**A**				**A**				**A**				**A**

REMARKS: Alt. Route 3: Using only Sheldon Pit

Version: 1i Beta; 8/4/2011

PROJECT IMPACT

Change in *v/c* due to project:	0.008	Δ*v/c* after mitigation:	0.008
Significant impacted?	NO	Fully mitigated?	N/A

Level of Service Workheet
(Circular 212 Method)

I/S #:	North-South Street:	San Fernando Road	Year of Count:	2015	Ambient Growth: (%):	1.5	Conducted by:	City Traffic Counters	Date:	4/28/2015
CMA21	East-West Street:	Van Nuys Boulevard	Projection Year:	2018	Peak Hour:	PM	Reviewed by:		Project:	Pacoima Reservoir Project/1-13-4

No. of Phases				4				4				4				4				4			
Opposed Ø'ing: N/S-1, E/W-2 or Both-3?				0				0				0				0				0			
Right Turns: FREE-1, NRTOR-2 or OLA-3?	NB--	0	SB--	0	NB--	0	SB--	0	NB--	0	SB--	0	NB--	0	SB--	0	NB--	0	SB--	0			
	EB--	3	WB--	2	EB--	3	WB--	2	EB--	3	WB--	2	EB--	3	WB--	2	EB--	3	WB--	2			
ATSAC-1 or ATSAC+ATCS-2?				2				2				2				2				2			
Override Capacity				0				0				0				0				0			

	MOVEMENT	EXISTING CONDITION			EXISTING PLUS PROJECT			FUTURE CONDITION W/O PROJECT				FUTURE CONDITION W/ PROJECT				FUTURE W/ PROJECT W/ MITIGATION			
		Volume	No. of Lanes	Lane Volume	Project Traffic	Total Volume	Lane Volume	Added Volume	Total Volume	No. of Lanes	Lane Volume	Added Volume	Total Volume	No. of Lanes	Lane Volume	Added Volume	Total Volume	No. of Lanes	Lane Volume
NORTHBOUND	Left	85	1	85	0	85	85	2	91	1	91	0	91	1	91	0	91	1	91
	Left-Through		0							0				0				0	
	Through	628	1	**365**	20	648	**375**	13	670	1	**389**	20	690	1	**399**	0	690	1	**399**
	Through-Right		1							1				1				1	
	Right	102	0	102	0	102	102	0	107	0	107	0	107	0	107	0	107	0	107
	Left-Through-Right		0							0				0				0	
	Left-Right		0							0				0				0	
SOUTHBOUND	Left	139	1	**139**	0	139	**139**	0	145	1	**145**	0	145	1	**145**	0	145	1	**145**
	Left-Through		0							0				0				0	
	Through	575	1	365	20	595	375	9	610	1	387	20	630	1	397	0	630	1	397
	Through-Right		1							1				1				1	
	Right	155	0	155	0	155	155	1	163	0	163	0	163	0	163	0	163	0	163
	Left-Through-Right		0							0				0				0	
	Left-Right		0							0				0				0	
EASTBOUND	Left	82	1	82	0	82	82	1	87	1	87	0	87	1	87	0	87	1	87
	Left-Through		0							0				0				0	
	Through	848	2	**424**	0	848	**424**	14	901	2	**451**	0	901	2	**451**	0	901	2	**451**
	Through-Right		0							0				0				0	
	Right	112	1	27	0	112	27	1	118	1	27	0	118	1	27	0	118	1	27
	Left-Through-Right		0							0				0				0	
	Left-Right		0							0				0				0	
WESTBOUND	Left	115	1	**115**	0	115	**115**	0	120	1	**120**	0	120	1	**120**	0	120	1	**120**
	Left-Through		0							0				0				0	
	Through	889	2	445	0	889	445	15	945	2	473	0	945	2	473	0	945	2	473
	Through-Right		0							0				0				0	
	Right	107	1	107	0	107	107	0	112	1	112	0	112	1	112	0	112	1	112
	Left-Through-Right		0							0				0				0	
	Left-Right		0							0				0				0	
CRITICAL VOLUMES		*North-South:*		504	*North-South:*		514	*North-South:*			534	*North-South:*			544	*North-South:*			544
		East-West:		539	*East-West:*		539	*East-West:*			571	*East-West:*			571	*East-West:*			571
		SUM:		1043	*SUM:*		1053	*SUM:*			1105	*SUM:*			1115	*SUM:*			1115
VOLUME/CAPACITY *(V/C)* RATIO:				0.759			0.766				0.804				0.811				0.811
V/C LESS ATSAC/ATCS ADJUSTMENT:				**0.659**			**0.666**				**0.704**				**0.711**				**0.711**
LEVEL OF SERVICE (LOS):				**B**			**B**				**C**				**C**				**C**

REMARKS: Alt. Route 3: Using only Sheldon Pit

Version: 1i Beta; 8/4/2011

PROJECT IMPACT

Change in *v/c* due to project:	0.007	Δ*v/c* after mitigation:	0.007
Significant impacted?	NO	Fully mitigated?	N/A

Level of Service Workheet
(Circular 212 Method)

I/S #:	North-South Street:	San Fernando Road	Year of Count:	2015	Ambient Growth: (%):	1.5	Conducted by:	City Traffic Counters	Date:	4/28/2015
CMA22	East-West Street:	Pierce Street	Projection Year:	2018	Peak Hour:	AM	Reviewed by:		Project:	Pacoima Reservoir Project/1-13-4

No. of Phases				4				4				4				4				4		
Opposed Ø'ing: N/S-1, E/W-2 or Both-3?				2				2				2				2				2		
Right Turns: FREE-1, NRTOR-2 or OLA-3?	NB--	0	SB--	0	NB--	0	SB--	0	NB--	0	SB--	0	NB--	0	SB--	0	NB--	0	SB--	0		
	EB--	0	WB--	2	EB--	0	WB--	2	EB--	0	WB--	2	EB--	0	WB--	2	EB--	0	WB--	2		
ATSAC-1 or ATSAC+ATCS-2?				2				2				2				2				2		
Override Capacity				0				0				0				0				0		

	MOVEMENT	EXISTING CONDITION			EXISTING PLUS PROJECT			FUTURE CONDITION W/O PROJECT				FUTURE CONDITION W/ PROJECT				FUTURE W/ PROJECT W/ MITIGATION			
		Volume	No. of Lanes	Lane Volume	Project Traffic	Total Volume	Lane Volume	Added Volume	Total Volume	No. of Lanes	Lane Volume	Added Volume	Total Volume	No. of Lanes	Lane Volume	Added Volume	Total Volume	No. of Lanes	Lane Volume
NORTHBOUND	Left	35	1	**35**	0	35	**35**	0	37	1	**37**	0	37	1	**37**	0	37	1	**37**
	Left-Through		0							0				0				0	
	Through	510	1	342	20	530	352	13	546	1	372	20	566	1	382	0	566	1	382
	Through-Right		1							1				1				1	
	Right	174	0	174	0	174	174	15	197	0	197	0	197	0	197	0	197	0	197
	Left-Through-Right		0							0				0				0	
	Left-Right		0							0				0				0	
SOUTHBOUND	Left	31	1	31	0	31	31	0	32	1	32	0	32	1	32	0	32	1	32
	Left-Through		0							0				0				0	
	Through	1135	2	**568**	20	1155	**578**	20	1207	2	**604**	20	1227	2	**614**	0	1227	2	**614**
	Through-Right		0							0				0				0	
	Right	90	1	55	0	90	55	0	94	1	58	0	94	1	58	0	94	1	58
	Left-Through-Right		0							0				0				0	
	Left-Right		0							0				0				0	
EASTBOUND	Left	70	0	70	0	70	70	0	73	0	73	0	73	0	73	0	73	0	73
	Left-Through		0							0				0				0	
	Through	137	0	**247**	0	137	**247**	23	166	0	**281**	0	166	0	**281**	0	166	0	**281**
	Through-Right		0							0				0				0	
	Right	40	0	0	0	40	0	0	42	0	0	0	42	0	0	0	42	0	0
	Left-Through-Right		1							1				1				1	
	Left-Right		0							0				0				0	
WESTBOUND	Left	196	0	196	0	196	196	13	218	0	218	0	218	0	218	0	218	0	218
	Left-Through		0							0				0				0	
	Through	137	0	**379**	0	137	**379**	19	162	0	**428**	0	162	0	**428**	0	162	0	**428**
	Through-Right		0							0				0				0	
	Right	46	0	0	0	46	0	0	48	0	0	0	48	0	0	0	48	0	0
	Left-Through-Right		1							1				1				1	
	Left-Right		0							0				0				0	
CRITICAL VOLUMES		*North-South:*		603	*North-South:*		613	*North-South:*			641	*North-South:*			651	*North-South:*			651
		East-West:		626	*East-West:*		626	*East-West:*			709	*East-West:*			709	*East-West:*			709
		SUM:		1229	*SUM:*		1239	*SUM:*			1350	*SUM:*			1360	*SUM:*			1360
VOLUME/CAPACITY *(V/C)* RATIO:				0.894			0.901				0.982				0.989				0.989
V/C LESS ATSAC/ATCS ADJUSTMENT:				**0.794**			**0.801**				**0.882**				**0.889**				**0.889**
LEVEL OF SERVICE (LOS):				**C**			**D**				**D**				**D**				**D**

REMARKS: Alt. Route 3: Using only Sheldon Pit

Version: 1i Beta; 8/4/2011

PROJECT IMPACT

Change in *v/c* due to project:	0.007	Δ*v/c* after mitigation:	0.007
Significant impacted?	NO	Fully mitigated?	N/A

Level of Service Workheet
(Circular 212 Method)

I/S #:	North-South Street:	San Fernando Road	Year of Count:	2015	Ambient Growth: (%):	1.5	Conducted by:	City Traffic Counters	Date:	4/28/2015
CMA22	East-West Street:	Pierce Street	Projection Year:	2018	Peak Hour:	Mid-Day	Reviewed by:		Project:	Pacoima Reservoir Project/1-13-4

No. of Phases				4				4				4				4				4			4
Opposed Ø'ing: N/S-1, E/W-2 or Both-3?				2				2				2				2				2			2
Right Turns: FREE-1, NRTOR-2 or OLA-3?	NB--	0	SB--	0	NB--	0	SB--	0	NB--	0	SB--	0	NB--	0	SB--	0	NB--	0	SB--	0	NB--	0	SB--	0
	EB--	0	WB--	2	EB--	0	WB--	2	EB--	0	WB--	2	EB--	0	WB--	2	EB--	0	WB--	2	EB--	0	WB--	2
ATSAC-1 or ATSAC+ATCS-2?				2				2				2				2				2				2
Override Capacity				0				0				0				0				0				0

	MOVEMENT	EXISTING CONDITION			EXISTING PLUS PROJECT			FUTURE CONDITION W/O PROJECT				FUTURE CONDITION W/ PROJECT				FUTURE W/ PROJECT W/ MITIGATION			
		Volume	No. of Lanes	Lane Volume	Project Traffic	Total Volume	Lane Volume	Added Volume	Total Volume	No. of Lanes	Lane Volume	Added Volume	Total Volume	No. of Lanes	Lane Volume	Added Volume	Total Volume	No. of Lanes	Lane Volume
NORTHBOUND	Left	24	1	24	0	24	24	0	25	1	25	0	25	1	25	0	25	1	25
	Left-Through		0							0				0				0	
	Through	506	1	**305**	20	526	**315**	10	539	1	**324**	20	559	1	**334**	0	559	1	**334**
	Through-Right		1							1				1				1	
	Right	103	0	103	0	103	103	0	108	0	108	0	108	0	108	0	108	0	108
	Left-Through-Right		0							0				0				0	
	Left-Right		0							0				0				0	
SOUTHBOUND	Left	35	1	**35**	0	35	**35**	0	37	1	**37**	0	37	1	**37**	0	37	1	**37**
	Left-Through		0							0				0				0	
	Through	549	2	275	20	569	285	7	581	2	291	20	601	2	301	0	601	2	301
	Through-Right		0							0				0				0	
	Right	88	1	59	0	88	59	0	92	1	62	0	92	1	62	0	92	1	62
	Left-Through-Right		0							0				0				0	
	Left-Right		0							0				0				0	
EASTBOUND	Left	58	0	58	0	58	58	0	61	0	61	0	61	0	61	0	61	0	61
	Left-Through		0							0				0				0	
	Through	75	0	**158**	0	75	**158**	0	78	0	**165**	0	78	0	**165**	0	78	0	**165**
	Through-Right		0							0				0				0	
	Right	25	0	0	0	25	0	0	26	0	0	0	26	0	0	0	26	0	0
	Left-Through-Right		1							1				1				1	
	Left-Right		0							0				0				0	
WESTBOUND	Left	80	0	80	0	80	80	0	84	0	84	0	84	0	84	0	84	0	84
	Left-Through		0							0				0				0	
	Through	50	0	**160**	0	50	**160**	0	52	0	**167**	0	52	0	**167**	0	52	0	**167**
	Through-Right		0							0				0				0	
	Right	30	0	0	0	30	0	0	31	0	0	0	31	0	0	0	31	0	0
	Left-Through-Right		1							1				1				1	
	Left-Right		0							0				0				0	
CRITICAL VOLUMES		*North-South:*		340	*North-South:*		350	*North-South:*			361	*North-South:*			371	*North-South:*			371
		East-West:		318	*East-West:*		318	*East-West:*			332	*East-West:*			332	*East-West:*			332
		SUM:		658	*SUM:*		668	*SUM:*			693	*SUM:*			703	*SUM:*			703
VOLUME/CAPACITY *(V/C)* RATIO:				0.479			0.486				0.504				0.511				0.511
V/C LESS ATSAC/ATCS ADJUSTMENT:				**0.379**			**0.386**				**0.404**				**0.411**				**0.411**
LEVEL OF SERVICE (LOS):				**A**			**A**				**A**				**A**				**A**

REMARKS: Alt. Route 3: Using only Sheldon Pit

Version: 1i Beta; 8/4/2011

PROJECT IMPACT

Change in *v/c* due to project:	0.007	Δ*v/c* after mitigation:	0.007
Significant impacted?	NO	Fully mitigated?	N/A

Level of Service Workheet
(Circular 212 Method)

I/S #:	North-South Street:	San Fernando Road	Year of Count:	2015	Ambient Growth: (%):	1.5	Conducted by:	City Traffic Counters	Date:	4/28/2015
CMA22	East-West Street:	Pierce Street	Projection Year:	2018	Peak Hour:	PM	Reviewed by:		Project:	Pacoima Reservoir Project/1-13-4

No. of Phases				4				4				4				4				4			4
Opposed Ø'ing: N/S-1, E/W-2 or Both-3?				2				2				2				2				2			2
Right Turns: FREE-1, NRTOR-2 or OLA-3?	NB--	0	SB--	0	NB--	0	SB--	0	NB--	0	SB--	0	NB--	0	SB--	0	NB--	0	SB--	0	NB--	0	SB--	0
	EB--	0	WB--	2	EB--	0	WB--	2	EB--	0	WB--	2	EB--	0	WB--	2	EB--	0	WB--	2	EB--	0	WB--	2
ATSAC-1 or ATSAC+ATCS-2?				2				2				2				2				2				2
Override Capacity				0				0				0				0				0				0

MOVEMENT		EXISTING CONDITION			EXISTING PLUS PROJECT			FUTURE CONDITION W/O PROJECT				FUTURE CONDITION W/ PROJECT				FUTURE W/ PROJECT W/ MITIGATION			
		Volume	No. of Lanes	Lane Volume	Project Traffic	Total Volume	Lane Volume	Added Volume	Total Volume	No. of Lanes	Lane Volume	Added Volume	Total Volume	No. of Lanes	Lane Volume	Added Volume	Total Volume	No. of Lanes	Lane Volume
NORTHBOUND	Left	45	1	45	0	45	45	0	47	1	47	0	47	1	47	0	47	1	47
	Left-Through		0							0				0				0	
	Through	772	1	**482**	20	792	**492**	15	822	1	**516**	20	842	1	**526**	0	842	1	**526**
	Through-Right		1							1				1				1	
	Right	191	0	191	0	191	191	9	209	0	209	0	209	0	209	0	209	0	209
	Left-Through-Right		0							0				0				0	
	Left-Right		0							0				0				0	
SOUTHBOUND	Left	43	1	**43**	0	43	**43**	0	45	1	**45**	0	45	1	**45**	0	45	1	**45**
	Left-Through		0							0				0				0	
	Through	658	2	329	20	678	339	10	698	2	349	20	718	2	359	0	718	2	359
	Through-Right		0							0				0				0	
	Right	100	1	67	0	100	67	0	105	1	71	0	105	1	71	0	105	1	71
	Left-Through-Right		0							0				0				0	
	Left-Right		0							0				0				0	
EASTBOUND	Left	66	0	66	0	66	66	0	69	0	69	0	69	0	69	0	69	0	69
	Left-Through		0							0				0				0	
	Through	129	0	**239**	0	129	**239**	13	148	0	**263**	0	148	0	**263**	0	148	0	**263**
	Through-Right		0							0				0				0	
	Right	44	0	0	0	44	0	0	46	0	0	0	46	0	0	0	46	0	0
	Left-Through-Right		1							1				1				1	
	Left-Right		0							0				0				0	
WESTBOUND	Left	138	0	138	0	138	138	10	154	0	154	0	154	0	154	0	154	0	154
	Left-Through		0							0				0				0	
	Through	120	0	**314**	0	120	**314**	14	139	0	**352**	0	139	0	**352**	0	139	0	**352**
	Through-Right		0							0				0				0	
	Right	56	0	0	0	56	0	0	59	0	0	0	59	0	0	0	59	0	0
	Left-Through-Right		1							1				1				1	
	Left-Right		0							0				0				0	
CRITICAL VOLUMES			*North-South:*	525		*North-South:*	535		*North-South:*	561			*North-South:*	571			*North-South:*	571	
			East-West:	553		*East-West:*	553		*East-West:*	615			*East-West:*	615			*East-West:*	615	
			SUM:	1078		*SUM:*	1088		*SUM:*	1176			*SUM:*	1186			*SUM:*	1186	
VOLUME/CAPACITY *(V/C)* RATIO:				0.784			0.791				0.855				0.863				0.863
V/C LESS ATSAC/ATCS ADJUSTMENT:				**0.684**			**0.691**				**0.755**				**0.763**				**0.763**
LEVEL OF SERVICE (LOS):				**B**			**B**				**C**				**C**				**C**

REMARKS: Alt. Route 3: Using only Sheldon Pit

Version: 1i Beta; 8/4/2011

PROJECT IMPACT

Change in *v/c* due to project:	0.008	Δ*v/c* after mitigation:	0.008
Significant impacted?	NO	Fully mitigated?	N/A

Level of Service Workheet
(Circular 212 Method)

I/S #:	North-South Street:	San Fernando Road	Year of Count:	2015	Ambient Growth: (%):	1.5	Conducted by:	City Traffic Counters	Date:	4/28/2015
CMA23	East-West Street:	Terra Bella Street	Projection Year:	2018	Peak Hour:	AM	Reviewed by:		Project:	Pacoima Reservoir Project/1-13-4

No. of Phases				2				2				2				2				2			
Opposed Ø'ing: N/S-1, E/W-2 or Both-3?				0				0				0				0				0			
Right Turns: FREE-1, NRTOR-2 or OLA-3?	NB--	0	SB--	0	NB--	0	SB--	0	NB--	0	SB--	0	NB--	0	SB--	0	NB--	0	SB--	0			
	EB--	0	WB--	0	EB--	0	WB--	0	EB--	0	WB--	0	EB--	0	WB--	0	EB--	0	WB--	0			
ATSAC-1 or ATSAC+ATCS-2?				2				2				2				2				2			
Override Capacity				0				0				0				0				0			

	MOVEMENT	EXISTING CONDITION			EXISTING PLUS PROJECT			FUTURE CONDITION W/O PROJECT				FUTURE CONDITION W/ PROJECT				FUTURE W/ PROJECT W/ MITIGATION			
		Volume	No. of Lanes	Lane Volume	Project Traffic	Total Volume	Lane Volume	Added Volume	Total Volume	No. of Lanes	Lane Volume	Added Volume	Total Volume	No. of Lanes	Lane Volume	Added Volume	Total Volume	No. of Lanes	Lane Volume
NORTHBOUND	Left	54	1	**54**	0	54	**54**	0	56	1	**56**	0	56	1	**56**	0	56	1	**56**
	Left-Through		0							0				0				0	
	Through	485	2	243	20	505	253	14	521	2	261	20	541	2	271	0	541	2	271
	Through-Right		0							0				0				0	
	Right	0	0	0	0	0	0	0	0	0	0	0	0	0	0	0	0	0	0
	Left-Through-Right		0							0				0				0	
	Left-Right		0							0				0				0	
SOUTHBOUND	Left	0	0	0	0	0	0	0	0	0	0	0	0	0	0	0	0	0	0
	Left-Through		0							0				0				0	
	Through	1224	1	**717**	20	1244	**727**	15	1295	1	**766**	20	1315	1	**776**	0	1315	1	**776**
	Through-Right		1							1				1				1	
	Right	210	0	210	0	210	210	17	237	0	237	0	237	0	237	0	237	0	237
	Left-Through-Right		0							0				0				0	
	Left-Right		0							0				0				0	
EASTBOUND	Left	239	1	**239**	0	239	**239**	15	265	1	**265**	0	265	1	**265**	0	265	1	**265**
	Left-Through		0							0				0				0	
	Through	0	0	0	0	0	0	0	0	0	0	0	0	0	0	0	0	0	0
	Through-Right		0							0				0				0	
	Right	116	1	89	0	116	89	0	121	1	93	0	121	1	93	0	121	1	93
	Left-Through-Right		0							0				0				0	
	Left-Right		0							0				0				0	
WESTBOUND	Left	0	0	0	0	0	0	0	0	0	0	0	0	0	0	0	0	0	0
	Left-Through		0							0				0				0	
	Through	0	0	**0**	0	0	**0**	0	0	0	**0**	0	0	0	**0**	0	0	0	**0**
	Through-Right		0							0				0				0	
	Right	0	0	0	0	0	0	0	0	0	0	0	0	0	0	0	0	0	0
	Left-Through-Right		0							0				0				0	
	Left-Right		0							0				0				0	
CRITICAL VOLUMES		*North-South:*		771	*North-South:*		781	*North-South:*			822	*North-South:*			832	*North-South:*			832
		East-West:		239	*East-West:*		239	*East-West:*			265	*East-West:*			265	*East-West:*			265
		SUM:		1010	*SUM:*		1020	*SUM:*			1087	*SUM:*			1097	*SUM:*			1097
VOLUME/CAPACITY *(V/C)* RATIO:				0.673			0.680				0.725				0.731				0.731
V/C LESS ATSAC/ATCS ADJUSTMENT:				**0.573**			**0.580**				**0.625**				**0.631**				**0.631**
LEVEL OF SERVICE (LOS):				**A**			**A**				**B**				**B**				**B**

REMARKS: Alt. Route 3: Using only Sheldon Pit

Version: 1i Beta; 8/4/2011

PROJECT IMPACT

Change in *v/c* due to project:	0.006	Δ*v/c* after mitigation:	0.006
Significant impacted?	NO	Fully mitigated?	N/A

Level of Service Workheet
(Circular 212 Method)

I/S #:	North-South Street:	San Fernando Road	Year of Count:	2015	Ambient Growth: (%):	1.5	Conducted by:	City Traffic Counters	Date:	4/28/2015
CMA23	East-West Street:	Terra Bella Street	Projection Year:	2018	Peak Hour:	Mid-Day	Reviewed by:		Project:	Pacoima Reservoir Project/1-13-4

No. of Phases				2				2				2				2				2			
Opposed Ø'ing: N/S-1, E/W-2 or Both-3?				0				0				0				0				0			
Right Turns: FREE-1, NRTOR-2 or OLA-3?	NB--	0	SB--	0	NB--	0	SB--	0	NB--	0	SB--	0	NB--	0	SB--	0	NB--	0	SB--	0			
	EB--	0	WB--	0	EB--	0	WB--	0	EB--	0	WB--	0	EB--	0	WB--	0	EB--	0	WB--	0			
ATSAC-1 or ATSAC+ATCS-2?				2				2				2				2				2			
Override Capacity				0				0				0				0				0			

	MOVEMENT	EXISTING CONDITION			EXISTING PLUS PROJECT			FUTURE CONDITION W/O PROJECT				FUTURE CONDITION W/ PROJECT				FUTURE W/ PROJECT W/ MITIGATION			
		Volume	No. of Lanes	Lane Volume	Project Traffic	Total Volume	Lane Volume	Added Volume	Total Volume	No. of Lanes	Lane Volume	Added Volume	Total Volume	No. of Lanes	Lane Volume	Added Volume	Total Volume	No. of Lanes	Lane Volume
NORTHBOUND	Left	64	1	**64**	0	64	**64**	0	67	1	**67**	0	67	1	**67**	0	67	1	**67**
	Left-Through		0							0				0				0	
	Through	481	2	241	20	501	251	10	513	2	257	20	533	2	267	0	533	2	267
	Through-Right		0							0				0				0	
	Right	0	0	0	0	0	0	0	0	0	0	0	0	0	0	0	0	0	0
	Left-Through-Right		0							0				0				0	
	Left-Right		0							0				0				0	
SOUTHBOUND	Left	0	0	0	0	0	0	0	0	0	0	0	0	0	0	0	0	0	0
	Left-Through		0							0				0				0	
	Through	547	1	**332**	20	567	**342**	7	579	1	**350**	20	599	1	**360**	0	599	1	**360**
	Through-Right		1							1				1				1	
	Right	116	0	116	0	116	116	0	121	0	121	0	121	0	121	0	121	0	121
	Left-Through-Right		0							0				0				0	
	Left-Right		0							0				0				0	
EASTBOUND	Left	126	1	**126**	0	126	**126**	0	132	1	**132**	0	132	1	**132**	0	132	1	**132**
	Left-Through		0							0				0				0	
	Through	0	0	0	0	0	0	0	0	0	0	0	0	0	0	0	0	0	0
	Through-Right		0							0				0				0	
	Right	74	1	42	0	74	42	0	77	1	44	0	77	1	44	0	77	1	44
	Left-Through-Right		0							0				0				0	
	Left-Right		0							0				0				0	
WESTBOUND	Left	0	0	0	0	0	0	0	0	0	0	0	0	0	0	0	0	0	0
	Left-Through		0							0				0				0	
	Through	0	0	**0**	0	0	**0**	0	0	0	**0**	0	0	0	**0**	0	0	0	**0**
	Through-Right		0							0				0				0	
	Right	0	0	0	0	0	0	0	0	0	0	0	0	0	0	0	0	0	0
	Left-Through-Right		0							0				0				0	
	Left-Right		0							0				0				0	
CRITICAL VOLUMES		*North-South:*		396	*North-South:*		406	*North-South:*			417	*North-South:*			427	*North-South:*			427
		East-West:		126	*East-West:*		126	*East-West:*			132	*East-West:*			132	*East-West:*			132
		SUM:		522	*SUM:*		532	*SUM:*			549	*SUM:*			559	*SUM:*			559
VOLUME/CAPACITY *(V/C)* RATIO:				0.348			0.355				0.366				0.373				0.373
V/C LESS ATSAC/ATCS ADJUSTMENT:				**0.248**			**0.255**				**0.266**				**0.273**				**0.273**
LEVEL OF SERVICE (LOS):				**A**			**A**				**A**				**A**				**A**

REMARKS: Alt. Route 3: Using only Sheldon Pit

Version: 1i Beta; 8/4/2011

PROJECT IMPACT

Change in *v/c* due to project:	0.007	Δ*v/c* after mitigation:	0.007
Significant impacted?	NO	Fully mitigated?	N/A

Level of Service Workheet
(Circular 212 Method)

I/S #:	North-South Street:	San Fernando Road	Year of Count:	2015	Ambient Growth: (%):	1.5	Conducted by:	City Traffic Counters	Date:	4/28/2015
CMA23	East-West Street:	Terra Bella Street	Projection Year:	2018	Peak Hour:	PM	Reviewed by:		Project:	Pacoima Reservoir Project/1-13-4

No. of Phases				2				2				2				2				2			
Opposed Ø'ing: N/S-1, E/W-2 or Both-3?				0				0				0				0				0			
Right Turns: FREE-1, NRTOR-2 or OLA-3?	NB--	0	SB--	0	NB--	0	SB--	0	NB--	0	SB--	0	NB--	0	SB--	0	NB--	0	SB--	0			
	EB--	0	WB--	0	EB--	0	WB--	0	EB--	0	WB--	0	EB--	0	WB--	0	EB--	0	WB--	0			
ATSAC-1 or ATSAC+ATCS-2?				2				2				2				2				2			
Override Capacity				0				0				0				0				0			

	MOVEMENT	EXISTING CONDITION			EXISTING PLUS PROJECT			FUTURE CONDITION W/O PROJECT				FUTURE CONDITION W/ PROJECT				FUTURE W/ PROJECT W/ MITIGATION			
		Volume	No. of Lanes	Lane Volume	Project Traffic	Total Volume	Lane Volume	Added Volume	Total Volume	No. of Lanes	Lane Volume	Added Volume	Total Volume	No. of Lanes	Lane Volume	Added Volume	Total Volume	No. of Lanes	Lane Volume
NORTHBOUND	Left	111	1	**111**	0	111	**111**	0	116	1	**116**	0	116	1	**116**	0	116	1	**116**
	Left-Through		0							0				0				0	
	Through	807	2	404	20	827	414	14	858	2	429	20	878	2	439	0	878	2	439
	Through-Right		0							0				0				0	
	Right	1	0	0	0	1	0	0	1	0	0	0	1	0	0	0	1	0	0
	Left-Through-Right		0							0				0				0	
	Left-Right		0							0				0				0	
SOUTHBOUND	Left	0	0	0	0	0	0	0	0	0	0	0	0	0	0	0	0	0	0
	Left-Through		0							0				0				0	
	Through	677	1	**429**	20	697	**439**	12	720	1	**458**	20	740	1	**468**	0	740	1	**468**
	Through-Right		1							1				1				1	
	Right	180	0	180	0	180	180	8	196	0	196	0	196	0	196	0	196	0	196
	Left-Through-Right		0							0				0				0	
	Left-Right		0							0				0				0	
EASTBOUND	Left	220	1	**220**	0	220	**220**	9	239	1	**239**	0	239	1	**239**	0	239	1	**239**
	Left-Through		0							0				0				0	
	Through	0	0	0	0	0	0	0	0	0	0	0	0	0	0	0	0	0	0
	Through-Right		0							0				0				0	
	Right	117	1	62	0	117	62	0	122	1	64	0	122	1	64	0	122	1	64
	Left-Through-Right		0							0				0				0	
	Left-Right		0							0				0				0	
WESTBOUND	Left	0	0	0	0	0	0	0	0	0	0	0	0	0	0	0	0	0	0
	Left-Through		0							0				0				0	
	Through	0	0	**0**	0	0	**0**	0	0	0	**0**	0	0	0	**0**	0	0	0	**0**
	Through-Right		0							0				0				0	
	Right	0	0	0	0	0	0	0	0	0	0	0	0	0	0	0	0	0	0
	Left-Through-Right		0							0				0				0	
	Left-Right		0							0				0				0	
CRITICAL VOLUMES			*North-South:*	540		*North-South:*	550			*North-South:*	574			*North-South:*	584			*North-South:*	584
			East-West:	220		*East-West:*	220			*East-West:*	239			*East-West:*	239			*East-West:*	239
			SUM:	760		*SUM:*	770			*SUM:*	813			*SUM:*	823			*SUM:*	823
VOLUME/CAPACITY *(V/C)* RATIO:				0.507			0.513				0.542				0.549				0.549
V/C LESS ATSAC/ATCS ADJUSTMENT:				**0.407**			**0.413**				**0.442**				**0.449**				**0.449**
LEVEL OF SERVICE (LOS):				**A**			**A**				**A**				**A**				**A**

REMARKS: Alt. Route 3: Using only Sheldon Pit

Version: 1i Beta; 8/4/2011

PROJECT IMPACT

Change in *v/c* due to project:	0.007	Δ*v/c* after mitigation:	0.007
Significant impacted?	NO	Fully mitigated?	N/A

Level of Service Workheet
(Circular 212 Method)

I/S #:	North-South Street:	San Fernando Road	Year of Count:	2015	Ambient Growth: (%):	1.5	Conducted by:	City Traffic Counters	Date:	4/28/2015
CMA24	East-West Street:	Osborne Street	Projection Year:	2018	Peak Hour:	AM	Reviewed by:		Project:	Pacoima Reservoir Project/1-13-4

No. of Phases				4				4				4				4				4		
Opposed Ø'ing: N/S-1, E/W-2 or Both-3?				2				2				2				2				2		
Right Turns: FREE-1, NRTOR-2 or OLA-3?	NB--	0	SB--	0	NB--	0	SB--	0	NB--	0	SB--	0	NB--	0	SB--	0	NB--	0	SB--	0		
	EB--	0	WB--	2	EB--	0	WB--	2	EB--	0	WB--	2	EB--	0	WB--	2	EB--	0	WB--	2		
ATSAC-1 or ATSAC+ATCS-2?				2				2				2				2				2		
Override Capacity				0				0				0				0				0		

	MOVEMENT	EXISTING CONDITION			EXISTING PLUS PROJECT			FUTURE CONDITION W/O PROJECT				FUTURE CONDITION W/ PROJECT				FUTURE W/ PROJECT W/ MITIGATION			
		Volume	No. of Lanes	Lane Volume	Project Traffic	Total Volume	Lane Volume	Added Volume	Total Volume	No. of Lanes	Lane Volume	Added Volume	Total Volume	No. of Lanes	Lane Volume	Added Volume	Total Volume	No. of Lanes	Lane Volume
NORTHBOUND	Left	28	1	**28**	0	28	**28**	0	29	1	**29**	0	29	1	**29**	0	29	1	**29**
	Left-Through		0							0				0				0	
	Through	324	1	196	20	344	206	4	343	1	207	20	363	1	217	0	363	1	217
	Through-Right		1							1				1				1	
	Right	68	0	68	0	68	68	0	71	0	71	0	71	0	71	0	71	0	71
	Left-Through-Right		0							0				0				0	
	Left-Right		0							0				0				0	
SOUTHBOUND	Left	110	1	110	0	110	110	1	116	1	116	0	116	1	116	0	116	1	116
	Left-Through		0							0				0				0	
	Through	875	1	**471**	20	895	**481**	8	923	1	**500**	20	943	1	**510**	0	943	1	**510**
	Through-Right		1							1				1				1	
	Right	67	0	67	0	67	67	6	76	0	76	0	76	0	76	0	76	0	76
	Left-Through-Right		0							0				0				0	
	Left-Right		0							0				0				0	
EASTBOUND	Left	78	1	78	0	78	78	8	90	1	90	0	90	1	90	0	90	1	90
	Left-Through		0							0				0				0	
	Through	587	1	**318**	0	587	**318**	7	621	1	**336**	0	621	1	**336**	0	621	1	**336**
	Through-Right		1							1				1				1	
	Right	48	0	48	0	48	48	0	50	0	50	0	50	0	50	0	50	0	50
	Left-Through-Right		0							0				0				0	
	Left-Right		0							0				0				0	
WESTBOUND	Left	82	1	82	0	82	82	0	86	1	86	0	86	1	86	0	86	1	86
	Left-Through		0							0				0				0	
	Through	764	1	**431**	0	764	**431**	11	810	1	**457**	0	810	1	**457**	0	810	1	**457**
	Through-Right		1							1				1				1	
	Right	98	0	98	0	98	98	2	104	0	104	0	104	0	104	0	104	0	104
	Left-Through-Right		0							0				0				0	
	Left-Right		0							0				0				0	
CRITICAL VOLUMES			*North-South:*	499		*North-South:*	509			*North-South:*	529			*North-South:*	539			*North-South:*	539
			East-West:	749		*East-West:*	749			*East-West:*	793			*East-West:*	793			*East-West:*	793
			SUM:	1248		*SUM:*	1258			*SUM:*	1322			*SUM:*	1332			*SUM:*	1332
VOLUME/CAPACITY *(V/C)* RATIO:				0.908			0.915				0.961				0.969				0.969
V/C LESS ATSAC/ATCS ADJUSTMENT:				**0.808**			**0.815**				**0.861**				**0.869**				**0.869**
LEVEL OF SERVICE (LOS):				**D**			**D**				**D**				**D**				**D**

REMARKS: Alt. Route 3: Using only Sheldon Pit

Version: 1i Beta; 8/4/2011

PROJECT IMPACT

Change in *v/c* due to project:	0.008	Δ*v/c* after mitigation:	0.008
Significant impacted?	NO	Fully mitigated?	N/A

Level of Service Workheet
(Circular 212 Method)

I/S #:	North-South Street:	San Fernando Road	Year of Count:	2015	Ambient Growth: (%):	1.5	Conducted by:	City Traffic Counters	Date:	4/28/2015
CMA24	East-West Street:	Osborne Street	Projection Year:	2018	Peak Hour:	Mid-Day	Reviewed by:		Project:	Pacoima Reservoir Project/1-13-4

No. of Phases				4				4				4				4				4			4
Opposed Ø'ing: N/S-1, E/W-2 or Both-3?				2				2				2				2				2			2
Right Turns: FREE-1, NRTOR-2 or OLA-3?	NB--	0	SB--	0	NB--	0	SB--	0	NB--	0	SB--	0	NB--	0	SB--	0	NB--	0	SB--	0	NB--	0	SB--	0
	EB--	0	WB--	2	EB--	0	WB--	2	EB--	0	WB--	2	EB--	0	WB--	2	EB--	0	WB--	2	EB--	0	WB--	2
ATSAC-1 or ATSAC+ATCS-2?				2				2				2				2				2				2
Override Capacity				0				0				0				0				0				0

MOVEMENT		EXISTING CONDITION			EXISTING PLUS PROJECT			FUTURE CONDITION W/O PROJECT				FUTURE CONDITION W/ PROJECT				FUTURE W/ PROJECT W/ MITIGATION			
		Volume	No. of Lanes	Lane Volume	Project Traffic	Total Volume	Lane Volume	Added Volume	Total Volume	No. of Lanes	Lane Volume	Added Volume	Total Volume	No. of Lanes	Lane Volume	Added Volume	Total Volume	No. of Lanes	Lane Volume
NORTHBOUND	Left	58	1	58	0	58	58	0	61	1	61	0	61	1	61	0	61	1	61
	Left-Through		0							0				0				0	
	Through	337	1	**190**	20	357	**200**	8	360	1	**202**	20	380	1	**212**	0	380	1	**212**
	Through-Right		1							1				1				1	
	Right	42	0	42	0	42	42	0	44	0	44	0	44	0	44	0	44	0	44
	Left-Through-Right		0							0				0				0	
	Left-Right		0							0				0				0	
SOUTHBOUND	Left	167	1	**167**	0	167	**167**	1	176	1	**176**	0	176	1	**176**	0	176	1	**176**
	Left-Through		0							0				0				0	
	Through	448	1	255	20	468	265	6	474	1	269	20	494	1	279	0	494	1	279
	Through-Right		1							1				1				1	
	Right	61	0	61	0	61	61	0	64	0	64	0	64	0	64	0	64	0	64
	Left-Through-Right		0							0				0				0	
	Left-Right		0							0				0				0	
EASTBOUND	Left	75	1	75	0	75	75	0	78	1	78	0	78	1	78	0	78	1	78
	Left-Through		0							0				0				0	
	Through	547	1	**296**	0	547	**296**	0	572	1	**310**	0	572	1	**310**	0	572	1	**310**
	Through-Right		1							1				1				1	
	Right	45	0	45	0	45	45	0	47	0	47	0	47	0	47	0	47	0	47
	Left-Through-Right		0							0				0				0	
	Left-Right		0							0				0				0	
WESTBOUND	Left	45	1	45	0	45	45	0	47	1	47	0	47	1	47	0	47	1	47
	Left-Through		0							0				0				0	
	Through	521	1	**318**	0	521	**318**	0	545	1	**333**	0	545	1	**333**	0	545	1	**333**
	Through-Right		1							1				1				1	
	Right	114	0	114	0	114	114	1	120	0	120	0	120	0	120	0	120	0	120
	Left-Through-Right		0							0				0				0	
	Left-Right		0							0				0				0	
CRITICAL VOLUMES		North-South:		357	North-South:		367	North-South:			378	North-South:			388	North-South:			388
		East-West:		614	East-West:		614	East-West:			643	East-West:			643	East-West:			643
		SUM:		971	SUM:		981	SUM:			1021	SUM:			1031	SUM:			1031
VOLUME/CAPACITY (V/C) RATIO:				0.706			0.713				0.743				0.750				0.750
V/C LESS ATSAC/ATCS ADJUSTMENT:				**0.606**			**0.613**				**0.643**				**0.650**				**0.650**
LEVEL OF SERVICE (LOS):				**B**			**B**				**B**				**B**				**B**

REMARKS: Alt. Route 3: Using only Sheldon Pit

Version: 1i Beta; 8/4/2011

PROJECT IMPACT

Change in *v/c* due to project:	0.007	Δ*v/c* after mitigation:	0.007
Significant impacted?	NO	Fully mitigated?	N/A

Level of Service Workheet
(Circular 212 Method)

I/S #:	North-South Street:	San Fernando Road	Year of Count:	2015	Ambient Growth: (%):	1.5	Conducted by:	City Traffic Counters	Date:	4/28/2015
CMA24	East-West Street:	Osborne Street	Projection Year:	2018	Peak Hour:	PM	Reviewed by:		Project:	Pacoima Reservoir Project/1-13-4

No. of Phases				4				4				4				4				4		
Opposed Ø'ing: N/S-1, E/W-2 or Both-3?				2				2				2				2				2		
Right Turns: FREE-1, NRTOR-2 or OLA-3?	NB--	0	SB--	0	NB--	0	SB--	0	NB--	0	SB--	0	NB--	0	SB--	0	NB--	0	SB--	0		
	EB--	0	WB--	2	EB--	0	WB--	2	EB--	0	WB--	2	EB--	0	WB--	2	EB--	0	WB--	2		
ATSAC-1 or ATSAC+ATCS-2?				2				2				2				2				2		
Override Capacity				0				0				0				0				0		

	MOVEMENT	EXISTING CONDITION			EXISTING PLUS PROJECT			FUTURE CONDITION W/O PROJECT				FUTURE CONDITION W/ PROJECT				FUTURE W/ PROJECT W/ MITIGATION			
		Volume	No. of Lanes	Lane Volume	Project Traffic	Total Volume	Lane Volume	Added Volume	Total Volume	No. of Lanes	Lane Volume	Added Volume	Total Volume	No. of Lanes	Lane Volume	Added Volume	Total Volume	No. of Lanes	Lane Volume
NORTHBOUND	Left	74	1	74	0	74	74	0	77	1	77	0	77	1	77	0	77	1	77
	Left-Through		0							0				0				0	
	Through	546	1	**313**	20	566	**323**	8	579	1	**331**	20	599	1	**341**	0	599	1	**341**
	Through-Right		1							1				1				1	
	Right	79	0	79	0	79	79	0	83	0	83	0	83	0	83	0	83	0	83
	Left-Through-Right		0							0				0				0	
	Left-Right		0							0				0				0	
SOUTHBOUND	Left	179	1	**179**	0	179	**179**	1	188	1	**188**	0	188	1	**188**	0	188	1	**188**
	Left-Through		0							0				0				0	
	Through	457	1	261	20	477	271	6	484	1	278	20	504	1	288	0	504	1	288
	Through-Right		1							1				1				1	
	Right	64	0	64	0	64	64	5	72	0	72	0	72	0	72	0	72	0	72
	Left-Through-Right		0							0				0				0	
	Left-Right		0							0				0				0	
EASTBOUND	Left	101	1	101	0	101	101	4	110	1	110	0	110	1	110	0	110	1	110
	Left-Through		0							0				0				0	
	Through	652	1	**348**	0	652	**348**	5	687	1	**367**	0	687	1	**367**	0	687	1	**367**
	Through-Right		1							1				1				1	
	Right	44	0	44	0	44	44	0	46	0	46	0	46	0	46	0	46	0	46
	Left-Through-Right		0							0				0				0	
	Left-Right		0							0				0				0	
WESTBOUND	Left	54	1	54	0	54	54	0	56	1	56	0	56	1	56	0	56	1	56
	Left-Through		0							0				0				0	
	Through	698	1	**418**	0	698	**418**	3	733	1	**439**	0	733	1	**439**	0	733	1	**439**
	Through-Right		1							1				1				1	
	Right	137	0	137	0	137	137	1	144	0	144	0	144	0	144	0	144	0	144
	Left-Through-Right		0							0				0				0	
	Left-Right		0							0				0				0	
CRITICAL VOLUMES		*North-South:*		492	*North-South:*		502	*North-South:*			519	*North-South:*			529	*North-South:*			529
		East-West:		766	*East-West:*		766	*East-West:*			806	*East-West:*			806	*East-West:*			806
		SUM:		1258	*SUM:*		1268	*SUM:*			1325	*SUM:*			1335	*SUM:*			1335
VOLUME/CAPACITY *(V/C)* RATIO:				0.915			0.922				0.964				0.971				0.971
V/C LESS ATSAC/ATCS ADJUSTMENT:				**0.815**			**0.822**				**0.864**				**0.871**				**0.871**
LEVEL OF SERVICE (LOS):				**D**			**D**				**D**				**D**				**D**

REMARKS: Alt. Route 3: Using only Sheldon Pit

Version: 1i Beta; 8/4/2011

PROJECT IMPACT

Change in *v/c* due to project:	0.007	Δ*v/c* after mitigation:	0.007
Significant impacted?	NO	Fully mitigated?	N/A

Level of Service Workheet
(Circular 212 Method)

I/S #:	North-South Street:	Arleta Avenue	Year of Count:	2015	Ambient Growth: (%):	1.5	Conducted by:	City Traffic Counters	Date:	4/28/2015
CMA1	East-West Street:	Devonshire Street	Projection Year:	2018	Peak Hour:	AM	Reviewed by:		Project:	Pacoima Reservoir Project/1-13-4

No. of Phases			3				3				3				3				3
Opposed Ø'ing: N/S-1, E/W-2 or Both-3?			0				0				0				0				0
Right Turns: FREE-1, NRTOR-2 or OLA-3?	NB-- 0	SB--	3	NB-- 0	SB--	3	NB-- 0	SB--	3	NB-- 0	SB--	3	NB-- 0	SB--	3	NB-- 0	SB--	3
	EB-- 0	WB--	0	EB-- 0	WB--	0	EB-- 0	WB--	0	EB-- 0	WB--	0	EB-- 0	WB--	0	EB-- 0	WB--	0
ATSAC-1 or ATSAC+ATCS-2?			2			2			2			2			2			2
Override Capacity			0			0			0			0			0			0

	MOVEMENT	EXISTING CONDITION			EXISTING PLUS PROJECT			FUTURE CONDITION W/O PROJECT				FUTURE CONDITION W/ PROJECT				FUTURE W/ PROJECT W/ MITIGATION			
		Volume	No. of Lanes	Lane Volume	Project Traffic	Total Volume	Lane Volume	Added Volume	Total Volume	No. of Lanes	Lane Volume	Added Volume	Total Volume	No. of Lanes	Lane Volume	Added Volume	Total Volume	No. of Lanes	Lane Volume
NORTHBOUND	Left	0	0	0	0	0	0	0	0	0	0	0	0	0	0	0	0	0	0
	Left-Through		0							0				0				0	
	Through	0	0	**0**	0	0	**0**	0	0	0	**0**	0	0	0	**0**	0	0	0	**0**
	Through-Right		0							0				0				0	
	Right	0	0	0	0	0	0	0	0	0	0	0	0	0	0	0	0	0	0
	Left-Through-Right		0							0				0				0	
	Left-Right		0							0				0				0	
SOUTHBOUND	Left	557	1	**318**	0	557	**335**	0	582	1	**333**	0	582	1	**349**	0	582	1	**349**
	Left-Through		0							0				0				0	
	Through	0	0	0	0	0	0	0	0	0	0	0	0	0	0	0	0	0	0
	Through-Right		0							0				0				0	
	Right	398	1	0	50	448	0	0	416	1	0	50	466	1	0	0	466	1	0
	Left-Through-Right		0							0				0				0	
	Left-Right		1							1				1				1	
EASTBOUND	Left	331	1	**331**	50	381	**381**	0	346	1	**346**	50	396	1	**396**	0	396	1	**396**
	Left-Through		0							0				0				0	
	Through	994	2	497	1	995	498	6	1045	2	523	1	1046	2	523	0	1046	2	523
	Through-Right		0							0				0				0	
	Right	0	0	0	0	0	0	0	0	0	0	0	0	0	0	0	0	0	0
	Left-Through-Right		0							0				0				0	
	Left-Right		0							0				0				0	
WESTBOUND	Left	0	0	0	0	0	0	0	0	0	0	0	0	0	0	0	0	0	0
	Left-Through		0							0				0				0	
	Through	592	2	**296**	1	593	**297**	6	625	2	**313**	1	626	2	**313**	0	626	2	**313**
	Through-Right		0							0				0				0	
	Right	260	1	101	0	260	93	0	272	1	106	0	272	1	98	0	272	1	98
	Left-Through-Right		0							0				0				0	
	Left-Right		0							0				0				0	
CRITICAL VOLUMES		*North-South:*		318	*North-South:*		335	*North-South:*			333	*North-South:*			349	*North-South:*			349
		East-West:		627	*East-West:*		678	*East-West:*			659	*East-West:*			709	*East-West:*			709
		SUM:		945	*SUM:*		1013	*SUM:*			992	*SUM:*			1058	*SUM:*			1058
VOLUME/CAPACITY *(V/C)* RATIO:				0.663			0.711				0.696				0.742				0.742
V/C LESS ATSAC/ATCS ADJUSTMENT:				**0.563**			**0.611**				**0.596**				**0.642**				**0.642**
LEVEL OF SERVICE (LOS):				**A**			**B**				**A**				**B**				**B**

REMARKS: Alt. Route 4: Using only Cal-Mat Pit

Version: 1i Beta; 8/4/2011

PROJECT IMPACT

Change in *v/c* due to project:	0.046	Δ*v/c* after mitigation:	0.046
Significant impacted?	NO	Fully mitigated?	N/A

Level of Service Workheet
(Circular 212 Method)

I/S #:	North-South Street:	Arleta Avenue	Year of Count:	2015	Ambient Growth: (%):	1.5	Conducted by:	City Traffic Counters	Date:	4/28/2015
CMA1	East-West Street:	Devonshire Street	Projection Year:	2018	Peak Hour:	Mid-Day	Reviewed by:		Project:	Pacoima Reservoir Project/1-13-4

No. of Phases				3				3				3				3				3	
Opposed Ø'ing: N/S-1, E/W-2 or Both-3?				0				0				0				0				0	
Right Turns: FREE-1, NRTOR-2 or OLA-3?	NB--	0	SB--	3	NB--	0	SB--	3	NB--	0	SB--	3	NB--	0	SB--	3	NB--	0	SB--	3	
	EB--	0	WB--	0	EB--	0	WB--	0	EB--	0	WB--	0	EB--	0	WB--	0	EB--	0	WB--	0	
ATSAC-1 or ATSAC+ATCS-2?				2				2				2				2				2	
Override Capacity				0				0				0				0				0	

MOVEMENT		EXISTING CONDITION			EXISTING PLUS PROJECT			FUTURE CONDITION W/O PROJECT				FUTURE CONDITION W/ PROJECT				FUTURE W/ PROJECT W/ MITIGATION			
		Volume	No. of Lanes	Lane Volume	Project Traffic	Total Volume	Lane Volume	Added Volume	Total Volume	No. of Lanes	Lane Volume	Added Volume	Total Volume	No. of Lanes	Lane Volume	Added Volume	Total Volume	No. of Lanes	Lane Volume
NORTHBOUND	Left	0	0	0	0	0	0	0	0	0	0	0	0	0	0	0	0	0	0
	Left-Through		0							0				0				0	
	Through	0	0	**0**	0	0	**0**	0	0	0	**0**	0	0	0	**0**	0	0	0	**0**
	Through-Right		0							0				0				0	
	Right	0	0	0	0	0	0	0	0	0	0	0	0	0	0	0	0	0	0
	Left-Through-Right		0							0				0				0	
	Left-Right		0							0				0				0	
SOUTHBOUND	Left	98	1	**98**	0	98	**98**	0	102	1	**102**	0	102	1	**102**	0	102	1	**102**
	Left-Through		0							0				0				0	
	Through	0	0	0	0	0	0	0	0	0	0	0	0	0	0	0	0	0	0
	Through-Right		0							0				0				0	
	Right	220	1	0	50	270	0	0	230	1	0	50	280	1	0	0	280	1	0
	Left-Through-Right		0							0				0				0	
	Left-Right		1							1				1				1	
EASTBOUND	Left	224	1	**224**	50	274	**274**	0	234	1	**234**	50	284	1	**284**	0	284	1	**284**
	Left-Through		0							0				0				0	
	Through	293	2	147	1	294	147	3	309	2	155	1	310	2	155	0	310	2	155
	Through-Right		0							0				0				0	
	Right	2	0	0	0	2	0	0	2	0	0	0	2	0	0	0	2	0	0
	Left-Through-Right		0							0				0				0	
	Left-Right		0							0				0				0	
WESTBOUND	Left	0	0	0	0	0	0	0	0	0	0	0	0	0	0	0	0	0	0
	Left-Through		0							0				0				0	
	Through	302	2	**151**	1	303	**152**	3	319	2	**160**	1	320	2	**160**	0	320	2	**160**
	Through-Right		0							0				0				0	
	Right	142	1	93	0	142	93	0	148	1	97	0	148	1	97	0	148	1	97
	Left-Through-Right		0							0				0				0	
	Left-Right		0							0				0				0	
CRITICAL VOLUMES			*North-South:*	98		*North-South:*	98			*North-South:*	102			*North-South:*	102			*North-South:*	102
			East-West:	375		*East-West:*	426			*East-West:*	394			*East-West:*	444			*East-West:*	444
			SUM:	473		*SUM:*	524			*SUM:*	496			*SUM:*	546			*SUM:*	546
VOLUME/CAPACITY *(V/C)* RATIO:				0.332			0.368				0.348				0.383				0.383
V/C LESS ATSAC/ATCS ADJUSTMENT:				**0.232**			**0.268**				**0.248**				**0.283**				**0.283**
LEVEL OF SERVICE (LOS):				**A**			**A**				**A**				**A**				**A**

REMARKS: Alt. Route 4: Using only Cal-Mat Pit

Version: 1i Beta; 8/4/2011

PROJECT IMPACT

Change in *v/c* due to project:	0.035	Δ*v/c* after mitigation:	0.035
Significant impacted?	NO	Fully mitigated?	N/A

Level of Service Workheet
(Circular 212 Method)

I/S #:	North-South Street:	Arleta Avenue	Year of Count:	2015	Ambient Growth: (%):	1.5	Conducted by:	City Traffic Counters	Date:	4/28/2015
CMA1	East-West Street:	Devonshire Street	Projection Year:	2018	Peak Hour:	PM	Reviewed by:		Project:	Pacoima Reservoir Project/1-13-4

No. of Phases				3				3				3				3				3	
Opposed Ø'ing: N/S-1, E/W-2 or Both-3?				0				0				0				0				0	
Right Turns: FREE-1, NRTOR-2 or OLA-3?	NB--	0	SB--	3	NB--	0	SB--	3	NB--	0	SB--	3	NB--	0	SB--	3	NB--	0	SB--	3	
	EB--	0	WB--	0	EB--	0	WB--	0	EB--	0	WB--	0	EB--	0	WB--	0	EB--	0	WB--	0	
ATSAC-1 or ATSAC+ATCS-2?				2				2				2				2				2	
Override Capacity				0				0				0				0				0	

MOVEMENT		EXISTING CONDITION			EXISTING PLUS PROJECT			FUTURE CONDITION W/O PROJECT				FUTURE CONDITION W/ PROJECT				FUTURE W/ PROJECT W/ MITIGATION			
		Volume	No. of Lanes	Lane Volume	Project Traffic	Total Volume	Lane Volume	Added Volume	Total Volume	No. of Lanes	Lane Volume	Added Volume	Total Volume	No. of Lanes	Lane Volume	Added Volume	Total Volume	No. of Lanes	Lane Volume
NORTHBOUND	Left	0	0	0	0	0	0	0	0	0	0	0	0	0	0	0	0	0	0
	Left-Through		0							0				0				0	
	Through	0	0	**0**	0	0	**0**	0	0	0	**0**	0	0	0	**0**	0	0	0	**0**
	Through-Right		0							0				0				0	
	Right	0	0	0	0	0	0	0	0	0	0	0	0	0	0	0	0	0	0
	Left-Through-Right		0							0				0				0	
	Left-Right		0							0				0				0	
SOUTHBOUND	Left	216	1	**162**	0	216	**179**	0	226	1	**170**	0	226	1	**186**	0	226	1	**186**
	Left-Through		0							0				0				0	
	Through	0	0	0	0	0	0	0	0	0	0	0	0	0	0	0	0	0	0
	Through-Right		0							0				0				0	
	Right	271	1	0	50	321	0	0	283	1	0	50	333	1	0	0	333	1	0
	Left-Through-Right		0							0				0				0	
	Left-Right		1							1				1				1	
EASTBOUND	Left	420	1	**420**	50	470	**470**	0	439	1	**439**	50	489	1	**489**	0	489	1	**489**
	Left-Through		0							0				0				0	
	Through	498	2	249	1	499	250	4	525	2	263	1	526	2	263	0	526	2	263
	Through-Right		0							0				0				0	
	Right	0	0	0	0	0	0	0	0	0	0	0	0	0	0	0	0	0	0
	Left-Through-Right		0							0				0				0	
	Left-Right		0							0				0				0	
WESTBOUND	Left	0	0	0	0	0	0	0	0	0	0	0	0	0	0	0	0	0	0
	Left-Through		0							0				0				0	
	Through	436	2	218	1	437	219	5	461	2	231	1	462	2	231	0	462	2	231
	Through-Right		0							0				0				0	
	Right	350	1	**269**	0	350	**261**	0	366	1	**281**	0	366	1	**273**	0	366	1	**273**
	Left-Through-Right		0							0				0				0	
	Left-Right		0							0				0				0	
CRITICAL VOLUMES		*North-South:*		162	*North-South:*		179	*North-South:*			170	*North-South:*			186	*North-South:*			186
		East-West:		689	*East-West:*		731	*East-West:*			720	*East-West:*			762	*East-West:*			762
		SUM:		851	*SUM:*		910	*SUM:*			890	*SUM:*			948	*SUM:*			948
VOLUME/CAPACITY *(V/C)* RATIO:				0.597			0.639				0.625				0.665				0.665
V/C LESS ATSAC/ATCS ADJUSTMENT:				**0.497**			**0.539**				**0.525**				**0.565**				**0.565**
LEVEL OF SERVICE (LOS):				**A**			**A**				**A**				**A**				**A**

REMARKS: Alt. Route 4: Using only Cal-Mat Pit

Version: 1i Beta; 8/4/2011

PROJECT IMPACT

Change in *v/c* due to project:	0.040	Δ*v/c* after mitigation:	0.040
Significant impacted?	NO	Fully mitigated?	N/A

Level of Service Workheet
(Circular 212 Method)

I/S #:	North-South Street:	Arleta Avenue	Year of Count:	2015	Ambient Growth: (%):	1.5	Conducted by:	City Traffic Counters	Date:	8/13/2015
CMA2	East-West Street:	Paxton Street	Projection Year:	2018	Peak Hour:	AM	Reviewed by:		Project:	Pacoima Reservoir Project/1-13-4

No. of Phases				0				0				0				0				0	
Opposed Ø'ing: N/S-1, E/W-2 or Both-3?				0				0				0				0				0	
Right Turns: FREE-1, NRTOR-2 or OLA-3?	NB--	0	SB--	0	NB--	0	SB--	0	NB--	0	SB--	0	NB--	0	SB--	0	NB--	0	SB--	0	
	EB--	0	WB--	0	EB--	0	WB--	0	EB--	0	WB--	0	EB--	0	WB--	0	EB--	0	WB--	0	
ATSAC-1 or ATSAC+ATCS-2?				0				0				0				0				0	
Override Capacity				1425				1425				1425				1425				1425	

	MOVEMENT	EXISTING CONDITION			EXISTING PLUS PROJECT			FUTURE CONDITION W/O PROJECT				FUTURE CONDITION W/ PROJECT				FUTURE W/ PROJECT W/ MITIGATION			
		Volume	No. of Lanes	Lane Volume	Project Traffic	Total Volume	Lane Volume	Added Volume	Total Volume	No. of Lanes	Lane Volume	Added Volume	Total Volume	No. of Lanes	Lane Volume	Added Volume	Total Volume	No. of Lanes	Lane Volume
NORTHBOUND	Left	0	0	0	0	0	0	0	0	0	0	0	0	0	0	0	0	0	0
	Left-Through		0							0				0				0	
	Through	86	1	86	0	86	86	0	90	1	90	0	90	1	90	0	90	1	90
	Through-Right		1							1				1				1	
	Right	516	0	**332**	50	566	**368**	0	540	0	**347**	50	590	0	**383**	0	590	0	**383**
	Left-Through-Right		0							0				0				0	
	Left-Right		0							0				0				0	
SOUTHBOUND	Left	177	1	**177**	0	177	**177**	2	187	1	**187**	0	187	1	**187**	0	187	1	**187**
	Left-Through		0							0				0				0	
	Through	231	2	116	0	231	116	0	242	2	121	0	242	2	121	0	242	2	121
	Through-Right		0							0				0				0	
	Right	0	0	0	0	0	0	0	0	0	0	0	0	0	0	0	0	0	0
	Left-Through-Right		0							0				0				0	
	Left-Right		0							0				0				0	
EASTBOUND	Left	0	0	0	0	0	0	0	0	0	0	0	0	0	0	0	0	0	0
	Left-Through		0							0				0				0	
	Through	0	0	**0**	0	0	**0**	0	0	0	**0**	0	0	0	**0**	0	0	0	**0**
	Through-Right		0							0				0				0	
	Right	0	0	0	0	0	0	0	0	0	0	0	0	0	0	0	0	0	0
	Left-Through-Right		0							0				0				0	
	Left-Right		0							0				0				0	
WESTBOUND	Left	671	2	**369**	50	721	**397**	0	702	2	**386**	50	752	2	**414**	0	752	2	**414**
	Left-Through		0							0				0				0	
	Through	0	0	0	0	0	0	0	0	0	0	0	0	0	0	0	0	0	0
	Through-Right		0							0				0				0	
	Right	82	1	0	0	82	0	3	89	1	0	0	89	1	0	0	89	1	0
	Left-Through-Right		0							0				0				0	
	Left-Right		0							0				0				0	
CRITICAL VOLUMES			*North-South:*	509		*North-South:*	545		*North-South:*	534			*North-South:*	570			*North-South:*	570	
			East-West:	369		*East-West:*	397		*East-West:*	386			*East-West:*	414			*East-West:*	414	
			SUM:	878		*SUM:*	942		*SUM:*	920			*SUM:*	984			*SUM:*	984	
VOLUME/CAPACITY *(V/C)* RATIO:				0.616			0.661			0.646				0.691				0.691	
V/C LESS ATSAC/ATCS ADJUSTMENT:				0.616			0.661			0.646				0.691				0.691	
LEVEL OF SERVICE (LOS):				**B**			**B**			**B**				**B**				**B**	

REMARKS: Alt. Route 4: Using only Cal-Mat Pit. Based on field observations, over 1,750 vehicles currently traverse through the intersection during the peak hour. Fewer turning movements occur at the intersection due to the "T" intersection configuration. In addition, two primary movements which are complementary (i.e., NBRT/WBLT) occur during peak hours and are non-conflicting moves. A capacity of 1,425 vph is therefore utilized.

Version: 1i Beta; 8/4/2011

PROJECT IMPACT

Change in *v/c* due to project:	0.045	**Δ*v/c* after mitigation:**	0.045
Significant impacted?	NO	**Fully mitigated?**	N/A

Level of Service Workheet
(Circular 212 Method)

I/S #:	North-South Street:	Arleta Avenue	Year of Count:	2015	Ambient Growth: (%):	1.5	Conducted by:	City Traffic Counters	Date:	8/13/2015
CMA2	East-West Street:	Paxton Street	Projection Year:	2018	Peak Hour:	Mid-Day	Reviewed by:		Project:	Pacoima Reservoir Project/1-13-4

No. of Phases				0				0				0				0				0	
Opposed Ø'ing: N/S-1, E/W-2 or Both-3?				0				0				0				0				0	
Right Turns: FREE-1, NRTOR-2 or OLA-3?	NB--	0	SB--	0	NB--	0	SB--	0	NB--	0	SB--	0	NB--	0	SB--	0	NB--	0	SB--	0	
	EB--	0	WB--	0	EB--	0	WB--	0	EB--	0	WB--	0	EB--	0	WB--	0	EB--	0	WB--	0	
ATSAC-1 or ATSAC+ATCS-2?				0				0				0				0				0	
Override Capacity				1425				1425				1425				1425				1425	

MOVEMENT		EXISTING CONDITION			EXISTING PLUS PROJECT			FUTURE CONDITION W/O PROJECT				FUTURE CONDITION W/ PROJECT				FUTURE W/ PROJECT W/ MITIGATION			
		Volume	No. of Lanes	Lane Volume	Project Traffic	Total Volume	Lane Volume	Added Volume	Total Volume	No. of Lanes	Lane Volume	Added Volume	Total Volume	No. of Lanes	Lane Volume	Added Volume	Total Volume	No. of Lanes	Lane Volume
NORTHBOUND	Left	0	0	0	0	0	0	0	0	0	0	0	0	0	0	0	0	0	0
	Left-Through		0							0				0				0	
	Through	50	1	50	0	50	50	0	52	1	52	0	52	1	52	0	52	1	52
	Through-Right		1							1				1				1	
	Right	309	0	**235**	50	359	**271**	0	323	0	**245**	50	373	0	**282**	0	373	0	**282**
	Left-Through-Right		0							0				0				0	
	Left-Right		0							0				0				0	
SOUTHBOUND	Left	82	1	**82**	0	82	**82**	3	89	1	**89**	0	89	1	**89**	0	89	1	**89**
	Left-Through		0							0				0				0	
	Through	44	2	22	0	44	22	0	46	2	23	0	46	2	23	0	46	2	23
	Through-Right		0							0				0				0	
	Right	0	0	0	0	0	0	0	0	0	0	0	0	0	0	0	0	0	0
	Left-Through-Right		0							0				0				0	
	Left-Right		0							0				0				0	
EASTBOUND	Left	0	0	0	0	0	0	0	0	0	0	0	0	0	0	0	0	0	0
	Left-Through		0							0				0				0	
	Through	0	0	**0**	0	0	**0**	0	0	0	**0**	0	0	0	**0**	0	0	0	**0**
	Through-Right		0							0				0				0	
	Right	0	0	0	0	0	0	0	0	0	0	0	0	0	0	0	0	0	0
	Left-Through-Right		0							0				0				0	
	Left-Right		0							0				0				0	
WESTBOUND	Left	271	2	**149**	50	321	**177**	0	283	2	**156**	50	333	2	**183**	0	333	2	**183**
	Left-Through		0							0				0				0	
	Through	0	0	0	0	0	0	0	0	0	0	0	0	0	0	0	0	0	0
	Through-Right		0							0				0				0	
	Right	108	1	67	0	108	67	3	116	1	72	0	116	1	72	0	116	1	72
	Left-Through-Right		0							0				0				0	
	Left-Right		0							0				0				0	
CRITICAL VOLUMES		*North-South:*		317	*North-South:*		353	*North-South:*			334	*North-South:*			371	*North-South:*			371
		East-West:		149	*East-West:*		177	*East-West:*			156	*East-West:*			183	*East-West:*			183
		SUM:		466	*SUM:*		530	*SUM:*			490	*SUM:*			554	*SUM:*			554
VOLUME/CAPACITY *(V/C)* RATIO:				0.327			0.372				0.344				0.389				0.389
V/C LESS ATSAC/ATCS ADJUSTMENT:				0.327			0.372				0.344				0.389				0.389
LEVEL OF SERVICE (LOS):				A			A				A				A				A

REMARKS: Alt. Route 4: Using only Cal-Mat Pit. Based on field observations, over 1,750 vehicles currently traverse through the intersection during the peak hour. Fewer turning movements occur at the intersection due to the "T" intersection configuration. In addition, two primary movements which are complementary (i.e., NBRT/WBLT) occur during peak hours and are non-conflicting moves. A capacity of 1,425 vph is therefore utilized.

Version: 1i Beta; 8/4/2011

PROJECT IMPACT

Change in *v/c* due to project:	0.045	Δ*v/c* after mitigation:	0.045
Significant impacted?	NO	Fully mitigated?	N/A

Level of Service Workheet
(Circular 212 Method)

I/S #:	North-South Street:	Arleta Avenue	Year of Count:	2015	Ambient Growth: (%):	1.5	Conducted by:	City Traffic Counters	Date:	8/13/2015
CMA2	East-West Street:	Paxton Street	Projection Year:	2018	Peak Hour:	PM	Reviewed by:		Project:	Pacoima Reservoir Project/1-13-4

No. of Phases				0				0				0				0				0	
Opposed Ø'ing: N/S-1, E/W-2 or Both-3?				0				0				0				0				0	
Right Turns: FREE-1, NRTOR-2 or OLA-3?	NB--	0	SB--	0	NB--	0	SB--	0	NB--	0	SB--	0	NB--	0	SB--	0	NB--	0	SB--	0	
	EB--	0	WB--	0	EB--	0	WB--	0	EB--	0	WB--	0	EB--	0	WB--	0	EB--	0	WB--	0	
ATSAC-1 or ATSAC+ATCS-2?				0				0				0				0				0	
Override Capacity				1425				1425				1425				1425				1425	

	MOVEMENT	EXISTING CONDITION			EXISTING PLUS PROJECT			FUTURE CONDITION W/O PROJECT				FUTURE CONDITION W/ PROJECT				FUTURE W/ PROJECT W/ MITIGATION			
		Volume	No. of Lanes	Lane Volume	Project Traffic	Total Volume	Lane Volume	Added Volume	Total Volume	No. of Lanes	Lane Volume	Added Volume	Total Volume	No. of Lanes	Lane Volume	Added Volume	Total Volume	No. of Lanes	Lane Volume
NORTHBOUND	Left	0	0	0	0	0	0	0	0	0	0	0	0	0	0	0	0	0	0
	Left-Through		0							0				0				0	
	Through	132	1	132	0	132	132	0	138	1	138	0	138	1	138	0	138	1	138
	Through-Right		1							1				1				1	
	Right	644	0	**524**	50	694	**560**	0	673	0	**548**	50	723	0	**584**	0	723	0	**584**
	Left-Through-Right		0							0				0				0	
	Left-Right		0							0				0				0	
SOUTHBOUND	Left	85	1	**85**	0	85	**85**	3	92	1	**92**	0	92	1	**92**	0	92	1	**92**
	Left-Through		0							0				0				0	
	Through	70	2	35	0	70	35	0	73	2	37	0	73	2	37	0	73	2	37
	Through-Right		0							0				0				0	
	Right	0	0	0	0	0	0	0	0	0	0	0	0	0	0	0	0	0	0
	Left-Through-Right		0							0				0				0	
	Left-Right		0							0				0				0	
EASTBOUND	Left	0	0	0	0	0	0	0	0	0	0	0	0	0	0	0	0	0	0
	Left-Through		0							0				0				0	
	Through	0	0	**0**	0	0	**0**	0	0	0	**0**	0	0	0	**0**	0	0	0	**0**
	Through-Right		0							0				0				0	
	Right	0	0	0	0	0	0	0	0	0	0	0	0	0	0	0	0	0	0
	Left-Through-Right		0							0				0				0	
	Left-Right		0							0				0				0	
WESTBOUND	Left	437	2	**240**	50	487	**268**	0	457	2	**251**	50	507	2	**279**	0	507	2	**279**
	Left-Through		0							0				0				0	
	Through	0	0	0	0	0	0	0	0	0	0	0	0	0	0	0	0	0	0
	Through-Right		0							0				0				0	
	Right	105	1	63	0	105	63	3	113	1	67	0	113	1	67	0	113	1	67
	Left-Through-Right		0							0				0				0	
	Left-Right		0							0				0				0	
CRITICAL VOLUMES			*North-South:*	609		*North-South:*	645		*North-South:*	640			*North-South:*	676			*North-South:*	676	
			East-West:	240		*East-West:*	268		*East-West:*	251			*East-West:*	279			*East-West:*	279	
			SUM:	849		*SUM:*	913		*SUM:*	891			*SUM:*	955			*SUM:*	955	
VOLUME/CAPACITY *(V/C)* RATIO:				0.596			0.641			0.625				0.670				0.670	
V/C LESS ATSAC/ATCS ADJUSTMENT:				0.596			0.641			0.625				0.670				0.670	
LEVEL OF SERVICE (LOS):				**A**			**B**			**B**				**B**				**B**	

REMARKS: Alt. Route 4: Using only Cal-Mat Pit. Based on field observations, over 1,750 vehicles currently traverse through the intersection during the peak hour. Fewer turning movements occur at the intersection due to the "T" intersection configuration. In addition, two primary movements which are complementary (i.e., NBRT/WBLT) occur during peak hours and are non-conflicting moves. A capacity of 1,425 vph is therefore utilized.

Version: 1i Beta; 8/4/2011

PROJECT IMPACT

Change in *v/c* due to project:	0.045	**Δ*v/c* after mitigation:**	0.045
Significant impacted?	NO	**Fully mitigated?**	N/A

Level of Service Workheet
(Circular 212 Method)

I/S #:	North-South Street:	I-5 Freeway SB Ramps	Year of Count:	2015	Ambient Growth: (%):	1.5	Conducted by:	City Traffic Counters	Date:	4/28/2015
CMA3	East-West Street:	Paxton Street	Projection Year:	2018	Peak Hour:	AM	Reviewed by:		Project:	Pacoima Reservoir Project/1-13-4

	Existing Condition	Existing Plus Project	Future Condition W/O Project	Future Condition W/ Project	Future W/ Project W/ Mitigation
No. of Phases	0	0	0	0	0
Opposed Ø'ing: N/S-1, E/W-2 or Both-3?	0	0	0	0	0
Right Turns: FREE-1, NRTOR-2 or OLA-3?	NB-- 0 SB-- 0 EB-- 0 WB-- 0	NB-- 0 SB-- 0 EB-- 0 WB-- 0	NB-- 0 SB-- 0 EB-- 0 WB-- 0	NB-- 0 SB-- 0 EB-- 0 WB-- 0	NB-- 0 SB-- 0 EB-- 0 WB-- 0
ATSAC-1 or ATSAC+ATCS-2?	0	0	0	0	0
Override Capacity	1200	1200	1200	1200	1200

	MOVEMENT	Existing Condition Volume	No. of Lanes	Lane Volume	Existing Plus Project Project Traffic	Total Volume	Lane Volume	Future Condition W/O Project Added Volume	Total Volume	No. of Lanes	Lane Volume	Future Condition W/ Project Added Volume	Total Volume	No. of Lanes	Lane Volume	Future W/ Project W/ Mitigation Added Volume	Total Volume	No. of Lanes	Lane Volume
NORTHBOUND	Left	2	0	**2**	0	2	**2**	0	2	0	**2**	0	2	0	**2**	0	2	0	**2**
	Left-Through		0							0				0				0	
	Through	2	0	103	0	2	103	0	2	0	111	0	2	0	111	0	2	0	111
	Through-Right		0							0				0				0	
	Right	99	0	0	0	99	0	3	107	0	0	0	107	0	0	0	107	0	0
	Left-Through-Right		1							1				1				1	
	Left-Right		0							0				0				0	
SOUTHBOUND	Left	124	0	124	0	124	124	1	131	0	131	0	131	0	131	0	131	0	131
	Left-Through		1							1				1				1	
	Through	11	0	135	0	11	135	0	12	0	143	0	12	0	143	0	12	0	143
	Through-Right		0							0				0				0	
	Right	373	1	**280**	0	373	**265**	1	391	1	**294**	0	391	1	**279**	0	391	1	**279**
	Left-Through-Right		0							0				0				0	
	Left-Right		0							0				0				0	
EASTBOUND	Left	186	1	**186**	30	216	**216**	1	195	1	**195**	30	225	1	**225**	0	225	1	**225**
	Left-Through		0							0				0				0	
	Through	526	1	264	20	546	274	2	552	1	277	20	572	1	287	0	572	1	287
	Through-Right		1							1				1				1	
	Right	1	0	1	0	1	1	0	1	0	1	0	1	0	1	0	1	0	1
	Left-Through-Right		0							0				0				0	
	Left-Right		0							0				0				0	
WESTBOUND	Left	35	1	35	0	35	35	3	40	1	40	0	40	1	40	0	40	1	40
	Left-Through		0							0				0				0	
	Through	363	1	**317**	50	413	**342**	2	382	1	**333**	50	432	1	**358**	0	432	1	**358**
	Through-Right		1							1				1				1	
	Right	270	0	270	0	270	270	1	283	0	283	0	283	0	283	0	283	0	283
	Left-Through-Right		0							0				0				0	
	Left-Right		0							0				0				0	
CRITICAL VOLUMES		*North-South:*		282	*North-South:*		267	*North-South:*			296	*North-South:*			281	*North-South:*			281
		East-West:		503	*East-West:*		558	*East-West:*			528	*East-West:*			583	*East-West:*			583
		SUM:		785	*SUM:*		825	*SUM:*			824	*SUM:*			864	*SUM:*			864
VOLUME/CAPACITY *(V/C)* RATIO:				0.654			0.688				0.687				0.720				0.720
V/C LESS ATSAC/ATCS ADJUSTMENT:				0.654			0.688				0.687				0.720				0.720
LEVEL OF SERVICE (LOS):				B			B				B				C				C

REMARKS: Alt. Route 4: Using only Cal-Mat Pit

Version: 1i Beta; 8/4/2011

PROJECT IMPACT

Change in *v/c* due to project:	0.033	Δ*v/c* after mitigation:	0.033
Significant impacted?	NO	Fully mitigated?	N/A

Level of Service Workheet
(Circular 212 Method)

I/S #:	North-South Street:	I-5 Freeway SB Ramps	Year of Count:	2015	Ambient Growth: (%):	1.5	Conducted by:	City Traffic Counters	Date:	4/28/2015
CMA3	East-West Street:	Paxton Street	Projection Year:	2018	Peak Hour:	Mid-Day	Reviewed by:		Project:	Pacoima Reservoir Project/1-13-4

No. of Phases				0				0				0				0				0			
Opposed Ø'ing: N/S-1, E/W-2 or Both-3?				0				0				0				0				0			
Right Turns: FREE-1, NRTOR-2 or OLA-3?	NB--	0	SB--	0	NB--	0	SB--	0	NB--	0	SB--	0	NB--	0	SB--	0	NB--	0	SB--	0			
	EB--	0	WB--	0	EB--	0	WB--	0	EB--	0	WB--	0	EB--	0	WB--	0	EB--	0	WB--	0			
ATSAC-1 or ATSAC+ATCS-2?				0				0				0				0				0			
Override Capacity				1200				1200				1200				1200				1200			

MOVEMENT		EXISTING CONDITION			EXISTING PLUS PROJECT			FUTURE CONDITION W/O PROJECT				FUTURE CONDITION W/ PROJECT				FUTURE W/ PROJECT W/ MITIGATION			
		Volume	No. of Lanes	Lane Volume	Project Traffic	Total Volume	Lane Volume	Added Volume	Total Volume	No. of Lanes	Lane Volume	Added Volume	Total Volume	No. of Lanes	Lane Volume	Added Volume	Total Volume	No. of Lanes	Lane Volume
NORTHBOUND	Left	0	0	0	0	0	0	0	0	0	0	0	0	0	0	0	0	0	0
	Left-Through		0							0				0				0	
	Through	1	0	**37**	0	1	**37**	0	1	0	**39**	0	1	0	**39**	0	1	0	**39**
	Through-Right		0							0				0				0	
	Right	36	0	0	0	36	0	0	38	0	0	0	38	0	0	0	38	0	0
	Left-Through-Right		1							1				1				1	
	Left-Right		0							0				0				0	
SOUTHBOUND	Left	66	0	**66**	0	66	**66**	1	70	0	**70**	0	70	0	**70**	0	70	0	**70**
	Left-Through		1							1				1				1	
	Through	7	0	73	0	7	73	0	7	0	77	0	7	0	77	0	7	0	77
	Through-Right		0							0				0				0	
	Right	33	1	5	0	33	0	1	36	1	6	0	36	1	0	0	36	1	0
	Left-Through-Right		0							0				0				0	
	Left-Right		0							0				0				0	
EASTBOUND	Left	56	1	**56**	30	86	**86**	1	60	1	**60**	30	90	1	**90**	0	90	1	**90**
	Left-Through		0							0				0				0	
	Through	348	1	175	20	368	185	2	366	1	184	20	386	1	194	0	386	1	194
	Through-Right		1							1				1				1	
	Right	2	0	2	0	2	2	0	2	0	2	0	2	0	2	0	2	0	2
	Left-Through-Right		0							0				0				0	
	Left-Right		0							0				0				0	
WESTBOUND	Left	35	1	35	0	35	35	0	37	1	37	0	37	1	37	0	37	1	37
	Left-Through		0							0				0				0	
	Through	351	1	**209**	50	401	**234**	2	369	1	**220**	50	419	1	**245**	0	419	1	**245**
	Through-Right		1							1				1				1	
	Right	67	0	67	0	67	67	1	71	0	71	0	71	0	71	0	71	0	71
	Left-Through-Right		0							0				0				0	
	Left-Right		0							0				0				0	
CRITICAL VOLUMES		*North-South:*		103	*North-South:*		103	*North-South:*			109	*North-South:*			109	*North-South:*			109
		East-West:		265	*East-West:*		320	*East-West:*			280	*East-West:*			335	*East-West:*			335
		SUM:		368	*SUM:*		423	*SUM:*			389	*SUM:*			444	*SUM:*			444
VOLUME/CAPACITY *(V/C)* RATIO:				0.307			0.353				0.324				0.370				0.370
V/C LESS ATSAC/ATCS ADJUSTMENT:				0.307			0.353				0.324				0.370				0.370
LEVEL OF SERVICE (LOS):				A			A				A				A				A

REMARKS: Alt. Route 4: Using only Cal-Mat Pit

Version: 1i Beta; 8/4/2011

PROJECT IMPACT

Change in *v/c* due to project:	0.046	Δ*v/c* after mitigation:	0.046
Significant impacted?	NO	Fully mitigated?	N/A

Level of Service Workheet
(Circular 212 Method)

I/S #:	North-South Street:	I-5 Freeway SB Ramps	Year of Count:	2015	Ambient Growth: (%):	1.5	Conducted by:	City Traffic Counters	Date:	4/28/2015
CMA3	East-West Street:	Paxton Street	Projection Year:	2018	Peak Hour:	PM	Reviewed by:		Project:	Pacoima Reservoir Project/1-13-4

	Existing Condition			Existing Plus Project			Future Condition W/O Project			Future Condition W/ Project			Future W/ Project W/ Mitigation		
No. of Phases			0			0			0			0			0
Opposed Ø'ing: N/S-1, E/W-2 or Both-3?			0			0			0			0			0
Right Turns: FREE-1, NRTOR-2 or OLA-3?	NB-- 0	SB--	0	NB-- 0	SB--	0	NB-- 0	SB--	0	NB-- 0	SB--	0	NB-- 0	SB--	0
	EB-- 0	WB--	0	EB-- 0	WB--	0	EB-- 0	WB--	0	EB-- 0	WB--	0	EB-- 0	WB--	0
ATSAC-1 or ATSAC+ATCS-2?			0			0			0			0			0
Override Capacity			1200			1200			1200			1200			1200

	MOVEMENT	Existing Condition Volume	No. of Lanes	Lane Volume	Existing Plus Project Project Traffic	Total Volume	Lane Volume	Future Condition W/O Project Added Volume	Total Volume	No. of Lanes	Lane Volume	Future Condition W/ Project Added Volume	Total Volume	No. of Lanes	Lane Volume	Future W/ Project W/ Mitigation Added Volume	Total Volume	No. of Lanes	Lane Volume
NORTHBOUND	Left	1	0	1	0	1	1	0	1	0	1	0	1	0	1	0	1	0	1
	Left-Through		0							0				0				0	
	Through	2	0	**61**	0	2	**61**	0	2	0	**66**	0	2	0	**66**	0	2	0	**66**
	Through-Right		0							0				0				0	
	Right	58	0	0	0	58	0	2	63	0	0	0	63	0	0	0	63	0	0
	Left-Through-Right		1							1				1				1	
	Left-Right		0							0				0				0	
SOUTHBOUND	Left	145	0	**145**	0	145	**145**	1	153	0	**153**	0	153	0	**153**	0	153	0	**153**
	Left-Through		1							1				1				1	
	Through	14	0	159	0	14	159	0	15	0	168	0	15	0	168	0	15	0	168
	Through-Right		0							0				0				0	
	Right	117	1	88	0	117	73	1	123	1	92	0	123	1	77	0	123	1	77
	Left-Through-Right		0							0				0				0	
	Left-Right		0							0				0				0	
EASTBOUND	Left	58	1	58	30	88	88	1	62	1	62	30	92	1	92	0	92	1	92
	Left-Through		0							0				0				0	
	Through	672	1	**340**	20	692	**350**	2	705	1	**357**	20	725	1	**367**	0	725	1	**367**
	Through-Right		1							1				1				1	
	Right	8	0	8	0	8	8	0	8	0	8	0	8	0	8	0	8	0	8
	Left-Through-Right		0							0				0				0	
	Left-Right		0							0				0				0	
WESTBOUND	Left	71	1	**71**	0	71	**71**	2	76	1	**76**	0	76	1	**76**	0	76	1	**76**
	Left-Through		0							0				0				0	
	Through	409	1	245	50	459	270	2	430	1	258	50	480	1	283	0	480	1	283
	Through-Right		1							1				1				1	
	Right	81	0	81	0	81	81	1	86	0	86	0	86	0	86	0	86	0	86
	Left-Through-Right		0							0				0				0	
	Left-Right		0							0				0				0	
CRITICAL VOLUMES		*North-South:*		206	*North-South:*		206	*North-South:*			219	*North-South:*			219	*North-South:*			219
		East-West:		411	*East-West:*		421	*East-West:*			433	*East-West:*			443	*East-West:*			443
		SUM:		617	*SUM:*		627	*SUM:*			652	*SUM:*			662	*SUM:*			662
VOLUME/CAPACITY *(V/C)* RATIO:				0.514			0.523				0.543				0.552				0.552
V/C LESS ATSAC/ATCS ADJUSTMENT:				0.514			0.523				0.543				0.552				0.552
LEVEL OF SERVICE (LOS):				A			A				A				A				A

REMARKS: Alt. Route 4: Using only Cal-Mat Pit

Version: 1i Beta; 8/4/2011

PROJECT IMPACT

Change in *v/c* due to project:	0.009	Δ*v/c* after mitigation:	0.009
Significant impacted?	NO	Fully mitigated?	N/A

Level of Service Workheet
(Circular 212 Method)

I/S #:	North-South Street:	I-5 Freeway NB Ramps	Year of Count:	2015	Ambient Growth: (%):	1.5	Conducted by:	City Traffic Counters	Date:	4/28/2015
CMA4	East-West Street:	Paxton Street	Projection Year:	2018	Peak Hour:	AM	Reviewed by:		Project:	Pacoima Reservoir Project/1-13-4

	EXISTING CONDITION			EXISTING PLUS PROJECT			FUTURE CONDITION W/O PROJECT				FUTURE CONDITION W/ PROJECT				FUTURE W/ PROJECT W/ MITIGATION			
No. of Phases			0			0				0				0				0
Opposed Ø'ing: N/S-1, E/W-2 or Both-3?			0			0				0				0				0
Right Turns: FREE-1, NRTOR-2 or OLA-3?	NB-- 0	SB--	0	NB-- 0	SB--	0	NB-- 0	SB--	0		NB-- 0	SB--	0		NB-- 0	SB--	0	
	EB-- 0	WB--	0	EB-- 0	WB--	0	EB-- 0	WB--	0		EB-- 0	WB--	0		EB-- 0	WB--	0	
ATSAC-1 or ATSAC+ATCS-2?			0			0				0				0				0
Override Capacity			1200			1200				1200				1200				1200

	MOVEMENT	EXISTING CONDITION Volume	No. of Lanes	Lane Volume	EXISTING PLUS PROJECT Project Traffic	Total Volume	Lane Volume	FUTURE CONDITION W/O PROJECT Added Volume	Total Volume	No. of Lanes	Lane Volume	FUTURE CONDITION W/ PROJECT Added Volume	Total Volume	No. of Lanes	Lane Volume	FUTURE W/ PROJECT W/ MITIGATION Added Volume	Total Volume	No. of Lanes	Lane Volume
NORTHBOUND	Left	12	0	12	0	12	12	0	13	0	13	0	13	0	13	0	13	0	13
	Left-Through		0							0				0				0	
	Through	19	0	**105**	0	19	**105**	0	20	0	**113**	0	20	0	**113**	0	20	0	**113**
	Through-Right		0							0				0				0	
	Right	74	0	0	0	74	0	3	80	0	0	0	80	0	0	0	80	0	0
	Left-Through-Right		1							1				1				1	
	Left-Right		0							0				0				0	
SOUTHBOUND	Left	24	0	**24**	0	24	**24**	1	26	0	**26**	0	26	0	**26**	0	26	0	**26**
	Left-Through		1							1				1				1	
	Through	1	0	25	0	1	25	0	1	0	27	0	1	0	27	0	1	0	27
	Through-Right		0							0				0				0	
	Right	44	1	0	30	74	0	1	47	1	0	30	77	1	0	0	77	1	0
	Left-Through-Right		0							0				0				0	
	Left-Right		0							0				0				0	
EASTBOUND	Left	200	1	**200**	0	200	**200**	1	210	1	**210**	0	210	1	**210**	0	210	1	**210**
	Left-Through		0							0				0				0	
	Through	502	1	265	20	522	275	5	530	1	279	20	550	1	289	0	550	1	289
	Through-Right		1							1				1				1	
	Right	27	0	27	0	27	27	0	28	0	28	0	28	0	28	0	28	0	28
	Left-Through-Right		0							0				0				0	
	Left-Right		0							0				0				0	
WESTBOUND	Left	50	1	50	0	50	50	3	55	1	55	0	55	1	55	0	55	1	55
	Left-Through		0							0				0				0	
	Through	637	1	**368**	20	657	**378**	5	671	1	**388**	20	691	1	**398**	0	691	1	**398**
	Through-Right		1							1				1				1	
	Right	99	0	99	0	99	99	1	105	0	105	0	105	0	105	0	105	0	105
	Left-Through-Right		0							0				0				0	
	Left-Right		0							0				0				0	
CRITICAL VOLUMES		*North-South:*	129	*North-South:*		129	*North-South:*			139	*North-South:*			139	*North-South:*			139
		East-West:	568	*East-West:*		578	*East-West:*			598	*East-West:*			608	*East-West:*			608
		SUM:	697	*SUM:*		707	*SUM:*			737	*SUM:*			747	*SUM:*			747
VOLUME/CAPACITY *(V/C)* RATIO:			0.581			0.589				0.614				0.623				0.623
V/C LESS ATSAC/ATCS ADJUSTMENT:			0.581			0.589				0.614				0.623				0.623
LEVEL OF SERVICE (LOS):			A			A				B				B				B

REMARKS: Alt. Route 4: Using only Cal-Mat Pit

Version: 1i Beta; 8/4/2011

PROJECT IMPACT

Change in *v/c* due to project:	0.009	Δ*v/c* after mitigation:	0.009
Significant impacted?	NO	Fully mitigated?	N/A

Level of Service Workheet
(Circular 212 Method)

I/S #:	North-South Street:	I-5 Freeway NB Ramps	Year of Count:	2015	Ambient Growth: (%):	1.5	Conducted by:	City Traffic Counters	Date:	4/28/2015
CMA4	East-West Street:	Paxton Street	Projection Year:	2018	Peak Hour:	Mid-Day	Reviewed by:		Project:	Pacoima Reservoir Project/1-13-4

No. of Phases				0				0				0				0				0			0
Opposed Ø'ing: N/S-1, E/W-2 or Both-3?				0				0				0				0				0			0
Right Turns: FREE-1, NRTOR-2 or OLA-3?	NB--	0	SB--	0	NB--	0	SB--	0	NB--	0	SB--	0	NB--	0	SB--	0	NB--	0	SB--	0	NB--	0	SB--	0
	EB--	0	WB--	0	EB--	0	WB--	0	EB--	0	WB--	0	EB--	0	WB--	0	EB--	0	WB--	0	EB--	0	WB--	0
ATSAC-1 or ATSAC+ATCS-2?				0				0				0				0				0				0
Override Capacity				1200				1200				1200				1200				1200				1200

MOVEMENT		EXISTING CONDITION			EXISTING PLUS PROJECT			FUTURE CONDITION W/O PROJECT				FUTURE CONDITION W/ PROJECT				FUTURE W/ PROJECT W/ MITIGATION			
		Volume	No. of Lanes	Lane Volume	Project Traffic	Total Volume	Lane Volume	Added Volume	Total Volume	No. of Lanes	Lane Volume	Added Volume	Total Volume	No. of Lanes	Lane Volume	Added Volume	Total Volume	No. of Lanes	Lane Volume
NORTHBOUND	Left	15	0	15	0	15	15	0	16	0	16	0	16	0	16	0	16	0	16
	Left-Through		0							0				0				0	
	Through	22	0	**70**	0	22	**70**	0	23	0	**74**	0	23	0	**74**	0	23	0	**74**
	Through-Right		0							0				0				0	
	Right	33	0	0	0	33	0	0	35	0	0	0	35	0	0	0	35	0	0
	Left-Through-Right		1							1				1				1	
	Left-Right		0							0				0				0	
SOUTHBOUND	Left	52	0	**52**	0	52	**52**	1	55	0	**55**	0	55	0	**55**	0	55	0	**55**
	Left-Through		1							1				1				1	
	Through	3	0	55	0	3	55	0	3	0	58	0	3	0	58	0	3	0	58
	Through-Right		0							0				0				0	
	Right	66	1	24	30	96	54	1	70	1	25	30	100	1	55	0	100	1	55
	Left-Through-Right		0							0				0				0	
	Left-Right		0							0				0				0	
EASTBOUND	Left	85	1	**85**	0	85	**85**	1	90	1	**90**	0	90	1	**90**	0	90	1	**90**
	Left-Through		0							0				0				0	
	Through	355	1	190	20	375	200	2	373	1	199	20	393	1	209	0	393	1	209
	Through-Right		1							1				1				1	
	Right	24	0	24	0	24	24	0	25	0	25	0	25	0	25	0	25	0	25
	Left-Through-Right		0							0				0				0	
	Left-Right		0							0				0				0	
WESTBOUND	Left	12	1	12	0	12	12	0	13	1	13	0	13	1	13	0	13	1	13
	Left-Through		0							0				0				0	
	Through	363	1	**229**	20	383	**239**	2	382	1	**241**	20	402	1	**251**	0	402	1	**251**
	Through-Right		1							1				1				1	
	Right	94	0	94	0	94	94	1	99	0	99	0	99	0	99	0	99	0	99
	Left-Through-Right		0							0				0				0	
	Left-Right		0							0				0				0	
CRITICAL VOLUMES		*North-South:*		122	*North-South:*		122	*North-South:*			129	*North-South:*			129	*North-South:*			129
		East-West:		314	*East-West:*		324	*East-West:*			331	*East-West:*			341	*East-West:*			341
		SUM:		436	*SUM:*		446	*SUM:*			460	*SUM:*			470	*SUM:*			470
VOLUME/CAPACITY *(V/C)* RATIO:				0.363			0.372				0.383				0.392				0.392
V/C LESS ATSAC/ATCS ADJUSTMENT:				0.363			0.372				0.383				0.392				0.392
LEVEL OF SERVICE (LOS):				A			A				A				A				A

REMARKS: Alt. Route 4: Using only Cal-Mat Pit

Version: 1i Beta; 8/4/2011

PROJECT IMPACT

Change in *v/c* due to project:	0.009	Δ*v/c* after mitigation:	0.009
Significant impacted?	NO	Fully mitigated?	N/A

Level of Service Workheet
(Circular 212 Method)

I/S #:	North-South Street:	I-5 Freeway NB Ramps	Year of Count:	2015	Ambient Growth: (%):	1.5	Conducted by:	City Traffic Counters	Date:	4/28/2015
CMA4	East-West Street:	Paxton Street	Projection Year:	2018	Peak Hour:	PM	Reviewed by:		Project:	Pacoima Reservoir Project/1-13-4

No. of Phases				0				0				0				0				0			0
Opposed Ø'ing: N/S-1, E/W-2 or Both-3?				0				0				0				0				0			0
Right Turns: FREE-1, NRTOR-2 or OLA-3?	NB--	0	SB--	0	NB--	0	SB--	0	NB--	0	SB--	0	NB--	0	SB--	0	NB--	0	SB--	0	NB--	0	SB-- 0
	EB--	0	WB--	0	EB--	0	WB--	0	EB--	0	WB--	0	EB--	0	WB--	0	EB--	0	WB--	0	EB--	0	WB-- 0
ATSAC-1 or ATSAC+ATCS-2?				0				0				0				0				0			0
Override Capacity				1200				1200				1200				1200				1200			1200

MOVEMENT		EXISTING CONDITION			EXISTING PLUS PROJECT			FUTURE CONDITION W/O PROJECT				FUTURE CONDITION W/ PROJECT				FUTURE W/ PROJECT W/ MITIGATION			
		Volume	No. of Lanes	Lane Volume	Project Traffic	Total Volume	Lane Volume	Added Volume	Total Volume	No. of Lanes	Lane Volume	Added Volume	Total Volume	No. of Lanes	Lane Volume	Added Volume	Total Volume	No. of Lanes	Lane Volume
NORTHBOUND	Left	6	0	6	0	6	6	0	6	0	6	0	6	0	6	0	6	0	6
	Left-Through		0							0				0				0	
	Through	8	0	**57**	0	8	**57**	0	8	0	**61**	0	8	0	**61**	0	8	0	**61**
	Through-Right		0							0				0				0	
	Right	43	0	0	0	43	0	2	47	0	0	0	47	0	0	0	47	0	0
	Left-Through-Right		1							1				1				1	
	Left-Right		0							0				0				0	
SOUTHBOUND	Left	69	0	**69**	0	69	**69**	1	73	0	**73**	0	73	0	**73**	0	73	0	**73**
	Left-Through		1							1				1				1	
	Through	6	0	75	0	6	75	0	6	0	79	0	6	0	79	0	6	0	79
	Through-Right		0							0				0				0	
	Right	57	1	0	30	87	0	1	61	1	0	30	91	1	0	0	91	1	0
	Left-Through-Right		0							0				0				0	
	Left-Right		0							0				0				0	
EASTBOUND	Left	226	1	**226**	0	226	**226**	1	237	1	**237**	0	237	1	**237**	0	237	1	**237**
	Left-Through		0							0				0				0	
	Through	623	1	322	20	643	332	4	655	1	338	20	675	1	348	0	675	1	348
	Through-Right		1							1				1				1	
	Right	20	0	20	0	20	20	0	21	0	21	0	21	0	21	0	21	0	21
	Left-Through-Right		0							0				0				0	
	Left-Right		0							0				0				0	
WESTBOUND	Left	14	1	14	0	14	14	2	17	1	17	0	17	1	17	0	17	1	17
	Left-Through		0							0				0				0	
	Through	489	1	**343**	20	509	**353**	4	515	1	**361**	20	535	1	**371**	0	535	1	**371**
	Through-Right		1							1				1				1	
	Right	197	0	197	0	197	197	1	207	0	207	0	207	0	207	0	207	0	207
	Left-Through-Right		0							0				0				0	
	Left-Right		0							0				0				0	
CRITICAL VOLUMES		*North-South:*		126	*North-South:*		126	*North-South:*			134	*North-South:*			134	*North-South:*			134
		East-West:		569	*East-West:*		579	*East-West:*			598	*East-West:*			608	*East-West:*			608
		SUM:		695	*SUM:*		705	*SUM:*			732	*SUM:*			742	*SUM:*			742
VOLUME/CAPACITY *(V/C)* RATIO:				0.579			0.588				0.610				0.618				0.618
V/C LESS ATSAC/ATCS ADJUSTMENT:				0.579			0.588				0.610				0.618				0.618
LEVEL OF SERVICE (LOS):				A			A				B				B				B

REMARKS: Alt. Route 4: Using only Cal-Mat Pit

Version: 1i Beta; 8/4/2011

PROJECT IMPACT

Change in *v/c* due to project:	0.008	Δ*v/c* after mitigation:	0.008
Significant impacted?	NO	Fully mitigated?	N/A

Level of Service Workheet
(Circular 212 Method)

I/S #:	North-South Street:	Laurel Canyon Boulevard	Year of Count:	2015	Ambient Growth: (%):	1.5	Conducted by:	City Traffic Counters	Date:	4/28/2015
CMA5	East-West Street:	Branford Street	Projection Year:	2018	Peak Hour:	AM	Reviewed by:		Project:	Pacoima Reservoir Project/1-13-4

No. of Phases				3				3				3				3				3		
Opposed Ø'ing: N/S-1, E/W-2 or Both-3?				0				0				0				0				0		
Right Turns: FREE-1, NRTOR-2 or OLA-3?	NB--	0	SB--	0	NB--	0	SB--	0	NB--	0	SB--	0	NB--	0	SB--	0	NB--	0	SB--	0		
	EB--	0	WB--	0	EB--	0	WB--	0	EB--	0	WB--	0	EB--	0	WB--	0	EB--	0	WB--	0		
ATSAC-1 or ATSAC+ATCS-2?				2				2				2				2				2		
Override Capacity				0				0				0				0				0		

	MOVEMENT	EXISTING CONDITION			EXISTING PLUS PROJECT			FUTURE CONDITION W/O PROJECT				FUTURE CONDITION W/ PROJECT				FUTURE W/ PROJECT W/ MITIGATION			
		Volume	No. of Lanes	Lane Volume	Project Traffic	Total Volume	Lane Volume	Added Volume	Total Volume	No. of Lanes	Lane Volume	Added Volume	Total Volume	No. of Lanes	Lane Volume	Added Volume	Total Volume	No. of Lanes	Lane Volume
NORTHBOUND	Left	149	2	**82**	0	149	**82**	0	156	2	**86**	0	156	2	**86**	0	156	2	**86**
	Left-Through		0							0				0				0	
	Through	397	1	271	0	397	271	12	427	1	290	0	427	1	290	0	427	1	290
	Through-Right		1							1				1				1	
	Right	145	0	145	0	145	145	0	152	0	152	0	152	0	152	0	152	0	152
	Left-Through-Right		0							0				0				0	
	Left-Right		0							0				0				0	
SOUTHBOUND	Left	136	2	75	0	136	75	1	143	2	79	0	143	2	79	0	143	2	79
	Left-Through		0							0				0				0	
	Through	984	1	**555**	0	984	**555**	8	1037	1	**588**	0	1037	1	**588**	0	1037	1	**588**
	Through-Right		1							1				1				1	
	Right	126	0	126	0	126	126	7	139	0	139	0	139	0	139	0	139	0	139
	Left-Through-Right		0							0				0				0	
	Left-Right		0							0				0				0	
EASTBOUND	Left	98	1	**98**	0	98	**98**	11	113	1	**113**	0	113	1	**113**	0	113	1	**113**
	Left-Through		0							0				0				0	
	Through	524	1	428	0	524	428	0	548	1	448	0	548	1	448	0	548	1	448
	Through-Right		1							1				1				1	
	Right	332	0	332	0	332	332	0	347	0	347	0	347	0	347	0	347	0	347
	Left-Through-Right		0							0				0				0	
	Left-Right		0							0				0				0	
WESTBOUND	Left	172	1	172	0	172	172	0	180	1	180	0	180	1	180	0	180	1	180
	Left-Through		0							0				0				0	
	Through	531	1	**531**	0	531	**531**	0	555	1	**555**	0	555	1	**555**	0	555	1	**555**
	Through-Right		0							0				0				0	
	Right	129	1	92	0	129	92	2	137	1	98	0	137	1	98	0	137	1	98
	Left-Through-Right		0							0				0				0	
	Left-Right		0							0				0				0	
CRITICAL VOLUMES		North-South:		637	North-South:		637	North-South:			674	North-South:			674	North-South:			674
		East-West:		629	East-West:		629	East-West:			668	East-West:			668	East-West:			668
		SUM:		1266	SUM:		1266	SUM:			1342	SUM:			1342	SUM:			1342
VOLUME/CAPACITY (V/C) RATIO:				0.888			0.888				0.942				0.942				0.942
V/C LESS ATSAC/ATCS ADJUSTMENT:				**0.788**			**0.788**				**0.842**				**0.842**				**0.842**
LEVEL OF SERVICE (LOS):				**C**			**C**				**D**				**D**				**D**

REMARKS: Alt. Route 4: Using only Cal-Mat Pit

Version: 1i Beta; 8/4/2011

PROJECT IMPACT

Change in *v/c* due to project:	0.000	Δ*v/c* after mitigation:	0.000
Significant impacted?	NO	Fully mitigated?	N/A

Level of Service Workheet
(Circular 212 Method)

I/S #:	North-South Street:	Laurel Canyon Boulevard	Year of Count:	2015	Ambient Growth: (%):	1.5	Conducted by:	City Traffic Counters	Date:	4/28/2015
CMA5	East-West Street:	Branford Street	Projection Year:	2018	Peak Hour:	Mid-Day	Reviewed by:		Project:	Pacoima Reservoir Project/1-13-4

No. of Phases				3				3				3				3				3			3
Opposed Ø'ing: N/S-1, E/W-2 or Both-3?				0				0				0				0				0			0
Right Turns: FREE-1, NRTOR-2 or OLA-3?	NB--	0	SB--	0	NB--	0	SB--	0	NB--	0	SB--	0	NB--	0	SB--	0	NB--	0	SB--	0	NB--	0	SB-- 0
	EB--	0	WB--	0	EB--	0	WB--	0	EB--	0	WB--	0	EB--	0	WB--	0	EB--	0	WB--	0	EB--	0	WB-- 0
ATSAC-1 or ATSAC+ATCS-2?				2				2				2				2				2			2
Override Capacity				0				0				0				0				0			0

	MOVEMENT	EXISTING CONDITION			EXISTING PLUS PROJECT			FUTURE CONDITION W/O PROJECT				FUTURE CONDITION W/ PROJECT				FUTURE W/ PROJECT W/ MITIGATION			
		Volume	No. of Lanes	Lane Volume	Project Traffic	Total Volume	Lane Volume	Added Volume	Total Volume	No. of Lanes	Lane Volume	Added Volume	Total Volume	No. of Lanes	Lane Volume	Added Volume	Total Volume	No. of Lanes	Lane Volume
NORTHBOUND	Left	94	2	52	0	94	52	0	98	2	54	0	98	2	54	0	98	2	54
	Left-Through		0							0				0				0	
	Through	455	1	**284**	0	455	**284**	1	477	1	**297**	0	477	1	**297**	0	477	1	**297**
	Through-Right		1							1				1				1	
	Right	112	0	112	0	112	112	0	117	0	117	0	117	0	117	0	117	0	117
	Left-Through-Right		0							0				0				0	
	Left-Right		0							0				0				0	
SOUTHBOUND	Left	89	2	**49**	0	89	**49**	0	93	2	**51**	0	93	2	**51**	0	93	2	**51**
	Left-Through		0							0				0				0	
	Through	380	1	256	0	380	256	1	398	1	268	0	398	1	268	0	398	1	268
	Through-Right		1							1				1				1	
	Right	131	0	131	0	131	131	0	137	0	137	0	137	0	137	0	137	0	137
	Left-Through-Right		0							0				0				0	
	Left-Right		0							0				0				0	
EASTBOUND	Left	114	1	**114**	0	114	**114**	0	119	1	**119**	0	119	1	**119**	0	119	1	**119**
	Left-Through		0							0				0				0	
	Through	243	1	202	0	243	202	0	254	1	211	0	254	1	211	0	254	1	211
	Through-Right		1							1				1				1	
	Right	160	0	160	0	160	160	0	167	0	167	0	167	0	167	0	167	0	167
	Left-Through-Right		0							0				0				0	
	Left-Right		0							0				0				0	
WESTBOUND	Left	91	1	91	0	91	91	0	95	1	95	0	95	1	95	0	95	1	95
	Left-Through		0							0				0				0	
	Through	265	1	**265**	0	265	**265**	0	277	1	**277**	0	277	1	**277**	0	277	1	**277**
	Through-Right		0							0				0				0	
	Right	117	1	93	0	117	93	0	122	1	97	0	122	1	97	0	122	1	97
	Left-Through-Right		0							0				0				0	
	Left-Right		0							0				0				0	
CRITICAL VOLUMES			*North-South:*	333		*North-South:*	333		*North-South:*	348			*North-South:*	348			*North-South:*	348	
			East-West:	379		*East-West:*	379		*East-West:*	396			*East-West:*	396			*East-West:*	396	
			SUM:	712		*SUM:*	712		*SUM:*	744			*SUM:*	744			*SUM:*	744	
VOLUME/CAPACITY *(V/C)* RATIO:				0.500			0.500				0.522				0.522				0.522
V/C LESS ATSAC/ATCS ADJUSTMENT:				**0.400**			**0.400**				**0.422**				**0.422**				**0.422**
LEVEL OF SERVICE (LOS):				**A**			**A**				**A**				**A**				**A**

REMARKS: Alt. Route 4: Using only Cal-Mat Pit

Version: 1i Beta; 8/4/2011

PROJECT IMPACT

Change in *v/c* due to project:	0.000	Δ*v/c* after mitigation:	0.000
Significant impacted?	NO	Fully mitigated?	N/A

Level of Service Workheet
(Circular 212 Method)

I/S #:	North-South Street:	Laurel Canyon Boulevard	Year of Count:	2015	Ambient Growth: (%):	1.5	Conducted by:	City Traffic Counters	Date:	4/28/2015
CMA5	East-West Street:	Branford Street	Projection Year:	2018	Peak Hour:	PM	Reviewed by:		Project:	Pacoima Reservoir Project/1-13-4

No. of Phases				3				3				3				3				3		
Opposed Ø'ing: N/S-1, E/W-2 or Both-3?				0				0				0				0				0		
Right Turns: FREE-1, NRTOR-2 or OLA-3?	NB--	0	SB--	0	NB--	0	SB--	0	NB--	0	SB--	0	NB--	0	SB--	0	NB--	0	SB--	0		
	EB--	0	WB--	0	EB--	0	WB--	0	EB--	0	WB--	0	EB--	0	WB--	0	EB--	0	WB--	0		
ATSAC-1 or ATSAC+ATCS-2?				2				2				2				2				2		
Override Capacity				0				0				0				0				0		

	MOVEMENT	EXISTING CONDITION			EXISTING PLUS PROJECT			FUTURE CONDITION W/O PROJECT				FUTURE CONDITION W/ PROJECT				FUTURE W/ PROJECT W/ MITIGATION			
		Volume	No. of Lanes	Lane Volume	Project Traffic	Total Volume	Lane Volume	Added Volume	Total Volume	No. of Lanes	Lane Volume	Added Volume	Total Volume	No. of Lanes	Lane Volume	Added Volume	Total Volume	No. of Lanes	Lane Volume
NORTHBOUND	Left	119	2	65	0	119	65	0	124	2	68	0	124	2	68	0	124	2	68
	Left-Through		0							0				0				0	
	Through	852	1	**501**	0	852	**501**	4	895	1	**526**	0	895	1	**526**	0	895	1	**526**
	Through-Right		1							1				1				1	
	Right	150	0	150	0	150	150	0	157	0	157	0	157	0	157	0	157	0	157
	Left-Through-Right		0							0				0				0	
	Left-Right		0							0				0				0	
SOUTHBOUND	Left	99	2	**54**	0	99	**54**	1	105	2	**58**	0	105	2	**58**	0	105	2	**58**
	Left-Through		0							0				0				0	
	Through	473	1	307	0	473	307	6	501	1	327	0	501	1	327	0	501	1	327
	Through-Right		1							1				1				1	
	Right	141	0	141	0	141	141	5	152	0	152	0	152	0	152	0	152	0	152
	Left-Through-Right		0							0				0				0	
	Left-Right		0							0				0				0	
EASTBOUND	Left	153	1	**153**	0	153	**153**	3	163	1	**163**	0	163	1	**163**	0	163	1	**163**
	Left-Through		0							0				0				0	
	Through	402	1	291	0	402	291	0	420	1	304	0	420	1	304	0	420	1	304
	Through-Right		1							1				1				1	
	Right	179	0	179	0	179	179	0	187	0	187	0	187	0	187	0	187	0	187
	Left-Through-Right		0							0				0				0	
	Left-Right		0							0				0				0	
WESTBOUND	Left	157	1	157	0	157	157	0	164	1	164	0	164	1	164	0	164	1	164
	Left-Through		0							0				0				0	
	Through	447	1	**447**	0	447	**447**	0	467	1	**467**	0	467	1	**467**	0	467	1	**467**
	Through-Right		0							0				0				0	
	Right	151	1	124	0	151	124	1	159	1	130	0	159	1	130	0	159	1	130
	Left-Through-Right		0							0				0				0	
	Left-Right		0							0				0				0	
CRITICAL VOLUMES			*North-South:*	555		*North-South:*	555		*North-South:*	584			*North-South:*	584			*North-South:*	584	
			East-West:	600		*East-West:*	600		*East-West:*	630			*East-West:*	630			*East-West:*	630	
			SUM:	1155		*SUM:*	1155		*SUM:*	1214			*SUM:*	1214			*SUM:*	1214	
VOLUME/CAPACITY *(V/C)* RATIO:				0.811			0.811				0.852				0.852				0.852
V/C LESS ATSAC/ATCS ADJUSTMENT:				0.711			0.711				0.752				0.752				0.752
LEVEL OF SERVICE (LOS):				C			C				C				C				C

REMARKS: Alt. Route 4: Using only Cal-Mat Pit

Version: 1i Beta; 8/4/2011

PROJECT IMPACT

Change in *v/c* due to project:	0.000	Δ*v/c* after mitigation:	0.000
Significant impacted?	NO	Fully mitigated?	N/A

Level of Service Workheet
(Circular 212 Method)

I/S #:	North-South Street:	San Fernando Road	Year of Count:	2015	Ambient Growth: (%):	1.5	Conducted by:	City Traffic Counters	Date:	4/28/2015
CMA6	East-West Street:	Branford Street	Projection Year:	2018	Peak Hour:	AM	Reviewed by:		Project:	Pacoima Reservoir Project/1-13-4

No. of Phases				4				4				4				4				4			4
Opposed Ø'ing: N/S-1, E/W-2 or Both-3?				0				0				0				0				0			0
Right Turns: FREE-1, NRTOR-2 or OLA-3?	NB--	0	SB--	0	NB--	0	SB--	0	NB--	0	SB--	0	NB--	0	SB--	0	NB--	0	SB--	0	NB--	0	SB--	0
	EB--	0	WB--	0	EB--	0	WB--	0	EB--	0	WB--	0	EB--	0	WB--	0	EB--	0	WB--	0	EB--	0	WB--	0
ATSAC-1 or ATSAC+ATCS-2?				2				2				2				2				2			2
Override Capacity				0				0				0				0				0			0

	MOVEMENT	EXISTING CONDITION			EXISTING PLUS PROJECT			FUTURE CONDITION W/O PROJECT				FUTURE CONDITION W/ PROJECT				FUTURE W/ PROJECT W/ MITIGATION			
		Volume	No. of Lanes	Lane Volume	Project Traffic	Total Volume	Lane Volume	Added Volume	Total Volume	No. of Lanes	Lane Volume	Added Volume	Total Volume	No. of Lanes	Lane Volume	Added Volume	Total Volume	No. of Lanes	Lane Volume
NORTHBOUND	Left	99	1	**99**	0	99	**99**	0	104	1	**104**	0	104	1	**104**	0	104	1	**104**
	Left-Through		0							0				0				0	
	Through	405	1	282	20	425	292	4	427	1	297	20	447	1	307	0	447	1	307
	Through-Right		1							1				1				1	
	Right	159	0	159	0	159	159	0	166	0	166	0	166	0	166	0	166	0	166
	Left-Through-Right		0							0				0				0	
	Left-Right		0							0				0				0	
SOUTHBOUND	Left	81	1	81	0	81	81	0	85	1	85	0	85	1	85	0	85	1	85
	Left-Through		0							0				0				0	
	Through	965	1	**540**	20	985	**550**	8	1017	1	**569**	20	1037	1	**579**	0	1037	1	**579**
	Through-Right		1							1				1				1	
	Right	115	0	115	0	115	115	0	120	0	120	0	120	0	120	0	120	0	120
	Left-Through-Right		0							0				0				0	
	Left-Right		0							0				0				0	
EASTBOUND	Left	66	1	66	0	66	66	0	69	1	69	0	69	1	69	0	69	1	69
	Left-Through		0							0				0				0	
	Through	408	1	**408**	0	408	**408**	0	427	1	**427**	0	427	1	**427**	0	427	1	**427**
	Through-Right		0							0				0				0	
	Right	209	1	160	0	209	160	0	219	1	167	0	219	1	167	0	219	1	167
	Left-Through-Right		0							0				0				0	
	Left-Right		0							0				0				0	
WESTBOUND	Left	117	0	**117**	0	117	**117**	0	122	0	**122**	0	122	0	**122**	0	122	0	**122**
	Left-Through		0							0				0				0	
	Through	270	0	436	0	270	436	0	282	0	455	0	282	0	455	0	282	0	455
	Through-Right		0							0				0				0	
	Right	49	0	0	0	49	0	0	51	0	0	0	51	0	0	0	51	0	0
	Left-Through-Right		1							1				1				1	
	Left-Right		0							0				0				0	
CRITICAL VOLUMES		*North-South:*		639	*North-South:*		649	*North-South:*			673	*North-South:*			683	*North-South:*			683
		East-West:		525	*East-West:*		525	*East-West:*			549	*East-West:*			549	*East-West:*			549
		SUM:		1164	*SUM:*		1174	*SUM:*			1222	*SUM:*			1232	*SUM:*			1232
VOLUME/CAPACITY *(V/C)* RATIO:				0.847			0.854				0.889				0.896				0.896
V/C LESS ATSAC/ATCS ADJUSTMENT:				**0.747**			**0.754**				**0.789**				**0.796**				**0.796**
LEVEL OF SERVICE (LOS):				**C**			**C**				**C**				**C**				**C**

REMARKS: Alt. Route 4: Using only Cal-Mat Pit

Version: 1i Beta; 8/4/2011

PROJECT IMPACT

Change in *v/c* due to project:	0.007	Δ*v/c* after mitigation:	0.007
Significant impacted?	NO	Fully mitigated?	N/A

Level of Service Workheet
(Circular 212 Method)

I/S #:	North-South Street:	San Fernando Road	Year of Count:	2015	Ambient Growth: (%):	1.5	Conducted by:	City Traffic Counters	Date:	4/28/2015
CMA6	East-West Street:	Branford Street	Projection Year:	2018	Peak Hour:	Mid-Day	Reviewed by:		Project:	Pacoima Reservoir Project/1-13-4

No. of Phases				4				4				4				4				4			4
Opposed Ø'ing: N/S-1, E/W-2 or Both-3?				0				0				0				0				0			0
Right Turns: FREE-1, NRTOR-2 or OLA-3?	NB--	0	SB--	0	NB--	0	SB--	0	NB--	0	SB--	0	NB--	0	SB--	0	NB--	0	SB--	0	NB--	0	SB--	0
	EB--	0	WB--	0	EB--	0	WB--	0	EB--	0	WB--	0	EB--	0	WB--	0	EB--	0	WB--	0	EB--	0	WB--	0
ATSAC-1 or ATSAC+ATCS-2?				2				2				2				2				2			2
Override Capacity				0				0				0				0				0			0

	MOVEMENT	EXISTING CONDITION			EXISTING PLUS PROJECT			FUTURE CONDITION W/O PROJECT				FUTURE CONDITION W/ PROJECT				FUTURE W/ PROJECT W/ MITIGATION			
		Volume	No. of Lanes	Lane Volume	Project Traffic	Total Volume	Lane Volume	Added Volume	Total Volume	No. of Lanes	Lane Volume	Added Volume	Total Volume	No. of Lanes	Lane Volume	Added Volume	Total Volume	No. of Lanes	Lane Volume
NORTHBOUND	Left	61	1	61	0	61	61	0	64	1	64	0	64	1	64	0	64	1	64
	Left-Through		0							0				0				0	
	Through	442	1	**297**	20	462	**307**	8	470	1	**315**	20	490	1	**325**	0	490	1	**325**
	Through-Right		1							1				1				1	
	Right	152	0	152	0	152	152	0	159	0	159	0	159	0	159	0	159	0	159
	Left-Through-Right		0							0				0				0	
	Left-Right		0							0				0				0	
SOUTHBOUND	Left	82	1	**82**	0	82	**82**	0	86	1	**86**	0	86	1	**86**	0	86	1	**86**
	Left-Through		0							0				0				0	
	Through	423	1	254	20	443	264	6	448	1	269	20	468	1	279	0	468	1	279
	Through-Right		1							1				1				1	
	Right	85	0	85	0	85	85	0	89	0	89	0	89	0	89	0	89	0	89
	Left-Through-Right		0							0				0				0	
	Left-Right		0							0				0				0	
EASTBOUND	Left	43	1	**43**	0	43	**43**	0	45	1	**45**	0	45	1	**45**	0	45	1	**45**
	Left-Through		0							0				0				0	
	Through	227	1	227	0	227	227	0	237	1	237	0	237	1	237	0	237	1	237
	Through-Right		0							0				0				0	
	Right	97	1	67	0	97	67	0	101	1	69	0	101	1	69	0	101	1	69
	Left-Through-Right		0							0				0				0	
	Left-Right		0							0				0				0	
WESTBOUND	Left	110	0	110	0	110	110	0	115	0	115	0	115	0	115	0	115	0	115
	Left-Through		0							0				0				0	
	Through	229	0	**412**	0	229	**412**	0	239	0	**430**	0	239	0	**430**	0	239	0	**430**
	Through-Right		0							0				0				0	
	Right	73	0	0	0	73	0	0	76	0	0	0	76	0	0	0	76	0	0
	Left-Through-Right		1							1				1				1	
	Left-Right		0							0				0				0	
CRITICAL VOLUMES		*North-South:*		379	*North-South:*		389	*North-South:*			401	*North-South:*			411	*North-South:*			411
		East-West:		455	*East-West:*		455	*East-West:*			475	*East-West:*			475	*East-West:*			475
		SUM:		834	*SUM:*		844	*SUM:*			876	*SUM:*			886	*SUM:*			886
VOLUME/CAPACITY *(V/C)* RATIO:				0.607			0.614				0.637				0.644				0.644
V/C LESS ATSAC/ATCS ADJUSTMENT:				**0.507**			**0.514**				**0.537**				**0.544**				**0.544**
LEVEL OF SERVICE (LOS):				**A**			**A**				**A**				**A**				**A**

REMARKS: Alt. Route 4: Using only Cal-Mat Pit

Version: 1i Beta; 8/4/2011

PROJECT IMPACT

Change in *v/c* due to project:	0.007	Δ*v/c* after mitigation:	0.007
Significant impacted?	NO	Fully mitigated?	N/A

Level of Service Workheet
(Circular 212 Method)

I/S #:	North-South Street:	San Fernando Road	Year of Count:	2015	Ambient Growth: (%):	1.5	Conducted by:	City Traffic Counters	Date:	4/28/2015
CMA6	East-West Street:	Branford Street	Projection Year:	2018	Peak Hour:	PM	Reviewed by:		Project:	Pacoima Reservoir Project/1-13-4

No. of Phases				4				4				4				4				4			
Opposed Ø'ing: N/S-1, E/W-2 or Both-3?				0				0				0				0				0			
Right Turns: FREE-1, NRTOR-2 or OLA-3?	NB--	0	SB--	0	NB--	0	SB--	0	NB--	0	SB--	0	NB--	0	SB--	0	NB--	0	SB--	0			
	EB--	0	WB--	0	EB--	0	WB--	0	EB--	0	WB--	0	EB--	0	WB--	0	EB--	0	WB--	0			
ATSAC-1 or ATSAC+ATCS-2?				2				2				2				2				2			
Override Capacity				0				0				0				0				0			

	MOVEMENT	EXISTING CONDITION			EXISTING PLUS PROJECT			FUTURE CONDITION W/O PROJECT				FUTURE CONDITION W/ PROJECT				FUTURE W/ PROJECT W/ MITIGATION			
		Volume	No. of Lanes	Lane Volume	Project Traffic	Total Volume	Lane Volume	Added Volume	Total Volume	No. of Lanes	Lane Volume	Added Volume	Total Volume	No. of Lanes	Lane Volume	Added Volume	Total Volume	No. of Lanes	Lane Volume
NORTHBOUND	Left	104	1	104	0	104	104	0	109	1	109	0	109	1	109	0	109	1	109
	Left-Through		0							0				0				0	
	Through	681	1	**403**	20	701	**413**	8	720	1	**425**	20	740	1	**435**	0	740	1	**435**
	Through-Right		1							1				1				1	
	Right	124	0	124	0	124	124	0	130	0	130	0	130	0	130	0	130	0	130
	Left-Through-Right		0							0				0				0	
	Left-Right		0							0				0				0	
SOUTHBOUND	Left	58	1	**58**	0	58	**58**	0	61	1	**61**	0	61	1	**61**	0	61	1	**61**
	Left-Through		0							0				0				0	
	Through	374	1	229	20	394	239	6	397	1	243	20	417	1	253	0	417	1	253
	Through-Right		1							1				1				1	
	Right	84	0	84	0	84	84	0	88	0	88	0	88	0	88	0	88	0	88
	Left-Through-Right		0							0				0				0	
	Left-Right		0							0				0				0	
EASTBOUND	Left	61	1	**61**	0	61	**61**	0	64	1	**64**	0	64	1	**64**	0	64	1	**64**
	Left-Through		0							0				0				0	
	Through	264	1	264	0	264	264	0	276	1	276	0	276	1	276	0	276	1	276
	Through-Right		0							0				0				0	
	Right	68	1	16	0	68	16	0	71	1	17	0	71	1	17	0	71	1	17
	Left-Through-Right		0							0				0				0	
	Left-Right		0							0				0				0	
WESTBOUND	Left	113	0	113	0	113	113	0	118	0	118	0	118	0	118	0	118	0	118
	Left-Through		0							0				0				0	
	Through	314	0	**484**	0	314	**484**	0	328	0	**506**	0	328	0	**506**	0	328	0	**506**
	Through-Right		0							0				0				0	
	Right	57	0	0	0	57	0	0	60	0	0	0	60	0	0	0	60	0	0
	Left-Through-Right		1							1				1				1	
	Left-Right		0							0				0				0	
CRITICAL VOLUMES		*North-South:*		461	*North-South:*		471	*North-South:*			486	*North-South:*			496	*North-South:*			496
		East-West:		545	*East-West:*		545	*East-West:*			570	*East-West:*			570	*East-West:*			570
		SUM:		1006	*SUM:*		1016	*SUM:*			1056	*SUM:*			1066	*SUM:*			1066
VOLUME/CAPACITY *(V/C)* RATIO:				0.732			0.739				0.768				0.775				0.775
V/C LESS ATSAC/ATCS ADJUSTMENT:				**0.632**			**0.639**				**0.668**				**0.675**				**0.675**
LEVEL OF SERVICE (LOS):				**B**			**B**				**B**				**B**				**B**

REMARKS: Alt. Route 4: Using only Cal-Mat Pit

Version: 1i Beta; 8/4/2011

PROJECT IMPACT

Change in *v/c* due to project:	0.007	Δ*v/c* after mitigation:	0.007
Significant impacted?	NO	Fully mitigated?	N/A

Level of Service Workheet
(Circular 212 Method)

I/S #:	North-South Street:	Laurel Canyon Boulevard	Year of Count:	2015	Ambient Growth: (%):	1.5	Conducted by:	City Traffic Counters	Date:	4/28/2015
CMA7	East-West Street:	I-5 Freeway NB Off-Ramp	Projection Year:	2018	Peak Hour:	AM	Reviewed by:		Project:	Pacoima Reservoir Project/1-13-4

No. of Phases				0				0				0				0				0			0
Opposed Ø'ing: N/S-1, E/W-2 or Both-3?				0				0				0				0				0			0
Right Turns: FREE-1, NRTOR-2 or OLA-3?	NB--	0	SB--	0	NB--	0	SB--	0	NB--	0	SB--	0	NB--	0	SB--	0	NB--	0	SB--	0	NB--	0	SB-- 0
	EB--	0	WB--	0	EB--	0	WB--	0	EB--	0	WB--	0	EB--	0	WB--	0	EB--	0	WB--	0	EB--	0	WB-- 0
ATSAC-1 or ATSAC+ATCS-2?				0				0				0				0				0			0
Override Capacity				1200				1200				1200				1200				1200			1200

MOVEMENT		EXISTING CONDITION			EXISTING PLUS PROJECT			FUTURE CONDITION W/O PROJECT				FUTURE CONDITION W/ PROJECT				FUTURE W/ PROJECT W/ MITIGATION			
		Volume	No. of Lanes	Lane Volume	Project Traffic	Total Volume	Lane Volume	Added Volume	Total Volume	No. of Lanes	Lane Volume	Added Volume	Total Volume	No. of Lanes	Lane Volume	Added Volume	Total Volume	No. of Lanes	Lane Volume
NORTHBOUND	Left	0	0	**0**	0	0	**0**	0	0	0	**0**	0	0	0	**0**	0	0	0	**0**
	Left-Through		0							0				0				0	
	Through	535	1	278	0	535	278	12	571	1	297	0	571	1	297	0	571	1	297
	Through-Right		1							1				1				1	
	Right	21	0	21	0	21	21	0	22	0	22	0	22	0	22	0	22	0	22
	Left-Through-Right		0							0				0				0	
	Left-Right		0							0				0				0	
SOUTHBOUND	Left	79	1	79	0	79	79	0	83	1	83	0	83	1	83	0	83	1	83
	Left-Through		0							0				0				0	
	Through	1279	2	**640**	0	1279	**640**	8	1345	2	**673**	0	1345	2	**673**	0	1345	2	**673**
	Through-Right		0							0				0				0	
	Right	0	0	0	0	0	0	0	0	0	0	0	0	0	0	0	0	0	0
	Left-Through-Right		0							0				0				0	
	Left-Right		0							0				0				0	
EASTBOUND	Left	27	0	27	0	27	27	0	28	0	28	0	28	0	28	0	28	0	28
	Left-Through		1							1				1				1	
	Through	5	0	32	0	5	32	0	5	0	33	0	5	0	33	0	5	0	33
	Through-Right		0							0				0				0	
	Right	273	1	**273**	0	273	**273**	0	285	1	**285**	0	285	1	**285**	0	285	1	**285**
	Left-Through-Right		0							0				0				0	
	Left-Right		0							0				0				0	
WESTBOUND	Left	21	0	**21**	0	21	**21**	0	22	0	**22**	0	22	0	**22**	0	22	0	**22**
	Left-Through		0							0				0				0	
	Through	0	0	94	0	0	94	0	0	0	98	0	0	0	98	0	0	0	98
	Through-Right		0							0				0				0	
	Right	73	0	0	0	73	0	0	76	0	0	0	76	0	0	0	76	0	0
	Left-Through-Right		1							1				1				1	
	Left-Right		0							0				0				0	
CRITICAL VOLUMES		*North-South:*		640	*North-South:*		640	*North-South:*			673	*North-South:*			673	*North-South:*			673
		East-West:		294	*East-West:*		294	*East-West:*			307	*East-West:*			307	*East-West:*			307
		SUM:		934	*SUM:*		934	*SUM:*			980	*SUM:*			980	*SUM:*			980
VOLUME/CAPACITY *(V/C)* RATIO:				0.778			0.778				0.817				0.817				0.817
V/C LESS ATSAC/ATCS ADJUSTMENT:				0.778			0.778				0.817				0.817				0.817
LEVEL OF SERVICE (LOS):				C			C				D				D				D

REMARKS: Alt. Route 4: Using only Cal-Mat Pit

Version: 1i Beta; 8/4/2011

PROJECT IMPACT

Change in *v/c* due to project:	0.000	Δ*v/c* after mitigation:	0.000
Significant impacted?	NO	Fully mitigated?	N/A

Level of Service Workheet
(Circular 212 Method)

I/S #:	North-South Street:	Laurel Canyon Boulevard	Year of Count:	2015	Ambient Growth: (%):	1.5	Conducted by:	City Traffic Counters	Date:	4/28/2015
CMA7	East-West Street:	I-5 Freeway NB Off-Ramp	Projection Year:	2018	Peak Hour:	Mid-Day	Reviewed by:		Project:	Pacoima Reservoir Project/1-13-4

No. of Phases				0				0				0				0				0			0
Opposed Ø'ing: N/S-1, E/W-2 or Both-3?				0				0				0				0				0			0
Right Turns: FREE-1, NRTOR-2 or OLA-3?	NB--	0	SB--	0	NB--	0	SB--	0	NB--	0	SB--	0	NB--	0	SB--	0	NB--	0	SB--	0	NB--	0	SB-- 0
	EB--	0	WB--	0	EB--	0	WB--	0	EB--	0	WB--	0	EB--	0	WB--	0	EB--	0	WB--	0	EB--	0	WB-- 0
ATSAC-1 or ATSAC+ATCS-2?				0				0				0				0				0			0
Override Capacity				1200				1200				1200				1200				1200			1200

MOVEMENT		EXISTING CONDITION			EXISTING PLUS PROJECT			FUTURE CONDITION W/O PROJECT				FUTURE CONDITION W/ PROJECT				FUTURE W/ PROJECT W/ MITIGATION			
		Volume	No. of Lanes	Lane Volume	Project Traffic	Total Volume	Lane Volume	Added Volume	Total Volume	No. of Lanes	Lane Volume	Added Volume	Total Volume	No. of Lanes	Lane Volume	Added Volume	Total Volume	No. of Lanes	Lane Volume
NORTHBOUND	Left	0	0	**0**	0	0	**0**	0	0	0	**0**	0	0	0	**0**	0	0	0	**0**
	Left-Through		0							0				0				0	
	Through	386	1	207	0	386	207	1	405	1	217	0	405	1	217	0	405	1	217
	Through-Right		1							1				1				1	
	Right	28	0	28	0	28	28	0	29	0	29	0	29	0	29	0	29	0	29
	Left-Through-Right		0							0				0				0	
	Left-Right		0							0				0				0	
SOUTHBOUND	Left	28	1	28	0	28	28	0	29	1	29	0	29	1	29	0	29	1	29
	Left-Through		0							0				0				0	
	Through	499	2	**250**	0	499	**250**	1	523	2	**262**	0	523	2	**262**	0	523	2	**262**
	Through-Right		0							0				0				0	
	Right	0	0	0	0	0	0	0	0	0	0	0	0	0	0	0	0	0	0
	Left-Through-Right		0							0				0				0	
	Left-Right		0							0				0				0	
EASTBOUND	Left	40	0	40	0	40	40	0	42	0	42	0	42	0	42	0	42	0	42
	Left-Through		1							1				1				1	
	Through	7	0	47	0	7	47	0	7	0	49	0	7	0	49	0	7	0	49
	Through-Right		0							0				0				0	
	Right	142	1	**142**	0	142	**142**	0	148	1	**148**	0	148	1	**148**	0	148	1	**148**
	Left-Through-Right		0							0				0				0	
	Left-Right		0							0				0				0	
WESTBOUND	Left	17	0	**17**	0	17	**17**	0	18	0	**18**	0	18	0	**18**	0	18	0	**18**
	Left-Through		0							0				0				0	
	Through	0	0	41	0	0	41	0	0	0	43	0	0	0	43	0	0	0	43
	Through-Right		0							0				0				0	
	Right	24	0	0	0	24	0	0	25	0	0	0	25	0	0	0	25	0	0
	Left-Through-Right		1							1				1				1	
	Left-Right		0							0				0				0	
CRITICAL VOLUMES			*North-South:*	250		*North-South:*	250		*North-South:*	262			*North-South:*	262			*North-South:*	262	
			East-West:	159		*East-West:*	159		*East-West:*	166			*East-West:*	166			*East-West:*	166	
			SUM:	409		*SUM:*	409		*SUM:*	428			*SUM:*	428			*SUM:*	428	
VOLUME/CAPACITY *(V/C)* RATIO:				0.341			0.341				0.357				0.357				0.357
V/C LESS ATSAC/ATCS ADJUSTMENT:				0.341			0.341				0.357				0.357				0.357
LEVEL OF SERVICE (LOS):				A			A				A				A				A

REMARKS: Alt. Route 4: Using only Cal-Mat Pit

Version: 1i Beta; 8/4/2011

PROJECT IMPACT

Change in *v/c* due to project:	0.000	Δ*v/c* after mitigation:	0.000
Significant impacted?	NO	Fully mitigated?	N/A

Level of Service Workheet
(Circular 212 Method)

I/S #:	North-South Street:	Laurel Canyon Boulevard	Year of Count:	2015	Ambient Growth: (%):	1.5	Conducted by:	City Traffic Counters	Date:	4/28/2015
CMA7	East-West Street:	I-5 Freeway NB Off-Ramp	Projection Year:	2018	Peak Hour:	PM	Reviewed by:		Project:	Pacoima Reservoir Project/1-13-4

No. of Phases				0				0				0				0				0			0
Opposed Ø'ing: N/S-1, E/W-2 or Both-3?				0				0				0				0				0			0
Right Turns: FREE-1, NRTOR-2 or OLA-3?	NB--	0	SB--	0	NB--	0	SB--	0	NB--	0	SB--	0	NB--	0	SB--	0	NB--	0	SB--	0	NB--	0	SB-- 0
	EB--	0	WB--	0	EB--	0	WB--	0	EB--	0	WB--	0	EB--	0	WB--	0	EB--	0	WB--	0	EB--	0	WB-- 0
ATSAC-1 or ATSAC+ATCS-2?				0				0				0				0				0			0
Override Capacity				1200				1200				1200				1200				1200			1200

MOVEMENT		EXISTING CONDITION			EXISTING PLUS PROJECT			FUTURE CONDITION W/O PROJECT				FUTURE CONDITION W/ PROJECT				FUTURE W/ PROJECT W/ MITIGATION			
		Volume	No. of Lanes	Lane Volume	Project Traffic	Total Volume	Lane Volume	Added Volume	Total Volume	No. of Lanes	Lane Volume	Added Volume	Total Volume	No. of Lanes	Lane Volume	Added Volume	Total Volume	No. of Lanes	Lane Volume
NORTHBOUND	Left	0	0	0	0	0	0	0	0	0	0	0	0	0	0	0	0	0	0
	Left-Through		0							0				0				0	
	Through	1013	1	**522**	0	1013	**522**	4	1063	1	**547**	0	1063	1	**547**	0	1063	1	**547**
	Through-Right		1							1				1				1	
	Right	30	0	30	0	30	30	0	31	0	31	0	31	0	31	0	31	0	31
	Left-Through-Right		0							0				0				0	
	Left-Right		0							0				0				0	
SOUTHBOUND	Left	44	1	**44**	0	44	**44**	0	46	1	**46**	0	46	1	**46**	0	46	1	**46**
	Left-Through		0							0				0				0	
	Through	763	2	382	0	763	382	6	804	2	402	0	804	2	402	0	804	2	402
	Through-Right		0							0				0				0	
	Right	0	0	0	0	0	0	0	0	0	0	0	0	0	0	0	0	0	0
	Left-Through-Right		0							0				0				0	
	Left-Right		0							0				0				0	
EASTBOUND	Left	53	0	53	0	53	53	0	55	0	55	0	55	0	55	0	55	0	55
	Left-Through		1							1				1				1	
	Through	16	0	69	0	16	69	0	17	0	72	0	17	0	72	0	17	0	72
	Through-Right		0							0				0				0	
	Right	200	1	**200**	0	200	**200**	0	209	1	**209**	0	209	1	**209**	0	209	1	**209**
	Left-Through-Right		0							0				0				0	
	Left-Right		0							0				0				0	
WESTBOUND	Left	19	0	**19**	0	19	**19**	0	20	0	**20**	0	20	0	**20**	0	20	0	**20**
	Left-Through		0							0				0				0	
	Through	0	0	65	0	0	65	0	0	0	68	0	0	0	68	0	0	0	68
	Through-Right		0							0				0				0	
	Right	46	0	0	0	46	0	0	48	0	0	0	48	0	0	0	48	0	0
	Left-Through-Right		1							1				1				1	
	Left-Right		0							0				0				0	
CRITICAL VOLUMES		*North-South:*		566	*North-South:*		566	*North-South:*			593	*North-South:*			593	*North-South:*			593
		East-West:		219	*East-West:*		219	*East-West:*			229	*East-West:*			229	*East-West:*			229
		SUM:		785	*SUM:*		785	*SUM:*			822	*SUM:*			822	*SUM:*			822
VOLUME/CAPACITY *(V/C)* RATIO:				0.654			0.654				0.685				0.685				0.685
V/C LESS ATSAC/ATCS ADJUSTMENT:				0.654			0.654				0.685				0.685				0.685
LEVEL OF SERVICE (LOS):				**B**			**B**				**B**				**B**				**B**

REMARKS: Alt. Route 4: Using only Cal-Mat Pit

Version: 1i Beta; 8/4/2011

PROJECT IMPACT

Change in *v/c* due to project:	0.000	Δ*v/c* after mitigation:	0.000
Significant impacted?	NO	Fully mitigated?	N/A

Level of Service Workheet
(Circular 212 Method)

I/S #:	North-South Street:	Laurel Canyon Boulevard	Year of Count:	2015	Ambient Growth: (%):	1.5	Conducted by:	City Traffic Counters	Date:	4/28/2015
CMA8	East-West Street:	Sheldon Street	Projection Year:	2018	Peak Hour:	AM	Reviewed by:		Project:	Pacoima Reservoir Project/1-13-4

No. of Phases				2				2				2				2				2			2
Opposed Ø'ing: N/S-1, E/W-2 or Both-3?				0				0				0				0				0			0
Right Turns: FREE-1, NRTOR-2 or OLA-3?	NB--	0	SB--	0	NB--	0	SB--	0	NB--	0	SB--	0	NB--	0	SB--	0	NB--	0	SB--	0	NB--	0	SB-- 0
	EB--	0	WB--	0	EB--	0	WB--	0	EB--	0	WB--	0	EB--	0	WB--	0	EB--	0	WB--	0	EB--	0	WB-- 0
ATSAC-1 or ATSAC+ATCS-2?				2				2				2				2				2			2
Override Capacity				0				0				0				0				0			0

	MOVEMENT	EXISTING CONDITION			EXISTING PLUS PROJECT			FUTURE CONDITION W/O PROJECT				FUTURE CONDITION W/ PROJECT				FUTURE W/ PROJECT W/ MITIGATION			
		Volume	No. of Lanes	Lane Volume	Project Traffic	Total Volume	Lane Volume	Added Volume	Total Volume	No. of Lanes	Lane Volume	Added Volume	Total Volume	No. of Lanes	Lane Volume	Added Volume	Total Volume	No. of Lanes	Lane Volume
NORTHBOUND	Left	47	1	**47**	0	47	**47**	0	49	1	**49**	0	49	1	**49**	0	49	1	**49**
	Left-Through		0							0				0				0	
	Through	347	2	174	0	347	174	12	375	2	188	0	375	2	188	0	375	2	188
	Through-Right		0							0				0				0	
	Right	220	1	175	30	250	205	0	230	1	183	30	260	1	213	0	260	1	213
	Left-Through-Right		0							0				0				0	
	Left-Right		0							0				0				0	
SOUTHBOUND	Left	152	1	152	0	152	152	0	159	1	159	0	159	1	159	0	159	1	159
	Left-Through		0							0				0				0	
	Through	1202	1	**705**	0	1202	**705**	8	1265	1	**742**	0	1265	1	**742**	0	1265	1	**742**
	Through-Right		1							1				1				1	
	Right	208	0	208	0	208	208	0	218	0	218	0	218	0	218	0	218	0	218
	Left-Through-Right		0							0				0				0	
	Left-Right		0							0				0				0	
EASTBOUND	Left	129	1	**129**	0	129	**129**	0	135	1	**135**	0	135	1	**135**	0	135	1	**135**
	Left-Through		0							0				0				0	
	Through	804	1	462	0	804	462	0	841	1	483	0	841	1	483	0	841	1	483
	Through-Right		1							1				1				1	
	Right	119	0	119	0	119	119	0	124	0	124	0	124	0	124	0	124	0	124
	Left-Through-Right		0							0				0				0	
	Left-Right		0							0				0				0	
WESTBOUND	Left	91	1	91	0	91	91	0	95	1	95	0	95	1	95	0	95	1	95
	Left-Through		0							0				0				0	
	Through	857	1	**487**	0	857	**487**	0	896	1	**509**	0	896	1	**509**	0	896	1	**509**
	Through-Right		1							1				1				1	
	Right	116	0	116	0	116	116	0	121	0	121	0	121	0	121	0	121	0	121
	Left-Through-Right		0							0				0				0	
	Left-Right		0							0				0				0	
CRITICAL VOLUMES		*North-South:*		752	*North-South:*		752	*North-South:*			791	*North-South:*			791	*North-South:*			791
		East-West:		616	*East-West:*		616	*East-West:*			644	*East-West:*			644	*East-West:*			644
		SUM:		1368	*SUM:*		1368	*SUM:*			1435	*SUM:*			1435	*SUM:*			1435
VOLUME/CAPACITY *(V/C)* RATIO:				0.912			0.912				0.957				0.957				0.957
V/C LESS ATSAC/ATCS ADJUSTMENT:				**0.812**			**0.812**				**0.857**				**0.857**				**0.857**
LEVEL OF SERVICE (LOS):				**D**			**D**				**D**				**D**				**D**

REMARKS: Alt. Route 4: Using only Cal-Mat Pit

Version: 1i Beta; 8/4/2011

PROJECT IMPACT

Change in *v/c* due to project:	0.000	Δ*v/c* after mitigation:	0.000
Significant impacted?	NO	Fully mitigated?	N/A

Level of Service Workheet
(Circular 212 Method)

I/S #:	North-South Street:	Laurel Canyon Boulevard	Year of Count:	2015	Ambient Growth: (%):	1.5	Conducted by:	City Traffic Counters	Date:	4/28/2015
CMA8	East-West Street:	Sheldon Street	Projection Year:	2018	Peak Hour:	Mid-Day	Reviewed by:		Project:	Pacoima Reservoir Project/1-13-4

	Existing Condition	Existing Plus Project	Future Condition W/O Project	Future Condition W/ Project	Future W/ Project W/ Mitigation
No. of Phases	2	2	2	2	2
Opposed Ø'ing: N/S-1, E/W-2 or Both-3?	0	0	0	0	0
Right Turns: FREE-1, NRTOR-2 or OLA-3?	NB-- 0 SB-- 0 EB-- 0 WB-- 0	NB-- 0 SB-- 0 EB-- 0 WB-- 0	NB-- 0 SB-- 0 EB-- 0 WB-- 0	NB-- 0 SB-- 0 EB-- 0 WB-- 0	NB-- 0 SB-- 0 EB-- 0 WB-- 0
ATSAC-1 or ATSAC+ATCS-2?	2	2	2	2	2
Override Capacity	0	0	0	0	0

	MOVEMENT	Existing Condition Volume	No. of Lanes	Lane Volume	Existing Plus Project Project Traffic	Total Volume	Lane Volume	Future Cond. W/O Project Added Volume	Total Volume	No. of Lanes	Lane Volume	Future Cond. W/ Project Added Volume	Total Volume	No. of Lanes	Lane Volume	Future W/ Project W/ Mitigation Added Volume	Total Volume	No. of Lanes	Lane Volume
NORTHBOUND	Left	16	1	**16**	0	16	16	0	17	1	**17**	0	17	1	17	0	17	1	17
	Left-Through		0							0				0				0	
	Through	261	2	131	0	261	131	1	274	2	137	0	274	2	137	0	274	2	137
	Through-Right		0							0				0				0	
	Right	221	1	165	30	251	**195**	0	231	1	172	30	261	1	**202**	0	261	1	**202**
	Left-Through-Right		0							0				0				0	
	Left-Right		0							0				0				0	
SOUTHBOUND	Left	117	1	117	0	117	**117**	0	122	1	122	0	122	1	**122**	0	122	1	**122**
	Left-Through		0							0				0				0	
	Through	459	1	**281**	0	459	281	1	481	1	**294**	0	481	1	294	0	481	1	294
	Through-Right		1							1				1				1	
	Right	102	0	102	0	102	102	0	107	0	107	0	107	0	107	0	107	0	107
	Left-Through-Right		0							0				0				0	
	Left-Right		0							0				0				0	
EASTBOUND	Left	58	1	58	0	58	58	0	61	1	61	0	61	1	61	0	61	1	61
	Left-Through		0							0				0				0	
	Through	431	1	**274**	0	431	**274**	0	451	1	**287**	0	451	1	**287**	0	451	1	**287**
	Through-Right		1							1				1				1	
	Right	117	0	117	0	117	117	0	122	0	122	0	122	0	122	0	122	0	122
	Left-Through-Right		0							0				0				0	
	Left-Right		0							0				0				0	
WESTBOUND	Left	113	1	**113**	0	113	**113**	0	118	1	**118**	0	118	1	**118**	0	118	1	**118**
	Left-Through		0							0				0				0	
	Through	363	1	226	0	363	226	0	380	1	236	0	380	1	236	0	380	1	236
	Through-Right		1							1				1				1	
	Right	88	0	88	0	88	88	0	92	0	92	0	92	0	92	0	92	0	92
	Left-Through-Right		0							0				0				0	
	Left-Right		0							0				0				0	
CRITICAL VOLUMES		North-South:		297	North-South:		312	North-South:			311	North-South:			324	North-South:			324
		East-West:		387	East-West:		387	East-West:			405	East-West:			405	East-West:			405
		SUM:		684	SUM:		699	SUM:			716	SUM:			729	SUM:			729
VOLUME/CAPACITY (V/C) RATIO:				0.456			0.466				0.477				0.486				0.486
V/C LESS ATSAC/ATCS ADJUSTMENT:				**0.356**			**0.366**				**0.377**				**0.386**				**0.386**
LEVEL OF SERVICE (LOS):				**A**			**A**				**A**				**A**				**A**

REMARKS: Alt. Route 4: Using only Cal-Mat Pit

Version: 1i Beta; 8/4/2011

PROJECT IMPACT

Change in *v/c* due to project:	0.009	Δ*v/c* after mitigation:	0.009
Significant impacted?	NO	Fully mitigated?	N/A

Level of Service Workheet
(Circular 212 Method)

I/S #:	North-South Street:	Laurel Canyon Boulevard	Year of Count:	2015	Ambient Growth: (%):	1.5	Conducted by:	City Traffic Counters	Date:	4/28/2015
CMA8	East-West Street:	Sheldon Street	Projection Year:	2018	Peak Hour:	PM	Reviewed by:		Project:	Pacoima Reservoir Project/1-13-4

No. of Phases				2				2				2				2				2			2
Opposed Ø'ing: N/S-1, E/W-2 or Both-3?				0				0				0				0				0			0
Right Turns: FREE-1, NRTOR-2 or OLA-3?	NB--	0	SB--	0	NB--	0	SB--	0	NB--	0	SB--	0	NB--	0	SB--	0	NB--	0	SB--	0	NB--	0	SB-- 0
	EB--	0	WB--	0	EB--	0	WB--	0	EB--	0	WB--	0	EB--	0	WB--	0	EB--	0	WB--	0	EB--	0	WB-- 0
ATSAC-1 or ATSAC+ATCS-2?				2				2				2				2				2			2
Override Capacity				0				0				0				0				0			0

	MOVEMENT	EXISTING CONDITION			EXISTING PLUS PROJECT			FUTURE CONDITION W/O PROJECT				FUTURE CONDITION W/ PROJECT				FUTURE W/ PROJECT W/ MITIGATION			
		Volume	No. of Lanes	Lane Volume	Project Traffic	Total Volume	Lane Volume	Added Volume	Total Volume	No. of Lanes	Lane Volume	Added Volume	Total Volume	No. of Lanes	Lane Volume	Added Volume	Total Volume	No. of Lanes	Lane Volume
NORTHBOUND	Left	18	1	18	0	18	18	0	19	1	19	0	19	1	19	0	19	1	19
	Left-Through		0							0				0				0	
	Through	801	2	**401**	0	801	**401**	4	842	2	**421**	0	842	2	**421**	0	842	2	**421**
	Through-Right		0							0				0				0	
	Right	224	1	179	30	254	209	0	234	1	187	30	264	1	217	0	264	1	217
	Left-Through-Right		0							0				0				0	
	Left-Right		0							0				0				0	
SOUTHBOUND	Left	112	1	**112**	0	112	**112**	0	117	1	**117**	0	117	1	**117**	0	117	1	**117**
	Left-Through		0							0				0				0	
	Through	817	1	435	0	817	435	6	860	1	457	0	860	1	457	0	860	1	457
	Through-Right		1							1				1				1	
	Right	52	0	52	0	52	52	0	54	0	54	0	54	0	54	0	54	0	54
	Left-Through-Right		0							0				0				0	
	Left-Right		0							0				0				0	
EASTBOUND	Left	118	1	118	0	118	118	0	123	1	123	0	123	1	123	0	123	1	123
	Left-Through		0							0				0				0	
	Through	891	1	**483**	0	891	**483**	0	932	1	**505**	0	932	1	**505**	0	932	1	**505**
	Through-Right		1							1				1				1	
	Right	74	0	74	0	74	74	0	77	0	77	0	77	0	77	0	77	0	77
	Left-Through-Right		0							0				0				0	
	Left-Right		0							0				0				0	
WESTBOUND	Left	90	1	**90**	0	90	**90**	0	94	1	**94**	0	94	1	**94**	0	94	1	**94**
	Left-Through		0							0				0				0	
	Through	654	1	374	0	654	374	0	684	1	391	0	684	1	391	0	684	1	391
	Through-Right		1							1				1				1	
	Right	93	0	93	0	93	93	0	97	0	97	0	97	0	97	0	97	0	97
	Left-Through-Right		0							0				0				0	
	Left-Right		0							0				0				0	
CRITICAL VOLUMES		*North-South:*		513	*North-South:*		513	*North-South:*			538	*North-South:*			538	*North-South:*			538
		East-West:		573	*East-West:*		573	*East-West:*			599	*East-West:*			599	*East-West:*			599
		SUM:		1086	*SUM:*		1086	*SUM:*			1137	*SUM:*			1137	*SUM:*			1137
VOLUME/CAPACITY *(V/C)* RATIO:				0.724			0.724				0.758				0.758				0.758
V/C LESS ATSAC/ATCS ADJUSTMENT:				**0.624**			**0.624**				**0.658**				**0.658**				**0.658**
LEVEL OF SERVICE (LOS):				**B**			**B**				**B**				**B**				**B**

REMARKS: Alt. Route 4: Using only Cal-Mat Pit

Version: 1i Beta; 8/4/2011

PROJECT IMPACT

Change in *v/c* due to project:	0.000	Δ*v/c* after mitigation:	0.000
Significant impacted?	NO	Fully mitigated?	N/A

Level of Service Workheet
(Circular 212 Method)

I/S #:	North-South Street:	Laurel Canyon Boulevard	Year of Count:	2015	Ambient Growth: (%):	1.5	Conducted by:	City Traffic Counters	Date:	4/28/2015
CMA9	East-West Street:	I-5 Freeway SB Ramps	Projection Year:	2018	Peak Hour:	AM	Reviewed by:		Project:	Pacoima Reservoir Project/1-13-4

No. of Phases				0				0				0				0				0			
Opposed Ø'ing: N/S-1, E/W-2 or Both-3?				0				0				0				0				0			
Right Turns: FREE-1, NRTOR-2 or OLA-3?	NB--	0	SB--	0	NB--	0	SB--	0	NB--	0	SB--	0	NB--	0	SB--	0	NB--	0	SB--	0			
	EB--	0	WB--	0	EB--	0	WB--	0	EB--	0	WB--	0	EB--	0	WB--	0	EB--	0	WB--	0			
ATSAC-1 or ATSAC+ATCS-2?				0				0				0				0				0			
Override Capacity				1200				1200				1200				1200				1200			

	MOVEMENT	EXISTING CONDITION			EXISTING PLUS PROJECT			FUTURE CONDITION W/O PROJECT				FUTURE CONDITION W/ PROJECT				FUTURE W/ PROJECT W/ MITIGATION			
		Volume	No. of Lanes	Lane Volume	Project Traffic	Total Volume	Lane Volume	Added Volume	Total Volume	No. of Lanes	Lane Volume	Added Volume	Total Volume	No. of Lanes	Lane Volume	Added Volume	Total Volume	No. of Lanes	Lane Volume
NORTHBOUND	Left	0	0	0	0	0	0	0	0	0	0	0	0	0	0	0	0	0	0
	Left-Through		0							0				0				0	
	Through	600	1	**365**	0	600	**365**	12	639	1	**387**	0	639	1	**387**	0	639	1	**387**
	Through-Right		1							1				1				1	
	Right	129	0	129	0	129	129	0	135	0	135	0	135	0	135	0	135	0	135
	Left-Through-Right		0							0				0				0	
	Left-Right		0							0				0				0	
SOUTHBOUND	Left	561	1	**561**	0	561	**561**	0	587	1	**587**	0	587	1	**587**	0	587	1	**587**
	Left-Through		0							0				0				0	
	Through	692	2	346	0	692	346	8	732	2	366	0	732	2	366	0	732	2	366
	Through-Right		0							0				0				0	
	Right	0	0	0	0	0	0	0	0	0	0	0	0	0	0	0	0	0	0
	Left-Through-Right		0							0				0				0	
	Left-Right		0							0				0				0	
EASTBOUND	Left	0	0	0	0	0	0	0	0	0	0	0	0	0	0	0	0	0	0
	Left-Through		0							0				0				0	
	Through	0	0	**0**	0	0	**0**	0	0	0	**0**	0	0	0	**0**	0	0	0	**0**
	Through-Right		0							0				0				0	
	Right	0	0	0	0	0	0	0	0	0	0	0	0	0	0	0	0	0	0
	Left-Through-Right		0							0				0				0	
	Left-Right		0							0				0				0	
WESTBOUND	Left	22	1	**22**	0	22	**22**	0	23	1	**23**	0	23	1	**23**	0	23	1	**23**
	Left-Through		0							0				0				0	
	Through	0	0	0	0	0	0	0	0	0	0	0	0	0	0	0	0	0	0
	Through-Right		0							0				0				0	
	Right	93	1	0	30	123	0	0	97	1	0	30	127	1	0	0	127	1	0
	Left-Through-Right		0							0				0				0	
	Left-Right		0							0				0				0	
CRITICAL VOLUMES		*North-South:*		926	*North-South:*		926	*North-South:*			974	*North-South:*			974	*North-South:*			974
		East-West:		22	*East-West:*		22	*East-West:*			23	*East-West:*			23	*East-West:*			23
		SUM:		948	*SUM:*		948	*SUM:*			997	*SUM:*			997	*SUM:*			997
VOLUME/CAPACITY *(V/C)* RATIO:				0.790			0.790				0.831				0.831				0.831
V/C LESS ATSAC/ATCS ADJUSTMENT:				0.790			0.790				0.831				0.831				0.831
LEVEL OF SERVICE (LOS):				C			C				D				D				D

REMARKS: Alt. Route 4: Using only Cal-Mat Pit

Version: 1i Beta; 8/4/2011

PROJECT IMPACT

Change in *v/c* due to project:	0.000	Δ*v/c* after mitigation:	0.000
Significant impacted?	NO	Fully mitigated?	N/A

Level of Service Workheet
(Circular 212 Method)

I/S #:	North-South Street:	Laurel Canyon Boulevard	Year of Count:	2015	Ambient Growth: (%):	1.5	Conducted by:	City Traffic Counters	Date:	4/28/2015
CMA9	East-West Street:	I-5 Freeway SB Ramps	Projection Year:	2018	Peak Hour:	Mid-Day	Reviewed by:		Project:	Pacoima Reservoir Project/1-13-4

No. of Phases				0				0				0				0				0	
Opposed Ø'ing: N/S-1, E/W-2 or Both-3?				0				0				0				0				0	
Right Turns: FREE-1, NRTOR-2 or OLA-3?	NB--	0	SB--	0	NB--	0	SB--	0	NB--	0	SB--	0	NB--	0	SB--	0	NB--	0	SB--	0	
	EB--	0	WB--	0	EB--	0	WB--	0	EB--	0	WB--	0	EB--	0	WB--	0	EB--	0	WB--	0	
ATSAC-1 or ATSAC+ATCS-2?				0				0				0				0				0	
Override Capacity				1200				1200				1200				1200				1200	

	MOVEMENT	EXISTING CONDITION			EXISTING PLUS PROJECT			FUTURE CONDITION W/O PROJECT				FUTURE CONDITION W/ PROJECT				FUTURE W/ PROJECT W/ MITIGATION			
		Volume	No. of Lanes	Lane Volume	Project Traffic	Total Volume	Lane Volume	Added Volume	Total Volume	No. of Lanes	Lane Volume	Added Volume	Total Volume	No. of Lanes	Lane Volume	Added Volume	Total Volume	No. of Lanes	Lane Volume
NORTHBOUND	Left	0	0	0	0	0	0	0	0	0	0	0	0	0	0	0	0	0	0
	Left-Through		0							0				0				0	
	Through	467	1	**265**	0	467	**265**	1	489	1	**278**	0	489	1	**278**	0	489	1	**278**
	Through-Right		1							1				1				1	
	Right	63	0	63	0	63	63	0	66	0	66	0	66	0	66	0	66	0	66
	Left-Through-Right		0							0				0				0	
	Left-Right		0							0				0				0	
SOUTHBOUND	Left	253	1	**253**	0	253	**253**	0	265	1	**265**	0	265	1	**265**	0	265	1	**265**
	Left-Through		0							0				0				0	
	Through	420	2	210	0	420	210	1	440	2	220	0	440	2	220	0	440	2	220
	Through-Right		0							0				0				0	
	Right	0	0	0	0	0	0	0	0	0	0	0	0	0	0	0	0	0	0
	Left-Through-Right		0							0				0				0	
	Left-Right		0							0				0				0	
EASTBOUND	Left	0	0	0	0	0	0	0	0	0	0	0	0	0	0	0	0	0	0
	Left-Through		0							0				0				0	
	Through	0	0	**0**	0	0	**0**	0	0	0	**0**	0	0	0	**0**	0	0	0	**0**
	Through-Right		0							0				0				0	
	Right	0	0	0	0	0	0	0	0	0	0	0	0	0	0	0	0	0	0
	Left-Through-Right		0							0				0				0	
	Left-Right		0							0				0				0	
WESTBOUND	Left	52	1	**52**	0	52	**52**	0	54	1	**54**	0	54	1	**54**	0	54	1	**54**
	Left-Through		0							0				0				0	
	Through	0	0	0	0	0	0	0	0	0	0	0	0	0	0	0	0	0	0
	Through-Right		0							0				0				0	
	Right	141	1	15	30	171	45	0	147	1	15	30	177	1	45	0	177	1	45
	Left-Through-Right		0							0				0				0	
	Left-Right		0							0				0				0	
CRITICAL VOLUMES		*North-South:*		518	*North-South:*		518	*North-South:*			543	*North-South:*			543	*North-South:*			543
		East-West:		52	*East-West:*		52	*East-West:*			54	*East-West:*			54	*East-West:*			54
		SUM:		570	*SUM:*		570	*SUM:*			597	*SUM:*			597	*SUM:*			597
VOLUME/CAPACITY *(V/C)* RATIO:				0.475			0.475				0.498				0.498				0.498
V/C LESS ATSAC/ATCS ADJUSTMENT:				0.475			0.475				0.498				0.498				0.498
LEVEL OF SERVICE (LOS):				A			A				A				A				A

REMARKS: Alt. Route 4: Using only Cal-Mat Pit

Version: 1i Beta; 8/4/2011

PROJECT IMPACT

Change in *v/c* due to project:	0.000	Δ*v/c* after mitigation:	0.000
Significant impacted?	NO	Fully mitigated?	N/A

Level of Service Workheet
(Circular 212 Method)

I/S #:	North-South Street:	Laurel Canyon Boulevard	Year of Count:	2015	Ambient Growth: (%):	1.5	Conducted by:	City Traffic Counters	Date:	4/28/2015
CMA9	East-West Street:	I-5 Freeway SB Ramps	Projection Year:	2018	Peak Hour:	PM	Reviewed by:		Project:	Pacoima Reservoir Project/1-13-4

No. of Phases				0				0				0				0				0			0
Opposed Ø'ing: N/S-1, E/W-2 or Both-3?				0				0				0				0				0			0
Right Turns: FREE-1, NRTOR-2 or OLA-3?	NB--	0	SB--	0	NB--	0	SB--	0	NB--	0	SB--	0	NB--	0	SB--	0	NB--	0	SB--	0	NB--	0	SB-- 0
	EB--	0	WB--	0	EB--	0	WB--	0	EB--	0	WB--	0	EB--	0	WB--	0	EB--	0	WB--	0	EB--	0	WB-- 0
ATSAC-1 or ATSAC+ATCS-2?				0				0				0				0				0			0
Override Capacity				1200				1200				1200				1200				1200			1200

MOVEMENT		EXISTING CONDITION			EXISTING PLUS PROJECT			FUTURE CONDITION W/O PROJECT				FUTURE CONDITION W/ PROJECT				FUTURE W/ PROJECT W/ MITIGATION			
		Volume	No. of Lanes	Lane Volume	Project Traffic	Total Volume	Lane Volume	Added Volume	Total Volume	No. of Lanes	Lane Volume	Added Volume	Total Volume	No. of Lanes	Lane Volume	Added Volume	Total Volume	No. of Lanes	Lane Volume
NORTHBOUND	Left	0	0	0	0	0	0	0	0	0	0	0	0	0	0	0	0	0	0
	Left-Through		0							0				0				0	
	Through	1026	1	**538**	0	1026	**538**	4	1077	1	**565**	0	1077	1	**565**	0	1077	1	**565**
	Through-Right		1							1				1				1	
	Right	50	0	50	0	50	50	0	52	0	52	0	52	0	52	0	52	0	52
	Left-Through-Right		0							0				0				0	
	Left-Right		0							0				0				0	
SOUTHBOUND	Left	391	1	**391**	0	391	**391**	0	409	1	**409**	0	409	1	**409**	0	409	1	**409**
	Left-Through		0							0				0				0	
	Through	564	2	282	0	564	282	6	596	2	298	0	596	2	298	0	596	2	298
	Through-Right		0							0				0				0	
	Right	0	0	0	0	0	0	0	0	0	0	0	0	0	0	0	0	0	0
	Left-Through-Right		0							0				0				0	
	Left-Right		0							0				0				0	
EASTBOUND	Left	0	0	0	0	0	**0**	0	0	0	0	0	0	0	**0**	0	0	0	**0**
	Left-Through		0							0				0				0	
	Through	0	0	**0**	0	0	0	0	0	0	**0**	0	0	0	0	0	0	0	0
	Through-Right		0							0				0				0	
	Right	0	0	0	0	0	0	0	0	0	0	0	0	0	0	0	0	0	0
	Left-Through-Right		0							0				0				0	
	Left-Right		0							0				0				0	
WESTBOUND	Left	37	1	**37**	0	37	37	0	39	1	**39**	0	39	1	39	0	39	1	39
	Left-Through		0							0				0				0	
	Through	0	0	0	0	0	0	0	0	0	0	0	0	0	0	0	0	0	0
	Through-Right		0							0				0				0	
	Right	212	1	17	30	242	**47**	0	222	1	18	30	252	1	**48**	0	252	1	**48**
	Left-Through-Right		0							0				0				0	
	Left-Right		0							0				0				0	
CRITICAL VOLUMES		*North-South:*		929	*North-South:*		929	*North-South:*			974	*North-South:*			974	*North-South:*			974
		East-West:		37	*East-West:*		47	*East-West:*			39	*East-West:*			48	*East-West:*			48
		SUM:		966	*SUM:*		976	*SUM:*			1013	*SUM:*			1022	*SUM:*			1022
VOLUME/CAPACITY *(V/C)* RATIO:				0.805			0.813				0.844				0.852				0.852
V/C LESS ATSAC/ATCS ADJUSTMENT:				0.805			0.813				0.844				0.852				0.852
LEVEL OF SERVICE (LOS):				D			D				D				D				D

REMARKS: Alt. Route 4: Using only Cal-Mat Pit

Version: 1i Beta; 8/4/2011

PROJECT IMPACT

Change in *v/c* due to project:	0.008	Δ*v/c* after mitigation:	0.008
Significant impacted?	NO	Fully mitigated?	N/A

Level of Service Workheet
(Circular 212 Method)

I/S #:	North-South Street:	I-5 Freeway NB On-Ramp-Rincon Ave	Year of Count:	2015	Ambient Growth: (%):	1.5	Conducted by:	City Traffic Counters	Date:	4/28/2015
CMA10	East-West Street:	Sheldon Street	Projection Year:	2018	Peak Hour:	AM	Reviewed by:		Project:	Pacoima Reservoir Project/1-13-4

	Existing Condition	Existing Plus Project	Future Condition W/O Project	Future Condition W/ Project	Future W/ Project W/ Mitigation
No. of Phases	0	0	0	0	0
Opposed Ø'ing: N/S-1, E/W-2 or Both-3?	0	0	0	0	0
Right Turns: FREE-1, NRTOR-2 or OLA-3?	NB-- 0 SB-- 0	NB-- 0 SB-- 0	NB-- 0 SB-- 0	NB-- 0 SB-- 0	NB-- 0 SB-- 0
	EB-- 0 WB-- 0	EB-- 0 WB-- 0	EB-- 0 WB-- 0	EB-- 0 WB-- 0	EB-- 0 WB-- 0
ATSAC-1 or ATSAC+ATCS-2?	0	0	0	0	0
Override Capacity	1200	#####	1200	1200	1200

	MOVEMENT	Existing Condition Volume	No. of Lanes	Lane Volume	Existing Plus Project Project Traffic	Total Volume	Lane Volume	Future Condition W/O Project Added Volume	Total Volume	No. of Lanes	Lane Volume	Future Condition W/ Project Added Volume	Total Volume	No. of Lanes	Lane Volume	Future W/ Project W/ Mitigation Added Volume	Total Volume	No. of Lanes	Lane Volume
NORTHBOUND	Left	0	0	**0**	0	0	**0**	0	0	0	**0**	0	0	0	**0**	0	0	0	**0**
	Left-Through		0							0				0				0	
	Through	0	0	0	0	0	0	0	0	0	0	0	0	0	0	0	0	0	0
	Through-Right		0							0				0				0	
	Right	0	0	0	0	0	0	0	0	0	0	0	0	0	0	0	0	0	0
	Left-Through-Right		0							0				0				0	
	Left-Right		0							0				0				0	
SOUTHBOUND	Left	8	0	8	0	8	8	0	8	0	8	0	8	0	8	0	8	0	8
	Left-Through		0							0				0				0	
	Through	2	0	**42**	0	2	**42**	0	2	0	**43**	0	2	0	**43**	0	2	0	**43**
	Through-Right		0							0				0				0	
	Right	32	0	0	0	32	0	0	33	0	0	0	33	0	0	0	33	0	0
	Left-Through-Right		1							1				1				1	
	Left-Right		0							0				0				0	
EASTBOUND	Left	33	1	33	0	33	33	0	35	1	35	0	35	1	35	0	35	1	35
	Left-Through		0							0				0				0	
	Through	962	1	**577**	30	992	**592**	0	1006	1	**604**	30	1036	1	**619**	0	1036	1	**619**
	Through-Right		1							1				1				1	
	Right	192	0	192	0	192	192	0	201	0	201	0	201	0	201	0	201	0	201
	Left-Through-Right		0							0				0				0	
	Left-Right		0							0				0				0	
WESTBOUND	Left	201	1	**201**	30	231	**231**	0	210	1	**210**	30	240	1	**240**	0	240	1	**240**
	Left-Through		0							0				0				0	
	Through	1040	1	534	0	1040	534	0	1088	1	559	0	1088	1	559	0	1088	1	559
	Through-Right		1							1				1				1	
	Right	28	0	28	0	28	28	0	29	0	29	0	29	0	29	0	29	0	29
	Left-Through-Right		0							0				0				0	
	Left-Right		0							0				0				0	
CRITICAL VOLUMES		North-South:		42	North-South:		42	North-South:			43	North-South:			43	North-South:			43
		East-West:		778	East-West:		823	East-West:			814	East-West:			859	East-West:			859
		SUM:		820	SUM:		865	SUM:			857	SUM:			902	SUM:			902
VOLUME/CAPACITY (V/C) RATIO:				0.683			0.721				0.714				0.752				0.752
V/C LESS ATSAC/ATCS ADJUSTMENT:				0.683			0.721				0.714				0.752				0.752
LEVEL OF SERVICE (LOS):				**B**			**C**				**C**				**C**				**C**

REMARKS: Alt. Route 4: Using only Cal-Mat Pit

Version: 1i Beta; 8/4/2011

PROJECT IMPACT

Change in *v/c* due to project:	0.038	Δ*v/c* after mitigation:	0.038
Significant impacted?	NO	Fully mitigated?	N/A

Level of Service Workheet
(Circular 212 Method)

I/S #:	North-South Street:	I-5 Freeway NB On-Ramp-Rincon Ave	Year of Count:	2015	Ambient Growth: (%):	1.5	Conducted by:	City Traffic Counters	Date:	4/28/2015
CMA10	East-West Street:	Sheldon Street	Projection Year:	2018	Peak Hour:	Mid-Day	Reviewed by:		Project:	Pacoima Reservoir Project/1-13-4

	Existing Condition	Existing Plus Project	Future Condition W/O Project	Future Condition W/ Project	Future W/ Project W/ Mitigation
No. of Phases	0	0	0	0	0
Opposed Ø'ing: N/S-1, E/W-2 or Both-3?	0	0	0	0	0
Right Turns: FREE-1, NRTOR-2 or OLA-3?	NB-- 0 SB-- 0	NB-- 0 SB-- 0	NB-- 0 SB-- 0	NB-- 0 SB-- 0	NB-- 0 SB-- 0
	EB-- 0 WB-- 0	EB-- 0 WB-- 0	EB-- 0 WB-- 0	EB-- 0 WB-- 0	EB-- 0 WB-- 0
ATSAC-1 or ATSAC+ATCS-2?	0	0	0	0	0
Override Capacity	1200	#####	1200	1200	1200

	MOVEMENT	Existing Condition Volume	No. of Lanes	Lane Volume	Existing Plus Project Project Traffic	Total Volume	Lane Volume	Future Condition W/O Project Added Volume	Total Volume	No. of Lanes	Lane Volume	Future Condition W/ Project Added Volume	Total Volume	No. of Lanes	Lane Volume	Future W/ Project W/ Mitigation Added Volume	Total Volume	No. of Lanes	Lane Volume
NORTHBOUND	Left	0	0	**0**	0	0	**0**	0	0	0	**0**	0	0	0	**0**	0	0	0	**0**
	Left-Through		0							0				0				0	
	Through	0	0	0	0	0	0	0	0	0	0	0	0	0	0	0	0	0	0
	Through-Right		0							0				0				0	
	Right	0	0	0	0	0	0	0	0	0	0	0	0	0	0	0	0	0	0
	Left-Through-Right		0							0				0				0	
	Left-Right		0							0				0				0	
SOUTHBOUND	Left	12	0	12	0	12	12	0	13	0	13	0	13	0	13	0	13	0	13
	Left-Through		0							0				0				0	
	Through	10	0	**53**	0	10	**53**	0	10	0	**55**	0	10	0	**55**	0	10	0	**55**
	Through-Right		0							0				0				0	
	Right	31	0	0	0	31	0	0	32	0	0	0	32	0	0	0	32	0	0
	Left-Through-Right		1							1				1				1	
	Left-Right		0							0				0				0	
EASTBOUND	Left	22	1	22	0	22	22	0	23	1	23	0	23	1	23	0	23	1	23
	Left-Through		0							0				0				0	
	Through	616	1	**381**	30	646	**396**	0	644	1	**398**	30	674	1	**413**	0	674	1	**413**
	Through-Right		1							1				1				1	
	Right	145	0	145	0	145	145	0	152	0	152	0	152	0	152	0	152	0	152
	Left-Through-Right		0							0				0				0	
	Left-Right		0							0				0				0	
WESTBOUND	Left	147	1	**147**	30	177	**177**	0	154	1	**154**	30	184	1	**184**	0	184	1	**184**
	Left-Through		0							0				0				0	
	Through	534	1	276	0	534	276	0	558	1	288	0	558	1	288	0	558	1	288
	Through-Right		1							1				1				1	
	Right	17	0	17	0	17	17	0	18	0	18	0	18	0	18	0	18	0	18
	Left-Through-Right		0							0				0				0	
	Left-Right		0							0				0				0	
CRITICAL VOLUMES		North-South:		53	North-South:		53	North-South:			55	North-South:			55	North-South:			55
		East-West:		528	East-West:		573	East-West:			552	East-West:			597	East-West:			597
		SUM:		581	SUM:		626	SUM:			607	SUM:			652	SUM:			652
VOLUME/CAPACITY (V/C) RATIO:				0.484			0.522				0.506				0.543				0.543
V/C LESS ATSAC/ATCS ADJUSTMENT:				0.484			0.522				0.506				0.543				0.543
LEVEL OF SERVICE (LOS):				A			A				A				A				A

REMARKS: Alt. Route 4: Using only Cal-Mat Pit

Version: 1i Beta; 8/4/2011

PROJECT IMPACT

Change in *v/c* due to project:	0.037	Δ*v/c* after mitigation:	0.037
Significant impacted?	NO	Fully mitigated?	N/A

Level of Service Workheet
(Circular 212 Method)

I/S #:	North-South Street:	I-5 Freeway NB On-Ramp-Rincon Av	Year of Count:	2015	Ambient Growth: (%):	1.5	Conducted by:	City Traffic Counters	Date:	4/28/2015
CMA10	East-West Street:	Sheldon Street	Projection Year:	2018	Peak Hour:	PM	Reviewed by:		Project:	Pacoima Reservoir Project/1-13-4

	Existing Condition	Existing Plus Project	Future Condition W/O Project	Future Condition W/ Project	Future W/ Project W/ Mitigation
No. of Phases	0	0	0	0	0
Opposed Ø'ing: N/S-1, E/W-2 or Both-3?	0	0	0	0	0
Right Turns: FREE-1, NRTOR-2 or OLA-3?	NB-- 0 SB-- 0	NB-- 0 SB-- 0	NB-- 0 SB-- 0	NB-- 0 SB-- 0	NB-- 0 SB-- 0
	EB-- 0 WB-- 0	EB-- 0 WB-- 0	EB-- 0 WB-- 0	EB-- 0 WB-- 0	EB-- 0 WB-- 0
ATSAC-1 or ATSAC+ATCS-2?	0	0	0	0	0
Override Capacity	1200	1200	1200	1200	1200

	MOVEMENT	Existing Condition Volume	No. of Lanes	Lane Volume	Existing Plus Project Project Traffic	Total Volume	Lane Volume	Future Condition W/O Project Added Volume	Total Volume	No. of Lanes	Lane Volume	Future Condition W/ Project Added Volume	Total Volume	No. of Lanes	Lane Volume	Future W/ Project W/ Mitigation Added Volume	Total Volume	No. of Lanes	Lane Volume
NORTHBOUND	Left	0	0	**0**	0	0	**0**	0	0	0	**0**	0	0	0	**0**	0	0	0	**0**
	Left-Through		0							0				0				0	
	Through	0	0	0	0	0	0	0	0	0	0	0	0	0	0	0	0	0	0
	Through-Right		0							0				0				0	
	Right	0	0	0	0	0	0	0	0	0	0	0	0	0	0	0	0	0	0
	Left-Through-Right		0							0				0				0	
	Left-Right		0							0				0				0	
SOUTHBOUND	Left	10	0	10	0	10	10	0	10	0	10	0	10	0	10	0	10	0	10
	Left-Through		0							0				0				0	
	Through	4	0	**43**	0	4	**43**	0	4	0	**44**	0	4	0	**44**	0	4	0	**44**
	Through-Right		0							0				0				0	
	Right	29	0	0	0	29	0	0	30	0	0	0	30	0	0	0	30	0	0
	Left-Through-Right		1							1				1				1	
	Left-Right		0							0				0				0	
EASTBOUND	Left	42	1	42	0	42	42	0	44	1	44	0	44	1	44	0	44	1	44
	Left-Through		0							0				0				0	
	Through	970	1	**597**	30	1000	**612**	0	1014	1	**624**	30	1044	1	**639**	0	1044	1	**639**
	Through-Right		1							1				1				1	
	Right	223	0	223	0	223	223	0	233	0	233	0	233	0	233	0	233	0	233
	Left-Through-Right		0							0				0				0	
	Left-Right		0							0				0				0	
WESTBOUND	Left	131	1	**131**	30	161	**161**	0	137	1	**137**	30	167	1	**167**	0	167	1	**167**
	Left-Through		0							0				0				0	
	Through	817	1	415	0	817	415	0	854	1	434	0	854	1	434	0	854	1	434
	Through-Right		1							1				1				1	
	Right	13	0	13	0	13	13	0	14	0	14	0	14	0	14	0	14	0	14
	Left-Through-Right		0							0				0				0	
	Left-Right		0							0				0				0	
CRITICAL VOLUMES		North-South:		43	North-South:		43	North-South:			44	North-South:			44	North-South:			44
		East-West:		728	East-West:		773	East-West:			761	East-West:			806	East-West:			806
		SUM:		771	SUM:		816	SUM:			805	SUM:			850	SUM:			850
VOLUME/CAPACITY (V/C) RATIO:				0.643			0.680				0.671				0.708				0.708
V/C LESS ATSAC/ATCS ADJUSTMENT:				0.643			0.680				0.671				0.708				0.708
LEVEL OF SERVICE (LOS):				**B**			**B**				**B**				**C**				**C**

REMARKS: Alt. Route 4: Using only Cal-Mat Pit

Version: 1i Beta; 8/4/2011

PROJECT IMPACT

Change in *v/c* due to project:	0.037	Δ*v/c* after mitigation:	0.037
Significant impacted?	NO	Fully mitigated?	N/A

Level of Service Workheet
(Circular 212 Method)

I/S #:	North-South Street:	Haddon Avenue	Year of Count:	2015	Ambient Growth: (%):	1.5	Conducted by:	City Traffic Counters	Date:	4/28/2015
CMA11	East-West Street:	Sheldon Street	Projection Year:	2018	Peak Hour:	AM	Reviewed by:		Project:	Pacoima Reservoir Project/1-13-4

No. of Phases				2				2				2				2				2			2
Opposed Ø'ing: N/S-1, E/W-2 or Both-3?				0				0				0				0				0			0
Right Turns: FREE-1, NRTOR-2 or OLA-3?	NB--	0	SB--	0	NB--	0	SB--	0	NB--	0	SB--	0	NB--	0	SB--	0	NB--	0	SB--	0			
	EB--	0	WB--	0	EB--	0	WB--	0	EB--	0	WB--	0	EB--	0	WB--	0	EB--	0	WB--	0			
ATSAC-1 or ATSAC+ATCS-2?				2				2				2				2				2			2
Override Capacity				0				0				0				0				0			0

	MOVEMENT	EXISTING CONDITION			EXISTING PLUS PROJECT			FUTURE CONDITION W/O PROJECT				FUTURE CONDITION W/ PROJECT				FUTURE W/ PROJECT W/ MITIGATION			
		Volume	No. of Lanes	Lane Volume	Project Traffic	Total Volume	Lane Volume	Added Volume	Total Volume	No. of Lanes	Lane Volume	Added Volume	Total Volume	No. of Lanes	Lane Volume	Added Volume	Total Volume	No. of Lanes	Lane Volume
NORTHBOUND	Left	202	0	202	0	202	202	0	211	0	211	0	211	0	211	0	211	0	211
	Left-Through		0							0				0				0	
	Through	29	0	**282**	0	29	**282**	0	30	0	**294**	0	30	0	**294**	0	30	0	**294**
	Through-Right		0							0				0				0	
	Right	51	0	0	0	51	0	0	53	0	0	0	53	0	0	0	53	0	0
	Left-Through-Right		1							1				1				1	
	Left-Right		0							0				0				0	
SOUTHBOUND	Left	31	0	**31**	0	31	**31**	0	32	0	**32**	0	32	0	**32**	0	32	0	**32**
	Left-Through		0							0				0				0	
	Through	40	0	103	0	40	103	0	42	0	107	0	42	0	107	0	42	0	107
	Through-Right		0							0				0				0	
	Right	32	0	0	0	32	0	0	33	0	0	0	33	0	0	0	33	0	0
	Left-Through-Right		1							1				1				1	
	Left-Right		0							0				0				0	
EASTBOUND	Left	12	1	**12**	0	12	**12**	0	13	1	**13**	0	13	1	**13**	0	13	1	**13**
	Left-Through		0							0				0				0	
	Through	747	1	463	30	777	478	0	781	1	484	30	811	1	499	0	811	1	499
	Through-Right		1							1				1				1	
	Right	179	0	179	0	179	179	0	187	0	187	0	187	0	187	0	187	0	187
	Left-Through-Right		0							0				0				0	
	Left-Right		0							0				0				0	
WESTBOUND	Left	38	1	38	0	38	38	0	40	1	40	0	40	1	40	0	40	1	40
	Left-Through		0							0				0				0	
	Through	1036	1	**524**	30	1066	**539**	0	1083	1	**548**	30	1113	1	**563**	0	1113	1	**563**
	Through-Right		1							1				1				1	
	Right	11	0	11	0	11	11	0	12	0	12	0	12	0	12	0	12	0	12
	Left-Through-Right		0							0				0				0	
	Left-Right		0							0				0				0	
CRITICAL VOLUMES		*North-South:*		313	*North-South:*		313	*North-South:*			326	*North-South:*			326	*North-South:*			326
		East-West:		536	*East-West:*		551	*East-West:*			561	*East-West:*			576	*East-West:*			576
		SUM:		849	*SUM:*		864	*SUM:*			887	*SUM:*			902	*SUM:*			902
VOLUME/CAPACITY *(V/C)* RATIO:				0.566			0.576				0.591				0.601				0.601
V/C LESS ATSAC/ATCS ADJUSTMENT:				**0.466**			**0.476**				**0.491**				**0.501**				**0.501**
LEVEL OF SERVICE (LOS):				**A**			**A**				**A**				**A**				**A**

REMARKS: Alt. Route 4: Using only Cal-Mat Pit

Version: 1i Beta; 8/4/2011

PROJECT IMPACT

Change in *v/c* due to project:	0.010	Δ*v/c* after mitigation:	0.010
Significant impacted?	NO	Fully mitigated?	N/A

Level of Service Workheet
(Circular 212 Method)

I/S #:	North-South Street:	Haddon Avenue	Year of Count:	2015	Ambient Growth: (%):	1.5	Conducted by:	City Traffic Counters	Date:	4/28/2015
CMA11	East-West Street:	Sheldon Street	Projection Year:	2018	Peak Hour:	Mid-Day	Reviewed by:		Project:	Pacoima Reservoir Project/1-13-4

No. of Phases				2				2				2				2				2			2
Opposed Ø'ing: N/S-1, E/W-2 or Both-3?				0				0				0				0				0			0
Right Turns: FREE-1, NRTOR-2 or OLA-3?	NB--	0	SB--	0	NB--	0	SB--	0	NB--	0	SB--	0	NB--	0	SB--	0	NB--	0	SB--	0			
	EB--	0	WB--	0	EB--	0	WB--	0	EB--	0	WB--	0	EB--	0	WB--	0	EB--	0	WB--	0			
ATSAC-1 or ATSAC+ATCS-2?				2				2				2				2				2			2
Override Capacity				0				0				0				0				0			0

	MOVEMENT	EXISTING CONDITION			EXISTING PLUS PROJECT			FUTURE CONDITION W/O PROJECT				FUTURE CONDITION W/ PROJECT				FUTURE W/ PROJECT W/ MITIGATION			
		Volume	No. of Lanes	Lane Volume	Project Traffic	Total Volume	Lane Volume	Added Volume	Total Volume	No. of Lanes	Lane Volume	Added Volume	Total Volume	No. of Lanes	Lane Volume	Added Volume	Total Volume	No. of Lanes	Lane Volume
NORTHBOUND	Left	56	0	**56**	0	56	**56**	0	59	0	**59**	0	59	0	**59**	0	59	0	**59**
	Left-Through		0							0				0				0	
	Through	0	0	61	0	0	61	0	0	0	64	0	0	0	64	0	0	0	64
	Through-Right		0							0				0				0	
	Right	5	0	0	0	5	0	0	5	0	0	0	5	0	0	0	5	0	0
	Left-Through-Right		1							1				1				1	
	Left-Right		0							0				0				0	
SOUTHBOUND	Left	10	0	10	0	10	10	0	10	0	10	0	10	0	10	0	10	0	10
	Left-Through		0							0				0				0	
	Through	2	0	**28**	0	2	**28**	0	2	0	**29**	0	2	0	**29**	0	2	0	**29**
	Through-Right		0							0				0				0	
	Right	16	0	0	0	16	0	0	17	0	0	0	17	0	0	0	17	0	0
	Left-Through-Right		1							1				1				1	
	Left-Right		0							0				0				0	
EASTBOUND	Left	8	1	**8**	0	8	**8**	0	8	1	**8**	0	8	1	**8**	0	8	1	**8**
	Left-Through		0							0				0				0	
	Through	599	1	316	30	629	331	0	626	1	330	30	656	1	345	0	656	1	345
	Through-Right		1							1				1				1	
	Right	32	0	32	0	32	32	0	33	0	33	0	33	0	33	0	33	0	33
	Left-Through-Right		0							0				0				0	
	Left-Right		0							0				0				0	
WESTBOUND	Left	6	1	6	0	6	6	0	6	1	6	0	6	1	6	0	6	1	6
	Left-Through		0							0				0				0	
	Through	632	1	**319**	30	662	**334**	0	661	1	**334**	30	691	1	**349**	0	691	1	**349**
	Through-Right		1							1				1				1	
	Right	6	0	6	0	6	6	0	6	0	6	0	6	0	6	0	6	0	6
	Left-Through-Right		0							0				0				0	
	Left-Right		0							0				0				0	
CRITICAL VOLUMES		*North-South:*		84	*North-South:*		84	*North-South:*			88	*North-South:*			88	*North-South:*			88
		East-West:		327	*East-West:*		342	*East-West:*			342	*East-West:*			357	*East-West:*			357
		SUM:		411	*SUM:*		426	*SUM:*			430	*SUM:*			445	*SUM:*			445
VOLUME/CAPACITY *(V/C)* RATIO:				0.274			0.284				0.287				0.297				0.297
V/C LESS ATSAC/ATCS ADJUSTMENT:				**0.174**			**0.184**				**0.187**				**0.197**				**0.197**
LEVEL OF SERVICE (LOS):				**A**			**A**				**A**				**A**				**A**

REMARKS: Alt. Route 4: Using only Cal-Mat Pit

Version: 1i Beta; 8/4/2011

PROJECT IMPACT

Change in *v/c* due to project:	0.010	Δ*v/c* after mitigation:	0.010
Significant impacted?	NO	Fully mitigated?	N/A

Level of Service Workheet
(Circular 212 Method)

I/S #:	North-South Street:	Haddon Avenue	Year of Count:	2015	Ambient Growth: (%):	1.5	Conducted by:	City Traffic Counters	Date:	4/28/2015
CMA11	East-West Street:	Sheldon Street	Projection Year:	2018	Peak Hour:	PM	Reviewed by:		Project:	Pacoima Reservoir Project/1-13-4

	Existing Condition	Existing Plus Project	Future Condition W/O Project	Future Condition W/ Project	Future W/ Project W/ Mitigation
No. of Phases	2	2	2	2	2
Opposed Ø'ing: N/S-1, E/W-2 or Both-3?	0	0	0	0	0
Right Turns: FREE-1, NRTOR-2 or OLA-3?	NB-- 0 SB-- 0 EB-- 0 WB-- 0	NB-- 0 SB-- 0 EB-- 0 WB-- 0	NB-- 0 SB-- 0 EB-- 0 WB-- 0	NB-- 0 SB-- 0 EB-- 0 WB-- 0	NB-- 0 SB-- 0 EB-- 0 WB-- 0
ATSAC-1 or ATSAC+ATCS-2?	2	2	2	2	2
Override Capacity	0	0	0	0	0

	MOVEMENT	Existing Condition Volume	No. of Lanes	Lane Volume	Existing Plus Project Project Traffic	Total Volume	Lane Volume	Future Condition W/O Project Added Volume	Total Volume	No. of Lanes	Lane Volume	Future Condition W/ Project Added Volume	Total Volume	No. of Lanes	Lane Volume	Future W/ Project W/ Mitigation Added Volume	Total Volume	No. of Lanes	Lane Volume
NORTHBOUND	Left	99	0	**99**	0	99	**99**	0	104	0	**104**	0	104	0	**104**	0	104	0	**104**
	Left-Through		0							0				0				0	
	Through	10	0	125	0	10	125	0	10	0	131	0	10	0	131	0	10	0	131
	Through-Right		0							0				0				0	
	Right	16	0	0	0	16	0	0	17	0	0	0	17	0	0	0	17	0	0
	Left-Through-Right		1							1				1				1	
	Left-Right		0							0				0				0	
SOUTHBOUND	Left	8	0	8	0	8	8	0	8	0	8	0	8	0	8	0	8	0	8
	Left-Through		0							0				0				0	
	Through	11	0	**37**	0	11	**37**	0	12	0	**39**	0	12	0	**39**	0	12	0	**39**
	Through-Right		0							0				0				0	
	Right	18	0	0	0	18	0	0	19	0	0	0	19	0	0	0	19	0	0
	Left-Through-Right		1							1				1				1	
	Left-Right		0							0				0				0	
EASTBOUND	Left	11	1	11	0	11	11	0	12	1	12	0	12	1	12	0	12	1	12
	Left-Through		0							0				0				0	
	Through	944	1	**520**	30	974	**535**	0	987	1	**544**	30	1017	1	**559**	0	1017	1	**559**
	Through-Right		1							1				1				1	
	Right	96	0	96	0	96	96	0	100	0	100	0	100	0	100	0	100	0	100
	Left-Through-Right		0							0				0				0	
	Left-Right		0							0				0				0	
WESTBOUND	Left	4	1	**4**	0	4	**4**	0	4	1	**4**	0	4	1	**4**	0	4	1	**4**
	Left-Through		0							0				0				0	
	Through	843	1	424	30	873	439	0	882	1	444	30	912	1	459	0	912	1	459
	Through-Right		1							1				1				1	
	Right	5	0	5	0	5	5	0	5	0	5	0	5	0	5	0	5	0	5
	Left-Through-Right		0							0				0				0	
	Left-Right		0							0				0				0	
CRITICAL VOLUMES		North-South:		136	North-South:		136	North-South:			143	North-South:			143	North-South:			143
		East-West:		524	East-West:		539	East-West:			548	East-West:			563	East-West:			563
		SUM:		660	SUM:		675	SUM:			691	SUM:			706	SUM:			706
VOLUME/CAPACITY (V/C) RATIO:				0.440			0.450				0.461				0.471				0.471
V/C LESS ATSAC/ATCS ADJUSTMENT:				**0.340**			**0.350**				**0.361**				**0.371**				**0.371**
LEVEL OF SERVICE (LOS):				**A**			**A**				**A**				**A**				**A**

REMARKS: Alt. Route 4: Using only Cal-Mat Pit

Version: 1i Beta; 8/4/2011

PROJECT IMPACT

Change in *v/c* due to project:	0.010	Δ*v/c* after mitigation:	0.010
Significant impacted?	NO	Fully mitigated?	N/A

Level of Service Workheet
(Circular 212 Method)

I/S #:	North-South Street:	Telfair Avenue	Year of Count:	2015	Ambient Growth: (%):	1.5	Conducted by:	City Traffic Counters	Date:	4/28/2015
CMA12	East-West Street:	Sheldon Street	Projection Year:	2018	Peak Hour:	AM	Reviewed by:		Project:	Pacoima Reservoir Project/1-13-4

No. of Phases				2				2				2				2				2			
Opposed Ø'ing: N/S-1, E/W-2 or Both-3?				0				0				0				0				0			
Right Turns: FREE-1, NRTOR-2 or OLA-3?	NB--	0	SB--	0	NB--	0	SB--	0	NB--	0	SB--	0	NB--	0	SB--	0	NB--	0	SB--	0			
	EB--	0	WB--	0	EB--	0	WB--	0	EB--	0	WB--	0	EB--	0	WB--	0	EB--	0	WB--	0			
ATSAC-1 or ATSAC+ATCS-2?				2				2				2				2				2			
Override Capacity				0				0				0				0				0			

	MOVEMENT	EXISTING CONDITION			EXISTING PLUS PROJECT			FUTURE CONDITION W/O PROJECT				FUTURE CONDITION W/ PROJECT				FUTURE W/ PROJECT W/ MITIGATION			
		Volume	No. of Lanes	Lane Volume	Project Traffic	Total Volume	Lane Volume	Added Volume	Total Volume	No. of Lanes	Lane Volume	Added Volume	Total Volume	No. of Lanes	Lane Volume	Added Volume	Total Volume	No. of Lanes	Lane Volume
NORTHBOUND	Left	134	0	134	0	134	134	0	140	0	140	0	140	0	140	0	140	0	140
	Left-Through		0							0				0				0	
	Through	22	0	**217**	0	22	**217**	0	23	0	**227**	0	23	0	**227**	0	23	0	**227**
	Through-Right		0							0				0				0	
	Right	61	0	0	0	61	0	0	64	0	0	0	64	0	0	0	64	0	0
	Left-Through-Right		1							1				1				1	
	Left-Right		0							0				0				0	
SOUTHBOUND	Left	11	0	**11**	0	11	**11**	0	12	0	**12**	0	12	0	**12**	0	12	0	**12**
	Left-Through		0							0				0				0	
	Through	48	0	89	0	48	89	0	50	0	93	0	50	0	93	0	50	0	93
	Through-Right		0							0				0				0	
	Right	30	0	0	0	30	0	0	31	0	0	0	31	0	0	0	31	0	0
	Left-Through-Right		1							1				1				1	
	Left-Right		0							0				0				0	
EASTBOUND	Left	5	0	**5**	0	5	**5**	0	5	0	**5**	0	5	0	**5**	0	5	0	**5**
	Left-Through		1							1				1				1	
	Through	589	0	380	30	619	395	0	616	0	397	30	646	0	412	0	646	0	412
	Through-Right		1							1				1				1	
	Right	151	0	380	0	151	395	0	158	0	397	0	158	0	412	0	158	0	412
	Left-Through-Right		0							0				0				0	
	Left-Right		0							0				0				0	
WESTBOUND	Left	139	0	139	0	139	139	0	145	0	145	0	145	0	145	0	145	0	145
	Left-Through		1							1				1				1	
	Through	842	0	**715**	30	872	**730**	0	880	0	**746**	30	910	0	**761**	0	910	0	**761**
	Through-Right		1							1				1				1	
	Right	31	0	715	0	31	730	0	32	0	746	0	32	0	761	0	32	0	761
	Left-Through-Right		0							0				0				0	
	Left-Right		0							0				0				0	
CRITICAL VOLUMES			*North-South:*	228		*North-South:*	228		*North-South:*	239			*North-South:*	239			*North-South:*	239	
			East-West:	720		*East-West:*	735		*East-West:*	751			*East-West:*	766			*East-West:*	766	
			SUM:	948		*SUM:*	963		*SUM:*	990			*SUM:*	1005			*SUM:*	1005	
VOLUME/CAPACITY *(V/C)* RATIO:				0.632			0.642				0.660				0.670				0.670
V/C LESS ATSAC/ATCS ADJUSTMENT:				**0.532**			**0.542**				**0.560**				**0.570**				**0.570**
LEVEL OF SERVICE (LOS):				**A**			**A**				**A**				**A**				**A**

REMARKS: Alt. Route 4: Using only Cal-Mat Pit

Version: 1i Beta; 8/4/2011

PROJECT IMPACT

Change in *v/c* due to project:	0.010	Δ*v/c* after mitigation:	0.010
Significant impacted?	NO	Fully mitigated?	N/A

Level of Service Workheet
(Circular 212 Method)

I/S #:	North-South Street:	Telfair Avenue	Year of Count:	2015	Ambient Growth: (%):	1.5	Conducted by:	City Traffic Counters	Date:	4/28/2015
CMA12	East-West Street:	Sheldon Street	Projection Year:	2018	Peak Hour:	Mid-Day	Reviewed by:		Project:	Pacoima Reservoir Project/1-13-4

No. of Phases				2				2				2				2				2
Opposed Ø'ing: N/S-1, E/W-2 or Both-3?				0				0				0				0				0
Right Turns: FREE-1, NRTOR-2 or OLA-3?	NB-- 0	SB--		0	NB-- 0	SB--		0	NB-- 0	SB--		0	NB-- 0	SB--		0	NB-- 0	SB--		0
	EB-- 0	WB--		0	EB-- 0	WB--		0	EB-- 0	WB--		0	EB-- 0	WB--		0	EB-- 0	WB--		0
ATSAC-1 or ATSAC+ATCS-2?				2				2				2				2				2
Override Capacity				0				0				0				0				0

	MOVEMENT	EXISTING CONDITION			EXISTING PLUS PROJECT			FUTURE CONDITION W/O PROJECT				FUTURE CONDITION W/ PROJECT				FUTURE W/ PROJECT W/ MITIGATION			
		Volume	No. of Lanes	Lane Volume	Project Traffic	Total Volume	Lane Volume	Added Volume	Total Volume	No. of Lanes	Lane Volume	Added Volume	Total Volume	No. of Lanes	Lane Volume	Added Volume	Total Volume	No. of Lanes	Lane Volume
NORTHBOUND	Left	37	0	37	0	37	37	0	39	0	39	0	39	0	39	0	39	0	39
	Left-Through		0							0				0				0	
	Through	4	0	**59**	0	4	**59**	0	4	0	**62**	0	4	0	**62**	0	4	0	**62**
	Through-Right		0							0				0				0	
	Right	18	0	0	0	18	0	0	19	0	0	0	19	0	0	0	19	0	0
	Left-Through-Right		1							1				1				1	
	Left-Right		0							0				0				0	
SOUTHBOUND	Left	0	0	**0**	0	0	**0**	0	0	0	**0**	0	0	0	**0**	0	0	0	**0**
	Left-Through		0							0				0				0	
	Through	2	0	17	0	2	17	0	2	0	18	0	2	0	18	0	2	0	18
	Through-Right		0							0				0				0	
	Right	15	0	0	0	15	0	0	16	0	0	0	16	0	0	0	16	0	0
	Left-Through-Right		1							1				1				1	
	Left-Right		0							0				0				0	
EASTBOUND	Left	6	0	6	0	6	6	0	6	0	6	0	6	0	6	0	6	0	6
	Left-Through		1							1				1				1	
	Through	559	0	**302**	30	589	**317**	0	585	0	**315**	30	615	0	**330**	0	615	0	**330**
	Through-Right		1							1				1				1	
	Right	32	0	302	0	32	317	0	33	0	315	0	33	0	330	0	33	0	330
	Left-Through-Right		0							0				0				0	
	Left-Right		0							0				0				0	
WESTBOUND	Left	32	0	**32**	0	32	**32**	0	33	0	**33**	0	33	0	**33**	0	33	0	**33**
	Left-Through		1							1				1				1	
	Through	497	0	295	30	527	342	0	520	0	341	30	550	0	356	0	550	0	356
	Through-Right		1							1				1				1	
	Right	28	0	295	0	28	342	0	29	0	341	0	29	0	356	0	29	0	356
	Left-Through-Right		0							0				0				0	
	Left-Right		0							0				0				0	
CRITICAL VOLUMES		*North-South:*		59	*North-South:*		59	*North-South:*			62	*North-South:*			62	*North-South:*			62
		East-West:		334	*East-West:*		349	*East-West:*			348	*East-West:*			363	*East-West:*			363
		SUM:		393	*SUM:*		408	*SUM:*			410	*SUM:*			425	*SUM:*			425
VOLUME/CAPACITY *(V/C)* RATIO:				0.262			0.272				0.273				0.283				0.283
V/C LESS ATSAC/ATCS ADJUSTMENT:				**0.162**			**0.172**				**0.173**				**0.183**				**0.183**
LEVEL OF SERVICE (LOS):				**A**			**A**				**A**				**A**				**A**

REMARKS: Alt. Route 4: Using only Cal-Mat Pit

Version: 1i Beta; 8/4/2011

PROJECT IMPACT

Change in *v/c* due to project:	0.010	Δ*v/c* after mitigation:	0.010
Significant impacted?	NO	Fully mitigated?	N/A

Level of Service Workheet
(Circular 212 Method)

I/S #:	North-South Street:	Telfair Avenue	Year of Count:	2015	Ambient Growth: (%):	1.5	Conducted by:	City Traffic Counters	Date:	4/28/2015
CMA12	East-West Street:	Sheldon Street	Projection Year:	2018	Peak Hour:	PM	Reviewed by:		Project:	Pacoima Reservoir Project/1-13-4

No. of Phases				2				2				2				2				2			
Opposed Ø'ing: N/S-1, E/W-2 or Both-3?				0				0				0				0				0			
Right Turns: FREE-1, NRTOR-2 or OLA-3?	NB--	0	SB--	0	NB--	0	SB--	0	NB--	0	SB--	0	NB--	0	SB--	0	NB--	0	SB--	0			
	EB--	0	WB--	0	EB--	0	WB--	0	EB--	0	WB--	0	EB--	0	WB--	0	EB--	0	WB--	0			
ATSAC-1 or ATSAC+ATCS-2?				2				2				2				2				2			
Override Capacity				0				0				0				0				0			

	MOVEMENT	EXISTING CONDITION			EXISTING PLUS PROJECT			FUTURE CONDITION W/O PROJECT				FUTURE CONDITION W/ PROJECT				FUTURE W/ PROJECT W/ MITIGATION			
		Volume	No. of Lanes	Lane Volume	Project Traffic	Total Volume	Lane Volume	Added Volume	Total Volume	No. of Lanes	Lane Volume	Added Volume	Total Volume	No. of Lanes	Lane Volume	Added Volume	Total Volume	No. of Lanes	Lane Volume
NORTHBOUND	Left	90	0	90	0	90	90	0	94	0	94	0	94	0	94	0	94	0	94
	Left-Through		0							0				0				0	
	Through	7	0	**149**	0	7	**149**	0	7	0	**155**	0	7	0	**155**	0	7	0	**155**
	Through-Right		0							0				0				0	
	Right	52	0	0	0	52	0	0	54	0	0	0	54	0	0	0	54	0	0
	Left-Through-Right		1							1				1				1	
	Left-Right		0							0				0				0	
SOUTHBOUND	Left	4	0	**4**	0	4	**4**	0	4	0	**4**	0	4	0	**4**	0	4	0	**4**
	Left-Through		0							0				0				0	
	Through	6	0	37	0	6	37	0	6	0	38	0	6	0	38	0	6	0	38
	Through-Right		0							0				0				0	
	Right	27	0	0	0	27	0	0	28	0	0	0	28	0	0	0	28	0	0
	Left-Through-Right		1							1				1				1	
	Left-Right		0							0				0				0	
EASTBOUND	Left	10	0	10	0	10	10	0	10	0	10	0	10	0	10	0	10	0	10
	Left-Through		1							1				1				1	
	Through	739	0	**446**	30	769	**461**	0	773	0	**465**	30	803	0	**480**	0	803	0	**480**
	Through-Right		1							1				1				1	
	Right	112	0	446	0	112	461	0	117	0	465	0	117	0	480	0	117	0	480
	Left-Through-Right		0							0				0				0	
	Left-Right		0							0				0				0	
WESTBOUND	Left	54	0	**54**	0	54	**54**	0	56	0	**56**	0	56	0	**56**	0	56	0	**56**
	Left-Through		1							1				1				1	
	Through	647	0	437	30	677	452	0	677	0	457	30	707	0	472	0	707	0	472
	Through-Right		1							1				1				1	
	Right	11	0	437	0	11	452	0	12	0	457	0	12	0	472	0	12	0	472
	Left-Through-Right		0							0				0				0	
	Left-Right		0							0				0				0	
CRITICAL VOLUMES		*North-South:*		153	*North-South:*		153	*North-South:*			159	*North-South:*			159	*North-South:*			159
		East-West:		500	*East-West:*		515	*East-West:*			521	*East-West:*			536	*East-West:*			536
		SUM:		653	*SUM:*		668	*SUM:*			680	*SUM:*			695	*SUM:*			695
VOLUME/CAPACITY *(V/C)* RATIO:				0.435			0.445				0.453				0.463				0.463
V/C LESS ATSAC/ATCS ADJUSTMENT:				**0.335**			**0.345**				**0.353**				**0.363**				**0.363**
LEVEL OF SERVICE (LOS):				**A**			**A**				**A**				**A**				**A**

REMARKS: Alt. Route 4: Using only Cal-Mat Pit

Version: 1i Beta; 8/4/2011

PROJECT IMPACT

Change in *v/c* due to project:	0.010	Δ*v/c* after mitigation:	0.010
Significant impacted?	NO	Fully mitigated?	N/A

Level of Service Workheet
(Circular 212 Method)

I/S #:	North-South Street:	San Fernando Road	Year of Count:	2015	Ambient Growth: (%):	1.5	Conducted by:	City Traffic Counters	Date:	4/28/2015
CMA13	East-West Street:	Sheldon Street	Projection Year:	2018	Peak Hour:	AM	Reviewed by:		Project:	Pacoima Reservoir Project/1-13-4

	EXISTING CONDITION	EXISTING PLUS PROJECT	FUTURE CONDITION W/O PROJECT	FUTURE CONDITION W/ PROJECT	FUTURE W/ PROJECT W/ MITIGATION
No. of Phases	4	4	4	4	4
Opposed Ø'ing: N/S-1, E/W-2 or Both-3?	0	0	0	0	0
Right Turns: FREE-1, NRTOR-2 or OLA-3?	NB-- 0 SB-- 0 EB-- 0 WB-- 0	NB-- 0 SB-- 0 EB-- 0 WB-- 0	NB-- 0 SB-- 0 EB-- 0 WB-- 0	NB-- 0 SB-- 0 EB-- 0 WB-- 0	NB-- 0 SB-- 0 EB-- 0 WB-- 0
ATSAC-1 or ATSAC+ATCS-2?	2	2	2	2	2
Override Capacity	0	0	0	0	0

	MOVEMENT	EXISTING CONDITION Volume	No. of Lanes	Lane Volume	EXISTING PLUS PROJECT Project Traffic	Total Volume	Lane Volume	FUTURE CONDITION W/O PROJECT Added Volume	Total Volume	No. of Lanes	Lane Volume	FUTURE CONDITION W/ PROJECT Added Volume	Total Volume	No. of Lanes	Lane Volume	FUTURE W/ PROJECT W/ MITIGATION Added Volume	Total Volume	No. of Lanes	Lane Volume
NORTHBOUND	Left	178	1	**178**	0	178	178	0	186	1	**186**	0	186	1	**186**	0	186	1	**186**
	Left-Through		0							0				0				0	
	Through	728	1	403	0	728	**403**	4	765	1	423	0	765	1	423	0	765	1	423
	Through-Right		1							1				1				1	
	Right	77	0	77	0	77	77	0	81	0	81	0	81	0	81	0	81	0	81
	Left-Through-Right		0							0				0				0	
	Left-Right		0							0				0				0	
SOUTHBOUND	Left	97	1	97	20	117	**117**	0	101	1	101	20	121	1	121	0	121	1	121
	Left-Through		0							0				0				0	
	Through	558	1	**339**	0	558	339	8	591	1	**358**	0	591	1	**358**	0	591	1	**358**
	Through-Right		1							1				1				1	
	Right	119	0	119	0	119	119	0	124	0	124	0	124	0	124	0	124	0	124
	Left-Through-Right		0							0				0				0	
	Left-Right		0							0				0				0	
EASTBOUND	Left	53	1	**53**	0	53	**53**	0	55	1	**55**	0	55	1	**55**	0	55	1	**55**
	Left-Through		0							0				0				0	
	Through	433	1	292	30	463	307	0	453	1	305	30	483	1	320	0	483	1	320
	Through-Right		1							1				1				1	
	Right	150	0	150	0	150	150	0	157	0	157	0	157	0	157	0	157	0	157
	Left-Through-Right		0							0				0				0	
	Left-Right		0							0				0				0	
WESTBOUND	Left	144	1	144	0	144	144	0	151	1	151	0	151	1	151	0	151	1	151
	Left-Through		0							0				0				0	
	Through	1022	1	**581**	30	1052	**606**	0	1069	1	**607**	30	1099	1	**632**	0	1099	1	**632**
	Through-Right		1							1				1				1	
	Right	139	0	139	20	159	159	0	145	0	145	20	165	0	165	0	165	0	165
	Left-Through-Right		0							0				0				0	
	Left-Right		0							0				0				0	
CRITICAL VOLUMES		*North-South:*		517	*North-South:*		520	*North-South:*			544	*North-South:*			544	*North-South:*			544
		East-West:		634	*East-West:*		659	*East-West:*			662	*East-West:*			687	*East-West:*			687
		SUM:		1151	*SUM:*		1179	*SUM:*			1206	*SUM:*			1231	*SUM:*			1231
VOLUME/CAPACITY *(V/C)* RATIO:				0.837			0.857				0.877				0.895				0.895
V/C LESS ATSAC/ATCS ADJUSTMENT:				**0.737**			**0.757**				**0.777**				**0.795**				**0.795**
LEVEL OF SERVICE (LOS):				**C**			**C**				**C**				**C**				**C**

REMARKS: Alt. Route 4: Using only Cal-Mat Pit

Version: 1i Beta; 8/4/2011

PROJECT IMPACT

Change in *v/c* due to project:	0.018	Δ*v/c* after mitigation:	0.018
Significant impacted?	NO	Fully mitigated?	N/A

Level of Service Workheet
(Circular 212 Method)

I/S #:	North-South Street:	San Fernando Road	Year of Count:	2015	Ambient Growth: (%):	1.5	Conducted by:	City Traffic Counters	Date:	4/28/2015
CMA13	East-West Street:	Sheldon Street	Projection Year:	2018	Peak Hour:	Mid-Day	Reviewed by:		Project:	Pacoima Reservoir Project/1-13-4

No. of Phases				4				4				4				4				4			4
Opposed Ø'ing: N/S-1, E/W-2 or Both-3?				0				0				0				0				0			0
Right Turns: FREE-1, NRTOR-2 or OLA-3?	NB--	0	SB--	0	NB--	0	SB--	0	NB--	0	SB--	0	NB--	0	SB--	0	NB--	0	SB--	0	NB--	0	SB-- 0
	EB--	0	WB--	0	EB--	0	WB--	0	EB--	0	WB--	0	EB--	0	WB--	0	EB--	0	WB--	0	EB--	0	WB-- 0
ATSAC-1 or ATSAC+ATCS-2?				2				2				2				2				2			2
Override Capacity				0				0				0				0				0			0

MOVEMENT		EXISTING CONDITION			EXISTING PLUS PROJECT			FUTURE CONDITION W/O PROJECT				FUTURE CONDITION W/ PROJECT				FUTURE W/ PROJECT W/ MITIGATION			
		Volume	No. of Lanes	Lane Volume	Project Traffic	Total Volume	Lane Volume	Added Volume	Total Volume	No. of Lanes	Lane Volume	Added Volume	Total Volume	No. of Lanes	Lane Volume	Added Volume	Total Volume	No. of Lanes	Lane Volume
NORTHBOUND	Left	121	1	**121**	0	121	**121**	0	127	1	**127**	0	127	1	**127**	0	127	1	**127**
	Left-Through		0							0				0				0	
	Through	389	1	236	0	389	236	8	415	1	251	0	415	1	251	0	415	1	251
	Through-Right		1							1				1				1	
	Right	82	0	82	0	82	82	0	86	0	86	0	86	0	86	0	86	0	86
	Left-Through-Right		0							0				0				0	
	Left-Right		0							0				0				0	
SOUTHBOUND	Left	70	1	70	20	90	90	0	73	1	73	20	93	1	93	0	93	1	93
	Left-Through		0							0				0				0	
	Through	356	1	**209**	0	356	**209**	6	378	1	**222**	0	378	1	**222**	0	378	1	**222**
	Through-Right		1							1				1				1	
	Right	62	0	62	0	62	62	0	65	0	65	0	65	0	65	0	65	0	65
	Left-Through-Right		0							0				0				0	
	Left-Right		0							0				0				0	
EASTBOUND	Left	65	1	65	0	65	65	0	68	1	68	0	68	1	68	0	68	1	68
	Left-Through		0							0				0				0	
	Through	465	1	**288**	30	495	**303**	0	486	1	**301**	30	516	1	**316**	0	516	1	**316**
	Through-Right		1							1				1				1	
	Right	111	0	111	0	111	111	0	116	0	116	0	116	0	116	0	116	0	116
	Left-Through-Right		0							0				0				0	
	Left-Right		0							0				0				0	
WESTBOUND	Left	84	1	**84**	0	84	**84**	0	88	1	**88**	0	88	1	**88**	0	88	1	**88**
	Left-Through		0							0				0				0	
	Through	441	1	260	30	471	285	0	461	1	272	30	491	1	297	0	491	1	297
	Through-Right		1							1				1				1	
	Right	78	0	78	20	98	98	0	82	0	82	20	102	0	102	0	102	0	102
	Left-Through-Right		0							0				0				0	
	Left-Right		0							0				0				0	
CRITICAL VOLUMES		*North-South:*		330	*North-South:*		330	*North-South:*			349	*North-South:*			349	*North-South:*			349
		East-West:		372	*East-West:*		387	*East-West:*			389	*East-West:*			404	*East-West:*			404
		SUM:		702	*SUM:*		717	*SUM:*			738	*SUM:*			753	*SUM:*			753
VOLUME/CAPACITY *(V/C)* RATIO:				0.511			0.521				0.537				0.548				0.548
V/C LESS ATSAC/ATCS ADJUSTMENT:				**0.411**			**0.421**				**0.437**				**0.448**				**0.448**
LEVEL OF SERVICE (LOS):				**A**			**A**				**A**				**A**				**A**

REMARKS: Alt. Route 4: Using only Cal-Mat Pit

Version: 1i Beta; 8/4/2011

PROJECT IMPACT

Change in *v/c* due to project:	0.011	Δ*v/c* after mitigation:	0.011
Significant impacted?	NO	Fully mitigated?	N/A

Level of Service Workheet
(Circular 212 Method)

I/S #:	North-South Street:	San Fernando Road	Year of Count:	2015	Ambient Growth: (%):	1.5	Conducted by:	City Traffic Counters	Date:	4/28/2015
CMA13	East-West Street:	Sheldon Street	Projection Year:	2018	Peak Hour:	PM	Reviewed by:		Project:	Pacoima Reservoir Project/1-13-4

No. of Phases				4				4				4				4				4			4
Opposed Ø'ing: N/S-1, E/W-2 or Both-3?				0				0				0				0				0			0
Right Turns: FREE-1, NRTOR-2 or OLA-3?	NB--	0	SB--	0	NB--	0	SB--	0	NB--	0	SB--	0	NB--	0	SB--	0	NB--	0	SB--	0			
	EB--	0	WB--	0	EB--	0	WB--	0	EB--	0	WB--	0	EB--	0	WB--	0	EB--	0	WB--	0			
ATSAC-1 or ATSAC+ATCS-2?				2				2				2				2				2			2
Override Capacity				0				0				0				0				0			0

MOVEMENT		EXISTING CONDITION			EXISTING PLUS PROJECT			FUTURE CONDITION W/O PROJECT				FUTURE CONDITION W/ PROJECT				FUTURE W/ PROJECT W/ MITIGATION			
		Volume	No. of Lanes	Lane Volume	Project Traffic	Total Volume	Lane Volume	Added Volume	Total Volume	No. of Lanes	Lane Volume	Added Volume	Total Volume	No. of Lanes	Lane Volume	Added Volume	Total Volume	No. of Lanes	Lane Volume
NORTHBOUND	Left	191	1	**191**	0	191	**191**	0	200	1	**200**	0	200	1	**200**	0	200	1	**200**
	Left-Through		0							0				0				0	
	Through	553	1	332	0	553	332	8	586	1	351	0	586	1	351	0	586	1	351
	Through-Right		1							1				1				1	
	Right	110	0	110	0	110	110	0	115	0	115	0	115	0	115	0	115	0	115
	Left-Through-Right		0							0				0				0	
	Left-Right		0							0				0				0	
SOUTHBOUND	Left	94	1	94	20	114	114	0	98	1	98	20	118	1	118	0	118	1	118
	Left-Through		0							0				0				0	
	Through	573	1	**315**	0	573	**315**	6	605	1	**332**	0	605	1	**332**	0	605	1	**332**
	Through-Right		1							1				1				1	
	Right	56	0	56	0	56	56	0	59	0	59	0	59	0	59	0	59	0	59
	Left-Through-Right		0							0				0				0	
	Left-Right		0							0				0				0	
EASTBOUND	Left	86	1	86	0	86	86	0	90	1	90	0	90	1	90	0	90	1	90
	Left-Through		0							0				0				0	
	Through	734	1	**436**	30	764	**451**	0	768	1	**456**	30	798	1	**471**	0	798	1	**471**
	Through-Right		1							1				1				1	
	Right	138	0	138	0	138	138	0	144	0	144	0	144	0	144	0	144	0	144
	Left-Through-Right		0							0				0				0	
	Left-Right		0							0				0				0	
WESTBOUND	Left	97	1	**97**	0	97	**97**	0	101	1	**101**	0	101	1	**101**	0	101	1	**101**
	Left-Through		0							0				0				0	
	Through	541	1	313	30	571	338	0	566	1	327	30	596	1	352	0	596	1	352
	Through-Right		1							1				1				1	
	Right	84	0	84	20	104	104	0	88	0	88	20	108	0	108	0	108	0	108
	Left-Through-Right		0							0				0				0	
	Left-Right		0							0				0				0	
CRITICAL VOLUMES		*North-South:*		506	*North-South:*		506	*North-South:*			532	*North-South:*			532	*North-South:*			532
		East-West:		533	*East-West:*		548	*East-West:*			557	*East-West:*			572	*East-West:*			572
		SUM:		1039	*SUM:*		1054	*SUM:*			1089	*SUM:*			1104	*SUM:*			1104
VOLUME/CAPACITY *(V/C)* RATIO:				0.756			0.767				0.792				0.803				0.803
V/C LESS ATSAC/ATCS ADJUSTMENT:				**0.656**			**0.667**				**0.692**				**0.703**				**0.703**
LEVEL OF SERVICE (LOS):				**B**			**B**				**B**				**C**				**C**

REMARKS: Alt. Route 4: Using only Cal-Mat Pit

Version: 1i Beta; 8/4/2011

PROJECT IMPACT

Change in *v/c* due to project:	0.011	Δ*v/c* after mitigation:	0.011
Significant impacted?	NO	Fully mitigated?	N/A

Level of Service Workheet
(Circular 212 Method)

I/S #:	North-South Street:	Glenoaks Boulevard	Year of Count:	2015	Ambient Growth: (%):	1.5	Conducted by:	City Traffic Counters	Date:	5/8/2015
CMA14	East-West Street:	Sheldon Street	Projection Year:	2018	Peak Hour:	AM	Reviewed by:		Project:	Pacoima Reservoir Project/1-13-4

No. of Phases				2				2				2				2				2			2
Opposed Ø'ing: N/S-1, E/W-2 or Both-3?				0				0				0				0				0			0
Right Turns: FREE-1, NRTOR-2 or OLA-3?	NB--	0	SB--	0	NB--	0	SB--	0	NB--	0	SB--	0	NB--	0	SB--	0	NB--	0	SB--	0			
	EB--	0	WB--	0	EB--	0	WB--	0	EB--	0	WB--	0	EB--	0	WB--	0	EB--	0	WB--	0			
ATSAC-1 or ATSAC+ATCS-2?				2				2				2				2				2			2
Override Capacity				0				0				0				0				0			0

MOVEMENT		EXISTING CONDITION			EXISTING PLUS PROJECT			FUTURE CONDITION W/O PROJECT				FUTURE CONDITION W/ PROJECT				FUTURE W/ PROJECT W/ MITIGATION			
		Volume	No. of Lanes	Lane Volume	Project Traffic	Total Volume	Lane Volume	Added Volume	Total Volume	No. of Lanes	Lane Volume	Added Volume	Total Volume	No. of Lanes	Lane Volume	Added Volume	Total Volume	No. of Lanes	Lane Volume
NORTHBOUND	Left	129	1	**129**	50	179	**179**	0	135	1	**135**	50	185	1	**185**	0	185	1	**185**
	Left-Through		0							0				0				0	
	Through	400	2	200	0	400	200	14	432	2	216	0	432	2	216	0	432	2	216
	Through-Right		0							0				0				0	
	Right	57	1	17	0	57	17	0	60	1	18	0	60	1	18	0	60	1	18
	Left-Through-Right		0							0				0				0	
	Left-Right		0							0				0				0	
SOUTHBOUND	Left	108	1	108	0	108	108	34	147	1	147	0	147	1	147	0	147	1	147
	Left-Through		0							0				0				0	
	Through	1154	1	**724**	0	1154	**724**	22	1229	1	**768**	0	1229	1	**768**	0	1229	1	**768**
	Through-Right		1							1				1				1	
	Right	293	0	293	0	293	293	0	306	0	306	0	306	0	306	0	306	0	306
	Left-Through-Right		0							0				0				0	
	Left-Right		0							0				0				0	
EASTBOUND	Left	202	1	**202**	0	202	**202**	0	211	1	**211**	0	211	1	**211**	0	211	1	**211**
	Left-Through		0							0				0				0	
	Through	250	1	182	50	300	207	0	261	1	190	50	311	1	215	0	311	1	215
	Through-Right		1							1				1				1	
	Right	113	0	113	0	113	113	0	118	0	118	0	118	0	118	0	118	0	118
	Left-Through-Right		0							0				0				0	
	Left-Right		0							0				0				0	
WESTBOUND	Left	81	1	81	0	81	81	0	85	1	85	0	85	1	85	0	85	1	85
	Left-Through		0							0				0				0	
	Through	444	1	**256**	0	444	**256**	0	464	1	**285**	0	464	1	**285**	0	464	1	**285**
	Through-Right		1							1				1				1	
	Right	68	0	68	0	68	68	34	105	0	105	0	105	0	105	0	105	0	105
	Left-Through-Right		0							0				0				0	
	Left-Right		0							0				0				0	
CRITICAL VOLUMES		*North-South:*		853	*North-South:*		903	*North-South:*			903	*North-South:*			953	*North-South:*			953
		East-West:		458	*East-West:*		458	*East-West:*			496	*East-West:*			496	*East-West:*			496
		SUM:		1311	*SUM:*		1361	*SUM:*			1399	*SUM:*			1449	*SUM:*			1449
VOLUME/CAPACITY *(V/C)* RATIO:				0.874			0.907				0.933				0.966				0.966
V/C LESS ATSAC/ATCS ADJUSTMENT:				**0.774**			**0.807**				**0.833**				**0.866**				**0.866**
LEVEL OF SERVICE (LOS):				**C**			**D**				**D**				**D**				**D**

REMARKS: Alt. Route 4: Using only Cal-Mat Pit

Version: 1i Beta; 8/4/2011

PROJECT IMPACT

Change in *v/c* due to project:	0.033	Δ*v/c* after mitigation:	0.033
Significant impacted?	YES	Fully mitigated?	NO

Level of Service Workheet
(Circular 212 Method)

I/S #:	North-South Street:	Glenoaks Boulevard	Year of Count:	2015	Ambient Growth: (%):	1.5	Conducted by:	City Traffic Counters	Date:	5/8/2015
CMA14	East-West Street:	Sheldon Street	Projection Year:	2018	Peak Hour:	Mid-Day	Reviewed by:		Project:	Pacoima Reservoir Project/1-13-4

No. of Phases				2				2				2				2				2			2
Opposed Ø'ing: N/S-1, E/W-2 or Both-3?				0				0				0				0				0			0
Right Turns: FREE-1, NRTOR-2 or OLA-3?	NB--	0	SB--	0	NB--	0	SB--	0	NB--	0	SB--	0	NB--	0	SB--	0	NB--	0	SB--	0	NB--	0	SB-- 0
	EB--	0	WB--	0	EB--	0	WB--	0	EB--	0	WB--	0	EB--	0	WB--	0	EB--	0	WB--	0	EB--	0	WB-- 0
ATSAC-1 or ATSAC+ATCS-2?				2				2				2				2				2			2
Override Capacity				0				0				0				0				0			0

	MOVEMENT	EXISTING CONDITION			EXISTING PLUS PROJECT			FUTURE CONDITION W/O PROJECT				FUTURE CONDITION W/ PROJECT				FUTURE W/ PROJECT W/ MITIGATION			
		Volume	No. of Lanes	Lane Volume	Project Traffic	Total Volume	Lane Volume	Added Volume	Total Volume	No. of Lanes	Lane Volume	Added Volume	Total Volume	No. of Lanes	Lane Volume	Added Volume	Total Volume	No. of Lanes	Lane Volume
NORTHBOUND	Left	186	1	**186**	50	236	**236**	0	194	1	**194**	50	244	1	**244**	0	244	1	**244**
	Left-Through		0							0				0				0	
	Through	436	2	218	0	436	218	21	477	2	239	0	477	2	239	0	477	2	239
	Through-Right		0							0				0				0	
	Right	51	1	29	0	51	29	0	53	1	30	0	53	1	30	0	53	1	30
	Left-Through-Right		0							0				0				0	
	Left-Right		0							0				0				0	
SOUTHBOUND	Left	85	1	85	0	85	85	34	123	1	123	0	123	1	123	0	123	1	123
	Left-Through		0							0				0				0	
	Through	482	1	**313**	0	482	**313**	15	519	1	**335**	0	519	1	**335**	0	519	1	**335**
	Through-Right		1							1				1				1	
	Right	144	0	144	0	144	144	0	151	0	151	0	151	0	151	0	151	0	151
	Left-Through-Right		0							0				0				0	
	Left-Right		0							0				0				0	
EASTBOUND	Left	172	1	**172**	0	172	**172**	0	180	1	**180**	0	180	1	**180**	0	180	1	**180**
	Left-Through		0							0				0				0	
	Through	241	1	175	50	291	200	0	252	1	183	50	302	1	208	0	302	1	208
	Through-Right		1							1				1				1	
	Right	109	0	109	0	109	109	0	114	0	114	0	114	0	114	0	114	0	114
	Left-Through-Right		0							0				0				0	
	Left-Right		0							0				0				0	
WESTBOUND	Left	45	1	45	0	45	45	0	47	1	47	0	47	1	47	0	47	1	47
	Left-Through		0							0				0				0	
	Through	173	1	**115**	0	173	**115**	0	181	1	**137**	0	181	1	**137**	0	181	1	**137**
	Through-Right		1							1				1				1	
	Right	56	0	56	0	56	56	34	93	0	93	0	93	0	93	0	93	0	93
	Left-Through-Right		0							0				0				0	
	Left-Right		0							0				0				0	
CRITICAL VOLUMES		*North-South:*		499	*North-South:*		549	*North-South:*			529	*North-South:*			579	*North-South:*			579
		East-West:		287	*East-West:*		287	*East-West:*			317	*East-West:*			317	*East-West:*			317
		SUM:		786	*SUM:*		836	*SUM:*			846	*SUM:*			896	*SUM:*			896
VOLUME/CAPACITY *(V/C)* RATIO:				0.524			0.557				0.564				0.597				0.597
V/C LESS ATSAC/ATCS ADJUSTMENT:				**0.424**			**0.457**				**0.464**				**0.497**				**0.497**
LEVEL OF SERVICE (LOS):				**A**			**A**				**A**				**A**				**A**

REMARKS: Alt. Route 4: Using only Cal-Mat Pit

Version: 1i Beta; 8/4/2011

PROJECT IMPACT

Change in *v/c* due to project:	0.033	Δ*v/c* after mitigation:	0.033
Significant impacted?	NO	Fully mitigated?	N/A

Level of Service Workheet
(Circular 212 Method)

I/S #:	North-South Street:	Glenoaks Boulevard	Year of Count:	2015	Ambient Growth: (%):	1.5	Conducted by:	City Traffic Counters	Date:	5/8/2015
CMA14	East-West Street:	Sheldon Street	Projection Year:	2018	Peak Hour:	PM	Reviewed by:		Project:	Pacoima Reservoir Project/1-13-4

No. of Phases				2				2				2				2				2			2
Opposed Ø'ing: N/S-1, E/W-2 or Both-3?				0				0				0				0				0			0
Right Turns: FREE-1, NRTOR-2 or OLA-3?	NB--	0	SB--	0	NB--	0	SB--	0	NB--	0	SB--	0	NB--	0	SB--	0	NB--	0	SB--	0	NB--	0	SB-- 0
	EB--	0	WB--	0	EB--	0	WB--	0	EB--	0	WB--	0	EB--	0	WB--	0	EB--	0	WB--	0	EB--	0	WB-- 0
ATSAC-1 or ATSAC+ATCS-2?				2				2				2				2				2			2
Override Capacity				0				0				0				0				0			0

MOVEMENT		EXISTING CONDITION			EXISTING PLUS PROJECT			FUTURE CONDITION W/O PROJECT				FUTURE CONDITION W/ PROJECT				FUTURE W/ PROJECT W/ MITIGATION			
		Volume	No. of Lanes	Lane Volume	Project Traffic	Total Volume	Lane Volume	Added Volume	Total Volume	No. of Lanes	Lane Volume	Added Volume	Total Volume	No. of Lanes	Lane Volume	Added Volume	Total Volume	No. of Lanes	Lane Volume
NORTHBOUND	Left	185	1	**185**	50	235	**235**	0	193	1	**193**	50	243	1	**243**	0	243	1	**243**
	Left-Through		0							0				0				0	
	Through	822	2	411	0	822	411	23	883	2	442	0	883	2	442	0	883	2	442
	Through-Right		0							0				0				0	
	Right	63	1	36	0	63	36	0	66	1	38	0	66	1	38	0	66	1	38
	Left-Through-Right		0							0				0				0	
	Left-Right		0							0				0				0	
SOUTHBOUND	Left	107	1	107	0	107	107	34	146	1	146	0	146	1	146	0	146	1	146
	Left-Through		0							0				0				0	
	Through	697	1	**436**	0	697	**436**	17	746	1	**465**	0	746	1	**465**	0	746	1	**465**
	Through-Right		1							1				1				1	
	Right	175	0	175	0	175	175	0	183	0	183	0	183	0	183	0	183	0	183
	Left-Through-Right		0							0				0				0	
	Left-Right		0							0				0				0	
EASTBOUND	Left	279	1	**279**	0	279	**279**	0	292	1	**292**	0	292	1	**292**	0	292	1	**292**
	Left-Through		0							0				0				0	
	Through	408	1	280	50	458	305	0	427	1	293	50	477	1	318	0	477	1	318
	Through-Right		1							1				1				1	
	Right	151	0	151	0	151	151	0	158	0	158	0	158	0	158	0	158	0	158
	Left-Through-Right		0							0				0				0	
	Left-Right		0							0				0				0	
WESTBOUND	Left	54	1	54	0	54	54	0	56	1	56	0	56	1	56	0	56	1	56
	Left-Through		0							0				0				0	
	Through	208	1	**139**	0	208	**139**	0	218	1	**162**	0	218	1	**162**	0	218	1	**162**
	Through-Right		1							1				1				1	
	Right	69	0	69	0	69	69	34	106	0	106	0	106	0	106	0	106	0	106
	Left-Through-Right		0							0				0				0	
	Left-Right		0							0				0				0	
CRITICAL VOLUMES		*North-South:*		621	*North-South:*		671	*North-South:*			658	*North-South:*			708	*North-South:*			708
		East-West:		418	*East-West:*		418	*East-West:*			454	*East-West:*			454	*East-West:*			454
		SUM:		1039	*SUM:*		1089	*SUM:*			1112	*SUM:*			1162	*SUM:*			1162
VOLUME/CAPACITY *(V/C)* RATIO:				0.693			0.726				0.741				0.775				0.775
V/C LESS ATSAC/ATCS ADJUSTMENT:				**0.593**			**0.626**				**0.641**				**0.675**				**0.675**
LEVEL OF SERVICE (LOS):				**A**			**B**				**B**				**B**				**B**

REMARKS: Alt. Route 4: Using only Cal-Mat Pit

Version: 1i Beta; 8/4/2011

PROJECT IMPACT

Change in *v/c* due to project:	0.034	Δ*v/c* after mitigation:	0.034
Significant impacted?	NO	Fully mitigated?	N/A

Level of Service Workheet
(Circular 212 Method)

I/S #:	North-South Street:	Laurel Canyon Boulevard	Year of Count:	2015	Ambient Growth: (%):	1.5	Conducted by:	City Traffic Counters	Date:	4/29/2015
CMA15	East-West Street:	Paxton Street	Projection Year:	2018	Peak Hour:	AM	Reviewed by:		Project:	Pacoima Reservoir Project/1-13-4

No. of Phases				3				3				3				3				3		
Opposed Ø'ing: N/S-1, E/W-2 or Both-3?				0				0				0				0				0		
Right Turns: FREE-1, NRTOR-2 or OLA-3?	NB--	0	SB--	0	NB--	0	SB--	0	NB--	0	SB--	0	NB--	0	SB--	0	NB--	0	SB--	0		
	EB--	0	WB--	0	EB--	0	WB--	0	EB--	0	WB--	0	EB--	0	WB--	0	EB--	0	WB--	0		
ATSAC-1 or ATSAC+ATCS-2?				2				2				2				2				2		
Override Capacity				0				0				0				0				0		

	MOVEMENT	EXISTING CONDITION			EXISTING PLUS PROJECT			FUTURE CONDITION W/O PROJECT				FUTURE CONDITION W/ PROJECT				FUTURE W/ PROJECT W/ MITIGATION			
		Volume	No. of Lanes	Lane Volume	Project Traffic	Total Volume	Lane Volume	Added Volume	Total Volume	No. of Lanes	Lane Volume	Added Volume	Total Volume	No. of Lanes	Lane Volume	Added Volume	Total Volume	No. of Lanes	Lane Volume
NORTHBOUND	Left	63	1	**63**	0	63	**63**	6	72	1	**72**	0	72	1	**72**	0	72	1	**72**
	Left-Through		0							0				0				0	
	Through	949	1	542	0	949	542	14	1006	1	573	0	1006	1	573	0	1006	1	573
	Through-Right		1							1				1				1	
	Right	134	0	134	0	134	134	0	140	0	140	0	140	0	140	0	140	0	140
	Left-Through-Right		0							0				0				0	
	Left-Right		0							0				0				0	
SOUTHBOUND	Left	145	1	145	0	145	145	0	152	1	152	0	152	1	152	0	152	1	152
	Left-Through		0							0				0				0	
	Through	1292	1	**789**	0	1292	**789**	21	1372	1	**835**	0	1372	1	**835**	0	1372	1	**835**
	Through-Right		1							1				1				1	
	Right	285	0	285	0	285	285	0	298	0	298	0	298	0	298	0	298	0	298
	Left-Through-Right		0							0				0				0	
	Left-Right		0							0				0				0	
EASTBOUND	Left	79	1	79	0	79	79	0	83	1	83	0	83	1	83	0	83	1	83
	Left-Through		0							0				0				0	
	Through	588	1	**317**	20	608	**327**	1	616	1	**336**	20	636	1	**346**	0	636	1	**346**
	Through-Right		1							1				1				1	
	Right	45	0	45	0	45	45	8	55	0	55	0	55	0	55	0	55	0	55
	Left-Through-Right		0							0				0				0	
	Left-Right		0							0				0				0	
WESTBOUND	Left	97	1	**97**	0	97	**97**	0	101	1	**101**	0	101	1	**101**	0	101	1	**101**
	Left-Through		0							0				0				0	
	Through	410	1	308	20	430	318	1	430	1	323	20	450	1	333	0	450	1	333
	Through-Right		1							1				1				1	
	Right	206	0	206	0	206	206	0	215	0	215	0	215	0	215	0	215	0	215
	Left-Through-Right		0							0				0				0	
	Left-Right		0							0				0				0	
CRITICAL VOLUMES		*North-South:*		852	*North-South:*		852	*North-South:*			907	*North-South:*			907	*North-South:*			907
		East-West:		414	*East-West:*		424	*East-West:*			437	*East-West:*			447	*East-West:*			447
		SUM:		1266	*SUM:*		1276	*SUM:*			1344	*SUM:*			1354	*SUM:*			1354
VOLUME/CAPACITY *(V/C)* RATIO:				0.888			0.895				0.943				0.950				0.950
V/C LESS ATSAC/ATCS ADJUSTMENT:				**0.788**			**0.795**				**0.843**				**0.850**				**0.850**
LEVEL OF SERVICE (LOS):				**C**			**C**				**D**				**D**				**D**

REMARKS: Alt. Route 4: Using only Cal-Mat Pit

Version: 1i Beta; 8/4/2011

PROJECT IMPACT

Change in *v/c* due to project:	0.007	Δ*v/c* after mitigation:	0.007
Significant impacted?	NO	Fully mitigated?	N/A

Level of Service Workheet
(Circular 212 Method)

I/S #:	North-South Street:	Laurel Canyon Boulevard	Year of Count:	2015	Ambient Growth: (%):	1.5	Conducted by:	City Traffic Counters	Date:	4/29/2015
CMA15	East-West Street:	Paxton Street	Projection Year:	2018	Peak Hour:	Mid-Day	Reviewed by:		Project:	Pacoima Reservoir Project/1-13-4

No. of Phases				3				3				3				3				3		
Opposed Ø'ing: N/S-1, E/W-2 or Both-3?				0				0				0				0				0		
Right Turns: FREE-1, NRTOR-2 or OLA-3?	NB--	0	SB--	0	NB--	0	SB--	0	NB--	0	SB--	0	NB--	0	SB--	0	NB--	0	SB--	0		
	EB--	0	WB--	0	EB--	0	WB--	0	EB--	0	WB--	0	EB--	0	WB--	0	EB--	0	WB--	0		
ATSAC-1 or ATSAC+ATCS-2?				2				2				2				2				2		
Override Capacity				0				0				0				0				0		

	MOVEMENT	EXISTING CONDITION			EXISTING PLUS PROJECT			FUTURE CONDITION W/O PROJECT				FUTURE CONDITION W/ PROJECT				FUTURE W/ PROJECT W/ MITIGATION			
		Volume	No. of Lanes	Lane Volume	Project Traffic	Total Volume	Lane Volume	Added Volume	Total Volume	No. of Lanes	Lane Volume	Added Volume	Total Volume	No. of Lanes	Lane Volume	Added Volume	Total Volume	No. of Lanes	Lane Volume
NORTHBOUND	Left	83	1	83	0	83	83	1	88	1	88	0	88	1	88	0	88	1	88
	Left-Through		0							0				0				0	
	Through	548	1	**331**	0	548	**331**	1	574	1	**346**	0	574	1	**346**	0	574	1	**346**
	Through-Right		1							1				1				1	
	Right	113	0	113	0	113	113	0	118	0	118	0	118	0	118	0	118	0	118
	Left-Through-Right		0							0				0				0	
	Left-Right		0							0				0				0	
SOUTHBOUND	Left	155	1	**155**	0	155	**155**	0	162	1	**162**	0	162	1	**162**	0	162	1	**162**
	Left-Through		0							0				0				0	
	Through	510	1	292	0	510	292	1	534	1	305	0	534	1	305	0	534	1	305
	Through-Right		1							1				1				1	
	Right	73	0	73	0	73	73	0	76	0	76	0	76	0	76	0	76	0	76
	Left-Through-Right		0							0				0				0	
	Left-Right		0							0				0				0	
EASTBOUND	Left	114	1	**114**	0	114	**114**	0	119	1	**119**	0	119	1	**119**	0	119	1	**119**
	Left-Through		0							0				0				0	
	Through	307	1	170	20	327	180	1	322	1	179	20	342	1	189	0	342	1	189
	Through-Right		1							1				1				1	
	Right	33	0	33	0	33	33	1	36	0	36	0	36	0	36	0	36	0	36
	Left-Through-Right		0							0				0				0	
	Left-Right		0							0				0				0	
WESTBOUND	Left	78	1	78	0	78	78	0	82	1	82	0	82	1	82	0	82	1	82
	Left-Through		0							0				0				0	
	Through	240	1	**178**	20	260	**188**	1	252	1	**187**	20	272	1	**197**	0	272	1	**197**
	Through-Right		1							1				1				1	
	Right	116	0	116	0	116	116	0	121	0	121	0	121	0	121	0	121	0	121
	Left-Through-Right		0							0				0				0	
	Left-Right		0							0				0				0	
CRITICAL VOLUMES			*North-South:*	486		*North-South:*	486		*North-South:*	508			*North-South:*	508			*North-South:*	508	
			East-West:	292		*East-West:*	302		*East-West:*	306			*East-West:*	316			*East-West:*	316	
			SUM:	778		*SUM:*	788		*SUM:*	814			*SUM:*	824			*SUM:*	824	
VOLUME/CAPACITY *(V/C)* RATIO:				0.546			0.553				0.571				0.578				0.578
V/C LESS ATSAC/ATCS ADJUSTMENT:				**0.446**			**0.453**				**0.471**				**0.478**				**0.478**
LEVEL OF SERVICE (LOS):				**A**			**A**				**A**				**A**				**A**

REMARKS: Alt. Route 4: Using only Cal-Mat Pit

Version: 1i Beta; 8/4/2011

PROJECT IMPACT

Change in *v/c* due to project:	0.007	Δ*v/c* after mitigation:	0.007
Significant impacted?	NO	Fully mitigated?	N/A

Level of Service Workheet
(Circular 212 Method)

I/S #:	North-South Street:	Laurel Canyon Boulevard	Year of Count:	2015	Ambient Growth: (%):	1.5	Conducted by:	City Traffic Counters	Date:	4/29/2015
CMA15	East-West Street:	Paxton Street	Projection Year:	2018	Peak Hour:	PM	Reviewed by:		Project:	Pacoima Reservoir Project/1-13-4

No. of Phases				3				3				3				3				3			3
Opposed Ø'ing: N/S-1, E/W-2 or Both-3?				0				0				0				0				0			0
Right Turns: FREE-1, NRTOR-2 or OLA-3?	NB--	0	SB--	0	NB--	0	SB--	0	NB--	0	SB--	0	NB--	0	SB--	0	NB--	0	SB--	0	NB--	0	SB-- 0
	EB--	0	WB--	0	EB--	0	WB--	0	EB--	0	WB--	0	EB--	0	WB--	0	EB--	0	WB--	0	EB--	0	WB-- 0
ATSAC-1 or ATSAC+ATCS-2?				2				2				2				2				2			2
Override Capacity				0				0				0				0				0			0

	MOVEMENT	EXISTING CONDITION			EXISTING PLUS PROJECT			FUTURE CONDITION W/O PROJECT				FUTURE CONDITION W/ PROJECT				FUTURE W/ PROJECT W/ MITIGATION			
		Volume	No. of Lanes	Lane Volume	Project Traffic	Total Volume	Lane Volume	Added Volume	Total Volume	No. of Lanes	Lane Volume	Added Volume	Total Volume	No. of Lanes	Lane Volume	Added Volume	Total Volume	No. of Lanes	Lane Volume
NORTHBOUND	Left	160	1	160	0	160	160	5	172	1	172	0	172	1	172	0	172	1	172
	Left-Through		0							0				0				0	
	Through	1224	1	**693**	0	1224	**693**	11	1291	1	**730**	0	1291	1	**730**	0	1291	1	**730**
	Through-Right		1							1				1				1	
	Right	162	0	162	0	162	162	0	169	0	169	0	169	0	169	0	169	0	169
	Left-Through-Right		0							0				0				0	
	Left-Right		0							0				0				0	
SOUTHBOUND	Left	193	1	**193**	0	193	**193**	0	202	1	**202**	0	202	1	**202**	0	202	1	**202**
	Left-Through		0							0				0				0	
	Through	1050	1	643	0	1050	643	8	1106	1	677	0	1106	1	677	0	1106	1	677
	Through-Right		1							1				1				1	
	Right	236	0	236	0	236	236	0	247	0	247	0	247	0	247	0	247	0	247
	Left-Through-Right		0							0				0				0	
	Left-Right		0							0				0				0	
EASTBOUND	Left	89	1	89	0	89	89	0	93	1	93	0	93	1	93	0	93	1	93
	Left-Through		0							0				0				0	
	Through	682	1	**399**	20	702	**409**	1	714	1	**420**	20	734	1	**430**	0	734	1	**430**
	Through-Right		1							1				1				1	
	Right	116	0	116	0	116	116	4	125	0	125	0	125	0	125	0	125	0	125
	Left-Through-Right		0							0				0				0	
	Left-Right		0							0				0				0	
WESTBOUND	Left	101	1	**101**	0	101	**101**	0	106	1	**106**	0	106	1	**106**	0	106	1	**106**
	Left-Through		0							0				0				0	
	Through	550	1	327	20	570	337	1	576	1	342	20	596	1	352	0	596	1	352
	Through-Right		1							1				1				1	
	Right	103	0	103	0	103	103	0	108	0	108	0	108	0	108	0	108	0	108
	Left-Through-Right		0							0				0				0	
	Left-Right		0							0				0				0	
CRITICAL VOLUMES			*North-South:*	886		*North-South:*	886		*North-South:*	932			*North-South:*	932			*North-South:*	932	
			East-West:	500		*East-West:*	510		*East-West:*	526			*East-West:*	536			*East-West:*	536	
			SUM:	1386		*SUM:*	1396		*SUM:*	1458			*SUM:*	1468			*SUM:*	1468	
VOLUME/CAPACITY *(V/C)* RATIO:				0.973			0.980				1.023				1.030				1.030
V/C LESS ATSAC/ATCS ADJUSTMENT:				**0.873**			**0.880**				**0.923**				**0.930**				**0.930**
LEVEL OF SERVICE (LOS):				**D**			**D**				**E**				**E**				**E**

REMARKS: Alt. Route 4: Using only Cal-Mat Pit

Version: 1i Beta; 8/4/2011

PROJECT IMPACT

Change in *v/c* due to project:	0.007	Δ*v/c* after mitigation:	0.007
Significant impacted?	NO	Fully mitigated?	N/A

Level of Service Workheet
(Circular 212 Method)

I/S #:	North-South Street:	Haddon Street	Year of Count:	2015	Ambient Growth: (%):	1.5	Conducted by:	City Traffic Counters	Date:	4/29/2015
CMA16	East-West Street:	Paxton Street	Projection Year:	2018	Peak Hour:	AM	Reviewed by:		Project:	Pacoima Reservoir Project/1-13-4

	Existing Condition	Existing Plus Project	Future Condition W/O Project	Future Condition W/ Project	Future W/ Project W/ Mitigation
No. of Phases	0	0	0	0	0
Opposed Ø'ing: N/S-1, E/W-2 or Both-3?	0	0	0	0	0
Right Turns: FREE-1, NRTOR-2 or OLA-3?	NB-- 0 SB-- 0 EB-- 0 WB-- 0	NB-- 0 SB-- 0 EB-- 0 WB-- 0	NB-- 0 SB-- 0 EB-- 0 WB-- 0	NB-- 0 SB-- 0 EB-- 0 WB-- 0	NB-- 0 SB-- 0 EB-- 0 WB-- 0
ATSAC-1 or ATSAC+ATCS-2?	0	0	0	0	0
Override Capacity	1200	#####	1200	1200	1200

	MOVEMENT	Existing Condition Volume	No. of Lanes	Lane Volume	Existing Plus Project Project Traffic	Total Volume	Lane Volume	Future Condition W/O Project Added Volume	Total Volume	No. of Lanes	Lane Volume	Future Condition W/ Project Added Volume	Total Volume	No. of Lanes	Lane Volume	Future W/ Project W/ Mitigation Added Volume	Total Volume	No. of Lanes	Lane Volume
NORTHBOUND	Left	24	0	24	0	24	24	0	25	0	25	0	25	0	25	0	25	0	25
	Left-Through		0							0				0				0	
	Through	0	0	**108**	0	0	**108**	0	0	0	**113**	0	0	0	**113**	0	0	0	**113**
	Through-Right		0							0				0				0	
	Right	84	0	0	0	84	0	0	88	0	0	0	88	0	0	0	88	0	0
	Left-Through-Right		1							1				1				1	
	Left-Right		0							0				0				0	
SOUTHBOUND	Left	1	0	**1**	0	1	**1**	0	1	0	**1**	0	1	0	**1**	0	1	0	**1**
	Left-Through		0							0				0				0	
	Through	0	0	9	0	0	9	0	0	0	9	0	0	0	9	0	0	0	9
	Through-Right		0							0				0				0	
	Right	8	0	0	0	8	0	0	8	0	0	0	8	0	0	0	8	0	0
	Left-Through-Right		1							1				1				1	
	Left-Right		0							0				0				0	
EASTBOUND	Left	9	1	9	0	9	9	0	9	1	9	0	9	1	9	0	9	1	9
	Left-Through		0							0				0				0	
	Through	807	1	**416**	20	827	**426**	1	845	1	**436**	20	865	1	**446**	0	865	1	**446**
	Through-Right		1							1				1				1	
	Right	25	0	25	0	25	25	0	26	0	26	0	26	0	26	0	26	0	26
	Left-Through-Right		0							0				0				0	
	Left-Right		0							0				0				0	
WESTBOUND	Left	73	1	**73**	0	73	**73**	0	76	1	**76**	0	76	1	**76**	0	76	1	**76**
	Left-Through		0							0				0				0	
	Through	766	1	386	20	786	396	1	802	1	404	20	822	1	414	0	822	1	414
	Through-Right		1							1				1				1	
	Right	5	0	5	0	5	5	0	5	0	5	0	5	0	5	0	5	0	5
	Left-Through-Right		0							0				0				0	
	Left-Right		0							0				0				0	
CRITICAL VOLUMES		North-South:		109	North-South:		109	North-South:			114	North-South:			114	North-South:			114
		East-West:		489	East-West:		499	East-West:			512	East-West:			522	East-West:			522
		SUM:		598	SUM:		608	SUM:			626	SUM:			636	SUM:			636
VOLUME/CAPACITY (V/C) RATIO:				0.498			0.507				0.522				0.530				0.530
V/C LESS ATSAC/ATCS ADJUSTMENT:				0.498			0.507				0.522				0.530				0.530
LEVEL OF SERVICE (LOS):				A			A				A				A				A

REMARKS: Alt. Route 4: Using only Cal-Mat Pit

Version: 1i Beta; 8/4/2011

PROJECT IMPACT

Change in *v/c* due to project:	0.008	Δ*v/c* after mitigation:	0.008
Significant impacted?	NO	Fully mitigated?	N/A

Level of Service Workheet
(Circular 212 Method)

I/S #:	North-South Street:	Haddon Street	Year of Count:	2015	Ambient Growth: (%):	1.5	Conducted by:	City Traffic Counters	Date:	4/29/2015
CMA16	East-West Street:	Paxton Street	Projection Year:	2018	Peak Hour:	Mid-Day	Reviewed by:		Project:	Pacoima Reservoir Project/1-13-4

No. of Phases				0				0				0				0				0			
Opposed Ø'ing: N/S-1, E/W-2 or Both-3?				0				0				0				0				0			
Right Turns: FREE-1, NRTOR-2 or OLA-3?	NB--	0	SB--	0	NB--	0	SB--	0	NB--	0	SB--	0	NB--	0	SB--	0	NB--	0	SB--	0			
	EB--	0	WB--	0	EB--	0	WB--	0	EB--	0	WB--	0	EB--	0	WB--	0	EB--	0	WB--	0			
ATSAC-1 or ATSAC+ATCS-2?				0				0				0				0				0			
Override Capacity				1200				#####				1200				1200				1200			

	MOVEMENT	EXISTING CONDITION			EXISTING PLUS PROJECT			FUTURE CONDITION W/O PROJECT				FUTURE CONDITION W/ PROJECT				FUTURE W/ PROJECT W/ MITIGATION			
		Volume	No. of Lanes	Lane Volume	Project Traffic	Total Volume	Lane Volume	Added Volume	Total Volume	No. of Lanes	Lane Volume	Added Volume	Total Volume	No. of Lanes	Lane Volume	Added Volume	Total Volume	No. of Lanes	Lane Volume
NORTHBOUND	Left	8	0	8	0	8	8	0	8	0	8	0	8	0	8	0	8	0	8
	Left-Through		0							0				0				0	
	Through	3	0	**39**	0	3	**39**	0	3	0	**40**	0	3	0	**40**	0	3	0	**40**
	Through-Right		0							0				0				0	
	Right	28	0	0	0	28	0	0	29	0	0	0	29	0	0	0	29	0	0
	Left-Through-Right		1							1				1				1	
	Left-Right		0							0				0				0	
SOUTHBOUND	Left	2	0	**2**	0	2	**2**	0	2	0	**2**	0	2	0	**2**	0	2	0	**2**
	Left-Through		0							0				0				0	
	Through	0	0	9	0	0	9	0	0	0	9	0	0	0	9	0	0	0	9
	Through-Right		0							0				0				0	
	Right	7	0	0	0	7	0	0	7	0	0	0	7	0	0	0	7	0	0
	Left-Through-Right		1							1				1				1	
	Left-Right		0							0				0				0	
EASTBOUND	Left	6	1	6	0	6	6	0	6	1	6	0	6	1	6	0	6	1	6
	Left-Through		0							0				0				0	
	Through	483	1	**250**	20	503	**260**	1	506	1	**262**	20	526	1	**272**	0	526	1	**272**
	Through-Right		1							1				1				1	
	Right	17	0	17	0	17	17	0	18	0	18	0	18	0	18	0	18	0	18
	Left-Through-Right		0							0				0				0	
	Left-Right		0							0				0				0	
WESTBOUND	Left	49	1	**49**	0	49	**49**	0	51	1	**51**	0	51	1	**51**	0	51	1	**51**
	Left-Through		0							0				0				0	
	Through	526	1	264	20	546	274	1	551	1	277	20	571	1	287	0	571	1	287
	Through-Right		1							1				1				1	
	Right	2	0	2	0	2	2	0	2	0	2	0	2	0	2	0	2	0	2
	Left-Through-Right		0							0				0				0	
	Left-Right		0							0				0				0	
CRITICAL VOLUMES		North-South:		41	North-South:		41	North-South:			42	North-South:			42	North-South:			42
		East-West:		299	East-West:		309	East-West:			313	East-West:			323	East-West:			323
		SUM:		340	SUM:		350	SUM:			355	SUM:			365	SUM:			365
VOLUME/CAPACITY (V/C) RATIO:				0.283			0.292				0.296				0.304				0.304
V/C LESS ATSAC/ATCS ADJUSTMENT:				0.283			0.292				0.296				0.304				0.304
LEVEL OF SERVICE (LOS):				A			A				A				A				A

REMARKS: Alt. Route 4: Using only Cal-Mat Pit

Version: 1i Beta; 8/4/2011

PROJECT IMPACT

Change in *v/c* due to project:	0.008	Δ*v/c* after mitigation:	0.008
Significant impacted?	NO	Fully mitigated?	N/A

Level of Service Workheet
(Circular 212 Method)

I/S #:	North-South Street:	Haddon Street	Year of Count:	2015	Ambient Growth: (%):	1.5	Conducted by:	City Traffic Counters	Date:	4/29/2015
CMA16	East-West Street:	Paxton Street	Projection Year:	2018	Peak Hour:	PM	Reviewed by:		Project:	Pacoima Reservoir Project/1-13-4

	Existing Condition	Existing Plus Project	Future Condition W/O Project	Future Condition W/ Project	Future W/ Project W/ Mitigation
No. of Phases	0	0	0	0	0
Opposed Ø'ing: N/S-1, E/W-2 or Both-3?	0	0	0	0	0
Right Turns: FREE-1, NRTOR-2 or OLA-3?	NB-- 0 SB-- 0	NB-- 0 SB-- 0	NB-- 0 SB-- 0	NB-- 0 SB-- 0	NB-- 0 SB-- 0
	EB-- 0 WB-- 0	EB-- 0 WB-- 0	EB-- 0 WB-- 0	EB-- 0 WB-- 0	EB-- 0 WB-- 0
ATSAC-1 or ATSAC+ATCS-2?	0	0	0	0	0
Override Capacity	1200	#####	1200	1200	1200

	MOVEMENT	Existing Condition Volume	No. of Lanes	Lane Volume	Existing Plus Project Project Traffic	Total Volume	Lane Volume	Future Condition W/O Project Added Volume	Total Volume	No. of Lanes	Lane Volume	Future Condition W/ Project Added Volume	Total Volume	No. of Lanes	Lane Volume	Future W/ Project W/ Mitigation Added Volume	Total Volume	No. of Lanes	Lane Volume
NORTHBOUND	Left	10	0	10	0	10	10	0	10	0	10	0	10	0	10	0	10	0	10
	Left-Through		0							0				0				0	
	Through	1	0	**82**	0	1	**82**	0	1	0	**85**	0	1	0	**85**	0	1	0	**85**
	Through-Right		0							0				0				0	
	Right	71	0	0	0	71	0	0	74	0	0	0	74	0	0	0	74	0	0
	Left-Through-Right		1							1				1				1	
	Left-Right		0							0				0				0	
SOUTHBOUND	Left	5	0	**5**	0	5	**5**	0	5	0	**5**	0	5	0	**5**	0	5	0	**5**
	Left-Through		0							0				0				0	
	Through	0	0	10	0	0	10	0	0	0	10	0	0	0	10	0	0	0	10
	Through-Right		0							0				0				0	
	Right	5	0	0	0	5	0	0	5	0	0	0	5	0	0	0	5	0	0
	Left-Through-Right		1							1				1				1	
	Left-Right		0							0				0				0	
EASTBOUND	Left	18	1	18	0	18	18	0	19	1	19	0	19	1	19	0	19	1	19
	Left-Through		0							0				0				0	
	Through	1002	1	**518**	20	1022	**528**	1	1049	1	**543**	20	1069	1	**553**	0	1069	1	**553**
	Through-Right		1							1				1				1	
	Right	34	0	34	0	34	34	0	36	0	36	0	36	0	36	0	36	0	36
	Left-Through-Right		0							0				0				0	
	Left-Right		0							0				0				0	
WESTBOUND	Left	70	1	**70**	0	70	**70**	0	73	1	**73**	0	73	1	**73**	0	73	1	**73**
	Left-Through		0							0				0				0	
	Through	681	1	344	20	701	354	1	713	1	360	20	733	1	370	0	733	1	370
	Through-Right		1							1				1				1	
	Right	7	0	7	0	7	7	0	7	0	7	0	7	0	7	0	7	0	7
	Left-Through-Right		0							0				0				0	
	Left-Right		0							0				0				0	
CRITICAL VOLUMES		North-South:		87	North-South:		87	North-South:			90	North-South:			90	North-South:			90
		East-West:		588	East-West:		598	East-West:			616	East-West:			626	East-West:			626
		SUM:		675	SUM:		685	SUM:			706	SUM:			716	SUM:			716
VOLUME/CAPACITY (V/C) RATIO:				0.563			0.571				0.588				0.597				0.597
V/C LESS ATSAC/ATCS ADJUSTMENT:				0.563			0.571				0.588				0.597				0.597
LEVEL OF SERVICE (LOS):				A			A				A				A				A

REMARKS: Alt. Route 4: Using only Cal-Mat Pit

Version: 1i Beta; 8/4/2011

PROJECT IMPACT

Change in *v/c* due to project:	0.009	Δ*v/c* after mitigation:	0.009
Significant impacted?	NO	Fully mitigated?	N/A

Level of Service Workheet
(Circular 212 Method)

I/S #:	North-South Street:	Kewen Avenue	Year of Count:	2015	Ambient Growth: (%):	1.5	Conducted by:	City Traffic Counters	Date:	4/29/2015
CMA17	East-West Street:	Paxton Street	Projection Year:	2018	Peak Hour:	AM	Reviewed by:		Project:	Pacoima Reservoir Project/1-13-4

No. of Phases				0				0				0				0				0
Opposed Ø'ing: N/S-1, E/W-2 or Both-3?				0				0				0				0				0
Right Turns: FREE-1, NRTOR-2 or OLA-3?	NB-- 0	SB--		0	NB-- 0	SB--		0	NB-- 0	SB--		0	NB-- 0	SB--		0	NB-- 0	SB--		0
	EB-- 0	WB--		0	EB-- 0	WB--		0	EB-- 0	WB--		0	EB-- 0	WB--		0	EB-- 0	WB--		0
ATSAC-1 or ATSAC+ATCS-2?				0				0				0				0				0
Override Capacity				1200				#####				1200				1200				1200

	MOVEMENT	EXISTING CONDITION			EXISTING PLUS PROJECT			FUTURE CONDITION W/O PROJECT				FUTURE CONDITION W/ PROJECT				FUTURE W/ PROJECT W/ MITIGATION			
		Volume	No. of Lanes	Lane Volume	Project Traffic	Total Volume	Lane Volume	Added Volume	Total Volume	No. of Lanes	Lane Volume	Added Volume	Total Volume	No. of Lanes	Lane Volume	Added Volume	Total Volume	No. of Lanes	Lane Volume
NORTHBOUND	Left	36	0	36	0	36	36	0	38	0	38	0	38	0	38	0	38	0	38
	Left-Through		0							0				0				0	
	Through	0	0	0	0	0	0	0	0	0	0	0	0	0	0	0	0	0	0
	Through-Right		0							0				0				0	
	Right	86	0	**122**	0	86	**122**	0	90	0	**128**	0	90	0	**128**	0	90	0	**128**
	Left-Through-Right		0							0				0				0	
	Left-Right		1							1				1				1	
SOUTHBOUND	Left	0	0	**0**	0	0	**0**	0	0	0	**0**	0	0	0	**0**	0	0	0	**0**
	Left-Through		0							0				0				0	
	Through	0	0	0	0	0	0	0	0	0	0	0	0	0	0	0	0	0	0
	Through-Right		0							0				0				0	
	Right	0	0	0	0	0	0	0	0	0	0	0	0	0	0	0	0	0	0
	Left-Through-Right		0							0				0				0	
	Left-Right		0							0				0				0	
EASTBOUND	Left	0	0	0	0	0	0	0	0	0	0	0	0	0	0	0	0	0	0
	Left-Through		0							0				0				0	
	Through	833	1	**444**	20	853	**454**	1	872	1	**464**	20	892	1	**474**	0	892	1	**474**
	Through-Right		1							1				1				1	
	Right	54	0	54	0	54	54	0	56	0	56	0	56	0	56	0	56	0	56
	Left-Through-Right		0							0				0				0	
	Left-Right		0							0				0				0	
WESTBOUND	Left	52	1	**52**	0	52	**52**	0	54	1	**54**	0	54	1	**54**	0	54	1	**54**
	Left-Through		0							0				0				0	
	Through	785	2	393	20	805	403	1	822	2	411	20	842	2	421	0	842	2	421
	Through-Right		0							0				0				0	
	Right	0	0	0	0	0	0	0	0	0	0	0	0	0	0	0	0	0	0
	Left-Through-Right		0							0				0				0	
	Left-Right		0							0				0				0	
CRITICAL VOLUMES		*North-South:*		122	*North-South:*		122	*North-South:*			128	*North-South:*			128	*North-South:*			128
		East-West:		496	*East-West:*		506	*East-West:*			518	*East-West:*			528	*East-West:*			528
		SUM:		618	*SUM:*		628	*SUM:*			646	*SUM:*			656	*SUM:*			656
VOLUME/CAPACITY *(V/C)* RATIO:				0.515			0.523				0.538				0.547				0.547
V/C LESS ATSAC/ATCS ADJUSTMENT:				0.515			0.523				0.538				0.547				0.547
LEVEL OF SERVICE (LOS):				A			A				A				A				A

REMARKS: Alt. Route 4: Using only Cal-Mat Pit

Version: 1i Beta; 8/4/2011

PROJECT IMPACT

Change in *v/c* due to project:	0.009	Δ*v/c* after mitigation:	0.009
Significant impacted?	NO	Fully mitigated?	N/A

Level of Service Workheet
(Circular 212 Method)

I/S #:	North-South Street:	Kewen Avenue	Year of Count:	2015	Ambient Growth: (%):	1.5	Conducted by:	City Traffic Counters	Date:	4/29/2015
CMA17	East-West Street:	Paxton Street	Projection Year:	2018	Peak Hour:	Mid-Day	Reviewed by:		Project:	Pacoima Reservoir Project/1-13-4

No. of Phases				0				0				0				0				0	
Opposed Ø'ing: N/S-1, E/W-2 or Both-3?				0				0				0				0				0	
Right Turns: FREE-1, NRTOR-2 or OLA-3?	NB-- 0	SB--	0	NB-- 0	SB--	0	NB-- 0	SB--	0	NB-- 0	SB--	0	NB-- 0	SB--	0	NB-- 0	SB--	0	NB-- 0	SB--	0
	EB-- 0	WB--	0	EB-- 0	WB--	0	EB--	WB--	0	EB--	WB--	0	EB-- 0	WB--	0	EB-- 0	WB--	0	EB-- 0	WB--	0
ATSAC-1 or ATSAC+ATCS-2?			0			0			0			0			0			0			0
Override Capacity			1200			#####			1200			1200			1200			1200			1200

	MOVEMENT	EXISTING CONDITION			EXISTING PLUS PROJECT			FUTURE CONDITION W/O PROJECT				FUTURE CONDITION W/ PROJECT				FUTURE W/ PROJECT W/ MITIGATION			
		Volume	No. of Lanes	Lane Volume	Project Traffic	Total Volume	Lane Volume	Added Volume	Total Volume	No. of Lanes	Lane Volume	Added Volume	Total Volume	No. of Lanes	Lane Volume	Added Volume	Total Volume	No. of Lanes	Lane Volume
NORTHBOUND	Left	8	0	8	0	8	8	0	8	0	8	0	8	0	8	0	8	0	8
	Left-Through		0							0				0				0	
	Through	0	0	0	0	0	0	0	0	0	0	0	0	0	0	0	0	0	0
	Through-Right		0							0				0				0	
	Right	26	0	**34**	0	26	**34**	0	27	0	**35**	0	27	0	**35**	0	27	0	**35**
	Left-Through-Right		0							0				0				0	
	Left-Right		1							1				1				1	
SOUTHBOUND	Left	0	0	**0**	0	0	**0**	0	0	0	**0**	0	0	0	**0**	0	0	0	**0**
	Left-Through		0							0				0				0	
	Through	0	0	0	0	0	0	0	0	0	0	0	0	0	0	0	0	0	0
	Through-Right		0							0				0				0	
	Right	0	0	0	0	0	0	0	0	0	0	0	0	0	0	0	0	0	0
	Left-Through-Right		0							0				0				0	
	Left-Right		0							0				0				0	
EASTBOUND	Left	0	0	0	0	0	0	0	0	0	0	0	0	0	0	0	0	0	0
	Left-Through		0							0				0				0	
	Through	523	1	**272**	20	543	**282**	1	548	1	**285**	20	568	1	**295**	0	568	1	**295**
	Through-Right		1							1				1				1	
	Right	20	0	20	0	20	20	0	21	0	21	0	21	0	21	0	21	0	21
	Left-Through-Right		0							0				0				0	
	Left-Right		0							0				0				0	
WESTBOUND	Left	25	1	**25**	0	25	**25**	0	26	1	**26**	0	26	1	**26**	0	26	1	**26**
	Left-Through		0							0				0				0	
	Through	522	2	261	20	542	271	1	547	2	274	20	567	2	284	0	567	2	284
	Through-Right		0							0				0				0	
	Right	0	0	0	0	0	0	0	0	0	0	0	0	0	0	0	0	0	0
	Left-Through-Right		0							0				0				0	
	Left-Right		0							0				0				0	
CRITICAL VOLUMES		*North-South:*		34	*North-South:*		34	*North-South:*			35	*North-South:*			35	*North-South:*			35
		East-West:		297	*East-West:*		307	*East-West:*			311	*East-West:*			321	*East-West:*			321
		SUM:		331	*SUM:*		341	*SUM:*			346	*SUM:*			356	*SUM:*			356
VOLUME/CAPACITY *(V/C)* RATIO:				0.276			0.284				0.288				0.297				0.297
V/C LESS ATSAC/ATCS ADJUSTMENT:				0.276			0.284				0.288				0.297				0.297
LEVEL OF SERVICE (LOS):				A			A				A				A				A

REMARKS: Alt. Route 4: Using only Cal-Mat Pit

Version: 1i Beta; 8/4/2011

PROJECT IMPACT

Change in *v/c* due to project:	0.009	Δ*v/c* after mitigation:	0.009
Significant impacted?	NO	Fully mitigated?	N/A

Level of Service Workheet
(Circular 212 Method)

I/S #:	North-South Street:	Kewen Avenue	Year of Count:	2015	Ambient Growth: (%):	1.5	Conducted by:	City Traffic Counters	Date:	4/29/2015
CMA17	East-West Street:	Paxton Street	Projection Year:	2018	Peak Hour:	PM	Reviewed by:		Project:	Pacoima Reservoir Project/1-13-4

No. of Phases				0				0				0				0				0			
Opposed Ø'ing: N/S-1, E/W-2 or Both-3?				0				0				0				0				0			
Right Turns: FREE-1, NRTOR-2 or OLA-3?	NB--	0	SB--	0	NB--	0	SB--	0	NB--	0	SB--	0	NB--	0	SB--	0	NB--	0	SB--	0
	EB--	0	WB--	0	EB--	0	WB--	0	EB--	0	WB--	0	EB--	0	WB--	0	EB--	0	WB--	0
ATSAC-1 or ATSAC+ATCS-2?				0				0				0				0				0
Override Capacity				1200				#####				1200				1200				1200

	MOVEMENT	EXISTING CONDITION			EXISTING PLUS PROJECT			FUTURE CONDITION W/O PROJECT				FUTURE CONDITION W/ PROJECT				FUTURE W/ PROJECT W/ MITIGATION			
		Volume	No. of Lanes	Lane Volume	Project Traffic	Total Volume	Lane Volume	Added Volume	Total Volume	No. of Lanes	Lane Volume	Added Volume	Total Volume	No. of Lanes	Lane Volume	Added Volume	Total Volume	No. of Lanes	Lane Volume
NORTHBOUND	Left	18	0	18	0	18	18	0	19	0	19	0	19	0	19	0	19	0	19
	Left-Through		0							0				0				0	
	Through	0	0	0	0	0	0	0	0	0	0	0	0	0	0	0	0	0	0
	Through-Right		0							0				0				0	
	Right	56	0	**74**	0	56	**74**	0	59	0	**78**	0	59	0	**78**	0	59	0	**78**
	Left-Through-Right		0							0				0				0	
	Left-Right		1							1				1				1	
SOUTHBOUND	Left	0	0	**0**	0	0	**0**	0	0	0	**0**	0	0	0	**0**	0	0	0	**0**
	Left-Through		0							0				0				0	
	Through	0	0	0	0	0	0	0	0	0	0	0	0	0	0	0	0	0	0
	Through-Right		0							0				0				0	
	Right	0	0	0	0	0	0	0	0	0	0	0	0	0	0	0	0	0	0
	Left-Through-Right		0							0				0				0	
	Left-Right		0							0				0				0	
EASTBOUND	Left	0	0	0	0	0	0	0	0	0	0	0	0	0	0	0	0	0	0
	Left-Through		0							0				0				0	
	Through	1027	1	**531**	20	1047	**541**	1	1075	1	**556**	20	1095	1	**566**	0	1095	1	**566**
	Through-Right		1							1				1				1	
	Right	35	0	35	0	35	35	0	37	0	37	0	37	0	37	0	37	0	37
	Left-Through-Right		0							0				0				0	
	Left-Right		0							0				0				0	
WESTBOUND	Left	26	1	**26**	0	26	**26**	0	27	1	**27**	0	27	1	**27**	0	27	1	**27**
	Left-Through		0							0				0				0	
	Through	748	2	374	20	768	384	1	783	2	392	20	803	2	402	0	803	2	402
	Through-Right		0							0				0				0	
	Right	0	0	0	0	0	0	0	0	0	0	0	0	0	0	0	0	0	0
	Left-Through-Right		0							0				0				0	
	Left-Right		0							0				0				0	
CRITICAL VOLUMES		*North-South:*		74	*North-South:*		74	*North-South:*			78	*North-South:*			78	*North-South:*			78
		East-West:		557	*East-West:*		567	*East-West:*			583	*East-West:*			593	*East-West:*			593
		SUM:		631	*SUM:*		641	*SUM:*			661	*SUM:*			671	*SUM:*			671
VOLUME/CAPACITY *(V/C)* RATIO:				0.526			0.534				0.551				0.559				0.559
V/C LESS ATSAC/ATCS ADJUSTMENT:				0.526			0.534				0.551				0.559				0.559
LEVEL OF SERVICE (LOS):				A			A				A				A				A

REMARKS: Alt. Route 4: Using only Cal-Mat Pit

Version: 1i Beta; 8/4/2011

PROJECT IMPACT

Change in *v/c* due to project:	0.008	Δ*v/c* after mitigation:	0.008
Significant impacted?	NO	Fully mitigated?	N/A

Level of Service Workheet
(Circular 212 Method)

I/S #:	North-South Street:	Telfair Avenue	Year of Count:	2015	Ambient Growth: (%):	1.5	Conducted by:	City Traffic Counters	Date:	4/29/2015
CMA18	East-West Street:	Paxton Street	Projection Year:	2018	Peak Hour:	AM	Reviewed by:		Project:	Pacoima Reservoir Project/1-13-4

No. of Phases				2				2				2				2				2			
Opposed Ø'ing: N/S-1, E/W-2 or Both-3?				0				0				0				0				0			
Right Turns: FREE-1, NRTOR-2 or OLA-3?	NB--	0	SB--	0	NB--	0	SB--	0	NB--	0	SB--	0	NB--	0	SB--	0	NB--	0	SB--	0			
	EB--	0	WB--	0	EB--	0	WB--	0	EB--	0	WB--	0	EB--	0	WB--	0	EB--	0	WB--	0			
ATSAC-1 or ATSAC+ATCS-2?				2				2				2				2				2			
Override Capacity				0				0				0				0				0			

	MOVEMENT	EXISTING CONDITION			EXISTING PLUS PROJECT			FUTURE CONDITION W/O PROJECT				FUTURE CONDITION W/ PROJECT				FUTURE W/ PROJECT W/ MITIGATION			
		Volume	No. of Lanes	Lane Volume	Project Traffic	Total Volume	Lane Volume	Added Volume	Total Volume	No. of Lanes	Lane Volume	Added Volume	Total Volume	No. of Lanes	Lane Volume	Added Volume	Total Volume	No. of Lanes	Lane Volume
NORTHBOUND	Left	57	0	**57**	0	57	**57**	0	60	0	**60**	0	60	0	**60**	0	60	0	**60**
	Left-Through		0							0				0				0	
	Through	57	0	158	0	57	158	0	60	0	166	0	60	0	166	0	60	0	166
	Through-Right		0							0				0				0	
	Right	44	0	0	0	44	0	0	46	0	0	0	46	0	0	0	46	0	0
	Left-Through-Right		1							1				1				1	
	Left-Right		0							0				0				0	
SOUTHBOUND	Left	51	0	51	0	51	51	0	53	0	53	0	53	0	53	0	53	0	53
	Left-Through		0							0				0				0	
	Through	38	0	**185**	0	38	**185**	0	40	0	**193**	0	40	0	**193**	0	40	0	**193**
	Through-Right		0							0				0				0	
	Right	96	0	0	0	96	0	0	100	0	0	0	100	0	0	0	100	0	0
	Left-Through-Right		1							1				1				1	
	Left-Right		0							0				0				0	
EASTBOUND	Left	98	1	98	0	98	98	0	102	1	102	0	102	1	102	0	102	1	102
	Left-Through		0							0				0				0	
	Through	752	1	**419**	20	772	**429**	1	787	1	**439**	20	807	1	**449**	0	807	1	**449**
	Through-Right		1							1				1				1	
	Right	86	0	86	0	86	86	0	90	0	90	0	90	0	90	0	90	0	90
	Left-Through-Right		0							0				0				0	
	Left-Right		0							0				0				0	
WESTBOUND	Left	68	1	**68**	0	68	**68**	0	71	1	**71**	0	71	1	**71**	0	71	1	**71**
	Left-Through		0							0				0				0	
	Through	659	1	346	20	679	356	1	690	1	362	20	710	1	372	0	710	1	372
	Through-Right		1							1				1				1	
	Right	32	0	32	0	32	32	0	33	0	33	0	33	0	33	0	33	0	33
	Left-Through-Right		0							0				0				0	
	Left-Right		0							0				0				0	
CRITICAL VOLUMES		*North-South:*		242	*North-South:*		242	*North-South:*			253	*North-South:*			253	*North-South:*			253
		East-West:		487	*East-West:*		497	*East-West:*			510	*East-West:*			520	*East-West:*			520
		SUM:		729	*SUM:*		739	*SUM:*			763	*SUM:*			773	*SUM:*			773
VOLUME/CAPACITY *(V/C)* RATIO:				0.486			0.493				0.509				0.515				0.515
V/C LESS ATSAC/ATCS ADJUSTMENT:				**0.386**			**0.393**				**0.409**				**0.415**				**0.415**
LEVEL OF SERVICE (LOS):				**A**			**A**				**A**				**A**				**A**

REMARKS: Alt. Route 4: Using only Cal-Mat Pit

Version: 1i Beta; 8/4/2011

PROJECT IMPACT

Change in *v/c* due to project:	0.006	Δ*v/c* after mitigation:	0.006
Significant impacted?	NO	Fully mitigated?	N/A

Level of Service Workheet
(Circular 212 Method)

I/S #:	North-South Street:	Telfair Avenue	Year of Count:	2015	Ambient Growth: (%):	1.5	Conducted by:	City Traffic Counters	Date:	4/29/2015
CMA18	East-West Street:	Paxton Street	Projection Year:	2018	Peak Hour:	Mid-Day	Reviewed by:		Project:	Pacoima Reservoir Project/1-13-4

No. of Phases				2				2				2				2				2			
Opposed Ø'ing: N/S-1, E/W-2 or Both-3?				0				0				0				0				0			
Right Turns: FREE-1, NRTOR-2 or OLA-3?	NB--	0	SB--	0	NB--	0	SB--	0	NB--	0	SB--	0	NB--	0	SB--	0	NB--	0	SB--	0			
	EB--	0	WB--	0	EB--	0	WB--	0	EB--	0	WB--	0	EB--	0	WB--	0	EB--	0	WB--	0			
ATSAC-1 or ATSAC+ATCS-2?				2				2				2				2				2			
Override Capacity				0				0				0				0				0			

	MOVEMENT	EXISTING CONDITION			EXISTING PLUS PROJECT			FUTURE CONDITION W/O PROJECT				FUTURE CONDITION W/ PROJECT				FUTURE W/ PROJECT W/ MITIGATION			
		Volume	No. of Lanes	Lane Volume	Project Traffic	Total Volume	Lane Volume	Added Volume	Total Volume	No. of Lanes	Lane Volume	Added Volume	Total Volume	No. of Lanes	Lane Volume	Added Volume	Total Volume	No. of Lanes	Lane Volume
NORTHBOUND	Left	25	0	**25**	0	25	**25**	0	26	0	**26**	0	26	0	**26**	0	26	0	**26**
	Left-Through		0							0				0				0	
	Through	13	0	75	0	13	75	0	14	0	79	0	14	0	79	0	14	0	79
	Through-Right		0							0				0				0	
	Right	37	0	0	0	37	0	0	39	0	0	0	39	0	0	0	39	0	0
	Left-Through-Right		1							1				1				1	
	Left-Right		0							0				0				0	
SOUTHBOUND	Left	16	0	16	0	16	16	0	17	0	17	0	17	0	17	0	17	0	17
	Left-Through		0							0				0				0	
	Through	13	0	**78**	0	13	**78**	0	14	0	**82**	0	14	0	**82**	0	14	0	**82**
	Through-Right		0							0				0				0	
	Right	49	0	0	0	49	0	0	51	0	0	0	51	0	0	0	51	0	0
	Left-Through-Right		1							1				1				1	
	Left-Right		0							0				0				0	
EASTBOUND	Left	67	1	**67**	0	67	**67**	0	70	1	**70**	0	70	1	**70**	0	70	1	**70**
	Left-Through		0							0				0				0	
	Through	456	1	239	20	476	249	1	478	1	251	20	498	1	261	0	498	1	261
	Through-Right		1							1				1				1	
	Right	22	0	22	0	22	22	0	23	0	23	0	23	0	23	0	23	0	23
	Left-Through-Right		0							0				0				0	
	Left-Right		0							0				0				0	
WESTBOUND	Left	26	1	26	0	26	26	0	27	1	27	0	27	1	27	0	27	1	27
	Left-Through		0							0				0				0	
	Through	470	1	**247**	20	490	**257**	1	492	1	**258**	20	512	1	**268**	0	512	1	**268**
	Through-Right		1							1				1				1	
	Right	23	0	23	0	23	23	0	24	0	24	0	24	0	24	0	24	0	24
	Left-Through-Right		0							0				0				0	
	Left-Right		0							0				0				0	
CRITICAL VOLUMES		*North-South:*		103	*North-South:*		103	*North-South:*			108	*North-South:*			108	*North-South:*			108
		East-West:		314	*East-West:*		324	*East-West:*			328	*East-West:*			338	*East-West:*			338
		SUM:		417	*SUM:*		427	*SUM:*			436	*SUM:*			446	*SUM:*			446
VOLUME/CAPACITY *(V/C)* RATIO:				0.278			0.285				0.291				0.297				0.297
V/C LESS ATSAC/ATCS ADJUSTMENT:				**0.178**			**0.185**				**0.191**				**0.197**				**0.197**
LEVEL OF SERVICE (LOS):				**A**			**A**				**A**				**A**				**A**

REMARKS: Alt. Route 4: Using only Cal-Mat Pit

Version: 1i Beta; 8/4/2011

PROJECT IMPACT

Change in *v/c* due to project:	0.006	Δ*v/c* after mitigation:	0.006
Significant impacted?	NO	Fully mitigated?	N/A

Level of Service Workheet
(Circular 212 Method)

I/S #:	North-South Street:	Telfair Avenue	Year of Count:	2015	Ambient Growth: (%):	1.5	Conducted by:	City Traffic Counters	Date:	4/29/2015
CMA18	East-West Street:	Paxton Street	Projection Year:	2018	Peak Hour:	PM	Reviewed by:		Project:	Pacoima Reservoir Project/1-13-4

No. of Phases				2				2				2				2				2			
Opposed Ø'ing: N/S-1, E/W-2 or Both-3?				0				0				0				0				0			
Right Turns: FREE-1, NRTOR-2 or OLA-3?	NB--	0	SB--	0	NB--	0	SB--	0	NB--	0	SB--	0	NB--	0	SB--	0	NB--	0	SB--	0			
	EB--	0	WB--	0	EB--	0	WB--	0	EB--	0	WB--	0	EB--	0	WB--	0	EB--	0	WB--	0			
ATSAC-1 or ATSAC+ATCS-2?				2				2				2				2				2			
Override Capacity				0				0				0				0				0			

MOVEMENT		EXISTING CONDITION			EXISTING PLUS PROJECT			FUTURE CONDITION W/O PROJECT				FUTURE CONDITION W/ PROJECT				FUTURE W/ PROJECT W/ MITIGATION			
		Volume	No. of Lanes	Lane Volume	Project Traffic	Total Volume	Lane Volume	Added Volume	Total Volume	No. of Lanes	Lane Volume	Added Volume	Total Volume	No. of Lanes	Lane Volume	Added Volume	Total Volume	No. of Lanes	Lane Volume
NORTHBOUND	Left	39	0	**39**	0	39	**39**	0	41	0	**41**	0	41	0	**41**	0	41	0	**41**
	Left-Through		0							0				0				0	
	Through	48	0	130	0	48	130	0	50	0	136	0	50	0	136	0	50	0	136
	Through-Right		0							0				0				0	
	Right	43	0	0	0	43	0	0	45	0	0	0	45	0	0	0	45	0	0
	Left-Through-Right		1							1				1				1	
	Left-Right		0							0				0				0	
SOUTHBOUND	Left	29	0	29	0	29	29	0	30	0	30	0	30	0	30	0	30	0	30
	Left-Through		0							0				0				0	
	Through	29	0	**122**	0	29	**122**	0	30	0	**127**	0	30	0	**127**	0	30	0	**127**
	Through-Right		0							0				0				0	
	Right	64	0	0	0	64	0	0	67	0	0	0	67	0	0	0	67	0	0
	Left-Through-Right		1							1				1				1	
	Left-Right		0							0				0				0	
EASTBOUND	Left	109	1	109	0	109	109	0	114	1	114	0	114	1	114	0	114	1	114
	Left-Through		0							0				0				0	
	Through	924	1	**486**	20	944	**496**	1	967	1	**509**	20	987	1	**519**	0	987	1	**519**
	Through-Right		1							1				1				1	
	Right	48	0	48	0	48	48	0	50	0	50	0	50	0	50	0	50	0	50
	Left-Through-Right		0							0				0				0	
	Left-Right		0							0				0				0	
WESTBOUND	Left	51	1	**51**	0	51	**51**	0	53	1	**53**	0	53	1	**53**	0	53	1	**53**
	Left-Through		0							0				0				0	
	Through	662	1	351	20	682	361	1	693	1	368	20	713	1	378	0	713	1	378
	Through-Right		1							1				1				1	
	Right	40	0	40	0	40	40	0	42	0	42	0	42	0	42	0	42	0	42
	Left-Through-Right		0							0				0				0	
	Left-Right		0							0				0				0	
CRITICAL VOLUMES		*North-South:*		161	*North-South:*		161	*North-South:*			168	*North-South:*			168	*North-South:*			168
		East-West:		537	*East-West:*		547	*East-West:*			562	*East-West:*			572	*East-West:*			572
		SUM:		698	*SUM:*		708	*SUM:*			730	*SUM:*			740	*SUM:*			740
VOLUME/CAPACITY *(V/C)* RATIO:				0.465			0.472				0.487				0.493				0.493
V/C LESS ATSAC/ATCS ADJUSTMENT:				**0.365**			**0.372**				**0.387**				**0.393**				**0.393**
LEVEL OF SERVICE (LOS):				**A**			**A**				**A**				**A**				**A**

REMARKS: Alt. Route 4: Using only Cal-Mat Pit

Version: 1i Beta; 8/4/2011

PROJECT IMPACT

Change in *v/c* due to project:	0.006	Δ*v/c* after mitigation:	0.006
Significant impacted?	NO	Fully mitigated?	N/A

Level of Service Workheet
(Circular 212 Method)

I/S #:	North-South Street:	San Fernando Road	Year of Count:	2015	Ambient Growth: (%):	1.5	Conducted by:	City Traffic Counters	Date:	4/29/2015
CMA19	East-West Street:	Paxton Street	Projection Year:	2018	Peak Hour:	AM	Reviewed by:		Project:	Pacoima Reservoir Project/1-13-4

No. of Phases				4				4				4				4				4		
Opposed Ø'ing: N/S-1, E/W-2 or Both-3?				2				2				2				2				2		
Right Turns: FREE-1, NRTOR-2 or OLA-3?	NB--	0	SB--	3	NB--	0	SB--	3	NB--	0	SB--	3	NB--	0	SB--	3	NB--	0	SB--	3	NB--	0	SB--	3
	EB--	3	WB--	2	EB--	3	WB--	2	EB--	3	WB--	2	EB--	3	WB--	2	EB--	3	WB--	2	EB--	3	WB--	2
ATSAC-1 or ATSAC+ATCS-2?				2				2				2				2				2		
Override Capacity				0				0				0				0				0		

	MOVEMENT	EXISTING CONDITION			EXISTING PLUS PROJECT			FUTURE CONDITION W/O PROJECT				FUTURE CONDITION W/ PROJECT				FUTURE W/ PROJECT W/ MITIGATION			
		Volume	No. of Lanes	Lane Volume	Project Traffic	Total Volume	Lane Volume	Added Volume	Total Volume	No. of Lanes	Lane Volume	Added Volume	Total Volume	No. of Lanes	Lane Volume	Added Volume	Total Volume	No. of Lanes	Lane Volume
NORTHBOUND	Left	33	1	33	20	53	53	0	35	1	35	20	55	1	55	0	55	1	55
	Left-Through		0							0				0				0	
	Through	696	2	**348**	0	696	**348**	12	740	2	**370**	0	740	2	**370**	0	740	2	**370**
	Through-Right		0							0				0				0	
	Right	383	1	304	0	383	304	0	400	1	318	0	400	1	318	0	400	1	318
	Left-Through-Right		0							0				0				0	
	Left-Right		0							0				0				0	
SOUTHBOUND	Left	153	1	**153**	0	153	**153**	0	160	1	**160**	0	160	1	**160**	0	160	1	**160**
	Left-Through		0							0				0				0	
	Through	749	2	375	0	749	375	20	803	2	402	0	803	2	402	0	803	2	402
	Through-Right		0							0				0				0	
	Right	278	1	180	0	278	180	0	291	1	189	0	291	1	189	0	291	1	189
	Left-Through-Right		0							0				0				0	
	Left-Right		0							0				0				0	
EASTBOUND	Left	98	1	98	0	98	98	0	102	1	102	0	102	1	102	0	102	1	102
	Left-Through		0							0				0				0	
	Through	741	2	**371**	0	741	**371**	1	776	2	**388**	0	776	2	**388**	0	776	2	**388**
	Through-Right		0							0				0				0	
	Right	44	1	11	20	64	11	0	46	1	11	20	66	1	11	0	66	1	11
	Left-Through-Right		0							0				0				0	
	Left-Right		0							0				0				0	
WESTBOUND	Left	158	1	158	0	158	158	0	165	1	165	0	165	1	165	0	165	1	165
	Left-Through		0							0				0				0	
	Through	533	1	**422**	0	533	**422**	1	558	1	**441**	0	558	1	**441**	0	558	1	**441**
	Through-Right		1							1				1				1	
	Right	310	0	310	0	310	310	0	324	0	324	0	324	0	324	0	324	0	324
	Left-Through-Right		0							0				0				0	
	Left-Right		0							0				0				0	
CRITICAL VOLUMES			*North-South:*	501		*North-South:*	501			*North-South:*	530			*North-South:*	530			*North-South:*	530
			East-West:	793		*East-West:*	793			*East-West:*	829			*East-West:*	829			*East-West:*	829
			SUM:	1294		*SUM:*	1294			*SUM:*	1359			*SUM:*	1359			*SUM:*	1359
VOLUME/CAPACITY *(V/C)* RATIO:				0.941			0.941				0.988				0.988				0.988
V/C LESS ATSAC/ATCS ADJUSTMENT:				**0.841**			**0.841**				**0.888**				**0.888**				**0.888**
LEVEL OF SERVICE (LOS):				**D**			**D**				**D**				**D**				**D**

REMARKS: Alt. Route 4: Using only Cal-Mat Pit

Version: 1i Beta; 8/4/2011

PROJECT IMPACT

Change in *v/c* due to project:	0.000	Δ*v/c* after mitigation:	0.000
Significant impacted?	NO	Fully mitigated?	N/A

Level of Service Workheet
(Circular 212 Method)

I/S #:	North-South Street:	San Fernando Road	Year of Count:	2015	Ambient Growth: (%):	1.5	Conducted by:	City Traffic Counters	Date:	4/29/2015
CMA19	East-West Street:	Paxton Street	Projection Year:	2018	Peak Hour:	Mid-Day	Reviewed by:		Project:	Pacoima Reservoir Project/1-13-4

No. of Phases				4				4				4				4				4	
Opposed Ø'ing: N/S-1, E/W-2 or Both-3?				2				2				2				2				2	
Right Turns: FREE-1, NRTOR-2 or OLA-3?	NB--	0	SB--	3	NB--	0	SB--	3	NB--	0	SB--	3	NB--	0	SB--	3	NB--	0	SB--	3	
	EB--	3	WB--	2	EB--	3	WB--	2	EB--	3	WB--	2	EB--	3	WB--	2	EB--	3	WB--	2	
ATSAC-1 or ATSAC+ATCS-2?				2				2				2				2				2	
Override Capacity				0				0				0				0				0	

	MOVEMENT	EXISTING CONDITION			EXISTING PLUS PROJECT			FUTURE CONDITION W/O PROJECT				FUTURE CONDITION W/ PROJECT				FUTURE W/ PROJECT W/ MITIGATION			
		Volume	No. of Lanes	Lane Volume	Project Traffic	Total Volume	Lane Volume	Added Volume	Total Volume	No. of Lanes	Lane Volume	Added Volume	Total Volume	No. of Lanes	Lane Volume	Added Volume	Total Volume	No. of Lanes	Lane Volume
NORTHBOUND	Left	50	1	50	20	70	70	0	52	1	52	20	72	1	72	0	72	1	72
	Left-Through		0							0				0				0	
	Through	759	2	**380**	0	759	**380**	9	803	2	**402**	0	803	2	**402**	0	803	2	**402**
	Through-Right		0							0				0				0	
	Right	286	1	205	0	286	205	0	299	1	215	0	299	1	215	0	299	1	215
	Left-Through-Right		0							0				0				0	
	Left-Right		0							0				0				0	
SOUTHBOUND	Left	169	1	**169**	0	169	**169**	0	177	1	**177**	0	177	1	**177**	0	177	1	**177**
	Left-Through		0							0				0				0	
	Through	553	2	277	0	553	277	7	585	2	293	0	585	2	293	0	585	2	293
	Through-Right		0							0				0				0	
	Right	178	1	77	0	178	77	0	186	1	80	0	186	1	80	0	186	1	80
	Left-Through-Right		0							0				0				0	
	Left-Right		0							0				0				0	
EASTBOUND	Left	101	1	101	0	101	101	0	106	1	106	0	106	1	106	0	106	1	106
	Left-Through		0							0				0				0	
	Through	326	2	**163**	0	326	**163**	1	342	2	**171**	0	342	2	**171**	0	342	2	**171**
	Through-Right		0							0				0				0	
	Right	152	1	102	20	172	102	0	159	1	107	20	179	1	107	0	179	1	107
	Left-Through-Right		0							0				0				0	
	Left-Right		0							0				0				0	
WESTBOUND	Left	162	1	162	0	162	162	0	169	1	169	0	169	1	169	0	169	1	169
	Left-Through		0							0				0				0	
	Through	386	1	**371**	0	386	**371**	1	405	1	**389**	0	405	1	**389**	0	405	1	**389**
	Through-Right		1							1				1				1	
	Right	356	0	356	0	356	356	0	372	0	372	0	372	0	372	0	372	0	372
	Left-Through-Right		0							0				0				0	
	Left-Right		0							0				0				0	
CRITICAL VOLUMES			*North-South:*	549		*North-South:*	549		*North-South:*	579			*North-South:*	579			*North-South:*	579	
			East-West:	534		*East-West:*	534		*East-West:*	560			*East-West:*	560			*East-West:*	560	
			SUM:	1083		*SUM:*	1083		*SUM:*	1139			*SUM:*	1139			*SUM:*	1139	
VOLUME/CAPACITY *(V/C)* RATIO:				0.788			0.788				0.828				0.828				0.828
V/C LESS ATSAC/ATCS ADJUSTMENT:				**0.688**			**0.688**				**0.728**				**0.728**				**0.728**
LEVEL OF SERVICE (LOS):				**B**			**B**				**C**				**C**				**C**

REMARKS: Alt. Route 4: Using only Cal-Mat Pit

Version: 1i Beta; 8/4/2011

PROJECT IMPACT

Change in *v/c* due to project:	0.000	Δ*v/c* after mitigation:	0.000
Significant impacted?	NO	Fully mitigated?	N/A

Level of Service Workheet
(Circular 212 Method)

I/S #:	North-South Street:	San Fernando Road	Year of Count:	2015	Ambient Growth: (%):	1.5	Conducted by:	City Traffic Counters	Date:	4/29/2015
CMA19	East-West Street:	Paxton Street	Projection Year:	2018	Peak Hour:	PM	Reviewed by:		Project:	Pacoima Reservoir Project/1-13-4

No. of Phases				4				4				4				4				4		
Opposed Ø'ing: N/S-1, E/W-2 or Both-3?				2				2				2				2				2		
Right Turns: FREE-1, NRTOR-2 or OLA-3?	NB--	0	SB--	3	NB--	0	SB--	3	NB--	0	SB--	3	NB--	0	SB--	3	NB--	0	SB--	3		
	EB--	3	WB--	2	EB--	3	WB--	2	EB--	3	WB--	2	EB--	3	WB--	2	EB--	3	WB--	2		
ATSAC-1 or ATSAC+ATCS-2?				2				2				2				2				2		
Override Capacity				0				0				0				0				0		

	MOVEMENT	EXISTING CONDITION			EXISTING PLUS PROJECT			FUTURE CONDITION W/O PROJECT				FUTURE CONDITION W/ PROJECT				FUTURE W/ PROJECT W/ MITIGATION			
		Volume	No. of Lanes	Lane Volume	Project Traffic	Total Volume	Lane Volume	Added Volume	Total Volume	No. of Lanes	Lane Volume	Added Volume	Total Volume	No. of Lanes	Lane Volume	Added Volume	Total Volume	No. of Lanes	Lane Volume
NORTHBOUND	Left	45	1	45	20	65	65	0	47	1	47	20	67	1	67	0	67	1	67
	Left-Through		0							0				0				0	
	Through	715	2	**358**	0	715	**358**	14	762	2	**381**	0	762	2	**381**	0	762	2	**381**
	Through-Right		0							0				0				0	
	Right	293	1	214	0	293	214	0	306	1	223	0	306	1	223	0	306	1	223
	Left-Through-Right		0							0				0				0	
	Left-Right		0							0				0				0	
SOUTHBOUND	Left	139	1	**139**	0	139	**139**	0	145	1	**145**	0	145	1	**145**	0	145	1	**145**
	Left-Through		0							0				0				0	
	Through	727	2	364	0	727	364	10	770	2	385	0	770	2	385	0	770	2	385
	Through-Right		0							0				0				0	
	Right	169	1	48	0	169	48	0	177	1	50	0	177	1	50	0	177	1	50
	Left-Through-Right		0							0				0				0	
	Left-Right		0							0				0				0	
EASTBOUND	Left	121	1	121	0	121	121	0	127	1	127	0	127	1	127	0	127	1	127
	Left-Through		0							0				0				0	
	Through	642	2	**321**	0	642	**321**	1	672	2	**336**	0	672	2	**336**	0	672	2	**336**
	Through-Right		0							0				0				0	
	Right	191	1	146	20	211	146	0	200	1	153	20	220	1	153	0	220	1	153
	Left-Through-Right		0							0				0				0	
	Left-Right		0							0				0				0	
WESTBOUND	Left	159	1	159	0	159	159	0	166	1	166	0	166	1	166	0	166	1	166
	Left-Through		0							0				0				0	
	Through	556	1	**442**	0	556	**442**	1	582	1	**463**	0	582	1	**463**	0	582	1	**463**
	Through-Right		1							1				1				1	
	Right	328	0	328	0	328	328	0	343	0	343	0	343	0	343	0	343	0	343
	Left-Through-Right		0							0				0				0	
	Left-Right		0							0				0				0	
CRITICAL VOLUMES		*North-South:*		497	*North-South:*		497	*North-South:*			526	*North-South:*			526	*North-South:*			526
		East-West:		763	*East-West:*		763	*East-West:*			799	*East-West:*			799	*East-West:*			799
		SUM:		1260	*SUM:*		1260	*SUM:*			1325	*SUM:*			1325	*SUM:*			1325
VOLUME/CAPACITY *(V/C)* RATIO:				0.916			0.916				0.964				0.964				0.964
V/C LESS ATSAC/ATCS ADJUSTMENT:				**0.816**			**0.816**				**0.864**				**0.864**				**0.864**
LEVEL OF SERVICE (LOS):				**D**			**D**				**D**				**D**				**D**

REMARKS: Alt. Route 4: Using only Cal-Mat Pit

Version: 1i Beta; 8/4/2011

PROJECT IMPACT

Change in *v/c* due to project:	0.000	Δ*v/c* after mitigation:	0.000
Significant impacted?	NO	Fully mitigated?	N/A

Level of Service Workheet
(Circular 212 Method)

I/S #:	North-South Street:	San Fernando Road	Year of Count:	2015	Ambient Growth: (%):	1.5	Conducted by:	City Traffic Counters	Date:	4/29/2015
CMA20	East-West Street:	SR-118 Freeway EB Ramps	Projection Year:	2018	Peak Hour:	AM	Reviewed by:		Project:	Pacoima Reservoir Project/1-13-4

No. of Phases				2				2				2				2				2			
Opposed Ø'ing: N/S-1, E/W-2 or Both-3?				0				0				0				0				0			
Right Turns: FREE-1, NRTOR-2 or OLA-3?	NB--	0	SB--	3	NB--	0	SB--	3	NB--	0	SB--	3	NB--	0	SB--	3	NB--	0	SB--	3	NB--	0	SB--	3
	EB--	0	WB--	0	EB--	0	WB--	0	EB--	0	WB--	0	EB--	0	WB--	0	EB--	0	WB--	0	EB--	0	WB--	0
ATSAC-1 or ATSAC+ATCS-2?				2				2				2				2				2				2
Override Capacity				0				0				0				0				0				0

	MOVEMENT	EXISTING CONDITION			EXISTING PLUS PROJECT			FUTURE CONDITION W/O PROJECT				FUTURE CONDITION W/ PROJECT				FUTURE W/ PROJECT W/ MITIGATION			
		Volume	No. of Lanes	Lane Volume	Project Traffic	Total Volume	Lane Volume	Added Volume	Total Volume	No. of Lanes	Lane Volume	Added Volume	Total Volume	No. of Lanes	Lane Volume	Added Volume	Total Volume	No. of Lanes	Lane Volume
NORTHBOUND	Left	92	1	**92**	0	92	**92**	0	96	1	**96**	0	96	1	**96**	0	96	1	**96**
	Left-Through		0							0				0				0	
	Through	621	2	311	20	641	321	12	661	2	331	20	681	2	341	0	681	2	341
	Through-Right		0							0				0				0	
	Right	0	0	0	0	0	0	0	0	0	0	0	0	0	0	0	0	0	0
	Left-Through-Right		0							0				0				0	
	Left-Right		0							0				0				0	
SOUTHBOUND	Left	0	0	0	0	0	0	0	0	0	0	0	0	0	0	0	0	0	0
	Left-Through		0							0				0				0	
	Through	789	2	**395**	20	809	**405**	20	845	2	**423**	20	865	2	**433**	0	865	2	**433**
	Through-Right		0							0				0				0	
	Right	218	1	0	0	218	0	0	228	1	0	0	228	1	0	0	228	1	0
	Left-Through-Right		0							0				0				0	
	Left-Right		0							0				0				0	
EASTBOUND	Left	517	1	477	0	517	477	0	541	1	499	0	541	1	499	0	541	1	499
	Left-Through		0							0				0				0	
	Through	0	0	0	0	0	0	0	0	0	0	0	0	0	0	0	0	0	0
	Through-Right		0							0				0				0	
	Right	436	0	**477**	0	436	**477**	0	456	0	**499**	0	456	0	**499**	0	456	0	**499**
	Left-Through-Right		0							0				0				0	
	Left-Right		1							1				1				1	
WESTBOUND	Left	0	0	**0**	0	0	**0**	0	0	0	**0**	0	0	0	**0**	0	0	0	**0**
	Left-Through		0							0				0				0	
	Through	0	0	0	0	0	0	0	0	0	0	0	0	0	0	0	0	0	0
	Through-Right		0							0				0				0	
	Right	0	0	0	0	0	0	0	0	0	0	0	0	0	0	0	0	0	0
	Left-Through-Right		0							0				0				0	
	Left-Right		0							0				0				0	
CRITICAL VOLUMES		North-South:		487	North-South:		497	North-South:			519	North-South:			529	North-South:			529
		East-West:		477	East-West:		477	East-West:			499	East-West:			499	East-West:			499
		SUM:		964	SUM:		974	SUM:			1018	SUM:			1028	SUM:			1028
VOLUME/CAPACITY (V/C) RATIO:				0.643			0.649				0.679				0.685				0.685
V/C LESS ATSAC/ATCS ADJUSTMENT:				**0.543**			**0.549**				**0.579**				**0.585**				**0.585**
LEVEL OF SERVICE (LOS):				**A**			**A**				**A**				**A**				**A**

REMARKS: Alt. Route 4: Using only Cal-Mat Pit

Version: 1i Beta; 8/4/2011

PROJECT IMPACT

Change in *v/c* due to project:	0.006	Δ*v/c* after mitigation:	0.006
Significant impacted?	NO	Fully mitigated?	N/A

Level of Service Workheet
(Circular 212 Method)

I/S #:	North-South Street:	San Fernando Road	Year of Count:	2015	Ambient Growth: (%):	1.5	Conducted by:	City Traffic Counters	Date:	4/29/2015
CMA20	East-West Street:	SR-118 Freeway EB Ramps	Projection Year:	2018	Peak Hour:	Mid-Day	Reviewed by:		Project:	Pacoima Reservoir Project/1-13-4

No. of Phases				2				2				2				2				2			2
Opposed Ø'ing: N/S-1, E/W-2 or Both-3?				0				0				0				0				0			0
Right Turns: FREE-1, NRTOR-2 or OLA-3?	NB--	0	SB--	3	NB--	0	SB--	3	NB--	0	SB--	3	NB--	0	SB--	3	NB--	0	SB--	3	NB--	0	SB--	3
	EB--	0	WB--	0	EB--	0	WB--	0	EB--	0	WB--	0	EB--	0	WB--	0	EB--	0	WB--	0	EB--	0	WB--	0
ATSAC-1 or ATSAC+ATCS-2?				2				2				2				2				2			2
Override Capacity				0				0				0				0				0			0

	MOVEMENT	EXISTING CONDITION			EXISTING PLUS PROJECT			FUTURE CONDITION W/O PROJECT				FUTURE CONDITION W/ PROJECT				FUTURE W/ PROJECT W/ MITIGATION			
		Volume	No. of Lanes	Lane Volume	Project Traffic	Total Volume	Lane Volume	Added Volume	Total Volume	No. of Lanes	Lane Volume	Added Volume	Total Volume	No. of Lanes	Lane Volume	Added Volume	Total Volume	No. of Lanes	Lane Volume
NORTHBOUND	Left	68	1	**68**	0	68	**68**	0	71	1	**71**	0	71	1	**71**	0	71	1	**71**
	Left-Through		0							0				0				0	
	Through	625	2	313	20	645	323	9	663	2	332	20	683	2	342	0	683	2	342
	Through-Right		0							0				0				0	
	Right	0	0	0	0	0	0	0	0	0	0	0	0	0	0	0	0	0	0
	Left-Through-Right		0							0				0				0	
	Left-Right		0							0				0				0	
SOUTHBOUND	Left	0	0	0	0	0	0	0	0	0	0	0	0	0	0	0	0	0	0
	Left-Through		0							0				0				0	
	Through	644	2	**322**	20	664	**332**	7	680	2	**340**	20	700	2	**350**	0	700	2	**350**
	Through-Right		0							0				0				0	
	Right	176	1	0	0	176	0	0	184	1	0	0	184	1	0	0	184	1	0
	Left-Through-Right		0							0				0				0	
	Left-Right		0							0				0				0	
EASTBOUND	Left	525	1	343	0	525	343	0	549	1	359	0	549	1	359	0	549	1	359
	Left-Through		0							0				0				0	
	Through	0	0	0	0	0	0	0	0	0	0	0	0	0	0	0	0	0	0
	Through-Right		0							0				0				0	
	Right	161	0	**343**	0	161	**343**	0	168	0	**359**	0	168	0	**359**	0	168	0	**359**
	Left-Through-Right		0							0				0				0	
	Left-Right		1							1				1				1	
WESTBOUND	Left	0	0	**0**	0	0	**0**	0	0	0	**0**	0	0	0	**0**	0	0	0	**0**
	Left-Through		0							0				0				0	
	Through	0	0	0	0	0	0	0	0	0	0	0	0	0	0	0	0	0	0
	Through-Right		0							0				0				0	
	Right	0	0	0	0	0	0	0	0	0	0	0	0	0	0	0	0	0	0
	Left-Through-Right		0							0				0				0	
	Left-Right		0							0				0				0	
CRITICAL VOLUMES		*North-South:*		390	*North-South:*		400	*North-South:*			411	*North-South:*			421	*North-South:*			421
		East-West:		343	*East-West:*		343	*East-West:*			359	*East-West:*			359	*East-West:*			359
		SUM:		733	*SUM:*		743	*SUM:*			770	*SUM:*			780	*SUM:*			780
VOLUME/CAPACITY *(V/C)* RATIO:				0.489			0.495				0.513				0.520				0.520
V/C LESS ATSAC/ATCS ADJUSTMENT:				**0.389**			**0.395**				**0.413**				**0.420**				**0.420**
LEVEL OF SERVICE (LOS):				**A**			**A**				**A**				**A**				**A**

REMARKS: Alt. Route 4: Using only Cal-Mat Pit

Version: 1i Beta; 8/4/2011

PROJECT IMPACT

Change in *v/c* due to project:	0.007	Δ*v/c* after mitigation:	0.007
Significant impacted?	NO	Fully mitigated?	N/A

Level of Service Workheet
(Circular 212 Method)

I/S #:	North-South Street:	San Fernando Road	Year of Count:	2015	Ambient Growth: (%):	1.5	Conducted by:	City Traffic Counters	Date:	4/29/2015
CMA20	East-West Street:	SR-118 Freeway EB Ramps	Projection Year:	2018	Peak Hour:	PM	Reviewed by:		Project:	Pacoima Reservoir Project/1-13-4

No. of Phases				2				2				2				2				2			
Opposed Ø'ing: N/S-1, E/W-2 or Both-3?				0				0				0				0				0			
Right Turns: FREE-1, NRTOR-2 or OLA-3?	NB--	0	SB--	3	NB--	0	SB--	3	NB--	0	SB--	3	NB--	0	SB--	3	NB--	0	SB--	3	NB--	0	SB--	3
	EB--	0	WB--	0	EB--	0	WB--	0	EB--	0	WB--	0	EB--	0	WB--	0	EB--	0	WB--	0	EB--	0	WB--	0
ATSAC-1 or ATSAC+ATCS-2?				2				2				2				2				2				2
Override Capacity				0				0				0				0				0				0

	MOVEMENT	EXISTING CONDITION			EXISTING PLUS PROJECT			FUTURE CONDITION W/O PROJECT				FUTURE CONDITION W/ PROJECT				FUTURE W/ PROJECT W/ MITIGATION			
		Volume	No. of Lanes	Lane Volume	Project Traffic	Total Volume	Lane Volume	Added Volume	Total Volume	No. of Lanes	Lane Volume	Added Volume	Total Volume	No. of Lanes	Lane Volume	Added Volume	Total Volume	No. of Lanes	Lane Volume
NORTHBOUND	Left	124	1	**124**	0	124	**124**	0	130	1	**130**	0	130	1	**130**	0	130	1	**130**
	Left-Through		0							0				0				0	
	Through	803	2	402	20	823	412	14	854	2	427	20	874	2	437	0	874	2	437
	Through-Right		0							0				0				0	
	Right	0	0	0	0	0	0	0	0	0	0	0	0	0	0	0	0	0	0
	Left-Through-Right		0							0				0				0	
	Left-Right		0							0				0				0	
SOUTHBOUND	Left	0	0	0	0	0	0	0	0	0	0	0	0	0	0	0	0	0	0
	Left-Through		0							0				0				0	
	Through	826	2	**413**	20	846	**423**	10	874	2	**437**	20	894	2	**447**	0	894	2	**447**
	Through-Right		0							0				0				0	
	Right	256	1	0	0	256	0	0	268	1	0	0	268	1	0	0	268	1	0
	Left-Through-Right		0							0				0				0	
	Left-Right		0							0				0				0	
EASTBOUND	Left	500	1	375	0	500	375	0	523	1	392	0	523	1	392	0	523	1	392
	Left-Through		0							0				0				0	
	Through	0	0	0	0	0	0	0	0	0	0	0	0	0	0	0	0	0	0
	Through-Right		0							0				0				0	
	Right	250	0	**375**	0	250	**375**	0	261	0	**392**	0	261	0	**392**	0	261	0	**392**
	Left-Through-Right		0							0				0				0	
	Left-Right		1							1				1				1	
WESTBOUND	Left	0	0	**0**	0	0	**0**	0	0	0	**0**	0	0	0	**0**	0	0	0	**0**
	Left-Through		0							0				0				0	
	Through	0	0	0	0	0	0	0	0	0	0	0	0	0	0	0	0	0	0
	Through-Right		0							0				0				0	
	Right	0	0	0	0	0	0	0	0	0	0	0	0	0	0	0	0	0	0
	Left-Through-Right		0							0				0				0	
	Left-Right		0							0				0				0	
CRITICAL VOLUMES		North-South:		537	North-South:		547	North-South:			567	North-South:			577	North-South:			577
		East-West:		375	East-West:		375	East-West:			392	East-West:			392	East-West:			392
		SUM:		912	SUM:		922	SUM:			959	SUM:			969	SUM:			969
VOLUME/CAPACITY (V/C) RATIO:				0.608			0.615				0.639				0.646				0.646
V/C LESS ATSAC/ATCS ADJUSTMENT:				**0.508**			**0.515**				**0.539**				**0.546**				**0.546**
LEVEL OF SERVICE (LOS):				**A**			**A**				**A**				**A**				**A**

REMARKS: Alt. Route 4: Using only Cal-Mat Pit

Version: 1i Beta; 8/4/2011

PROJECT IMPACT

Change in *v/c* due to project:	0.007	Δ*v/c* after mitigation:	0.007
Significant impacted?	NO	Fully mitigated?	N/A

Level of Service Workheet
(Circular 212 Method)

I/S #:	North-South Street:	San Fernando Road	Year of Count:	2015	Ambient Growth: (%):	1.5	Conducted by:	City Traffic Counters	Date:	4/29/2015
CMA21	East-West Street:	Van Nuys Boulevard	Projection Year:	2018	Peak Hour:	AM	Reviewed by:		Project:	Pacoima Reservoir Project/1-13-4

No. of Phases				4				4				4				4				4			4
Opposed Ø'ing: N/S-1, E/W-2 or Both-3?				0				0				0				0				0			0
Right Turns: FREE-1, NRTOR-2 or OLA-3?	NB--	0	SB--	0	NB--	0	SB--	0	NB--	0	SB--	0	NB--	0	SB--	0	NB--	0	SB--	0	NB--	0	SB--	0
	EB--	3	WB--	2	EB--	3	WB--	2	EB--	3	WB--	2	EB--	3	WB--	2	EB--	3	WB--	2	EB--	3	WB--	2
ATSAC-1 or ATSAC+ATCS-2?				2				2				2				2				2				2
Override Capacity				0				0				0				0				0				0

	MOVEMENT	EXISTING CONDITION			EXISTING PLUS PROJECT			FUTURE CONDITION W/O PROJECT				FUTURE CONDITION W/ PROJECT				FUTURE W/ PROJECT W/ MITIGATION			
		Volume	No. of Lanes	Lane Volume	Project Traffic	Total Volume	Lane Volume	Added Volume	Total Volume	No. of Lanes	Lane Volume	Added Volume	Total Volume	No. of Lanes	Lane Volume	Added Volume	Total Volume	No. of Lanes	Lane Volume
NORTHBOUND	Left	41	1	**41**	0	41	**41**	2	45	1	**45**	0	45	1	**45**	0	45	1	**45**
	Left-Through		0							0				0				0	
	Through	475	1	309	20	495	319	11	508	1	329	20	528	1	339	0	528	1	339
	Through-Right		1							1				1				1	
	Right	143	0	143	0	143	143	0	150	0	150	0	150	0	150	0	150	0	150
	Left-Through-Right		0							0				0				0	
	Left-Right		0							0				0				0	
SOUTHBOUND	Left	183	1	183	0	183	183	0	191	1	191	0	191	1	191	0	191	1	191
	Left-Through		0							0				0				0	
	Through	949	1	**511**	20	969	**521**	19	1011	1	**544**	20	1031	1	**554**	0	1031	1	**554**
	Through-Right		1							1				1				1	
	Right	72	0	72	0	72	72	1	76	0	76	0	76	0	76	0	76	0	76
	Left-Through-Right		0							0				0				0	
	Left-Right		0							0				0				0	
EASTBOUND	Left	111	1	111	0	111	111	1	117	1	117	0	117	1	117	0	117	1	117
	Left-Through		0							0				0				0	
	Through	858	2	**429**	0	858	**429**	24	921	2	**461**	0	921	2	**461**	0	921	2	**461**
	Through-Right		0							0				0				0	
	Right	51	1	10	0	51	10	1	54	1	9	0	54	1	9	0	54	1	9
	Left-Through-Right		0							0				0				0	
	Left-Right		0							0				0				0	
WESTBOUND	Left	216	1	**216**	0	216	**216**	0	226	1	**226**	0	226	1	**226**	0	226	1	**226**
	Left-Through		0							0				0				0	
	Through	807	2	404	0	807	404	20	864	2	432	0	864	2	432	0	864	2	432
	Through-Right		0							0				0				0	
	Right	106	1	106	0	106	106	0	111	1	111	0	111	1	111	0	111	1	111
	Left-Through-Right		0							0				0				0	
	Left-Right		0							0				0				0	
CRITICAL VOLUMES		*North-South:*		552	*North-South:*		562	*North-South:*			589	*North-South:*			599	*North-South:*			599
		East-West:		645	*East-West:*		645	*East-West:*			687	*East-West:*			687	*East-West:*			687
		SUM:		1197	*SUM:*		1207	*SUM:*			1276	*SUM:*			1286	*SUM:*			1286
VOLUME/CAPACITY *(V/C)* RATIO:				0.871			0.878				0.928				0.935				0.935
V/C LESS ATSAC/ATCS ADJUSTMENT:				**0.771**			**0.778**				**0.828**				**0.835**				**0.835**
LEVEL OF SERVICE (LOS):				**C**			**C**				**D**				**D**				**D**

REMARKS: Alt. Route 4: Using only Cal-Mat Pit

Version: 1i Beta; 8/4/2011

PROJECT IMPACT

Change in *v/c* due to project:	0.007	Δ*v/c* after mitigation:	0.007
Significant impacted?	NO	Fully mitigated?	N/A

Level of Service Workheet
(Circular 212 Method)

I/S #:	North-South Street:	San Fernando Road	Year of Count:	2015	Ambient Growth: (%):	1.5	Conducted by:	City Traffic Counters	Date:	4/29/2015
CMA21	East-West Street:	Van Nuys Boulevard	Projection Year:	2018	Peak Hour:	Mid-Day	Reviewed by:		Project:	Pacoima Reservoir Project/1-13-4

No. of Phases				4				4				4				4				4			
Opposed Ø'ing: N/S-1, E/W-2 or Both-3?				0				0				0				0				0			
Right Turns: FREE-1, NRTOR-2 or OLA-3?	NB--	0	SB--	0	NB--	0	SB--	0	NB--	0	SB--	0	NB--	0	SB--	0	NB--	0	SB--	0			
	EB--	3	WB--	2	EB--	3	WB--	2	EB--	3	WB--	2	EB--	3	WB--	2	EB--	3	WB--	2			
ATSAC-1 or ATSAC+ATCS-2?				2				2				2				2				2			
Override Capacity				0				0				0				0				0			

	MOVEMENT	EXISTING CONDITION			EXISTING PLUS PROJECT			FUTURE CONDITION W/O PROJECT				FUTURE CONDITION W/ PROJECT				FUTURE W/ PROJECT W/ MITIGATION			
		Volume	No. of Lanes	Lane Volume	Project Traffic	Total Volume	Lane Volume	Added Volume	Total Volume	No. of Lanes	Lane Volume	Added Volume	Total Volume	No. of Lanes	Lane Volume	Added Volume	Total Volume	No. of Lanes	Lane Volume
NORTHBOUND	Left	58	1	58	0	58	58	2	63	1	63	0	63	1	63	0	63	1	63
	Left-Through		0							0				0				0	
	Through	460	1	**273**	20	480	**283**	8	489	1	**290**	20	509	1	**300**	0	509	1	**300**
	Through-Right		1							1				1				1	
	Right	86	0	86	0	86	86	0	90	0	90	0	90	0	90	0	90	0	90
	Left-Through-Right		0							0				0				0	
	Left-Right		0							0				0				0	
SOUTHBOUND	Left	97	1	**97**	0	97	**97**	0	101	1	**101**	0	101	1	**101**	0	101	1	**101**
	Left-Through		0							0				0				0	
	Through	435	1	282	20	455	292	6	461	1	299	20	481	1	309	0	481	1	309
	Through-Right		1							1				1				1	
	Right	129	0	129	0	129	129	1	136	0	136	0	136	0	136	0	136	0	136
	Left-Through-Right		0							0				0				0	
	Left-Right		0							0				0				0	
EASTBOUND	Left	117	1	**117**	0	117	**117**	1	123	1	**123**	0	123	1	**123**	0	123	1	**123**
	Left-Through		0							0				0				0	
	Through	680	2	340	0	680	340	1	712	2	356	0	712	2	356	0	712	2	356
	Through-Right		0							0				0				0	
	Right	92	1	34	0	92	34	1	97	1	34	0	97	1	34	0	97	1	34
	Left-Through-Right		0							0				0				0	
	Left-Right		0							0				0				0	
WESTBOUND	Left	71	1	71	0	71	71	0	74	1	74	0	74	1	74	0	74	1	74
	Left-Through		0							0				0				0	
	Through	605	2	**303**	0	605	**303**	1	634	2	**317**	0	634	2	**317**	0	634	2	**317**
	Through-Right		0							0				0				0	
	Right	81	1	81	0	81	81	0	85	1	85	0	85	1	85	0	85	1	85
	Left-Through-Right		0							0				0				0	
	Left-Right		0							0				0				0	
CRITICAL VOLUMES		*North-South:*		370	*North-South:*		380	*North-South:*			391	*North-South:*			401	*North-South:*			401
		East-West:		420	*East-West:*		420	*East-West:*			440	*East-West:*			440	*East-West:*			440
		SUM:		790	*SUM:*		800	*SUM:*			831	*SUM:*			841	*SUM:*			841
VOLUME/CAPACITY *(V/C)* RATIO:				0.575			0.582				0.604				0.612				0.612
V/C LESS ATSAC/ATCS ADJUSTMENT:				**0.475**			**0.482**				**0.504**				**0.512**				**0.512**
LEVEL OF SERVICE (LOS):				**A**			**A**				**A**				**A**				**A**

REMARKS: Alt. Route 4: Using only Cal-Mat Pit

Version: 1i Beta; 8/4/2011

PROJECT IMPACT

Change in *v/c* due to project:	0.008	Δ*v/c* after mitigation:	0.008
Significant impacted?	NO	Fully mitigated?	N/A

Level of Service Workheet
(Circular 212 Method)

I/S #:	North-South Street:	San Fernando Road	Year of Count:	2015	Ambient Growth: (%):	1.5	Conducted by:	City Traffic Counters	Date:	4/29/2015
CMA21	East-West Street:	Van Nuys Boulevard	Projection Year:	2018	Peak Hour:	PM	Reviewed by:		Project:	Pacoima Reservoir Project/1-13-4

No. of Phases				4				4				4				4				4			
Opposed Ø'ing: N/S-1, E/W-2 or Both-3?				0				0				0				0				0			
Right Turns: FREE-1, NRTOR-2 or OLA-3?	NB--	0	SB--	0	NB--	0	SB--	0	NB--	0	SB--	0	NB--	0	SB--	0	NB--	0	SB--	0			
	EB--	3	WB--	2	EB--	3	WB--	2	EB--	3	WB--	2	EB--	3	WB--	2	EB--	3	WB--	2			
ATSAC-1 or ATSAC+ATCS-2?				2				2				2				2				2			
Override Capacity				0				0				0				0				0			

	MOVEMENT	EXISTING CONDITION			EXISTING PLUS PROJECT			FUTURE CONDITION W/O PROJECT				FUTURE CONDITION W/ PROJECT				FUTURE W/ PROJECT W/ MITIGATION			
		Volume	No. of Lanes	Lane Volume	Project Traffic	Total Volume	Lane Volume	Added Volume	Total Volume	No. of Lanes	Lane Volume	Added Volume	Total Volume	No. of Lanes	Lane Volume	Added Volume	Total Volume	No. of Lanes	Lane Volume
NORTHBOUND	Left	85	1	85	0	85	85	2	91	1	91	0	91	1	91	0	91	1	91
	Left-Through		0							0				0				0	
	Through	628	1	**365**	20	648	**375**	13	670	1	**389**	20	690	1	**399**	0	690	1	**399**
	Through-Right		1							1				1				1	
	Right	102	0	102	0	102	102	0	107	0	107	0	107	0	107	0	107	0	107
	Left-Through-Right		0							0				0				0	
	Left-Right		0							0				0				0	
SOUTHBOUND	Left	139	1	**139**	0	139	**139**	0	145	1	**145**	0	145	1	**145**	0	145	1	**145**
	Left-Through		0							0				0				0	
	Through	575	1	365	20	595	375	9	610	1	387	20	630	1	397	0	630	1	397
	Through-Right		1							1				1				1	
	Right	155	0	155	0	155	155	1	163	0	163	0	163	0	163	0	163	0	163
	Left-Through-Right		0							0				0				0	
	Left-Right		0							0				0				0	
EASTBOUND	Left	82	1	82	0	82	82	1	87	1	87	0	87	1	87	0	87	1	87
	Left-Through		0							0				0				0	
	Through	848	2	**424**	0	848	**424**	14	901	2	**451**	0	901	2	**451**	0	901	2	**451**
	Through-Right		0							0				0				0	
	Right	112	1	27	0	112	27	1	118	1	27	0	118	1	27	0	118	1	27
	Left-Through-Right		0							0				0				0	
	Left-Right		0							0				0				0	
WESTBOUND	Left	115	1	**115**	0	115	**115**	0	120	1	**120**	0	120	1	**120**	0	120	1	**120**
	Left-Through		0							0				0				0	
	Through	889	2	445	0	889	445	15	945	2	473	0	945	2	473	0	945	2	473
	Through-Right		0							0				0				0	
	Right	107	1	107	0	107	107	0	112	1	112	0	112	1	112	0	112	1	112
	Left-Through-Right		0							0				0				0	
	Left-Right		0							0				0				0	
CRITICAL VOLUMES		*North-South:*		504	*North-South:*		514	*North-South:*			534	*North-South:*			544	*North-South:*			544
		East-West:		539	*East-West:*		539	*East-West:*			571	*East-West:*			571	*East-West:*			571
		SUM:		1043	*SUM:*		1053	*SUM:*			1105	*SUM:*			1115	*SUM:*			1115
VOLUME/CAPACITY *(V/C)* RATIO:				0.759			0.766				0.804				0.811				0.811
V/C LESS ATSAC/ATCS ADJUSTMENT:				**0.659**			**0.666**				**0.704**				**0.711**				**0.711**
LEVEL OF SERVICE (LOS):				**B**			**B**				**C**				**C**				**C**

REMARKS: Alt. Route 4: Using only Cal-Mat Pit

Version: 1i Beta; 8/4/2011

PROJECT IMPACT

Change in *v/c* due to project:	0.007	Δ*v/c* after mitigation:	0.007
Significant impacted?	NO	Fully mitigated?	N/A

Level of Service Workheet
(Circular 212 Method)

I/S #:	North-South Street:	San Fernando Road	Year of Count:	2015	Ambient Growth: (%):	1.5	Conducted by:	City Traffic Counters	Date:	4/29/2015
CMA22	East-West Street:	Pierce Street	Projection Year:	2018	Peak Hour:	AM	Reviewed by:		Project:	Pacoima Reservoir Project/1-13-4

No. of Phases				4				4				4				4				4		
Opposed Ø'ing: N/S-1, E/W-2 or Both-3?				2				2				2				2				2		
Right Turns: FREE-1, NRTOR-2 or OLA-3?	NB--	0	SB--	0	NB--	0	SB--	0	NB--	0	SB--	0	NB--	0	SB--	0	NB--	0	SB--	0		
	EB--	0	WB--	2	EB--	0	WB--	2	EB--	0	WB--	2	EB--	0	WB--	2	EB--	0	WB--	2		
ATSAC-1 or ATSAC+ATCS-2?				2				2				2				2				2		
Override Capacity				0				0				0				0				0		

	MOVEMENT	EXISTING CONDITION			EXISTING PLUS PROJECT			FUTURE CONDITION W/O PROJECT				FUTURE CONDITION W/ PROJECT				FUTURE W/ PROJECT W/ MITIGATION			
		Volume	No. of Lanes	Lane Volume	Project Traffic	Total Volume	Lane Volume	Added Volume	Total Volume	No. of Lanes	Lane Volume	Added Volume	Total Volume	No. of Lanes	Lane Volume	Added Volume	Total Volume	No. of Lanes	Lane Volume
NORTHBOUND	Left	35	1	**35**	0	35	**35**	0	37	1	**37**	0	37	1	**37**	0	37	1	**37**
	Left-Through		0							0				0				0	
	Through	510	1	342	20	530	352	13	546	1	372	20	566	1	382	0	566	1	382
	Through-Right		1							1				1				1	
	Right	174	0	174	0	174	174	15	197	0	197	0	197	0	197	0	197	0	197
	Left-Through-Right		0							0				0				0	
	Left-Right		0							0				0				0	
SOUTHBOUND	Left	31	1	31	0	31	31	0	32	1	32	0	32	1	32	0	32	1	32
	Left-Through		0							0				0				0	
	Through	1135	2	**568**	20	1155	**578**	20	1207	2	**604**	20	1227	2	**614**	0	1227	2	**614**
	Through-Right		0							0				0				0	
	Right	90	1	55	0	90	55	0	94	1	58	0	94	1	58	0	94	1	58
	Left-Through-Right		0							0				0				0	
	Left-Right		0							0				0				0	
EASTBOUND	Left	70	0	70	0	70	70	0	73	0	73	0	73	0	73	0	73	0	73
	Left-Through		0							0				0				0	
	Through	137	0	**247**	0	137	**247**	23	166	0	**281**	0	166	0	**281**	0	166	0	**281**
	Through-Right		0							0				0				0	
	Right	40	0	0	0	40	0	0	42	0	0	0	42	0	0	0	42	0	0
	Left-Through-Right		1							1				1				1	
	Left-Right		0							0				0				0	
WESTBOUND	Left	196	0	196	0	196	196	13	218	0	218	0	218	0	218	0	218	0	218
	Left-Through		0							0				0				0	
	Through	137	0	**379**	0	137	**379**	19	162	0	**428**	0	162	0	**428**	0	162	0	**428**
	Through-Right		0							0				0				0	
	Right	46	0	0	0	46	0	0	48	0	0	0	48	0	0	0	48	0	0
	Left-Through-Right		1							1				1				1	
	Left-Right		0							0				0				0	
CRITICAL VOLUMES		*North-South:*		603	*North-South:*		613	*North-South:*			641	*North-South:*			651	*North-South:*			651
		East-West:		626	*East-West:*		626	*East-West:*			709	*East-West:*			709	*East-West:*			709
		SUM:		1229	*SUM:*		1239	*SUM:*			1350	*SUM:*			1360	*SUM:*			1360
VOLUME/CAPACITY *(V/C)* RATIO:				0.894			0.901				0.982				0.989				0.989
V/C LESS ATSAC/ATCS ADJUSTMENT:				**0.794**			**0.801**				**0.882**				**0.889**				**0.889**
LEVEL OF SERVICE (LOS):				**C**			**D**				**D**				**D**				**D**

REMARKS: Alt. Route 4: Using only Cal-Mat Pit

Version: 1i Beta; 8/4/2011

PROJECT IMPACT

Change in *v/c* due to project:	0.007	Δ*v/c* after mitigation:	0.007
Significant impacted?	NO	Fully mitigated?	N/A

Level of Service Workheet
(Circular 212 Method)

I/S #:	North-South Street:	San Fernando Road	Year of Count:	2015	Ambient Growth: (%):	1.5	Conducted by:	City Traffic Counters	Date:	4/29/2015
CMA22	East-West Street:	Pierce Street	Projection Year:	2018	Peak Hour:	Mid-Day	Reviewed by:		Project:	Pacoima Reservoir Project/1-13-4

No. of Phases				4				4				4				4				4			4
Opposed Ø'ing: N/S-1, E/W-2 or Both-3?				2				2				2				2				2			2
Right Turns: FREE-1, NRTOR-2 or OLA-3?	NB--	0	SB--	0	NB--	0	SB--	0	NB--	0	SB--	0	NB--	0	SB--	0	NB--	0	SB--	0	NB--	0	SB--	0
	EB--	0	WB--	2	EB--	0	WB--	2	EB--	0	WB--	2	EB--	0	WB--	2	EB--	0	WB--	2	EB--	0	WB--	2
ATSAC-1 or ATSAC+ATCS-2?				2				2				2				2				2				2
Override Capacity				0				0				0				0				0				0

MOVEMENT		EXISTING CONDITION			EXISTING PLUS PROJECT			FUTURE CONDITION W/O PROJECT				FUTURE CONDITION W/ PROJECT				FUTURE W/ PROJECT W/ MITIGATION			
		Volume	No. of Lanes	Lane Volume	Project Traffic	Total Volume	Lane Volume	Added Volume	Total Volume	No. of Lanes	Lane Volume	Added Volume	Total Volume	No. of Lanes	Lane Volume	Added Volume	Total Volume	No. of Lanes	Lane Volume
NORTHBOUND	Left	24	1	24	0	24	24	0	25	1	25	0	25	1	25	0	25	1	25
	Left-Through		0							0				0				0	
	Through	506	1	**305**	20	526	**315**	10	539	1	**324**	20	559	1	**334**	0	559	1	**334**
	Through-Right		1							1				1				1	
	Right	103	0	103	0	103	103	0	108	0	108	0	108	0	108	0	108	0	108
	Left-Through-Right		0							0				0				0	
	Left-Right		0							0				0				0	
SOUTHBOUND	Left	35	1	**35**	0	35	**35**	0	37	1	**37**	0	37	1	**37**	0	37	1	**37**
	Left-Through		0							0				0				0	
	Through	549	2	275	20	569	285	7	581	2	291	20	601	2	301	0	601	2	301
	Through-Right		0							0				0				0	
	Right	88	1	59	0	88	59	0	92	1	62	0	92	1	62	0	92	1	62
	Left-Through-Right		0							0				0				0	
	Left-Right		0							0				0				0	
EASTBOUND	Left	58	0	58	0	58	58	0	61	0	61	0	61	0	61	0	61	0	61
	Left-Through		0							0				0				0	
	Through	75	0	**158**	0	75	**158**	0	78	0	**165**	0	78	0	**165**	0	78	0	**165**
	Through-Right		0							0				0				0	
	Right	25	0	0	0	25	0	0	26	0	0	0	26	0	0	0	26	0	0
	Left-Through-Right		1							1				1				1	
	Left-Right		0							0				0				0	
WESTBOUND	Left	80	0	80	0	80	80	0	84	0	84	0	84	0	84	0	84	0	84
	Left-Through		0							0				0				0	
	Through	50	0	**160**	0	50	**160**	0	52	0	**167**	0	52	0	**167**	0	52	0	**167**
	Through-Right		0							0				0				0	
	Right	30	0	0	0	30	0	0	31	0	0	0	31	0	0	0	31	0	0
	Left-Through-Right		1							1				1				1	
	Left-Right		0							0				0				0	
CRITICAL VOLUMES			*North-South:*	340		*North-South:*	350		*North-South:*	361			*North-South:*	371			*North-South:*	371	
			East-West:	318		*East-West:*	318		*East-West:*	332			*East-West:*	332			*East-West:*	332	
			SUM:	658		*SUM:*	668		*SUM:*	693			*SUM:*	703			*SUM:*	703	
VOLUME/CAPACITY *(V/C)* RATIO:				0.479			0.486				0.504				0.511				0.511
V/C LESS ATSAC/ATCS ADJUSTMENT:				**0.379**			**0.386**				**0.404**				**0.411**				**0.411**
LEVEL OF SERVICE (LOS):				**A**			**A**				**A**				**A**				**A**

REMARKS: Alt. Route 4: Using only Cal-Mat Pit

Version: 1i Beta; 8/4/2011

PROJECT IMPACT

Change in *v/c* due to project:	0.007	Δ*v/c* after mitigation:	0.007
Significant impacted?	NO	Fully mitigated?	N/A

Level of Service Workheet
(Circular 212 Method)

I/S #:	North-South Street:	San Fernando Road	Year of Count:	2015	Ambient Growth: (%):	1.5	Conducted by:	City Traffic Counters	Date:	4/29/2015
CMA22	East-West Street:	Pierce Street	Projection Year:	2018	Peak Hour:	PM	Reviewed by:		Project:	Pacoima Reservoir Project/1-13-4

No. of Phases				4				4				4				4				4			4
Opposed Ø'ing: N/S-1, E/W-2 or Both-3?				2				2				2				2				2			2
Right Turns: FREE-1, NRTOR-2 or OLA-3?	NB--	0	SB--	0	NB--	0	SB--	0	NB--	0	SB--	0	NB--	0	SB--	0	NB--	0	SB--	0	NB--	0	SB--	0
	EB--	0	WB--	2	EB--	0	WB--	2	EB--	0	WB--	2	EB--	0	WB--	2	EB--	0	WB--	2	EB--	0	WB--	2
ATSAC-1 or ATSAC+ATCS-2?				2				2				2				2				2				2
Override Capacity				0				0				0				0				0				0

MOVEMENT		EXISTING CONDITION			EXISTING PLUS PROJECT			FUTURE CONDITION W/O PROJECT				FUTURE CONDITION W/ PROJECT				FUTURE W/ PROJECT W/ MITIGATION			
		Volume	No. of Lanes	Lane Volume	Project Traffic	Total Volume	Lane Volume	Added Volume	Total Volume	No. of Lanes	Lane Volume	Added Volume	Total Volume	No. of Lanes	Lane Volume	Added Volume	Total Volume	No. of Lanes	Lane Volume
NORTHBOUND	Left	45	1	45	0	45	45	0	47	1	47	0	47	1	47	0	47	1	47
	Left-Through		0							0				0				0	
	Through	772	1	**482**	20	792	**492**	15	822	1	**516**	20	842	1	**526**	0	842	1	**526**
	Through-Right		1							1				1				1	
	Right	191	0	191	0	191	191	9	209	0	209	0	209	0	209	0	209	0	209
	Left-Through-Right		0							0				0				0	
	Left-Right		0							0				0				0	
SOUTHBOUND	Left	43	1	**43**	0	43	**43**	0	45	1	**45**	0	45	1	**45**	0	45	1	**45**
	Left-Through		0							0				0				0	
	Through	658	2	329	20	678	339	10	698	2	349	20	718	2	359	0	718	2	359
	Through-Right		0							0				0				0	
	Right	100	1	67	0	100	67	0	105	1	71	0	105	1	71	0	105	1	71
	Left-Through-Right		0							0				0				0	
	Left-Right		0							0				0				0	
EASTBOUND	Left	66	0	66	0	66	66	0	69	0	69	0	69	0	69	0	69	0	69
	Left-Through		0							0				0				0	
	Through	129	0	**239**	0	129	**239**	13	148	0	**263**	0	148	0	**263**	0	148	0	**263**
	Through-Right		0							0				0				0	
	Right	44	0	0	0	44	0	0	46	0	0	0	46	0	0	0	46	0	0
	Left-Through-Right		1							1				1				1	
	Left-Right		0							0				0				0	
WESTBOUND	Left	138	0	138	0	138	138	10	154	0	154	0	154	0	154	0	154	0	154
	Left-Through		0							0				0				0	
	Through	120	0	**314**	0	120	**314**	14	139	0	**352**	0	139	0	**352**	0	139	0	**352**
	Through-Right		0							0				0				0	
	Right	56	0	0	0	56	0	0	59	0	0	0	59	0	0	0	59	0	0
	Left-Through-Right		1							1				1				1	
	Left-Right		0							0				0				0	
CRITICAL VOLUMES			*North-South:*	525		*North-South:*	535		*North-South:*	561			*North-South:*	571			*North-South:*	571	
			East-West:	553		*East-West:*	553		*East-West:*	615			*East-West:*	615			*East-West:*	615	
			SUM:	1078		*SUM:*	1088		*SUM:*	1176			*SUM:*	1186			*SUM:*	1186	
VOLUME/CAPACITY *(V/C)* RATIO:				0.784			0.791				0.855				0.863				0.863
V/C LESS ATSAC/ATCS ADJUSTMENT:				**0.684**			**0.691**				**0.755**				**0.763**				**0.763**
LEVEL OF SERVICE (LOS):				**B**			**B**				**C**				**C**				**C**

REMARKS: Alt. Route 4: Using only Cal-Mat Pit

Version: 1i Beta; 8/4/2011

PROJECT IMPACT

Change in *v/c* due to project:	0.008	Δ*v/c* after mitigation:	0.008
Significant impacted?	NO	Fully mitigated?	N/A

Level of Service Workheet
(Circular 212 Method)

I/S #:	North-South Street:	San Fernando Road	Year of Count:	2015	Ambient Growth: (%):	1.5	Conducted by:	City Traffic Counters	Date:	4/29/2015
CMA23	East-West Street:	Terra Bella Street	Projection Year:	2018	Peak Hour:	AM	Reviewed by:		Project:	Pacoima Reservoir Project/1-13-4

No. of Phases				2				2				2				2				2			
Opposed Ø'ing: N/S-1, E/W-2 or Both-3?				0				0				0				0				0			
Right Turns: FREE-1, NRTOR-2 or OLA-3?	NB--	0	SB--	0	NB--	0	SB--	0	NB--	0	SB--	0	NB--	0	SB--	0	NB--	0	SB--	0			
	EB--	0	WB--	0	EB--	0	WB--	0	EB--	0	WB--	0	EB--	0	WB--	0	EB--	0	WB--	0			
ATSAC-1 or ATSAC+ATCS-2?				2				2				2				2				2			
Override Capacity				0				0				0				0				0			

	MOVEMENT	EXISTING CONDITION			EXISTING PLUS PROJECT			FUTURE CONDITION W/O PROJECT				FUTURE CONDITION W/ PROJECT				FUTURE W/ PROJECT W/ MITIGATION			
		Volume	No. of Lanes	Lane Volume	Project Traffic	Total Volume	Lane Volume	Added Volume	Total Volume	No. of Lanes	Lane Volume	Added Volume	Total Volume	No. of Lanes	Lane Volume	Added Volume	Total Volume	No. of Lanes	Lane Volume
NORTHBOUND	Left	54	1	**54**	0	54	**54**	0	56	1	**56**	0	56	1	**56**	0	56	1	**56**
	Left-Through		0							0				0				0	
	Through	485	2	243	20	505	253	14	521	2	261	20	541	2	271	0	541	2	271
	Through-Right		0							0				0				0	
	Right	0	0	0	0	0	0	0	0	0	0	0	0	0	0	0	0	0	0
	Left-Through-Right		0							0				0				0	
	Left-Right		0							0				0				0	
SOUTHBOUND	Left	0	0	0	0	0	0	0	0	0	0	0	0	0	0	0	0	0	0
	Left-Through		0							0				0				0	
	Through	1224	1	**717**	20	1244	**727**	15	1295	1	**766**	20	1315	1	**776**	0	1315	1	**776**
	Through-Right		1							1				1				1	
	Right	210	0	210	0	210	210	17	237	0	237	0	237	0	237	0	237	0	237
	Left-Through-Right		0							0				0				0	
	Left-Right		0							0				0				0	
EASTBOUND	Left	239	1	**239**	0	239	**239**	15	265	1	**265**	0	265	1	**265**	0	265	1	**265**
	Left-Through		0							0				0				0	
	Through	0	0	0	0	0	0	0	0	0	0	0	0	0	0	0	0	0	0
	Through-Right		0							0				0				0	
	Right	116	1	89	0	116	89	0	121	1	93	0	121	1	93	0	121	1	93
	Left-Through-Right		0							0				0				0	
	Left-Right		0							0				0				0	
WESTBOUND	Left	0	0	0	0	0	0	0	0	0	0	0	0	0	0	0	0	0	0
	Left-Through		0							0				0				0	
	Through	0	0	**0**	0	0	**0**	0	0	0	**0**	0	0	0	**0**	0	0	0	**0**
	Through-Right		0							0				0				0	
	Right	0	0	0	0	0	0	0	0	0	0	0	0	0	0	0	0	0	0
	Left-Through-Right		0							0				0				0	
	Left-Right		0							0				0				0	
CRITICAL VOLUMES		*North-South:*		771	*North-South:*		781	*North-South:*			822	*North-South:*			832	*North-South:*			832
		East-West:		239	*East-West:*		239	*East-West:*			265	*East-West:*			265	*East-West:*			265
		SUM:		1010	*SUM:*		1020	*SUM:*			1087	*SUM:*			1097	*SUM:*			1097
VOLUME/CAPACITY *(V/C)* RATIO:				0.673			0.680				0.725				0.731				0.731
V/C LESS ATSAC/ATCS ADJUSTMENT:				**0.573**			**0.580**				**0.625**				**0.631**				**0.631**
LEVEL OF SERVICE (LOS):				**A**			**A**				**B**				**B**				**B**

REMARKS: Alt. Route 4: Using only Cal-Mat Pit

Version: 1i Beta; 8/4/2011

PROJECT IMPACT

Change in *v/c* due to project:	0.006	Δ*v/c* after mitigation:	0.006
Significant impacted?	NO	Fully mitigated?	N/A

Level of Service Workheet
(Circular 212 Method)

I/S #:	North-South Street:	San Fernando Road	Year of Count:	2015	Ambient Growth: (%):	1.5	Conducted by:	City Traffic Counters	Date:	4/29/2015
CMA23	East-West Street:	Terra Bella Street	Projection Year:	2018	Peak Hour:	Mid-Day	Reviewed by:		Project:	Pacoima Reservoir Project/1-13-4

No. of Phases				2				2				2				2				2			
Opposed Ø'ing: N/S-1, E/W-2 or Both-3?				0				0				0				0				0			
Right Turns: FREE-1, NRTOR-2 or OLA-3?	NB--	0	SB--	0	NB--	0	SB--	0	NB--	0	SB--	0	NB--	0	SB--	0	NB--	0	SB--	0			
	EB--	0	WB--	0	EB--	0	WB--	0	EB--	0	WB--	0	EB--	0	WB--	0	EB--	0	WB--	0			
ATSAC-1 or ATSAC+ATCS-2?				2				2				2				2				2			
Override Capacity				0				0				0				0				0			

	MOVEMENT	EXISTING CONDITION			EXISTING PLUS PROJECT			FUTURE CONDITION W/O PROJECT				FUTURE CONDITION W/ PROJECT				FUTURE W/ PROJECT W/ MITIGATION			
		Volume	No. of Lanes	Lane Volume	Project Traffic	Total Volume	Lane Volume	Added Volume	Total Volume	No. of Lanes	Lane Volume	Added Volume	Total Volume	No. of Lanes	Lane Volume	Added Volume	Total Volume	No. of Lanes	Lane Volume
NORTHBOUND	Left	64	1	**64**	0	64	**64**	0	67	1	**67**	0	67	1	**67**	0	67	1	**67**
	Left-Through		0							0				0				0	
	Through	481	2	241	20	501	251	10	513	2	257	20	533	2	267	0	533	2	267
	Through-Right		0							0				0				0	
	Right	0	0	0	0	0	0	0	0	0	0	0	0	0	0	0	0	0	0
	Left-Through-Right		0							0				0				0	
	Left-Right		0							0				0				0	
SOUTHBOUND	Left	0	0	0	0	0	0	0	0	0	0	0	0	0	0	0	0	0	0
	Left-Through		0							0				0				0	
	Through	547	1	**332**	20	567	**342**	7	579	1	**350**	20	599	1	**360**	0	599	1	**360**
	Through-Right		1							1				1				1	
	Right	116	0	116	0	116	116	0	121	0	121	0	121	0	121	0	121	0	121
	Left-Through-Right		0							0				0				0	
	Left-Right		0							0				0				0	
EASTBOUND	Left	126	1	**126**	0	126	**126**	0	132	1	**132**	0	132	1	**132**	0	132	1	**132**
	Left-Through		0							0				0				0	
	Through	0	0	0	0	0	0	0	0	0	0	0	0	0	0	0	0	0	0
	Through-Right		0							0				0				0	
	Right	74	1	42	0	74	42	0	77	1	44	0	77	1	44	0	77	1	44
	Left-Through-Right		0							0				0				0	
	Left-Right		0							0				0				0	
WESTBOUND	Left	0	0	0	0	0	0	0	0	0	0	0	0	0	0	0	0	0	0
	Left-Through		0							0				0				0	
	Through	0	0	**0**	0	0	**0**	0	0	0	**0**	0	0	0	**0**	0	0	0	**0**
	Through-Right		0							0				0				0	
	Right	0	0	0	0	0	0	0	0	0	0	0	0	0	0	0	0	0	0
	Left-Through-Right		0							0				0				0	
	Left-Right		0							0				0				0	
CRITICAL VOLUMES		*North-South:*		396	*North-South:*		406	*North-South:*			417	*North-South:*			427	*North-South:*			427
		East-West:		126	*East-West:*		126	*East-West:*			132	*East-West:*			132	*East-West:*			132
		SUM:		522	*SUM:*		532	*SUM:*			549	*SUM:*			559	*SUM:*			559
VOLUME/CAPACITY *(V/C)* RATIO:				0.348			0.355				0.366				0.373				0.373
V/C LESS ATSAC/ATCS ADJUSTMENT:				**0.248**			**0.255**				**0.266**				**0.273**				**0.273**
LEVEL OF SERVICE (LOS):				**A**			**A**				**A**				**A**				**A**

REMARKS: Alt. Route 4: Using only Cal-Mat Pit

Version: 1i Beta; 8/4/2011

PROJECT IMPACT

Change in *v/c* due to project:	0.007	Δ*v/c* after mitigation:	0.007
Significant impacted?	NO	Fully mitigated?	N/A

Level of Service Workheet
(Circular 212 Method)

I/S #:	North-South Street:	San Fernando Road	Year of Count:	2015	Ambient Growth: (%):	1.5	Conducted by:	City Traffic Counters	Date:	4/29/2015
CMA23	East-West Street:	Terra Bella Street	Projection Year:	2018	Peak Hour:	PM	Reviewed by:		Project:	Pacoima Reservoir Project/1-13-4

No. of Phases				2				2				2				2				2			
Opposed Ø'ing: N/S-1, E/W-2 or Both-3?				0				0				0				0				0			
Right Turns: FREE-1, NRTOR-2 or OLA-3?	NB--	0	SB--	0	NB--	0	SB--	0	NB--	0	SB--	0	NB--	0	SB--	0	NB--	0	SB--	0			
	EB--	0	WB--	0	EB--	0	WB--	0	EB--	0	WB--	0	EB--	0	WB--	0	EB--	0	WB--	0			
ATSAC-1 or ATSAC+ATCS-2?				2				2				2				2				2			
Override Capacity				0				0				0				0				0			

	MOVEMENT	EXISTING CONDITION			EXISTING PLUS PROJECT			FUTURE CONDITION W/O PROJECT				FUTURE CONDITION W/ PROJECT				FUTURE W/ PROJECT W/ MITIGATION			
		Volume	No. of Lanes	Lane Volume	Project Traffic	Total Volume	Lane Volume	Added Volume	Total Volume	No. of Lanes	Lane Volume	Added Volume	Total Volume	No. of Lanes	Lane Volume	Added Volume	Total Volume	No. of Lanes	Lane Volume
NORTHBOUND	Left	111	1	**111**	0	111	**111**	0	116	1	**116**	0	116	1	**116**	0	116	1	**116**
	Left-Through		0							0				0				0	
	Through	807	2	404	20	827	414	14	858	2	429	20	878	2	439	0	878	2	439
	Through-Right		0							0				0				0	
	Right	1	0	0	0	1	0	0	1	0	0	0	1	0	0	0	1	0	0
	Left-Through-Right		0							0				0				0	
	Left-Right		0							0				0				0	
SOUTHBOUND	Left	0	0	0	0	0	0	0	0	0	0	0	0	0	0	0	0	0	0
	Left-Through		0							0				0				0	
	Through	677	1	**429**	20	697	**439**	12	720	1	**458**	20	740	1	**468**	0	740	1	**468**
	Through-Right		1							1				1				1	
	Right	180	0	180	0	180	180	8	196	0	196	0	196	0	196	0	196	0	196
	Left-Through-Right		0							0				0				0	
	Left-Right		0							0				0				0	
EASTBOUND	Left	220	1	**220**	0	220	**220**	9	239	1	**239**	0	239	1	**239**	0	239	1	**239**
	Left-Through		0							0				0				0	
	Through	0	0	0	0	0	0	0	0	0	0	0	0	0	0	0	0	0	0
	Through-Right		0							0				0				0	
	Right	117	1	62	0	117	62	0	122	1	64	0	122	1	64	0	122	1	64
	Left-Through-Right		0							0				0				0	
	Left-Right		0							0				0				0	
WESTBOUND	Left	0	0	0	0	0	0	0	0	0	0	0	0	0	0	0	0	0	0
	Left-Through		0							0				0				0	
	Through	0	0	**0**	0	0	**0**	0	0	0	**0**	0	0	0	**0**	0	0	0	**0**
	Through-Right		0							0				0				0	
	Right	0	0	0	0	0	0	0	0	0	0	0	0	0	0	0	0	0	0
	Left-Through-Right		0							0				0				0	
	Left-Right		0							0				0				0	
CRITICAL VOLUMES		*North-South:*		540	*North-South:*		550	*North-South:*			574	*North-South:*			584	*North-South:*			584
		East-West:		220	*East-West:*		220	*East-West:*			239	*East-West:*			239	*East-West:*			239
		SUM:		760	*SUM:*		770	*SUM:*			813	*SUM:*			823	*SUM:*			823
VOLUME/CAPACITY *(V/C)* RATIO:				0.507			0.513				0.542				0.549				0.549
V/C LESS ATSAC/ATCS ADJUSTMENT:				**0.407**			**0.413**				**0.442**				**0.449**				**0.449**
LEVEL OF SERVICE (LOS):				**A**			**A**				**A**				**A**				**A**

REMARKS: Alt. Route 4: Using only Cal-Mat Pit

Version: 1i Beta; 8/4/2011

PROJECT IMPACT

Change in *v/c* due to project:	0.007	Δ*v/c* after mitigation:	0.007
Significant impacted?	NO	Fully mitigated?	N/A

Level of Service Workheet
(Circular 212 Method)

I/S #:	North-South Street:	San Fernando Road	Year of Count:	2015	Ambient Growth: (%):	1.5	Conducted by:	City Traffic Counters	Date:	4/29/2015
CMA24	East-West Street:	Osborne Street	Projection Year:	2018	Peak Hour:	AM	Reviewed by:		Project:	Pacoima Reservoir Project/1-13-4

No. of Phases				4				4				4				4				4			4
Opposed Ø'ing: N/S-1, E/W-2 or Both-3?				2				2				2				2				2			2
Right Turns: FREE-1, NRTOR-2 or OLA-3?	NB--	0	SB--	0	NB--	0	SB--	0	NB--	0	SB--	0	NB--	0	SB--	0	NB--	0	SB--	0	NB--	0	SB--	0
	EB--	0	WB--	2	EB--	0	WB--	2	EB--	0	WB--	2	EB--	0	WB--	2	EB--	0	WB--	2	EB--	0	WB--	2
ATSAC-1 or ATSAC+ATCS-2?				2				2				2				2				2				2
Override Capacity				0				0				0				0				0				0

MOVEMENT		EXISTING CONDITION			EXISTING PLUS PROJECT			FUTURE CONDITION W/O PROJECT				FUTURE CONDITION W/ PROJECT				FUTURE W/ PROJECT W/ MITIGATION			
		Volume	No. of Lanes	Lane Volume	Project Traffic	Total Volume	Lane Volume	Added Volume	Total Volume	No. of Lanes	Lane Volume	Added Volume	Total Volume	No. of Lanes	Lane Volume	Added Volume	Total Volume	No. of Lanes	Lane Volume
NORTHBOUND	Left	28	1	**28**	0	28	**28**	0	29	1	**29**	0	29	1	**29**	0	29	1	**29**
	Left-Through		0							0				0				0	
	Through	324	1	196	20	344	206	4	343	1	207	20	363	1	217	0	363	1	217
	Through-Right		1							1				1				1	
	Right	68	0	68	0	68	68	0	71	0	71	0	71	0	71	0	71	0	71
	Left-Through-Right		0							0				0				0	
	Left-Right		0							0				0				0	
SOUTHBOUND	Left	110	1	110	0	110	110	1	116	1	116	0	116	1	116	0	116	1	116
	Left-Through		0							0				0				0	
	Through	875	1	**471**	20	895	**481**	8	923	1	**500**	20	943	1	**510**	0	943	1	**510**
	Through-Right		1							1				1				1	
	Right	67	0	67	0	67	67	6	76	0	76	0	76	0	76	0	76	0	76
	Left-Through-Right		0							0				0				0	
	Left-Right		0							0				0				0	
EASTBOUND	Left	78	1	78	0	78	78	8	90	1	90	0	90	1	90	0	90	1	90
	Left-Through		0							0				0				0	
	Through	587	1	**318**	0	587	**318**	7	621	1	**336**	0	621	1	**336**	0	621	1	**336**
	Through-Right		1							1				1				1	
	Right	48	0	48	0	48	48	0	50	0	50	0	50	0	50	0	50	0	50
	Left-Through-Right		0							0				0				0	
	Left-Right		0							0				0				0	
WESTBOUND	Left	82	1	82	0	82	82	0	86	1	86	0	86	1	86	0	86	1	86
	Left-Through		0							0				0				0	
	Through	764	1	**431**	0	764	**431**	11	810	1	**457**	0	810	1	**457**	0	810	1	**457**
	Through-Right		1							1				1				1	
	Right	98	0	98	0	98	98	2	104	0	104	0	104	0	104	0	104	0	104
	Left-Through-Right		0							0				0				0	
	Left-Right		0							0				0				0	
CRITICAL VOLUMES			*North-South:*	499		*North-South:*	509			*North-South:*	529			*North-South:*	539			*North-South:*	539
			East-West:	749		*East-West:*	749			*East-West:*	793			*East-West:*	793			*East-West:*	793
			SUM:	1248		*SUM:*	1258			*SUM:*	1322			*SUM:*	1332			*SUM:*	1332
VOLUME/CAPACITY *(V/C)* RATIO:				0.908			0.915				0.961				0.969				0.969
V/C LESS ATSAC/ATCS ADJUSTMENT:				**0.808**			**0.815**				**0.861**				**0.869**				**0.869**
LEVEL OF SERVICE (LOS):				**D**			**D**				**D**				**D**				**D**

REMARKS: Alt. Route 4: Using only Cal-Mat Pit

Version: 1i Beta; 8/4/2011

PROJECT IMPACT

Change in *v/c* due to project:	0.008	Δ*v/c* after mitigation:	0.008
Significant impacted?	NO	Fully mitigated?	N/A

Level of Service Workheet
(Circular 212 Method)

I/S #:	North-South Street:	San Fernando Road	Year of Count:	2015	Ambient Growth: (%):	1.5	Conducted by:	City Traffic Counters	Date:	4/29/2015
CMA24	East-West Street:	Osborne Street	Projection Year:	2018	Peak Hour:	Mid-Day	Reviewed by:		Project:	Pacoima Reservoir Project/1-13-4

No. of Phases				4				4				4				4				4			4
Opposed Ø'ing: N/S-1, E/W-2 or Both-3?				2				2				2				2				2			2
Right Turns: FREE-1, NRTOR-2 or OLA-3?	NB--	0	SB--	0	NB--	0	SB--	0	NB--	0	SB--	0	NB--	0	SB--	0	NB--	0	SB--	0	NB--	0	SB--	0
	EB--	0	WB--	2	EB--	0	WB--	2	EB--	0	WB--	2	EB--	0	WB--	2	EB--	0	WB--	2	EB--	0	WB--	2
ATSAC-1 or ATSAC+ATCS-2?				2				2				2				2				2				2
Override Capacity				0				0				0				0				0				0

	MOVEMENT	EXISTING CONDITION			EXISTING PLUS PROJECT			FUTURE CONDITION W/O PROJECT				FUTURE CONDITION W/ PROJECT				FUTURE W/ PROJECT W/ MITIGATION			
		Volume	No. of Lanes	Lane Volume	Project Traffic	Total Volume	Lane Volume	Added Volume	Total Volume	No. of Lanes	Lane Volume	Added Volume	Total Volume	No. of Lanes	Lane Volume	Added Volume	Total Volume	No. of Lanes	Lane Volume
NORTHBOUND	Left	58	1	58	0	58	58	0	61	1	61	0	61	1	61	0	61	1	61
	Left-Through		0							0				0				0	
	Through	337	1	**190**	20	357	**200**	8	360	1	**202**	20	380	1	**212**	0	380	1	**212**
	Through-Right		1							1				1				1	
	Right	42	0	42	0	42	42	0	44	0	44	0	44	0	44	0	44	0	44
	Left-Through-Right		0							0				0				0	
	Left-Right		0							0				0				0	
SOUTHBOUND	Left	167	1	**167**	0	167	**167**	1	176	1	**176**	0	176	1	**176**	0	176	1	**176**
	Left-Through		0							0				0				0	
	Through	448	1	255	20	468	265	6	474	1	269	20	494	1	279	0	494	1	279
	Through-Right		1							1				1				1	
	Right	61	0	61	0	61	61	0	64	0	64	0	64	0	64	0	64	0	64
	Left-Through-Right		0							0				0				0	
	Left-Right		0							0				0				0	
EASTBOUND	Left	75	1	75	0	75	75	0	78	1	78	0	78	1	78	0	78	1	78
	Left-Through		0							0				0				0	
	Through	547	1	**296**	0	547	**296**	0	572	1	**310**	0	572	1	**310**	0	572	1	**310**
	Through-Right		1							1				1				1	
	Right	45	0	45	0	45	45	0	47	0	47	0	47	0	47	0	47	0	47
	Left-Through-Right		0							0				0				0	
	Left-Right		0							0				0				0	
WESTBOUND	Left	45	1	45	0	45	45	0	47	1	47	0	47	1	47	0	47	1	47
	Left-Through		0							0				0				0	
	Through	521	1	**318**	0	521	**318**	0	545	1	**333**	0	545	1	**333**	0	545	1	**333**
	Through-Right		1							1				1				1	
	Right	114	0	114	0	114	114	1	120	0	120	0	120	0	120	0	120	0	120
	Left-Through-Right		0							0				0				0	
	Left-Right		0							0				0				0	
CRITICAL VOLUMES		*North-South:*		357	*North-South:*		367	*North-South:*			378	*North-South:*			388	*North-South:*			388
		East-West:		614	*East-West:*		614	*East-West:*			643	*East-West:*			643	*East-West:*			643
		SUM:		971	*SUM:*		981	*SUM:*			1021	*SUM:*			1031	*SUM:*			1031
VOLUME/CAPACITY *(V/C)* RATIO:				0.706			0.713				0.743				0.750				0.750
V/C LESS ATSAC/ATCS ADJUSTMENT:				**0.606**			**0.613**				**0.643**				**0.650**				**0.650**
LEVEL OF SERVICE (LOS):				**B**			**B**				**B**				**B**				**B**

REMARKS: Alt. Route 4: Using only Cal-Mat Pit

Version: 1i Beta; 8/4/2011

PROJECT IMPACT

Change in *v/c* due to project:	0.007	Δ*v/c* after mitigation:	0.007
Significant impacted?	NO	Fully mitigated?	N/A

Level of Service Workheet
(Circular 212 Method)

I/S #:	North-South Street:	San Fernando Road	Year of Count:	2015	Ambient Growth: (%):	1.5	Conducted by:	City Traffic Counters	Date:	4/29/2015
CMA24	East-West Street:	Osborne Street	Projection Year:	2018	Peak Hour:	PM	Reviewed by:		Project:	Pacoima Reservoir Project/1-13-4

No. of Phases				4				4				4				4				4		
Opposed Ø'ing: N/S-1, E/W-2 or Both-3?				2				2				2				2				2		
Right Turns: FREE-1, NRTOR-2 or OLA-3?	NB--	0	SB--	0	NB--	0	SB--	0	NB--	0	SB--	0	NB--	0	SB--	0	NB--	0	SB--	0		
	EB--	0	WB--	2	EB--	0	WB--	2	EB--	0	WB--	2	EB--	0	WB--	2	EB--	0	WB--	2		
ATSAC-1 or ATSAC+ATCS-2?				2				2				2				2				2		
Override Capacity				0				0				0				0				0		

MOVEMENT		EXISTING CONDITION			EXISTING PLUS PROJECT			FUTURE CONDITION W/O PROJECT				FUTURE CONDITION W/ PROJECT				FUTURE W/ PROJECT W/ MITIGATION			
		Volume	No. of Lanes	Lane Volume	Project Traffic	Total Volume	Lane Volume	Added Volume	Total Volume	No. of Lanes	Lane Volume	Added Volume	Total Volume	No. of Lanes	Lane Volume	Added Volume	Total Volume	No. of Lanes	Lane Volume
NORTHBOUND	Left	74	1	74	0	74	74	0	77	1	77	0	77	1	77	0	77	1	77
	Left-Through		0							0				0				0	
	Through	546	1	**313**	20	566	**323**	8	579	1	**331**	20	599	1	**341**	0	599	1	**341**
	Through-Right		1							1				1				1	
	Right	79	0	79	0	79	79	0	83	0	83	0	83	0	83	0	83	0	83
	Left-Through-Right		0							0				0				0	
	Left-Right		0							0				0				0	
SOUTHBOUND	Left	179	1	**179**	0	179	**179**	1	188	1	**188**	0	188	1	**188**	0	188	1	**188**
	Left-Through		0							0				0				0	
	Through	457	1	261	20	477	271	6	484	1	278	20	504	1	288	0	504	1	288
	Through-Right		1							1				1				1	
	Right	64	0	64	0	64	64	5	72	0	72	0	72	0	72	0	72	0	72
	Left-Through-Right		0							0				0				0	
	Left-Right		0							0				0				0	
EASTBOUND	Left	101	1	101	0	101	101	4	110	1	110	0	110	1	110	0	110	1	110
	Left-Through		0							0				0				0	
	Through	652	1	**348**	0	652	**348**	5	687	1	**367**	0	687	1	**367**	0	687	1	**367**
	Through-Right		1							1				1				1	
	Right	44	0	44	0	44	44	0	46	0	46	0	46	0	46	0	46	0	46
	Left-Through-Right		0							0				0				0	
	Left-Right		0							0				0				0	
WESTBOUND	Left	54	1	54	0	54	54	0	56	1	56	0	56	1	56	0	56	1	56
	Left-Through		0							0				0				0	
	Through	698	1	**418**	0	698	**418**	3	733	1	**439**	0	733	1	**439**	0	733	1	**439**
	Through-Right		1							1				1				1	
	Right	137	0	137	0	137	137	1	144	0	144	0	144	0	144	0	144	0	144
	Left-Through-Right		0							0				0				0	
	Left-Right		0							0				0				0	
CRITICAL VOLUMES		*North-South:*		492	*North-South:*		502	*North-South:*			519	*North-South:*			529	*North-South:*			529
		East-West:		766	*East-West:*		766	*East-West:*			806	*East-West:*			806	*East-West:*			806
		SUM:		1258	*SUM:*		1268	*SUM:*			1325	*SUM:*			1335	*SUM:*			1335
VOLUME/CAPACITY *(V/C)* RATIO:				0.915			0.922				0.964				0.971				0.971
V/C LESS ATSAC/ATCS ADJUSTMENT:				**0.815**			**0.822**				**0.864**				**0.871**				**0.871**
LEVEL OF SERVICE (LOS):				**D**			**D**				**D**				**D**				**D**

REMARKS: Alt. Route 4: Using only Cal-Mat Pit

Version: 1i Beta; 8/4/2011

PROJECT IMPACT

Change in *v/c* due to project:	0.007	Δ*v/c* after mitigation:	0.007
Significant impacted?	NO	Fully mitigated?	N/A

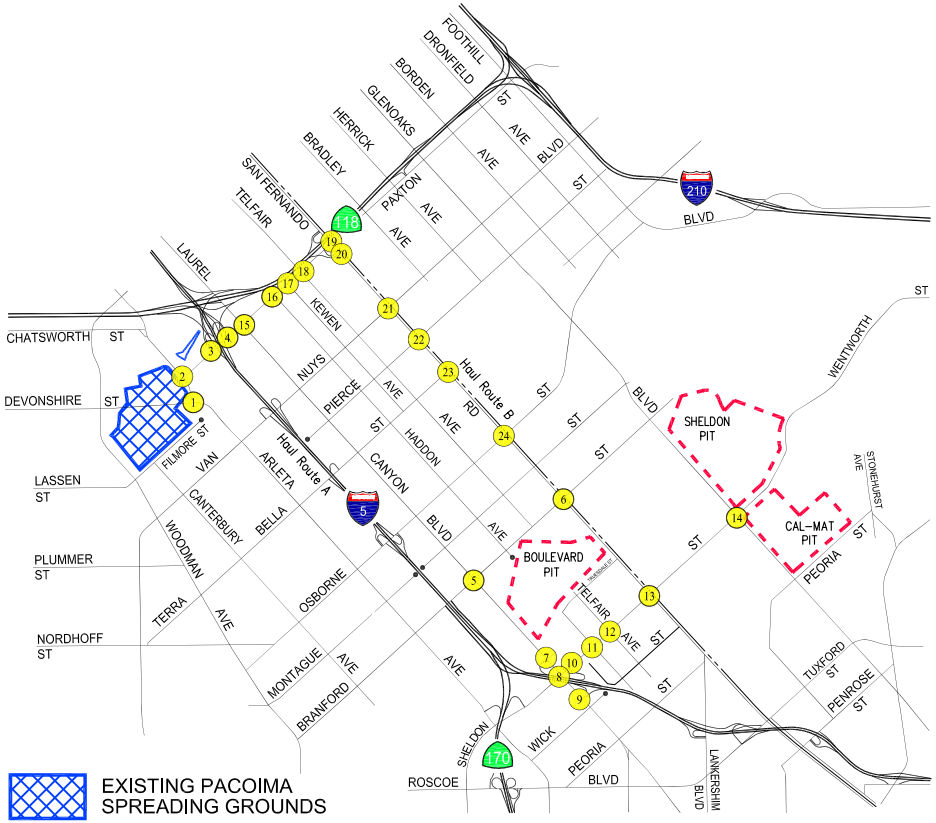

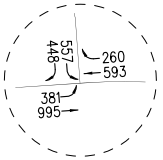

No. 1
Arleta Ave/
Devonshire St

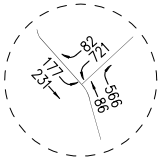

No. 2
Arleta Ave/
Paxton St

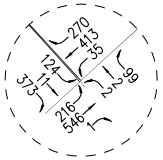

No. 3
I-5 Fwy SB
Ramps-Sharp Ave/
Paxton St

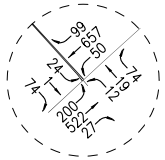

No. 4
I-5 Fwy NB
Ramps-Remick Ave/
Paxton St

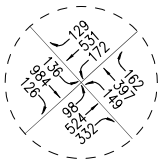

No. 5
Laurel Canyon Blvd/
Branford St

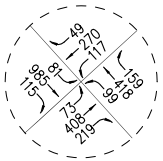

No. 6
San Fernando Rd/
Branford St

No. 7
Laurel Canyon
Blvd/I-5 Fwy NB
Off-Ramp-Jerome St

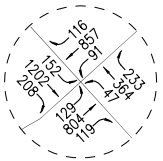

No. 8
Laurel Canyon Blvd/
Sheldon St

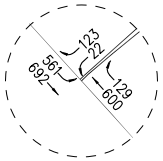

No. 9
Laurel Canyon Blvd/
I-5 Fwy SB Ramps

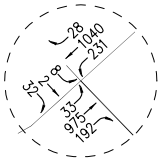

No. 10
I-5 Fwy NB
On-Ramp-Rincon
Ave/
Sheldon St

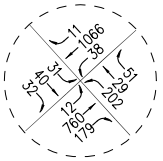

No. 11
Haddon Ave/
Sheldon St

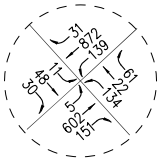

No. 12
Telfair Ave/
Sheldon St

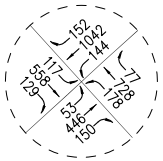

No. 13
San Fernando Rd/
Sheldon St

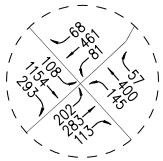

No. 14
Glenoaks Blvd/
Sheldon St

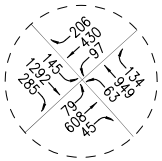

No. 15
Laurel Canyon Blvd/
Paxton St

No. 16
Haddon Ave/
Paxton St

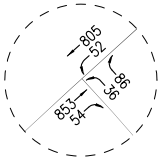

No. 17
Kewen Ave/
Paxton St

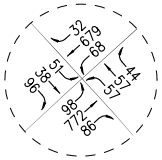

No. 18
Telfair Ave/
Paxton St

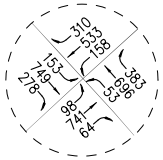

No. 19
San Fernando Rd/
Paxton St

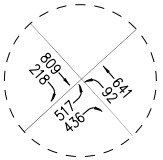

No. 20
San Fernando Rd/
SR-118 Fwy EB
Ramps

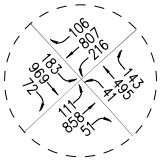

No. 21
San Fernando Rd/
Van Nuys Blvd

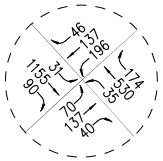

No. 22
San Fernando Rd/
Pierce St

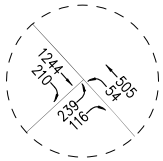

No. 23
San Fernando Rd/
Terra Bella St

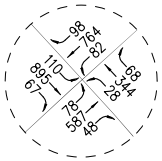

No. 24
San Fernando Rd/
Osborne St

N

NOT TO SCALE

APPENDIX FIGURE C1-1A
EXISTING WITH PROJECT TRAFFIC VOLUMES

ALTERNATIVE ROUTE 1 - WEEKDAY AM PEAK HOUR

PACOIMA SPREADING GROUNDS IMPROVEMENT PROJECT

LINSCOTT, LAW & GREENSPAN, engineers

o:\job_file\4056-2\dwg\opdx-c1-1a.dwg LDP 14:27:27 07/02/2015 rodriquez

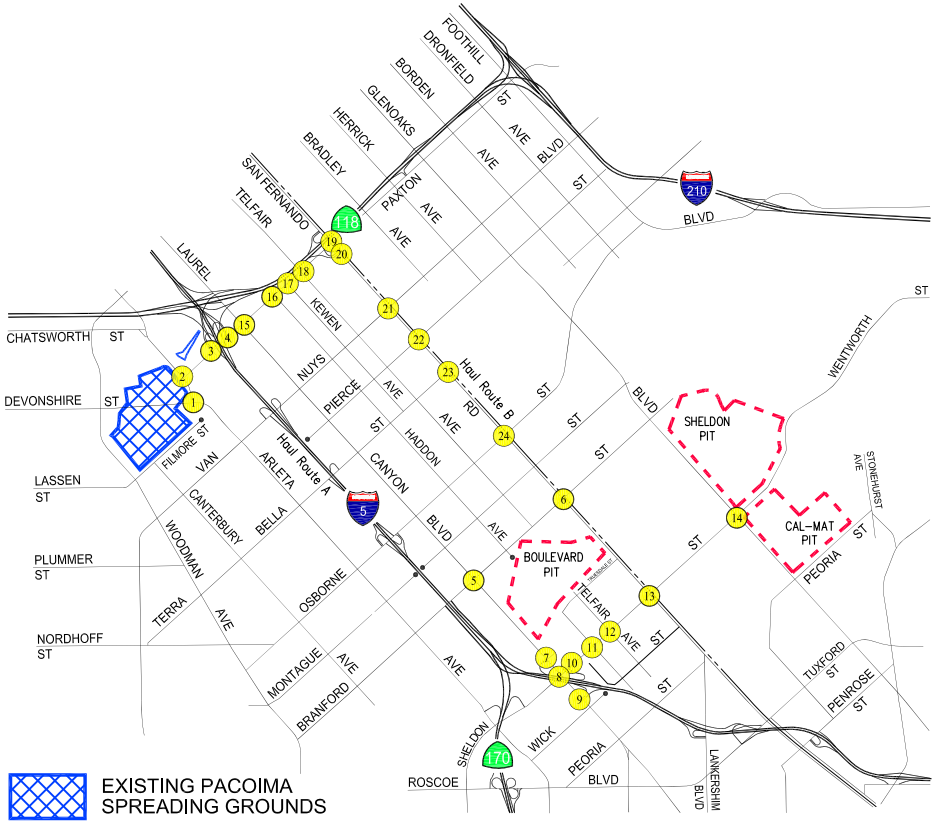

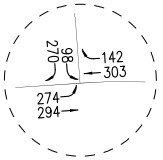

No. 1
Arleta Ave/
Devonshire St

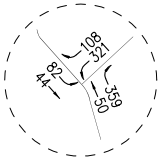

No. 2
Arleta Ave/
Paxton St

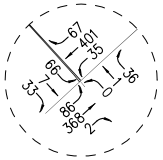

No. 3
I-5 Fwy SB
Ramps-Sharp Ave/
Paxton St

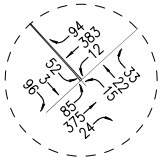

No. 4
I-5 Fwy NB
Ramps-Remick Ave/
Paxton St

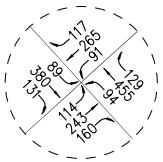

No. 5
Laurel Canyon Blvd/
Branford St

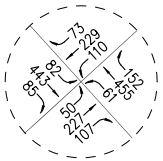

No. 6
San Fernando Rd/
Branford St

No. 7
Laurel Canyon
Blvd/I-5 Fwy NB
Off-Ramp-Jerome St

No. 8
Laurel Canyon Blvd/
Sheldon St

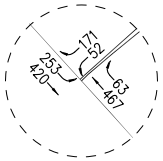

No. 9
Laurel Canyon Blvd/
I-5 Fwy SB Ramps

No. 10
I-5 Fwy NB
On-Ramp-Rincon
Ave/
Sheldon St

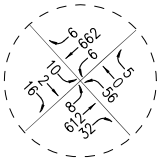

No. 11
Haddon Ave/
Sheldon St

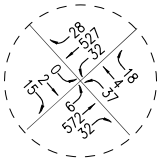

No. 12
Telfair Ave/
Sheldon St

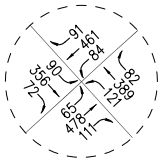

No. 13
San Fernando Rd/
Sheldon St

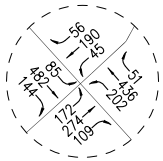

No. 14
Glenoaks Blvd/
Sheldon St

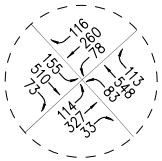

No. 15
Laurel Canyon Blvd/
Paxton St

No. 16
Haddon Ave/
Paxton St

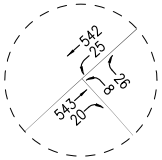

No. 17
Kewen Ave/
Paxton St

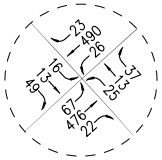

No. 18
Telfair Ave/
Paxton St

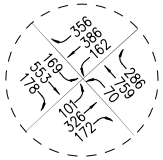

No. 19
San Fernando Rd/
Paxton St

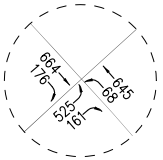

No. 20
San Fernando Rd/
SR-118 Fwy EB
Ramps

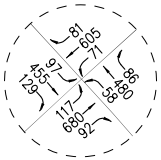

No. 21
San Fernando Rd/
Van Nuys Blvd

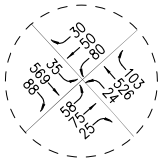

No. 22
San Fernando Rd/
Pierce St

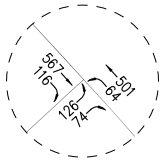

No. 23
San Fernando Rd/
Terra Bella St

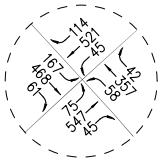

No. 24
San Fernando Rd/
Osborne St

N

NOT TO SCALE

APPENDIX FIGURE C1-1B
EXISTING WITH PROJECT TRAFFIC VOLUMES

ALTERNATIVE ROUTE 1 - WEEKDAY MID-DAY PEAK HOUR

PACOIMA SPREADING GROUNDS IMPROVEMENT PROJECT

LINSCOTT, LAW & GREENSPAN, engineers

o:\job_file\4056-2\dwg\opdx-c1-1b.dwg LDP 14:26:40 07/02/2015 rodriquez

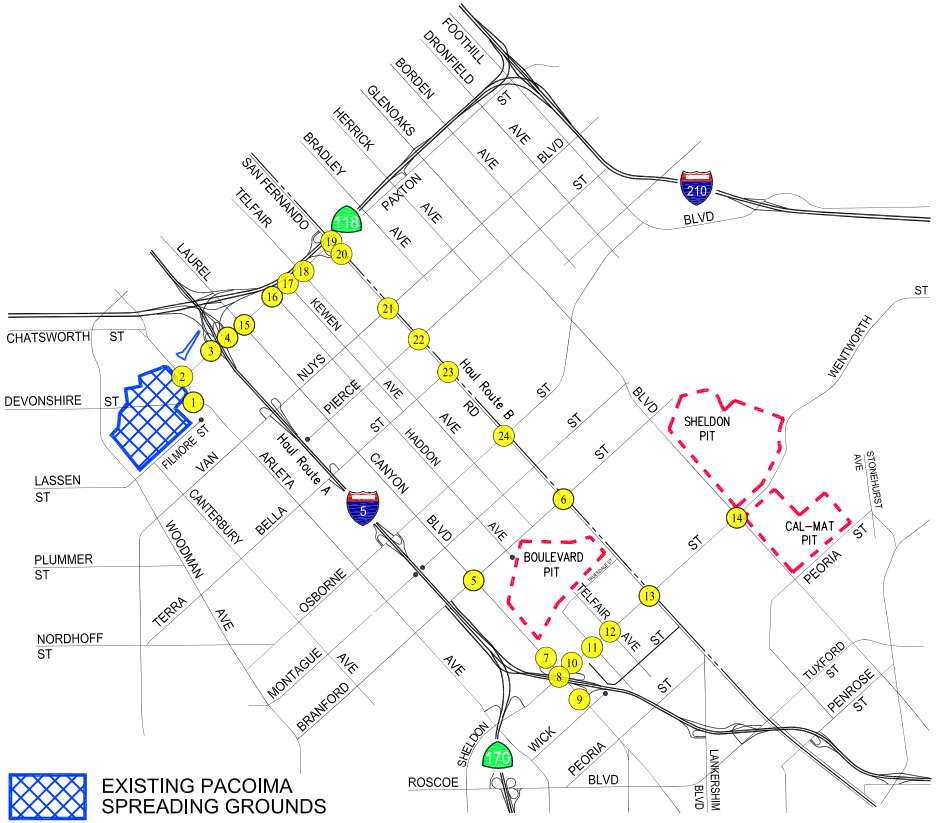

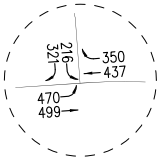

No. 1
Arleta Ave/
Devonshire St

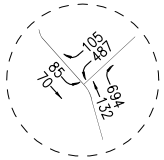

No. 2
Arleta Ave/
Paxton St

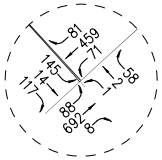

No. 3
I-5 Fwy SB
Ramps-Sharp Ave/
Paxton St

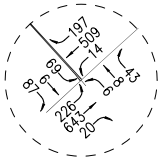

No. 4
I-5 Fwy NB
Ramps-Remick Ave/
Paxton St

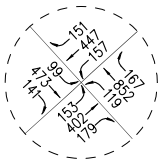

No. 5
Laurel Canyon Blvd/
Branford St

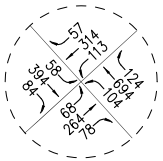

No. 6
San Fernando Rd/
Branford St

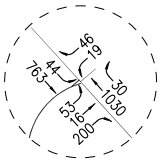

No. 7
Laurel Canyon
Blvd/I-5 Fwy NB
Off-Ramp-Jerome St

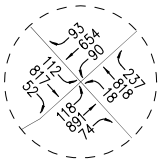

No. 8
Laurel Canyon Blvd/
Sheldon St

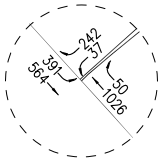

No. 9
Laurel Canyon Blvd/
I-5 Fwy SB Ramps

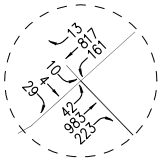

No. 10
I-5 Fwy NB
On-Ramp-Rincon
Ave/
Sheldon St

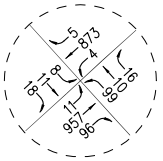

No. 11
Haddon Ave/
Sheldon St

No. 12
Telfair Ave/
Sheldon St

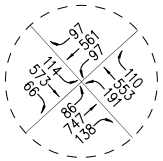

No. 13
San Fernando Rd/
Sheldon St

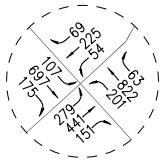

No. 14
Glenoaks Blvd/
Sheldon St

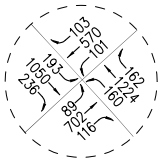

No. 15
Laurel Canyon Blvd/
Paxton St

No. 16
Haddon Ave/
Paxton St

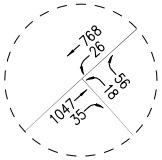

No. 17
Kewen Ave/
Paxton St

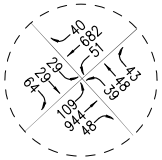

No. 18
Telfair Ave/
Paxton St

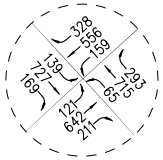

No. 19
San Fernando Rd/
Paxton St

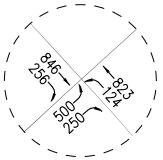

No. 20
San Fernando Rd/
SR-118 Fwy EB
Ramps

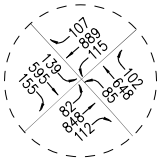

No. 21
San Fernando Rd/
Van Nuys Blvd

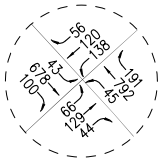

No. 22
San Fernando Rd/
Pierce St

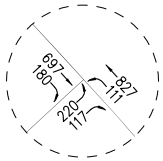

No. 23
San Fernando Rd/
Terra Bella St

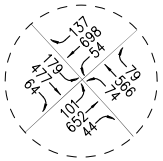

No. 24
San Fernando Rd/
Osborne St

N

NOT TO SCALE

APPENDIX FIGURE C1-1C
EXISTING WITH PROJECT TRAFFIC VOLUMES

ALTERNATIVE ROUTE 1 - WEEKDAY PM PEAK HOUR

PACOIMA SPREADING GROUNDS IMPROVEMENT PROJECT

LINSCOTT, LAW & GREENSPAN, engineers

o:\job_file\4056-2\dwg\opdx-c1-1c.dwg LDP 14:26:17 07/02/2015 rodriquez

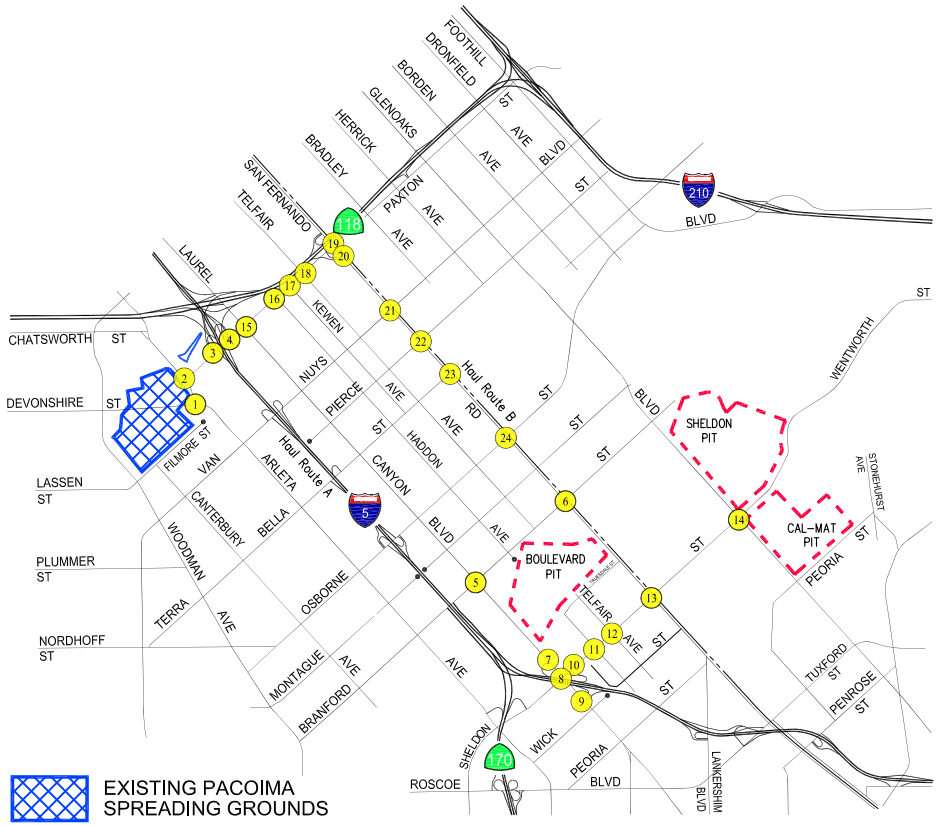

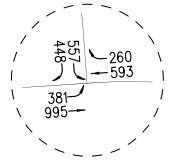

No. 1
Arleta Ave/
Devonshire St

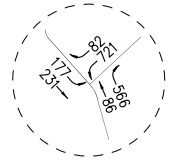

No. 2
Arleta Ave/
Paxton St

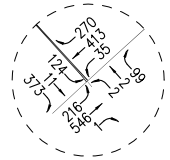

No. 3
I-5 Fwy SB
Ramps-Sharp Ave/
Paxton St

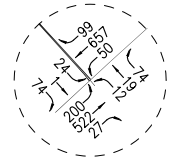

No. 4
I-5 Fwy NB
Ramps-Remick Ave/
Paxton St

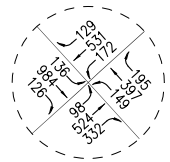

No. 5
Laurel Canyon Blvd/
Branford St

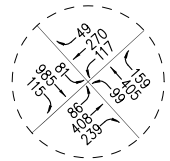

No. 6
San Fernando Rd/
Branford St

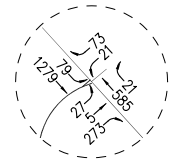

No. 7
Laurel Canyon
Blvd/I-5 Fwy NB
Off-Ramp-Jerome St

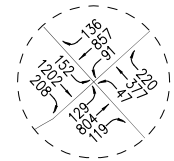

No. 8
Laurel Canyon Blvd/
Sheldon St

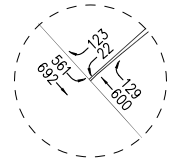

No. 9
Laurel Canyon Blvd/
I-5 Fwy SB Ramps

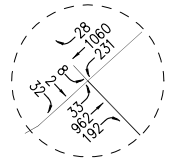

No. 10
I-5 Fwy NB
On-Ramp-Rincon
Ave/
Sheldon St

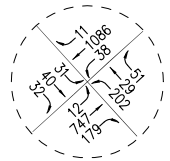

No. 11
Haddon Ave/
Sheldon St

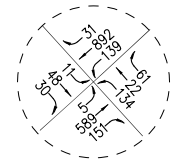

No. 12
Telfair Ave/
Sheldon St

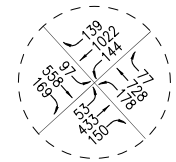

No. 13
San Fernando Rd/
Sheldon St

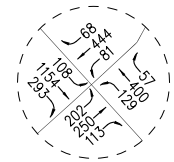

No. 14
Glenoaks Blvd/
Sheldon St

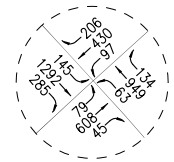

No. 15
Laurel Canyon Blvd/
Paxton St

No. 16
Haddon Ave/
Paxton St

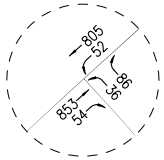

No. 17
Kewen Ave/
Paxton St

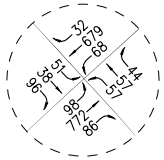

No. 18
Telfair Ave/
Paxton St

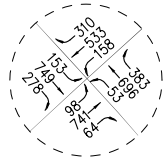

No. 19
San Fernando Rd/
Paxton St

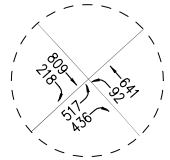

No. 20
San Fernando Rd/
SR-118 Fwy EB
Ramps

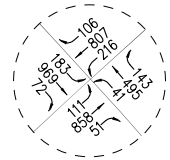

No. 21
San Fernando Rd/
Van Nuys Blvd

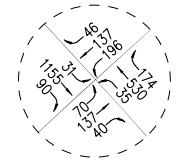

No. 22
San Fernando Rd/
Pierce St

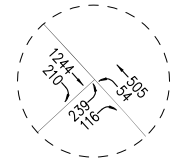

No. 23
San Fernando Rd/
Terra Bella St

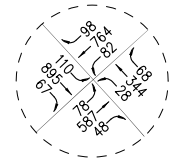

No. 24
San Fernando Rd/
Osborne St

N

NOT TO SCALE

APPENDIX FIGURE C1-2A
EXISTING WITH PROJECT TRAFFIC VOLUMES

ALTERNATIVE ROUTE 2 - WEEKDAY AM PEAK HOUR

PACOIMA SPREADING GROUNDS IMPROVEMENT PROJECT

LINSCOTT, LAW & GREENSPAN, engineers

o:\job_file\4056-2\dwg\opdx-c1-2a.dwg LDP 14:25:56 07/02/2015 rodriquez

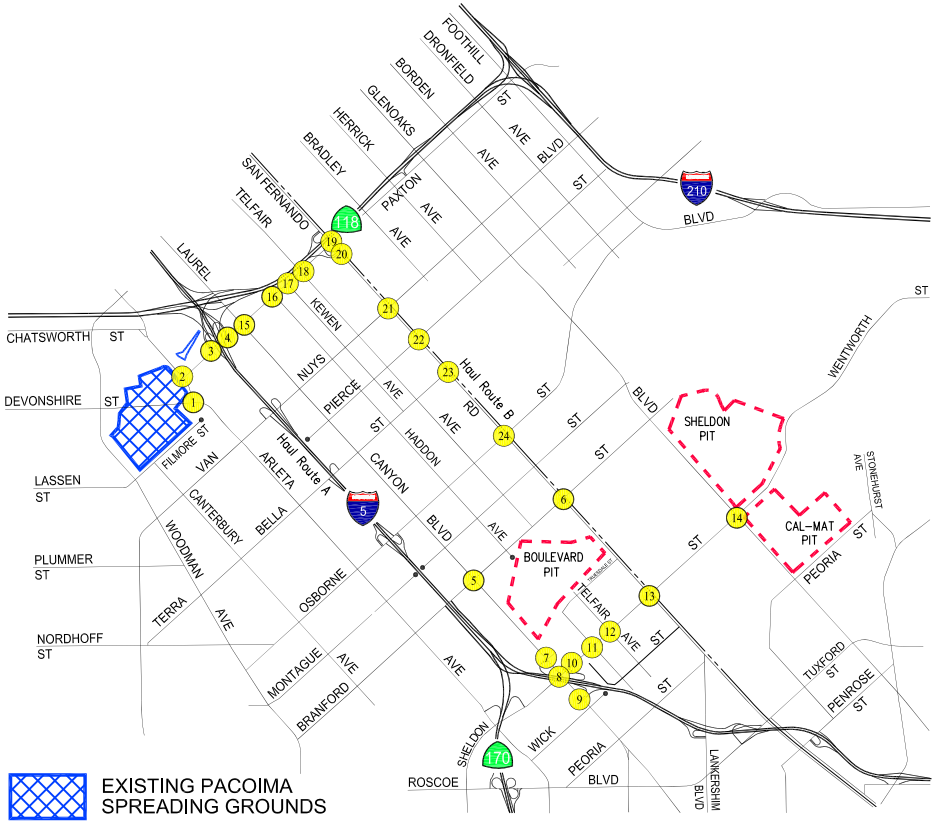

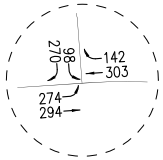

No. 1
Arleta Ave/
Devonshire St

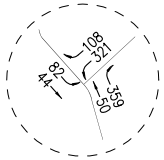

No. 2
Arleta Ave/
Paxton St

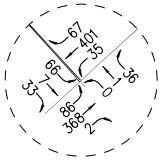

No. 3
I-5 Fwy SB
Ramps-Sharp Ave/
Paxton St

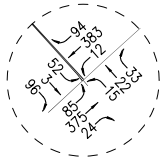

No. 4
I-5 Fwy NB
Ramps-Remick Ave/
Paxton St

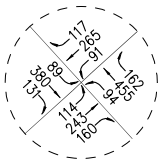

No. 5
Laurel Canyon Blvd/
Branford St

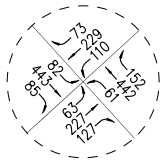

No. 6
San Fernando Rd/
Branford St

No. 7
Laurel Canyon
Blvd/I-5 Fwy NB
Off-Ramp-Jerome St

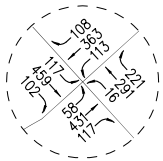

No. 8
Laurel Canyon Blvd/
Sheldon St

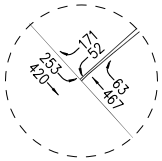

No. 9
Laurel Canyon Blvd/
I-5 Fwy SB Ramps

No. 10
I-5 Fwy NB
On-Ramp-Rincon
Ave/
Sheldon St

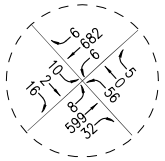

No. 11
Haddon Ave/
Sheldon St

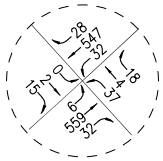

No. 12
Telfair Ave/
Sheldon St

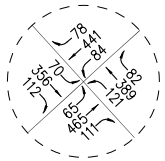

No. 13
San Fernando Rd/
Sheldon St

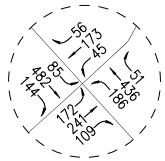

No. 14
Glenoaks Blvd/
Sheldon St

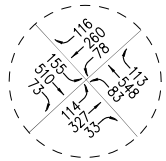

No. 15
Laurel Canyon Blvd/
Paxton St

No. 16
Haddon Ave/
Paxton St

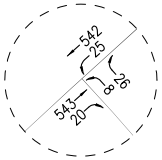

No. 17
Kewen Ave/
Paxton St

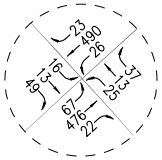

No. 18
Telfair Ave/
Paxton St

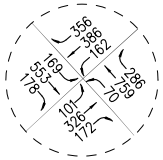

No. 19
San Fernando Rd/
Paxton St

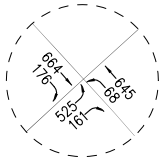

No. 20
San Fernando Rd/
SR-118 Fwy EB
Ramps

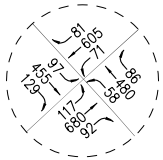

No. 21
San Fernando Rd/
Van Nuys Blvd

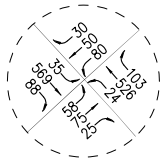

No. 22
San Fernando Rd/
Pierce St

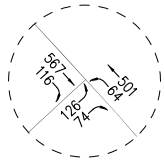

No. 23
San Fernando Rd/
Terra Bella St

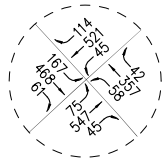

No. 24
San Fernando Rd/
Osborne St

N

NOT TO SCALE

APPENDIX FIGURE C1-2B
EXISTING WITH PROJECT TRAFFIC VOLUMES

ALTERNATIVE ROUTE 2 - WEEKDAY MID-DAY PEAK HOUR

PACOIMA SPREADING GROUNDS IMPROVEMENT PROJECT

LINSCOTT, LAW & GREENSPAN, engineers

o:\job_file\4056-2\dwg\opdx-c1-2b.dwg LDP 14:25:33 07/02/2015 rodriquez

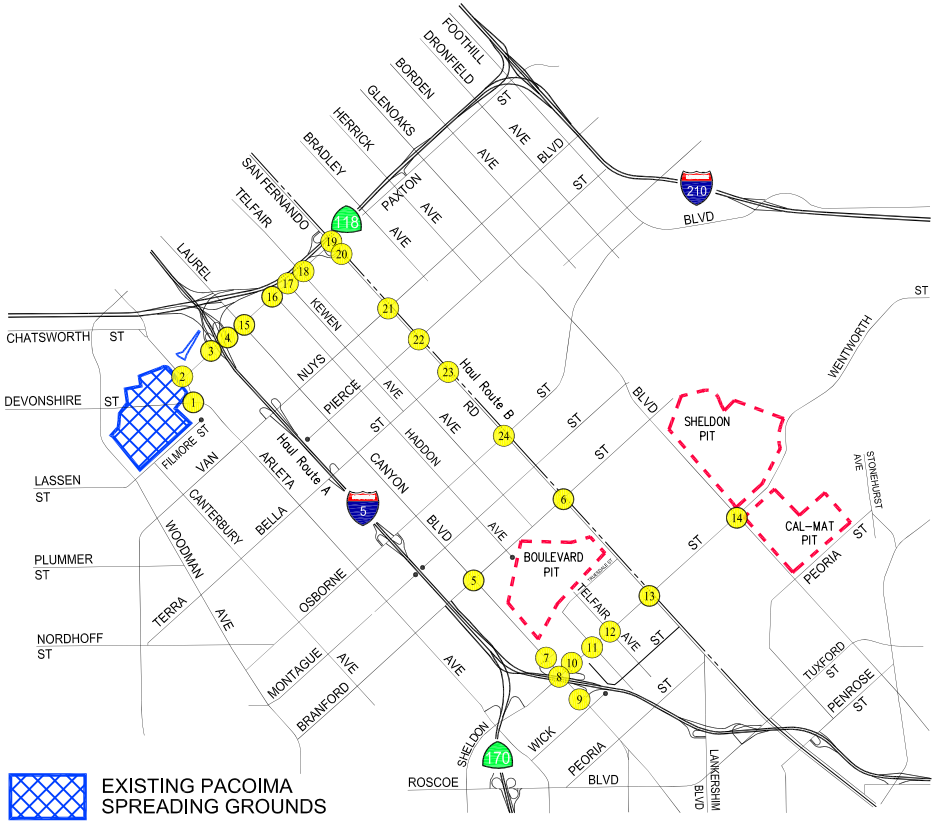

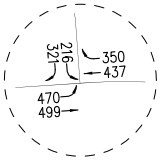

No. 1
Arleta Ave/
Devonshire St

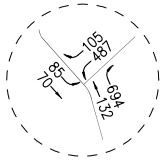

No. 2
Arleta Ave/
Paxton St

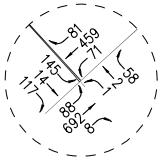

No. 3
I-5 Fwy SB
Ramps-Sharp Ave/
Paxton St

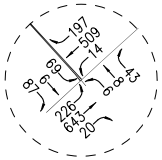

No. 4
I-5 Fwy NB
Ramps-Remick Ave/
Paxton St

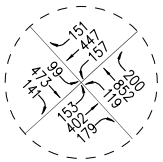

No. 5
Laurel Canyon Blvd/
Branford St

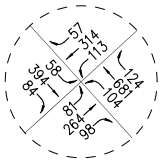

No. 6
San Fernando Rd/
Branford St

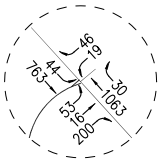

No. 7
Laurel Canyon
Blvd/I-5 Fwy NB
Off-Ramp-Jerome St

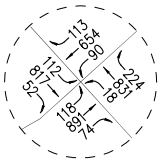

No. 8
Laurel Canyon Blvd/
Sheldon St

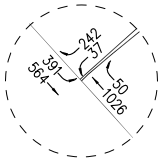

No. 9
Laurel Canyon Blvd/
I-5 Fwy SB Ramps

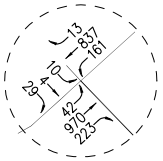

No. 10
I-5 Fwy NB
On-Ramp-Rincon
Ave/
Sheldon St

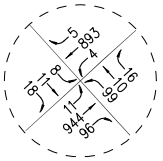

No. 11
Haddon Ave/
Sheldon St

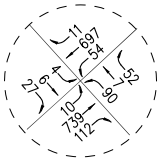

No. 12
Telfair Ave/
Sheldon St

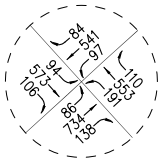

No. 13
San Fernando Rd/
Sheldon St

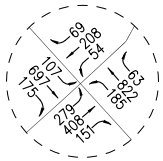

No. 14
Glenoaks Blvd/
Sheldon St

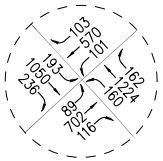

No. 15
Laurel Canyon Blvd/
Paxton St

No. 16
Haddon Ave/
Paxton St

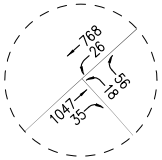

No. 17
Kewen Ave/
Paxton St

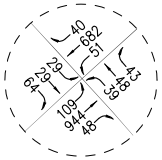

No. 18
Telfair Ave/
Paxton St

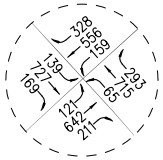

No. 19
San Fernando Rd/
Paxton St

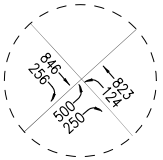

No. 20
San Fernando Rd/
SR-118 Fwy EB
Ramps

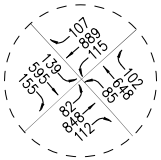

No. 21
San Fernando Rd/
Van Nuys Blvd

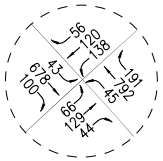

No. 22
San Fernando Rd/
Pierce St

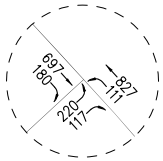

No. 23
San Fernando Rd/
Terra Bella St

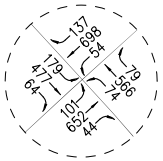

No. 24
San Fernando Rd/
Osborne St

N

NOT TO SCALE

APPENDIX FIGURE C1-2C
EXISTING WITH PROJECT TRAFFIC VOLUMES

ALTERNATIVE ROUTE 2 - WEEKDAY PM PEAK HOUR

PACOIMA SPREADING GROUNDS IMPROVEMENT PROJECT

LINSCOTT, LAW & GREENSPAN, engineers

o:\job_file\4056-2\dwg\opdx-c1-2c.dwg LDP 14:24:47 07/02/2015 rodriquez

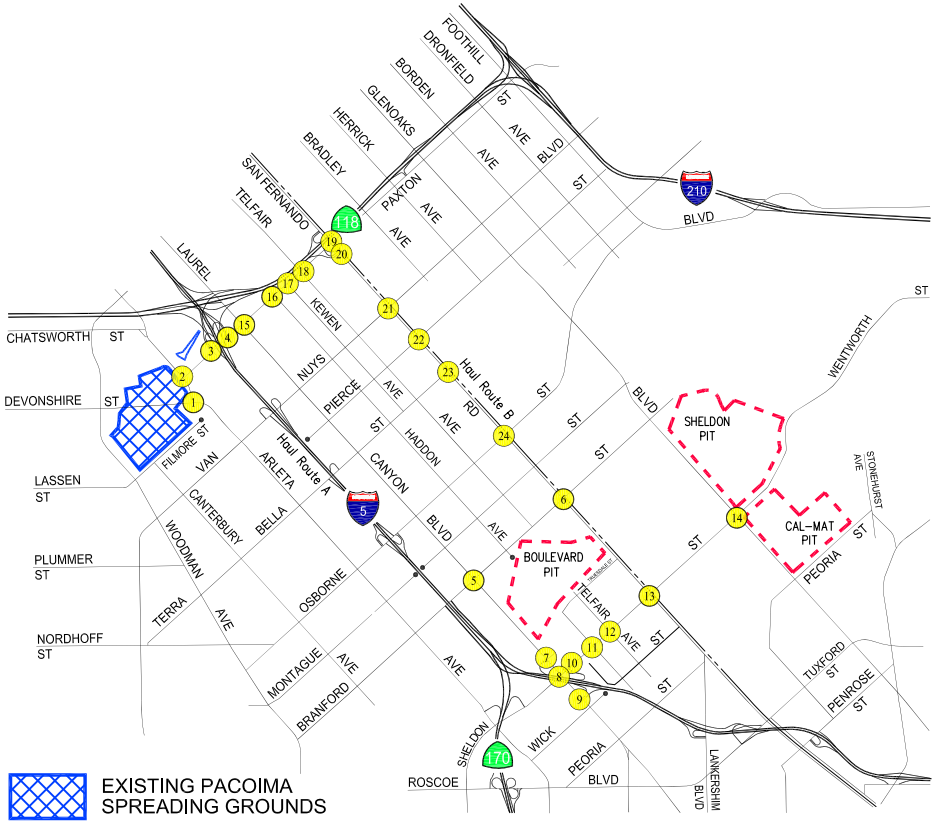

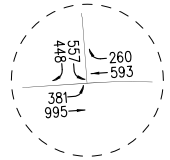

No. 1
Arleta Ave/
Devonshire St

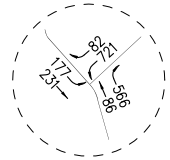

No. 2
Arleta Ave/
Paxton St

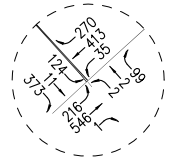

No. 3
I-5 Fwy SB
Ramps-Sharp Ave/
Paxton St

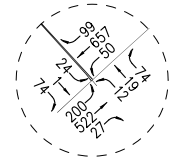

No. 4
I-5 Fwy NB
Ramps-Remick Ave/
Paxton St

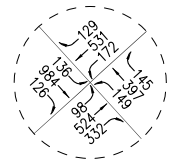

No. 5
Laurel Canyon Blvd/
Branford St

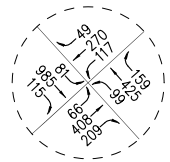

No. 6
San Fernando Rd/
Branford St

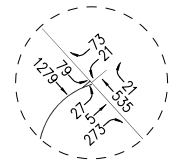

No. 7
Laurel Canyon
Blvd/I-5 Fwy NB
Off-Ramp-Jerome St

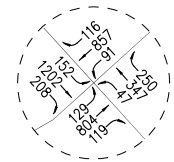

No. 8
Laurel Canyon Blvd/
Sheldon St

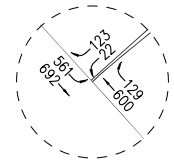

No. 9
Laurel Canyon Blvd/
I-5 Fwy SB Ramps

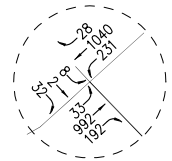

No. 10
I-5 Fwy NB
On-Ramp-Rincon
Ave/
Sheldon St

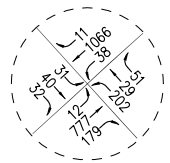

No. 11
Haddon Ave/
Sheldon St

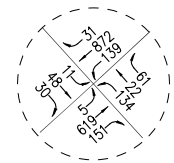

No. 12
Telfair Ave/
Sheldon St

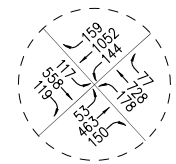

No. 13
San Fernando Rd/
Sheldon St

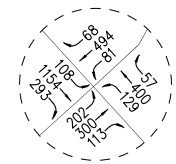

No. 14
Glenoaks Blvd/
Sheldon St

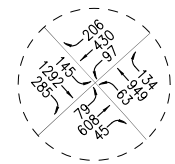

No. 15
Laurel Canyon Blvd/
Paxton St

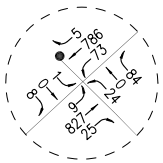

No. 16
Haddon Ave/
Paxton St

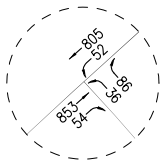

No. 17
Kewen Ave/
Paxton St

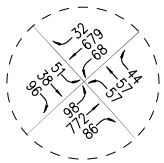

No. 18
Telfair Ave/
Paxton St

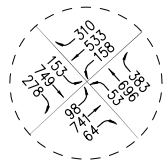

No. 19
San Fernando Rd/
Paxton St

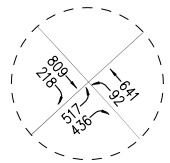

No. 20
San Fernando Rd/
SR-118 Fwy EB
Ramps

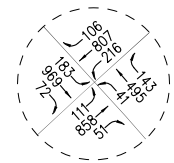

No. 21
San Fernando Rd/
Van Nuys Blvd

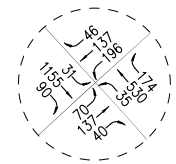

No. 22
San Fernando Rd/
Pierce St

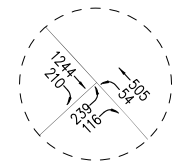

No. 23
San Fernando Rd/
Terra Bella St

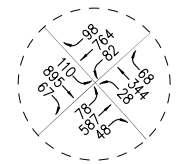

No. 24
San Fernando Rd/
Osborne St

N

NOT TO SCALE

APPENDIX FIGURE C1-3A
EXISTING WITH PROJECT TRAFFIC VOLUMES

ALTERNATIVE ROUTE 3 - WEEKDAY AM PEAK HOUR

PACOIMA SPREADING GROUNDS IMPROVEMENT PROJECT

LINSCOTT, LAW & GREENSPAN, engineers

o:\job_file\4056-2\dwg\apdx-c1-3a.dwg LDP 14:24:26 07/02/2015 rodriquez

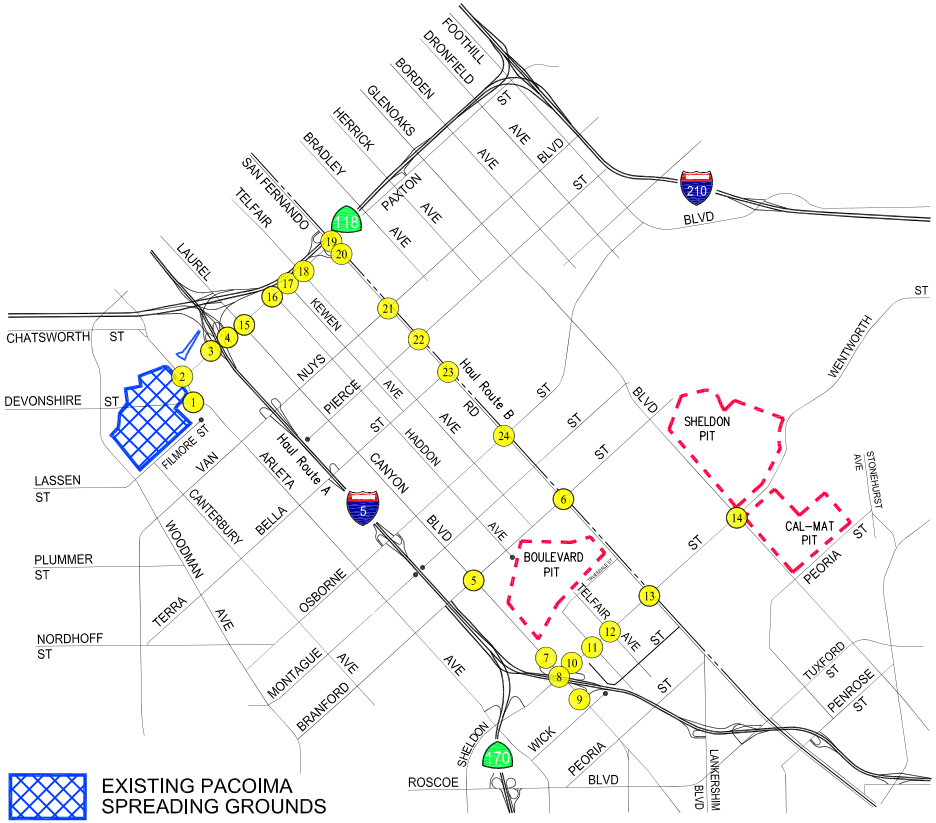

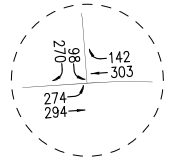

No. 1
Arleta Ave/
Devonshire St

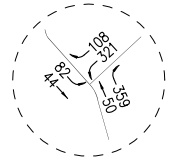

No. 2
Arleta Ave/
Paxton St

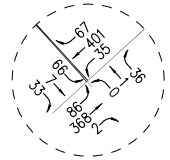

No. 3
I-5 Fwy SB
Ramps-Sharp Ave/
Paxton St

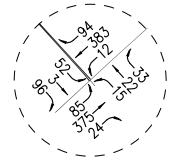

No. 4
I-5 Fwy NB
Ramps-Remick Ave/
Paxton St

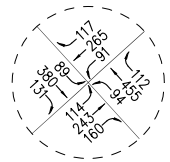

No. 5
Laurel Canyon Blvd/
Branford St

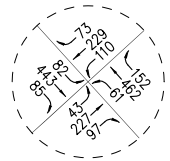

No. 6
San Fernando Rd/
Branford St

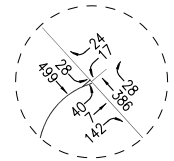

No. 7
Laurel Canyon
Blvd/I-5 Fwy NB
Off-Ramp-Jerome St

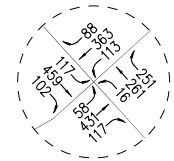

No. 8
Laurel Canyon Blvd/
Sheldon St

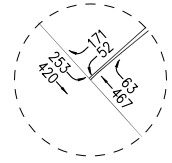

No. 9
Laurel Canyon Blvd/
I-5 Fwy SB Ramps

No. 10
I-5 Fwy NB
On-Ramp-Rincon
Ave/
Sheldon St

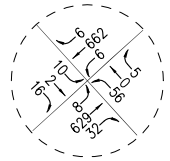

No. 11
Haddon Ave/
Sheldon St

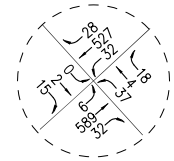

No. 12
Telfair Ave/
Sheldon St

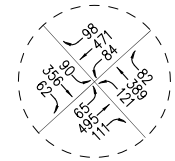

No. 13
San Fernando Rd/
Sheldon St

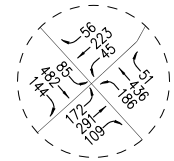

No. 14
Glenoaks Blvd/
Sheldon St

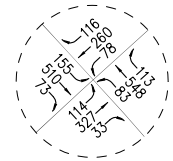

No. 15
Laurel Canyon Blvd/
Paxton St

No. 16
Haddon Ave/
Paxton St

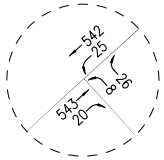

No. 17
Kewen Ave/
Paxton St

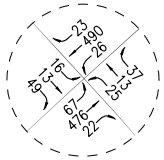

No. 18
Telfair Ave/
Paxton St

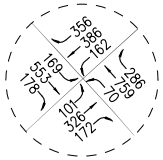

No. 19
San Fernando Rd/
Paxton St

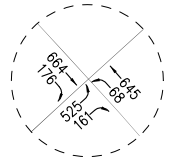

No. 20
San Fernando Rd/
SR-118 Fwy EB
Ramps

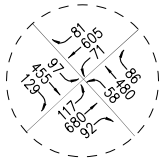

No. 21
San Fernando Rd/
Van Nuys Blvd

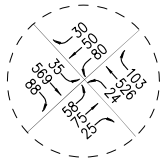

No. 22
San Fernando Rd/
Pierce St

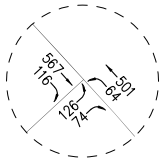

No. 23
San Fernando Rd/
Terra Bella St

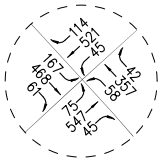

No. 24
San Fernando Rd/
Osborne St

N

NOT TO SCALE

APPENDIX FIGURE C1-3B
EXISTING WITH PROJECT TRAFFIC VOLUMES

ALTERNATIVE ROUTE 3 - WEEKDAY MID-DAY PEAK HOUR

PACOIMA SPREADING GROUNDS IMPROVEMENT PROJECT

LINSCOTT, LAW & GREENSPAN, engineers

o:\job_file\4056-2\dwg\opdx-c1-3b.dwg LDP 14:24:05 07/02/2015 rodriquez

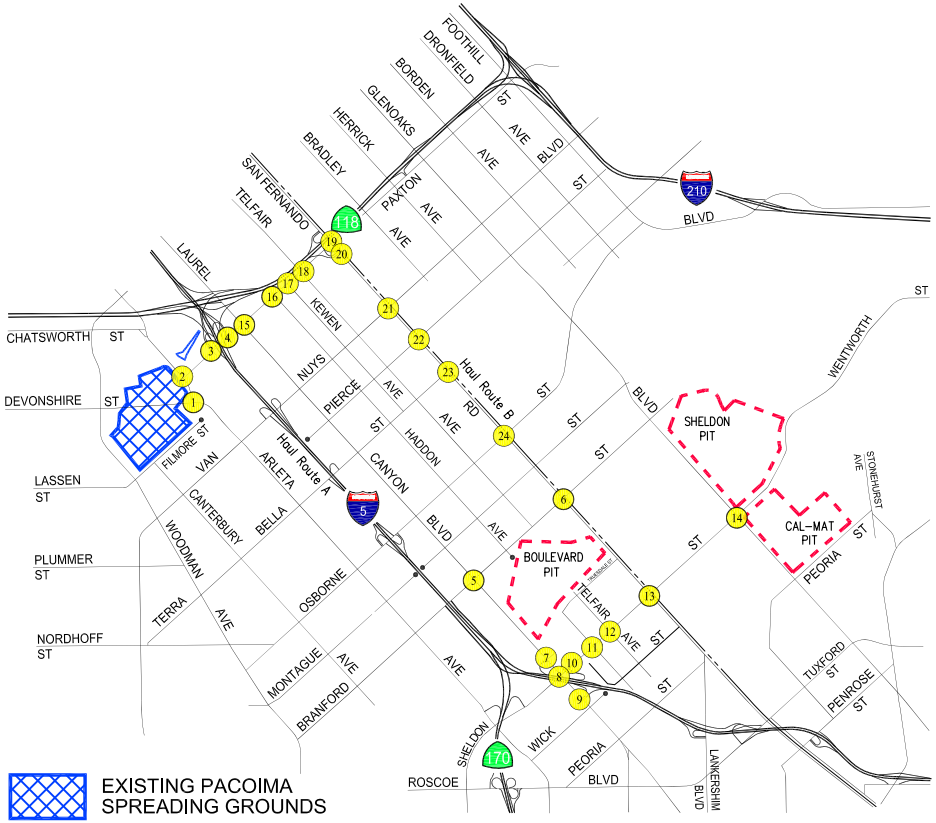

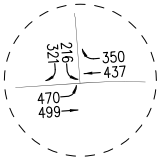

No. 1
Arleta Ave/
Devonshire St

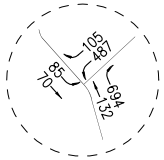

No. 2
Arleta Ave/
Paxton St

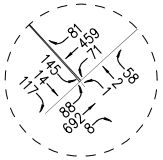

No. 3
I-5 Fwy SB
Ramps-Sharp Ave/
Paxton St

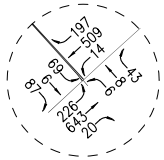

No. 4
I-5 Fwy NB
Ramps-Remick Ave/
Paxton St

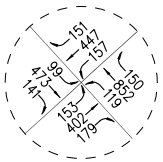

No. 5
Laurel Canyon Blvd/
Branford St

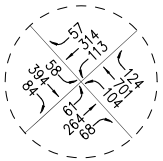

No. 6
San Fernando Rd/
Branford St

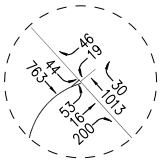

No. 7
Laurel Canyon
Blvd/I-5 Fwy NB
Off-Ramp-Jerome St

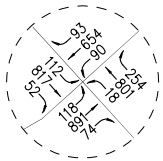

No. 8
Laurel Canyon Blvd/
Sheldon St

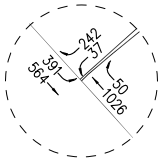

No. 9
Laurel Canyon Blvd/
I-5 Fwy SB Ramps

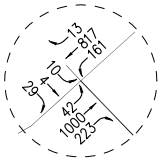

No. 10
I-5 Fwy NB
On-Ramp-Rincon
Ave/
Sheldon St

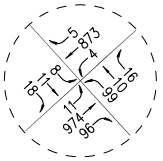

No. 11
Haddon Ave/
Sheldon St

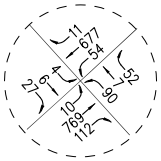

No. 12
Telfair Ave/
Sheldon St

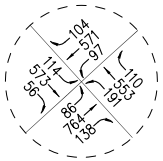

No. 13
San Fernando Rd/
Sheldon St

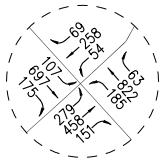

No. 14
Glenoaks Blvd/
Sheldon St

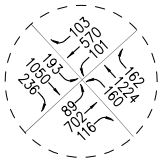

No. 15
Laurel Canyon Blvd/
Paxton St

No. 16
Haddon Ave/
Paxton St

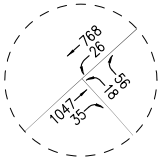

No. 17
Kewen Ave/
Paxton St

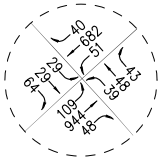

No. 18
Telfair Ave/
Paxton St

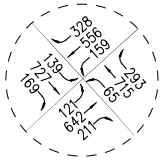

No. 19
San Fernando Rd/
Paxton St

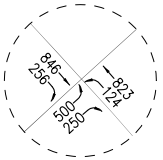

No. 20
San Fernando Rd/
SR-118 Fwy EB
Ramps

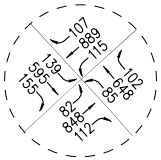

No. 21
San Fernando Rd/
Van Nuys Blvd

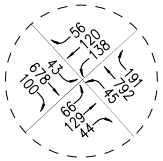

No. 22
San Fernando Rd/
Pierce St

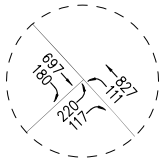

No. 23
San Fernando Rd/
Terra Bella St

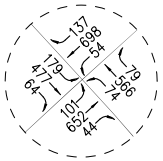

No. 24
San Fernando Rd/
Osborne St

N

NOT TO SCALE

APPENDIX FIGURE C1-3C
EXISTING WITH PROJECT TRAFFIC VOLUMES

ALTERNATIVE ROUTE 3 - WEEKDAY PM PEAK HOUR

PACOIMA SPREADING GROUNDS IMPROVEMENT PROJECT

LINSCOTT, LAW & GREENSPAN, engineers

o:\job_file\4056-2\dwg\opdx-c1-3c.dwg LDP 14:23:45 07/02/2015 rodriquez

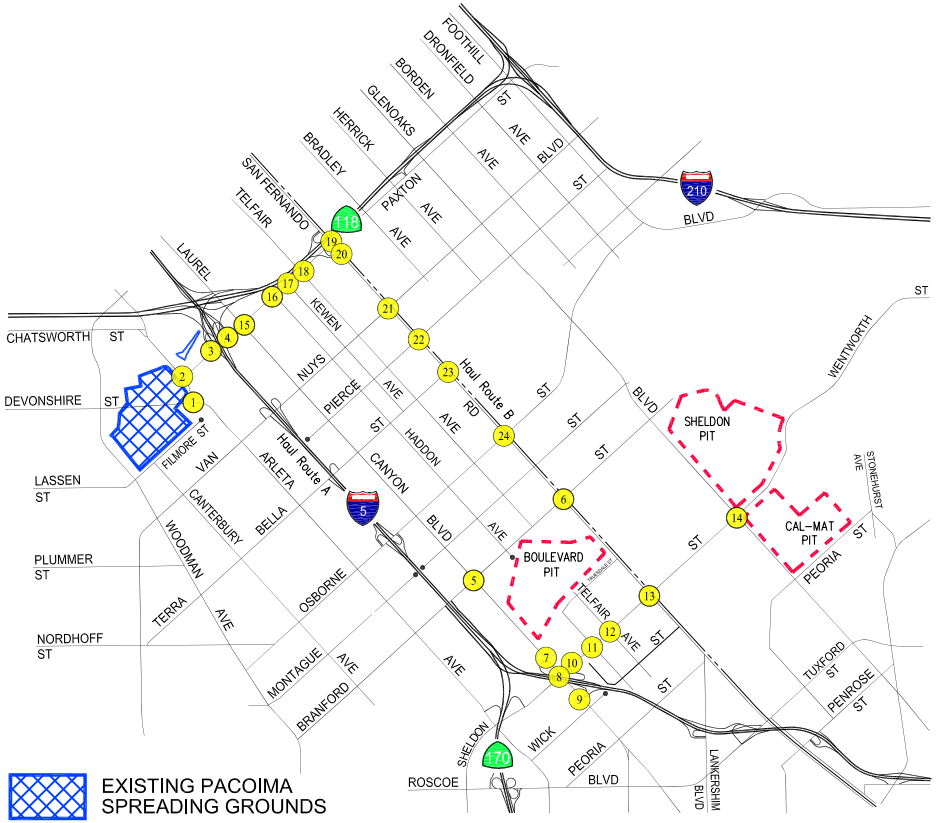

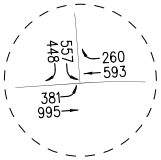

No. 1
Arleta Ave/
Devonshire St

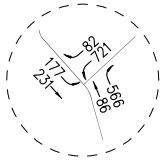

No. 2
Arleta Ave/
Paxton St

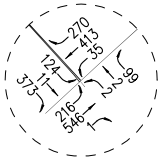

No. 3
I-5 Fwy SB
Ramps-Sharp Ave/
Paxton St

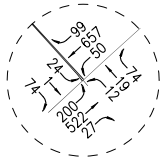

No. 4
I-5 Fwy NB
Ramps-Remick Ave/
Paxton St

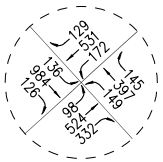

No. 5
Laurel Canyon Blvd/
Branford St

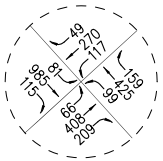

No. 6
San Fernando Rd/
Branford St

No. 7
Laurel Canyon
Blvd/I-5 Fwy NB
Off-Ramp-Jerome St

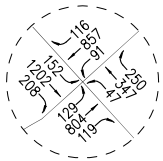

No. 8
Laurel Canyon Blvd/
Sheldon St

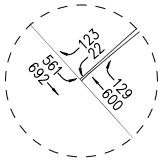

No. 9
Laurel Canyon Blvd/
I-5 Fwy SB Ramps

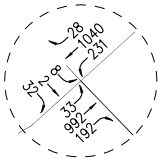

No. 10
I-5 Fwy NB
On-Ramp-Rincon
Ave/
Sheldon St

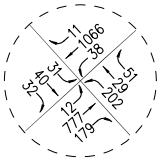

No. 11
Haddon Ave/
Sheldon St

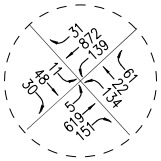

No. 12
Telfair Ave/
Sheldon St

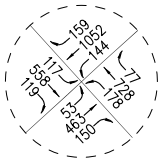

No. 13
San Fernando Rd/
Sheldon St

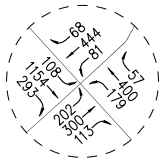

No. 14
Glenoaks Blvd/
Sheldon St

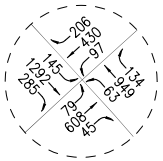

No. 15
Laurel Canyon Blvd/
Paxton St

No. 16
Haddon Ave/
Paxton St

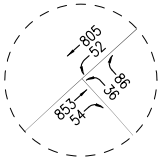

No. 17
Kewen Ave/
Paxton St

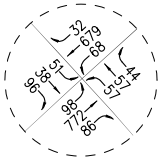

No. 18
Telfair Ave/
Paxton St

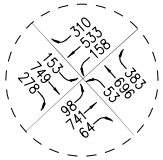

No. 19
San Fernando Rd/
Paxton St

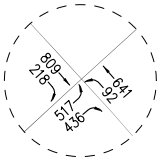

No. 20
San Fernando Rd/
SR-118 Fwy EB
Ramps

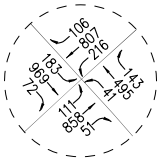

No. 21
San Fernando Rd/
Van Nuys Blvd

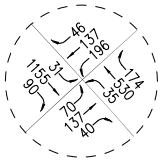

No. 22
San Fernando Rd/
Pierce St

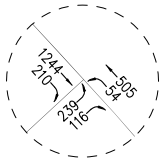

No. 23
San Fernando Rd/
Terra Bella St

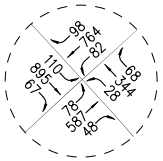

No. 24
San Fernando Rd/
Osborne St

N

NOT TO SCALE

APPENDIX FIGURE C1-4A
EXISTING WITH PROJECT TRAFFIC VOLUMES

ALTERNATIVE ROUTE 4 - WEEKDAY AM PEAK HOUR

PACOIMA SPREADING GROUNDS IMPROVEMENT PROJECT

LINSCOTT, LAW & GREENSPAN, engineers

o:\job_file\4056-2\dwg\opdx-c1-4a.dwg LDP 14:23:23 07/02/2015 rodriquez

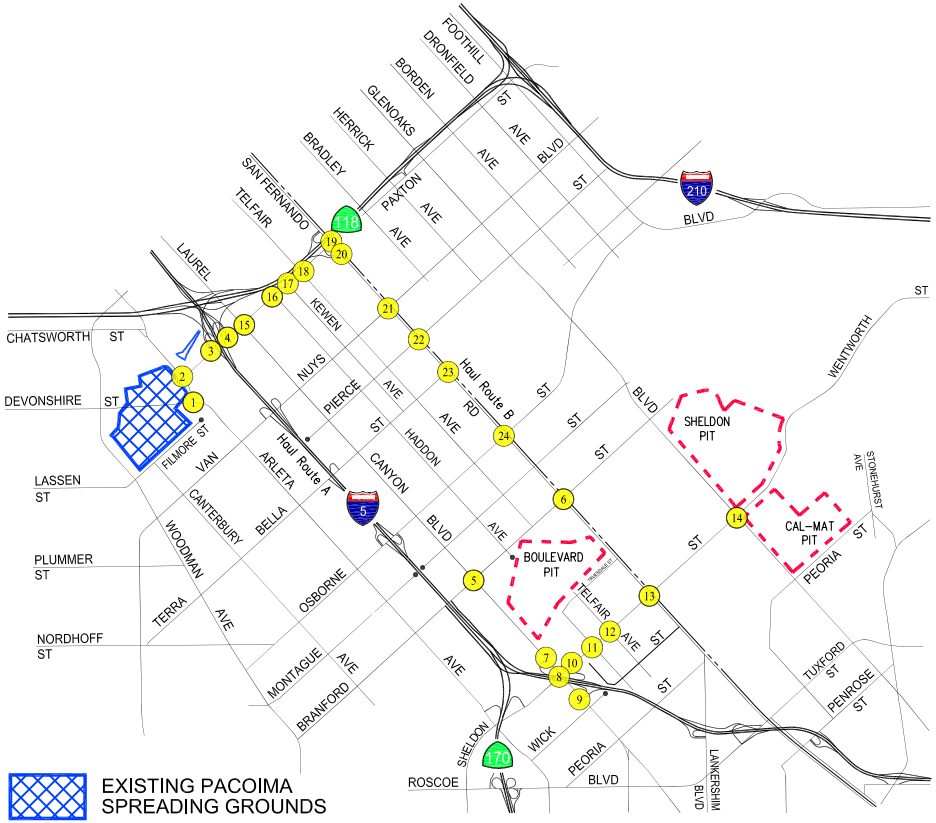

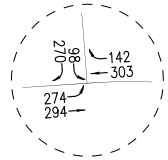

No. 1
Arleta Ave/
Devonshire St

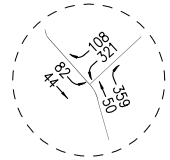

No. 2
Arleta Ave/
Paxton St

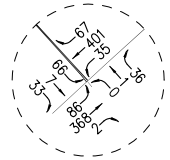

No. 3
I-5 Fwy SB
Ramps-Sharp Ave/
Paxton St

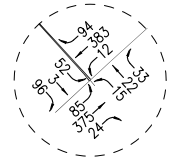

No. 4
I-5 Fwy NB
Ramps-Remick Ave/
Paxton St

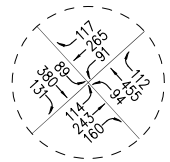

No. 5
Laurel Canyon Blvd/
Branford St

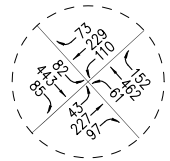

No. 6
San Fernando Rd/
Branford St

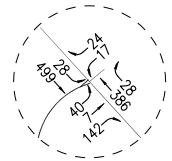

No. 7
Laurel Canyon
Blvd/I-5 Fwy NB
Off-Ramp-Jerome St

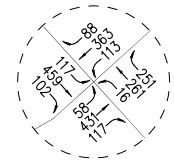

No. 8
Laurel Canyon Blvd/
Sheldon St

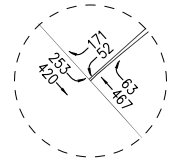

No. 9
Laurel Canyon Blvd/
I-5 Fwy SB Ramps

No. 10
I-5 Fwy NB
On-Ramp-Rincon
Ave/
Sheldon St

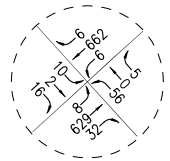

No. 11
Haddon Ave/
Sheldon St

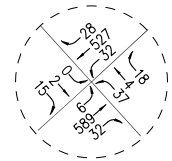

No. 12
Telfair Ave/
Sheldon St

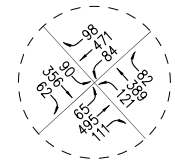

No. 13
San Fernando Rd/
Sheldon St

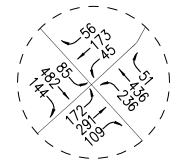

No. 14
Glenoaks Blvd/
Sheldon St

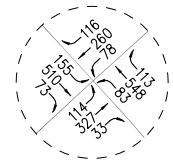

No. 15
Laurel Canyon Blvd/
Paxton St

No. 16
Haddon Ave/
Paxton St

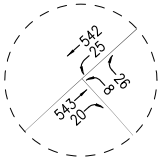

No. 17
Kewen Ave/
Paxton St

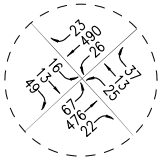

No. 18
Telfair Ave/
Paxton St

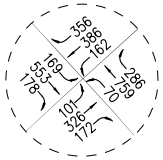

No. 19
San Fernando Rd/
Paxton St

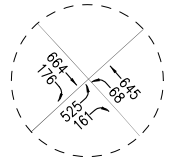

No. 20
San Fernando Rd/
SR-118 Fwy EB
Ramps

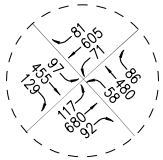

No. 21
San Fernando Rd/
Van Nuys Blvd

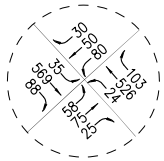

No. 22
San Fernando Rd/
Pierce St

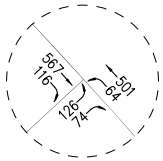

No. 23
San Fernando Rd/
Terra Bella St

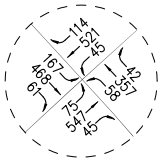

No. 24
San Fernando Rd/
Osborne St

N

NOT TO SCALE

APPENDIX FIGURE C1-4B
EXISTING WITH PROJECT TRAFFIC VOLUMES

ALTERNATIVE ROUTE 4 - WEEKDAY MID-DAY PEAK HOUR

PACOIMA SPREADING GROUNDS IMPROVEMENT PROJECT

LINSCOTT, LAW & GREENSPAN, engineers

o:\job_file\4056-2\dwg\opdx-c1-4b.dwg LDP 14:21:56 07/02/2015 rodriquez

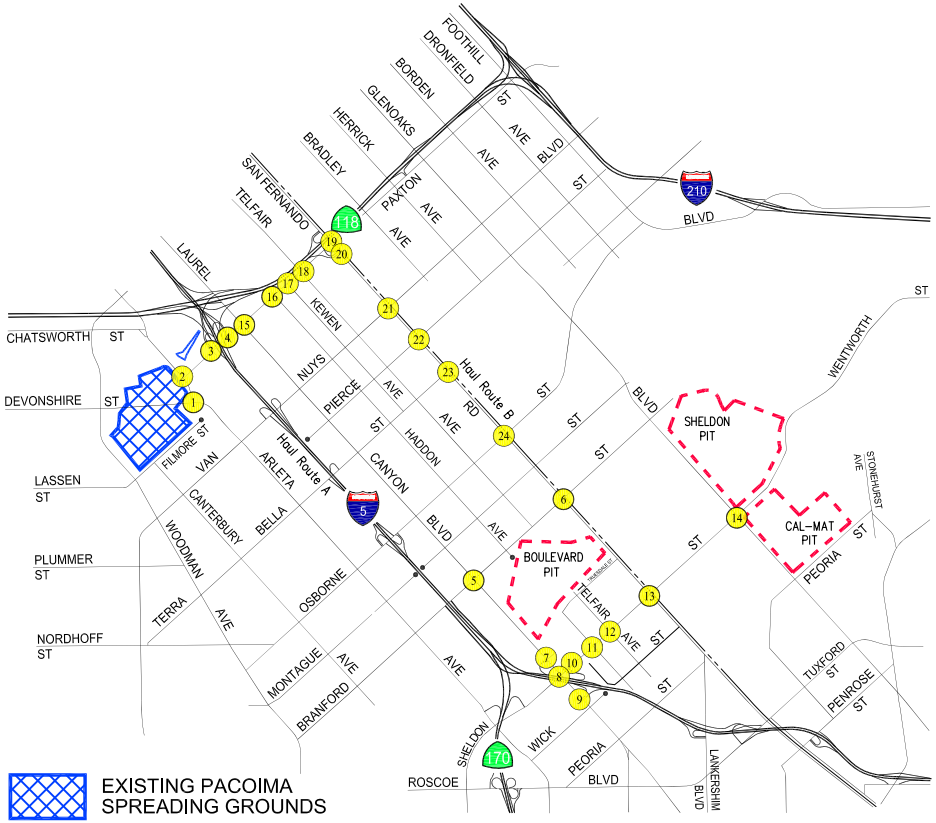

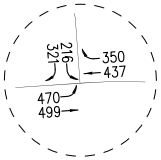

No. 1
Arleta Ave/
Devonshire St

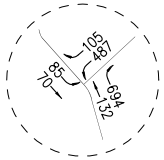

No. 2
Arleta Ave/
Paxton St

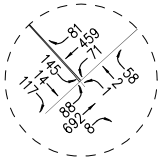

No. 3
I-5 Fwy SB
Ramps-Sharp Ave/
Paxton St

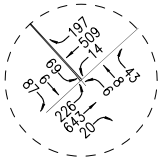

No. 4
I-5 Fwy NB
Ramps-Remick Ave/
Paxton St

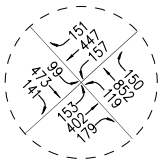

No. 5
Laurel Canyon Blvd/
Branford St

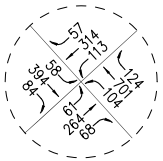

No. 6
San Fernando Rd/
Branford St

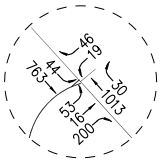

No. 7
Laurel Canyon
Blvd/I-5 Fwy NB
Off-Ramp-Jerome St

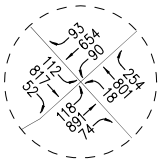

No. 8
Laurel Canyon Blvd/
Sheldon St

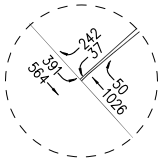

No. 9
Laurel Canyon Blvd/
I-5 Fwy SB Ramps

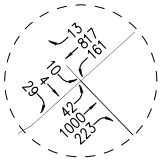

No. 10
I-5 Fwy NB
On-Ramp-Rincon
Ave/
Sheldon St

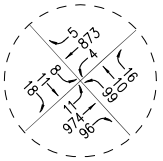

No. 11
Haddon Ave/
Sheldon St

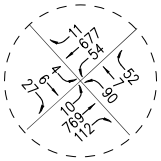

No. 12
Telfair Ave/
Sheldon St

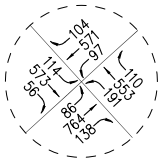

No. 13
San Fernando Rd/
Sheldon St

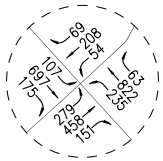

No. 14
Glenoaks Blvd/
Sheldon St

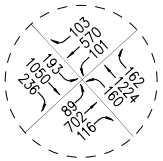

No. 15
Laurel Canyon Blvd/
Paxton St

No. 16
Haddon Ave/
Paxton St

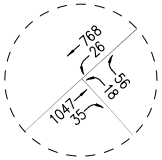

No. 17
Kewen Ave/
Paxton St

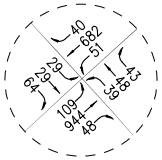

No. 18
Telfair Ave/
Paxton St

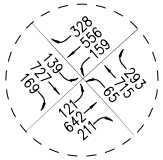

No. 19
San Fernando Rd/
Paxton St

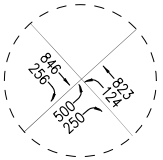

No. 20
San Fernando Rd/
SR-118 Fwy EB
Ramps

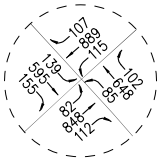

No. 21
San Fernando Rd/
Van Nuys Blvd

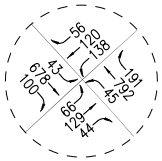

No. 22
San Fernando Rd/
Pierce St

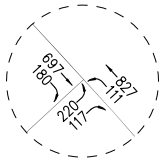

No. 23
San Fernando Rd/
Terra Bella St

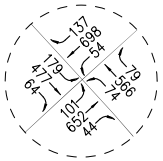

No. 24
San Fernando Rd/
Osborne St

N

NOT TO SCALE

APPENDIX FIGURE C1-4C
EXISTING WITH PROJECT TRAFFIC VOLUMES

ALTERNATIVE ROUTE 4 - WEEKDAY PM PEAK HOUR

PACOIMA SPREADING GROUNDS IMPROVEMENT PROJECT

LINSCOTT, LAW & GREENSPAN, engineers

o:\job_file\4056-2\dwg\opdx-c1-4c.dwg LDP 14:21:14 07/02/2015 rodriquez

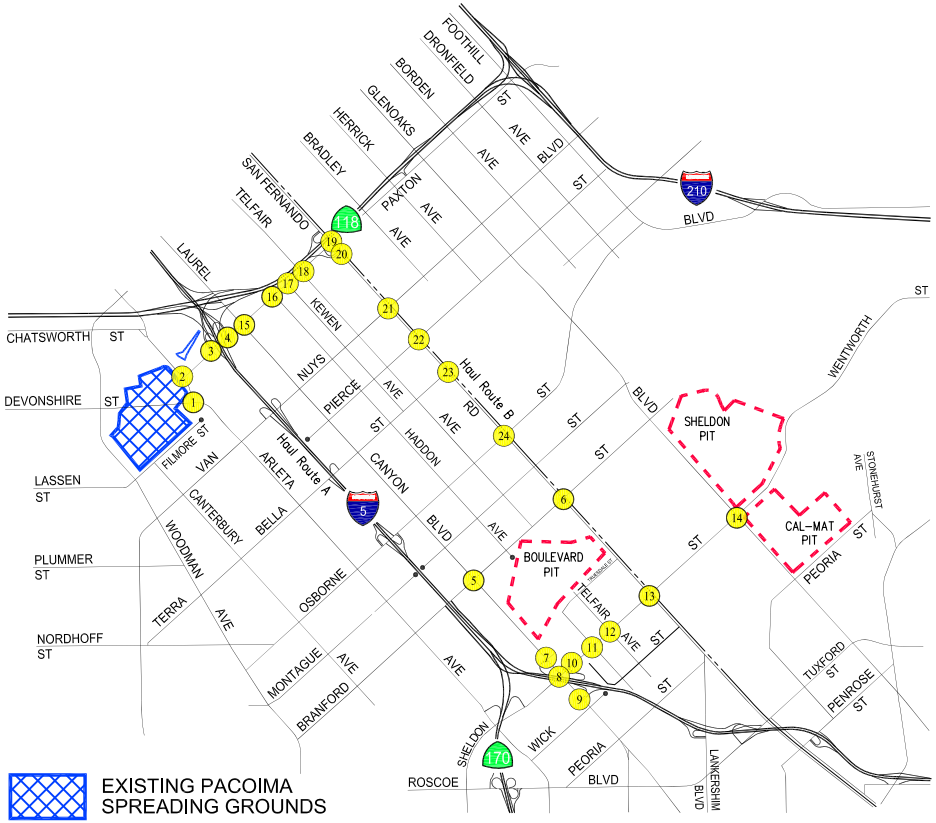

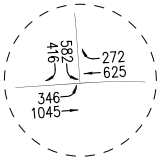

No. 1
Arleta Ave/
Devonshire St

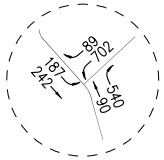

No. 2
Arleta Ave/
Paxton St

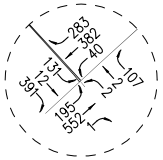

No. 3
I-5 Fwy SB
Ramps-Sharp Ave/
Paxton St

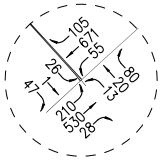

No. 4
I-5 Fwy NB
Ramps-Remick Ave/
Paxton St

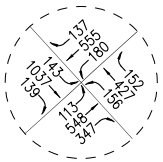

No. 5
Laurel Canyon Blvd/
Branford St

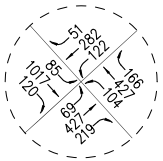

No. 6
San Fernando Rd/
Branford St

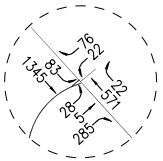

No. 7
Laurel Canyon
Blvd/I-5 Fwy NB
Off-Ramp-Jerome St

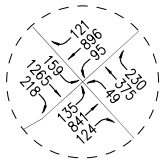

No. 8
Laurel Canyon Blvd/
Sheldon St

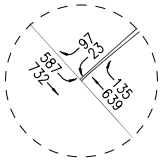

No. 9
Laurel Canyon Blvd/
I-5 Fwy SB Ramps

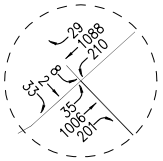

No. 10
I-5 Fwy NB
On-Ramp-Rincon
Ave/
Sheldon St

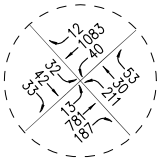

No. 11
Haddon Ave/
Sheldon St

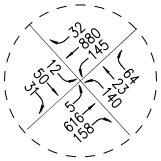

No. 12
Telfair Ave/
Sheldon St

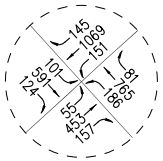

No. 13
San Fernando Rd/
Sheldon St

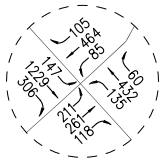

No. 14
Glenoaks Blvd/
Sheldon St

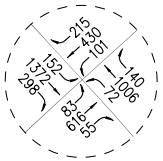

No. 15
Laurel Canyon Blvd/
Paxton St

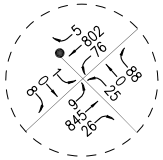

No. 16
Haddon Ave/
Paxton St

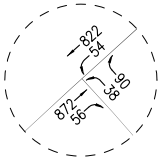

No. 17
Kewen Ave/
Paxton St

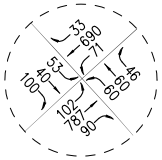

No. 18
Telfair Ave/
Paxton St

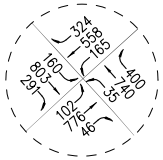

No. 19
San Fernando Rd/
Paxton St

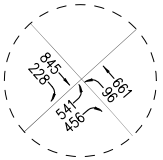

No. 20
San Fernando Rd/
SR-118 Fwy EB
Ramps

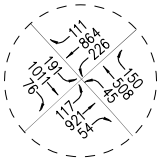

No. 21
San Fernando Rd/
Van Nuys Blvd

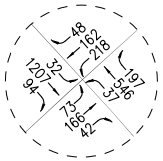

No. 22
San Fernando Rd/
Pierce St

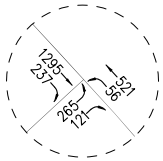

No. 23
San Fernando Rd/
Terra Bella St

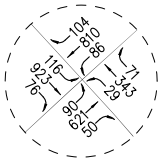

No. 24
San Fernando Rd/
Osborne St

N

NOT TO SCALE

APPENDIX FIGURE C2-A

YEAR 2018 CUMULATIVE WITHOUT PROJECT TRAFFIC VOLUMES

WEEDAY AM PEAK HOUR

PACOIMA SPREADING GROUNDS IMPROVEMENT PROJECT

LINSCOTT, LAW & GREENSPAN, engineers

o:\job_file\4056-2\dwg\opdx-c2-a.dwg LDP 14:20:53 07/02/2015 rodriguez

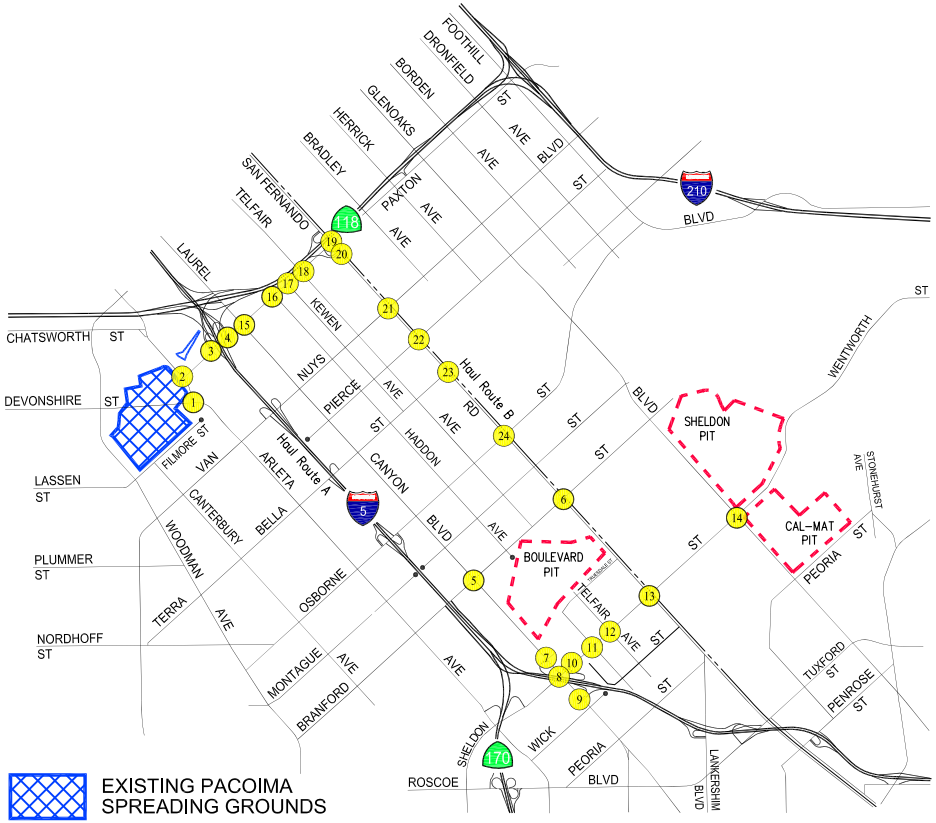

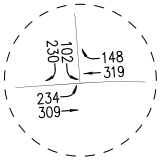

No. 1
Arleta Ave/
Devonshire St

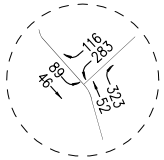

No. 2
Arleta Ave/
Paxton St

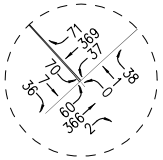

No. 3
I-5 Fwy SB
Ramps-Sharp Ave/
Paxton St

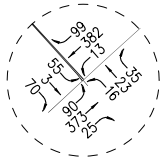

No. 4
I-5 Fwy NB
Ramps-Remick Ave/
Paxton St

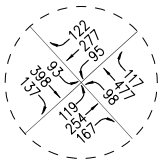

No. 5
Laurel Canyon Blvd/
Branford St

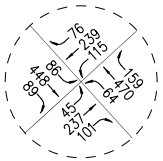

No. 6
San Fernando Rd/
Branford St

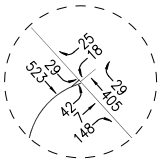

No. 7
Laurel Canyon
Blvd/I-5 Fwy NB
Off-Ramp-Jerome St

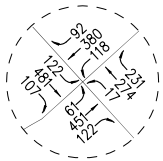

No. 8
Laurel Canyon Blvd/
Sheldon St

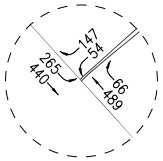

No. 9
Laurel Canyon Blvd/
I-5 Fwy SB Ramps

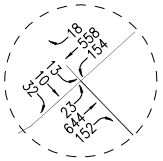

No. 10
I-5 Fwy NB
On-Ramp-Rincon
Ave/
Sheldon St

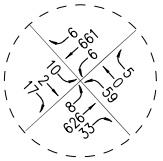

No. 11
Haddon Ave/
Sheldon St

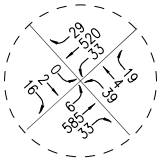

No. 12
Telfair Ave/
Sheldon St

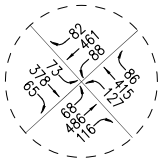

No. 13
San Fernando Rd/
Sheldon St

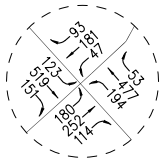

No. 14
Glenoaks Blvd/
Sheldon St

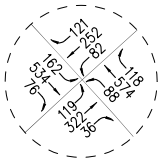

No. 15
Laurel Canyon Blvd/
Paxton St

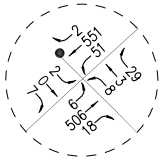

No. 16
Haddon Ave/
Paxton St

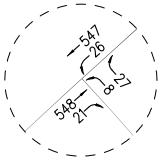

No. 17
Kewen Ave/
Paxton St

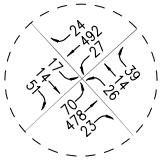

No. 18
Telfair Ave/
Paxton St

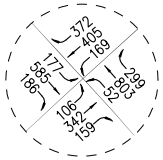

No. 19
San Fernando Rd/
Paxton St

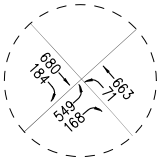

No. 20
San Fernando Rd/
SR-118 Fwy EB
Ramps

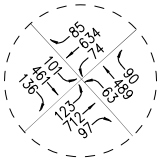

No. 21
San Fernando Rd/
Van Nuys Blvd

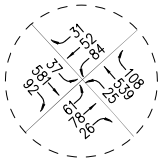

No. 22
San Fernando Rd/
Pierce St

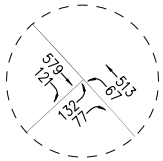

No. 23
San Fernando Rd/
Terra Bella St

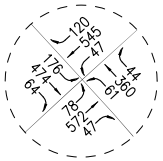

No. 24
San Fernando Rd/
Osborne St

N

NOT TO SCALE

APPENDIX FIGURE C2-B

YEAR 2018 CUMULATIVE WITHOUT PROJECT TRAFFIC VOLUMES

WEEDAY MID-DAY PEAK HOUR

PACOIMA SPREADING GROUNDS IMPROVEMENT PROJECT

LINSCOTT, LAW & GREENSPAN, engineers

o:\job_file\4056-2\dwg\opdx-c2-b.dwg LDP 14:20:26 07/02/2015 rodriguez

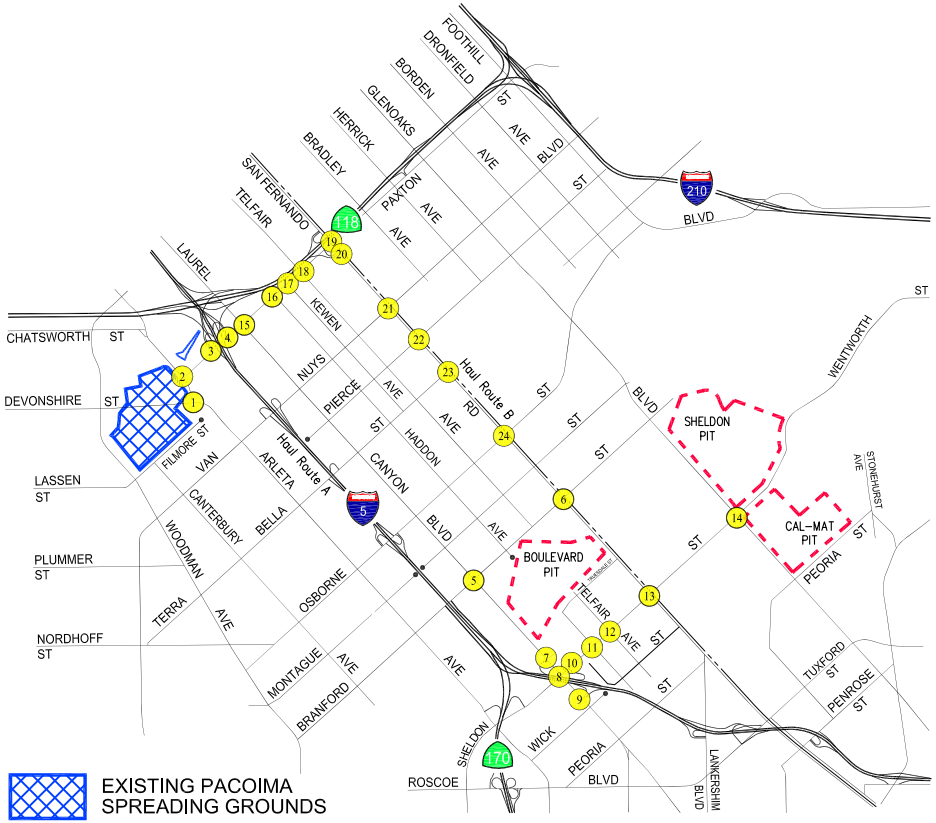

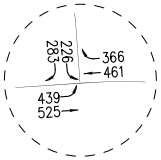

No. 1
Arleta Ave/
Devonshire St

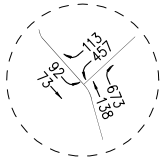

No. 2
Arleta Ave/
Paxton St

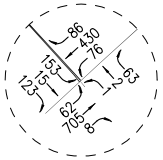

No. 3
I-5 Fwy SB
Ramps-Sharp Ave/
Paxton St

No. 4
I-5 Fwy NB
Ramps-Remick Ave/
Paxton St

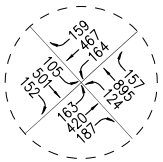

No. 5
Laurel Canyon Blvd/
Branford St

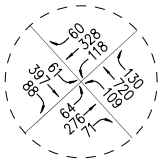

No. 6
San Fernando Rd/
Branford St

No. 7
Laurel Canyon
Blvd/I-5 Fwy NB
Off-Ramp-Jerome St

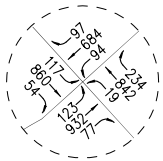

No. 8
Laurel Canyon Blvd/
Sheldon St

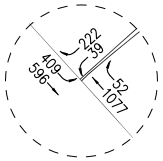

No. 9
Laurel Canyon Blvd/
I-5 Fwy SB Ramps

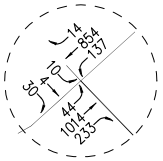

No. 10
I-5 Fwy NB
On-Ramp-Rincon
Ave/
Sheldon St

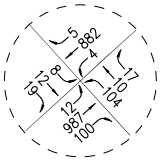

No. 11
Haddon Ave/
Sheldon St

No. 12
Telfair Ave/
Sheldon St

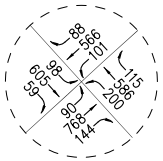

No. 13
San Fernando Rd/
Sheldon St

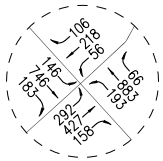

No. 14
Glenoaks Blvd/
Sheldon St

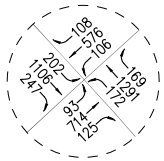

No. 15
Laurel Canyon Blvd/
Paxton St

No. 16
Haddon Ave/
Paxton St

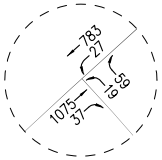

No. 17
Kewen Ave/
Paxton St

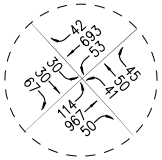

No. 18
Telfair Ave/
Paxton St

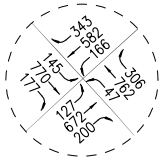

No. 19
San Fernando Rd/
Paxton St

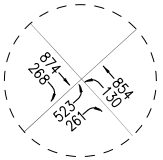

No. 20
San Fernando Rd/
SR-118 Fwy EB
Ramps

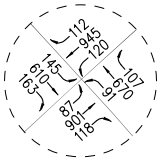

No. 21
San Fernando Rd/
Van Nuys Blvd

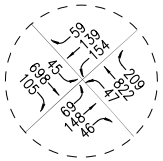

No. 22
San Fernando Rd/
Pierce St

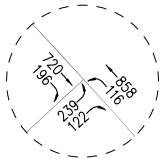

No. 23
San Fernando Rd/
Terra Bella St

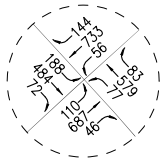

No. 24
San Fernando Rd/
Osborne St

NOT TO SCALE

APPENDIX FIGURE C2-C

YEAR 2018 CUMULATIVE WITHOUT PROJECT TRAFFIC VOLUMES

WEEDAY PM PEAK HOUR

PACOIMA SPREADING GROUNDS IMPROVEMENT PROJECT

LINSCOTT, LAW & GREENSPAN, engineers

o:\job_file\4056-2\dwg\opdx-c2-c.dwg LDP 14:20:04 07/02/2015 rodriquez

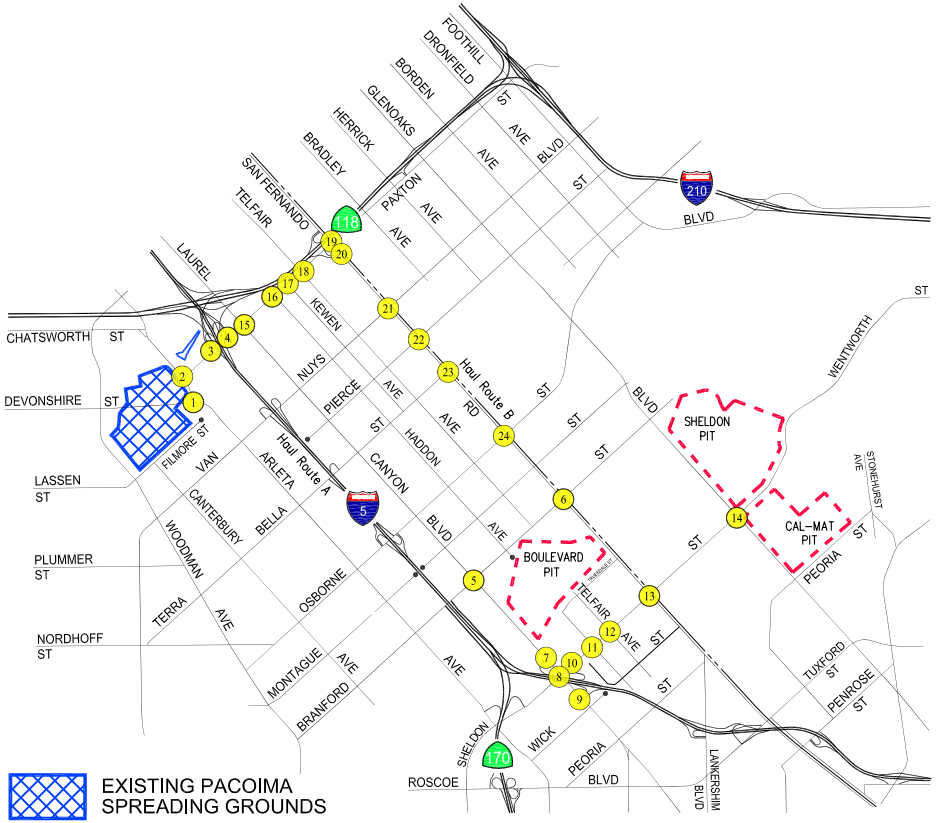

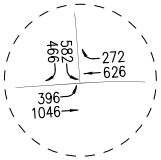

No. 1
Arleta Ave/
Devonshire St

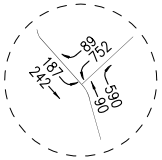

No. 2
Arleta Ave/
Paxton St

No. 3
I-5 Fwy SB
Ramps-Sharp Ave/
Paxton St

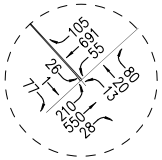

No. 4
I-5 Fwy NB
Ramps-Remick Ave/
Paxton St

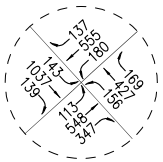

No. 5
Laurel Canyon Blvd/
Branford St

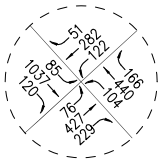

No. 6
San Fernando Rd/
Branford St

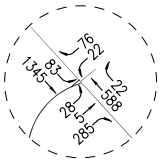

No. 7
Laurel Canyon
Blvd/I-5 Fwy NB
Off-Ramp-Jerome St

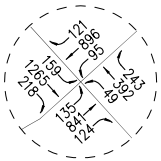

No. 8
Laurel Canyon Blvd/
Sheldon St

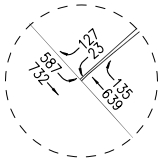

No. 9
Laurel Canyon Blvd/
I-5 Fwy SB Ramps

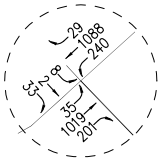

No. 10
I-5 Fwy NB
On-Ramp-Rincon
Ave/
Sheldon St

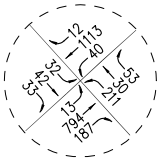

No. 11
Haddon Ave/
Sheldon St

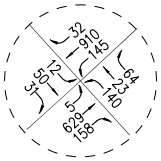

No. 12
Telfair Ave/
Sheldon St

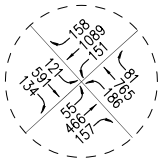

No. 13
San Fernando Rd/
Sheldon St

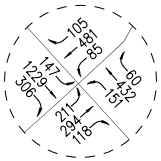

No. 14
Glenoaks Blvd/
Sheldon St

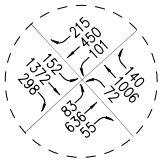

No. 15
Laurel Canyon Blvd/
Paxton St

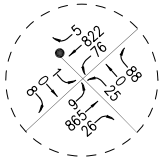

No. 16
Haddon Ave/
Paxton St

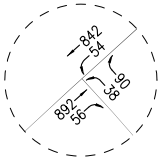

No. 17
Kewen Ave/
Paxton St

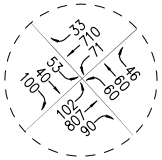

No. 18
Telfair Ave/
Paxton St

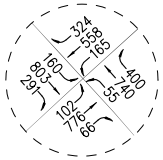

No. 19
San Fernando Rd/
Paxton St

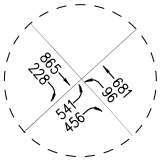

No. 20
San Fernando Rd/
SR-118 Fwy EB
Ramps

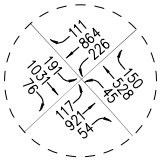

No. 21
San Fernando Rd/
Van Nuys Blvd

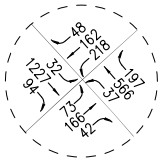

No. 22
San Fernando Rd/
Pierce St

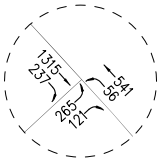

No. 23
San Fernando Rd/
Terra Bella St

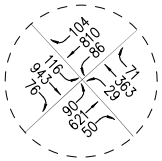

No. 24
San Fernando Rd/
Osborne St

N

NOT TO SCALE

APPENDIX FIGURE C3-1A

YEAR 2018 CUMULATIVE WITH PROJECT TRAFFIC VOLUMES

ALTERNATIVE ROUTE 1 - WEEDAY AM PEAK HOUR

PACOIMA SPREADING GROUNDS IMPROVEMENT PROJECT

LINSCOTT, LAW & GREENSPAN, engineers

o:\job_file\4056-2\dwg\opdx-c3-1a.dwg LDP 14:19:39 07/02/2015 rodriquez

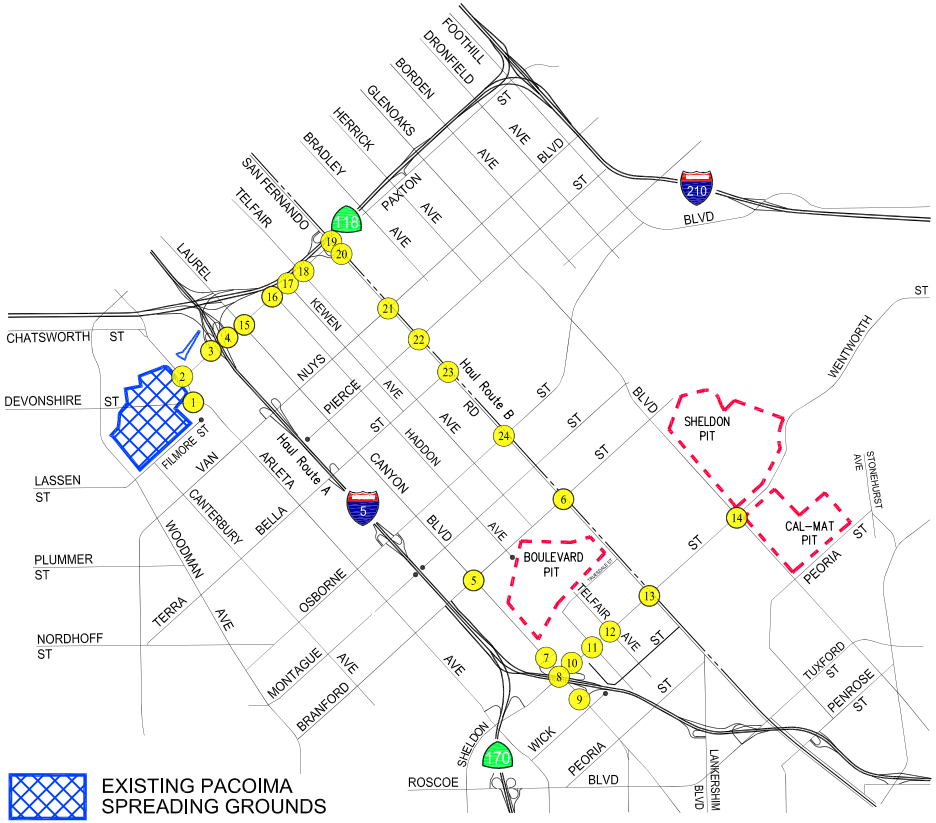

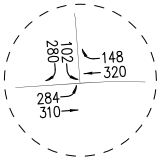

No. 1
Arleta Ave/
Devonshire St

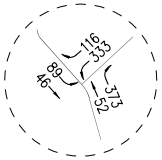

No. 2
Arleta Ave/
Paxton St

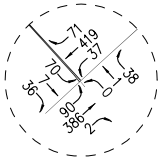

No. 3
I-5 Fwy SB
Ramps-Sharp Ave/
Paxton St

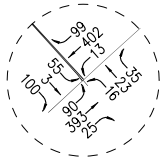

No. 4
I-5 Fwy NB
Ramps-Remick Ave/
Paxton St

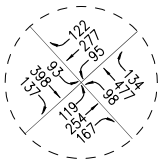

No. 5
Laurel Canyon Blvd/
Branford St

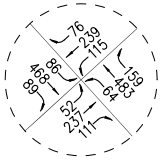

No. 6
San Fernando Rd/
Branford St

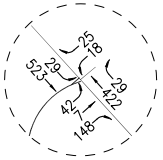

No. 7
Laurel Canyon
Blvd/I-5 Fwy NB
Off-Ramp-Jerome St

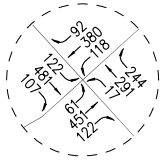

No. 8
Laurel Canyon Blvd/
Sheldon St

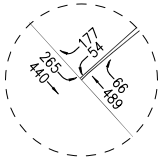

No. 9
Laurel Canyon Blvd/
I-5 Fwy SB Ramps

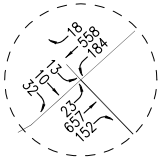

No. 10
I-5 Fwy NB
On-Ramp-Rincon
Ave/
Sheldon St

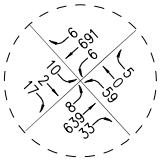

No. 11
Haddon Ave/
Sheldon St

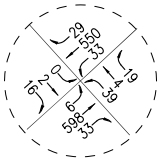

No. 12
Telfair Ave/
Sheldon St

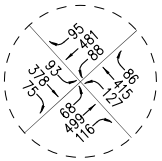

No. 13
San Fernando Rd/
Sheldon St

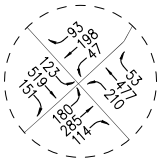

No. 14
Glenoaks Blvd/
Sheldon St

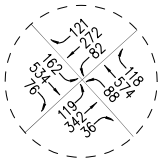

No. 15
Laurel Canyon Blvd/
Paxton St

No. 16
Haddon Ave/
Paxton St

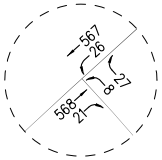

No. 17
Kewen Ave/
Paxton St

No. 18
Telfair Ave/
Paxton St

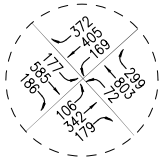

No. 19
San Fernando Rd/
Paxton St

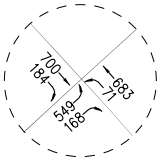

No. 20
San Fernando Rd/
SR-118 Fwy EB
Ramps

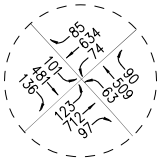

No. 21
San Fernando Rd/
Van Nuys Blvd

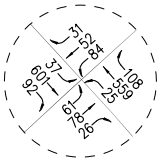

No. 22
San Fernando Rd/
Pierce St

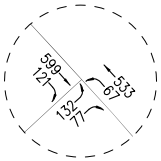

No. 23
San Fernando Rd/
Terra Bella St

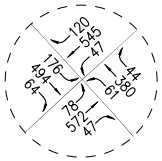

No. 24
San Fernando Rd/
Osborne St

N

NOT TO SCALE

APPENDIX FIGURE C3-1B

YEAR 2018 CUMULATIVE WITH PROJECT TRAFFIC VOLUMES

ALTERNATIVE ROUTE 1 - WEEDAY MID-DAY PEAK HOUR

PACOIMA SPREADING GROUNDS IMPROVEMENT PROJECT

LINSCOTT, LAW & GREENSPAN, engineers

o:\job_file\4056-2\dwg\opdx-c3-1b.dwg LDP 14:19:18 07/02/2015 rodriquez

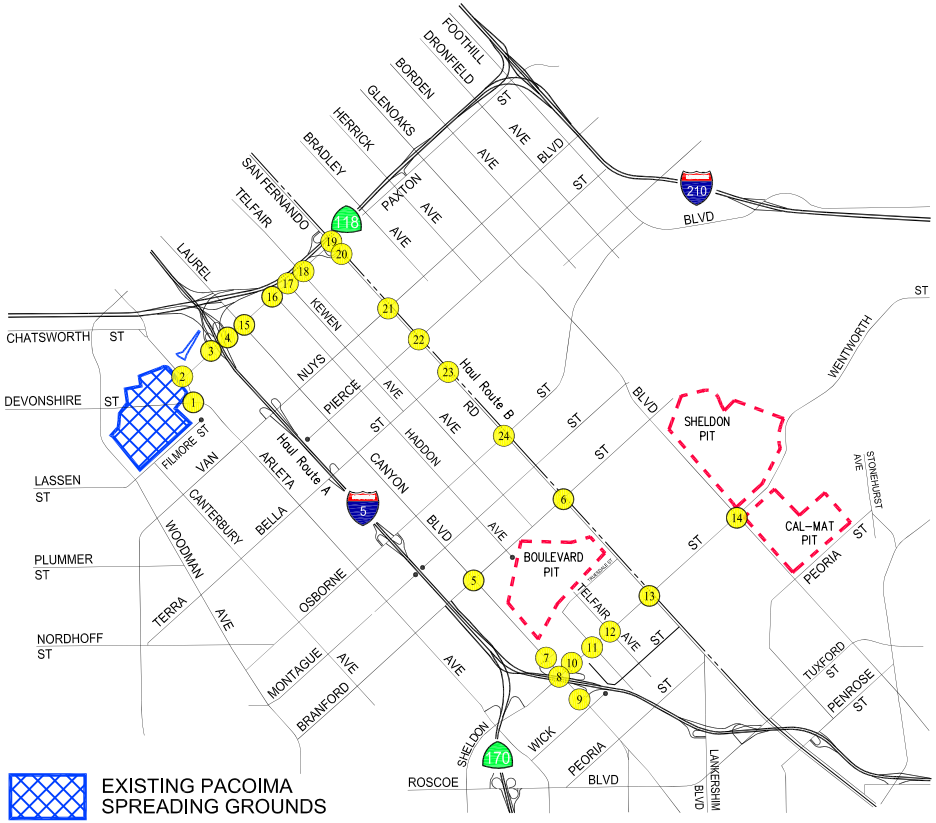

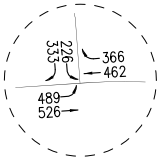

No. 1
Arleta Ave/
Devonshire St

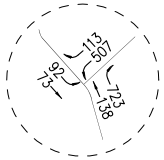

No. 2
Arleta Ave/
Paxton St

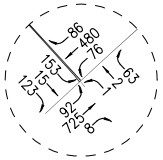

No. 3
I-5 Fwy SB
Ramps-Sharp Ave/
Paxton St

No. 4
I-5 Fwy NB
Ramps-Remick Ave/
Paxton St

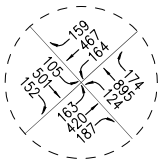

No. 5
Laurel Canyon Blvd/
Branford St

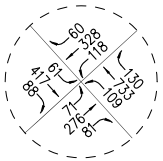

No. 6
San Fernando Rd/
Branford St

No. 7
Laurel Canyon
Blvd/I-5 Fwy NB
Off-Ramp-Jerome St

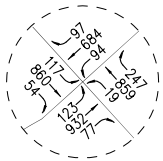

No. 8
Laurel Canyon Blvd/
Sheldon St

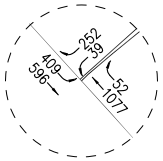

No. 9
Laurel Canyon Blvd/
I-5 Fwy SB Ramps

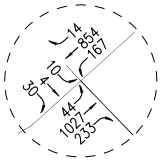

No. 10
I-5 Fwy NB
On-Ramp-Rincon
Ave/
Sheldon St

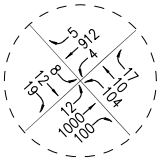

No. 11
Haddon Ave/
Sheldon St

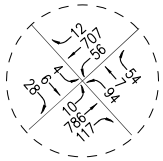

No. 12
Telfair Ave/
Sheldon St

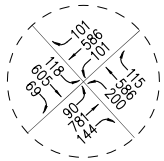

No. 13
San Fernando Rd/
Sheldon St

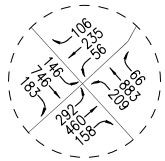

No. 14
Glenoaks Blvd/
Sheldon St

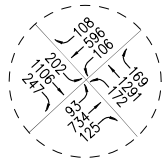

No. 15
Laurel Canyon Blvd/
Paxton St

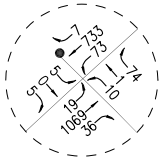

No. 16
Haddon Ave/
Paxton St

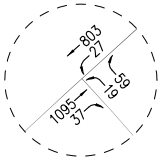

No. 17
Kewen Ave/
Paxton St

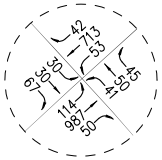

No. 18
Telfair Ave/
Paxton St

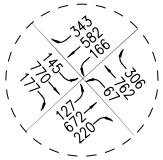

No. 19
San Fernando Rd/
Paxton St

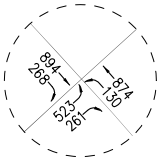

No. 20
San Fernando Rd/
SR-118 Fwy EB
Ramps

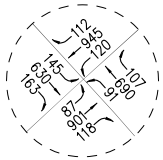

No. 21
San Fernando Rd/
Van Nuys Blvd

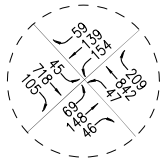

No. 22
San Fernando Rd/
Pierce St

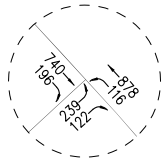

No. 23
San Fernando Rd/
Terra Bella St

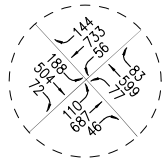

No. 24
San Fernando Rd/
Osborne St

NOT TO SCALE

APPENDIX FIGURE C3-1C
YEAR 2018 CUMULATIVE WITH PROJECT TRAFFIC VOLUMES

ALTERNATIVE ROUTE 1 - WEEDAY PM PEAK HOUR

PACOIMA SPREADING GROUNDS IMPROVEMENT PROJECT

LINSCOTT, LAW & GREENSPAN, engineers

o:\job_file\4056-2\dwg\opdx-c3-1c.dwg LDP 14:18:58 07/02/2015 rodriquez

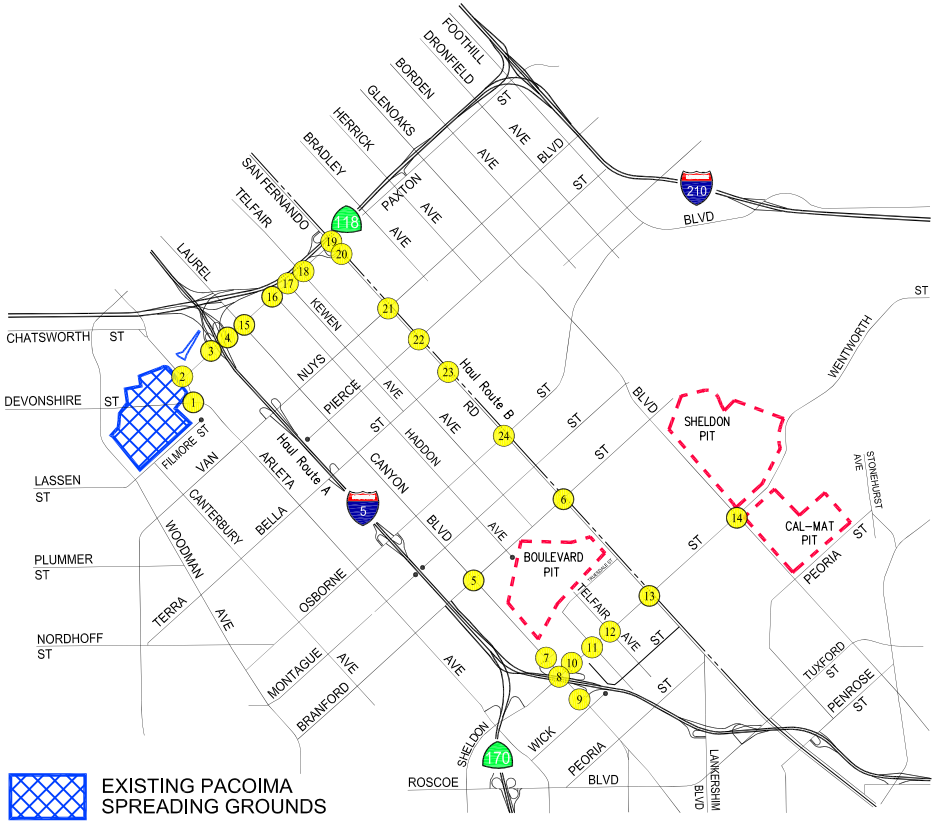

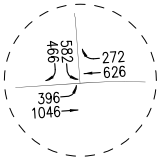

No. 1
Arleta Ave/
Devonshire St

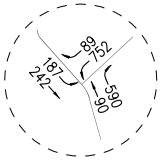

No. 2
Arleta Ave/
Paxton St

No. 3
I-5 Fwy SB
Ramps-Sharp Ave/
Paxton St

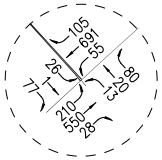

No. 4
I-5 Fwy NB
Ramps-Remick Ave/
Paxton St

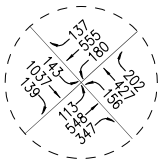

No. 5
Laurel Canyon Blvd/
Branford St

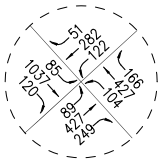

No. 6
San Fernando Rd/
Branford St

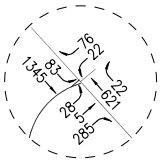

No. 7
Laurel Canyon
Blvd/I-5 Fwy NB
Off-Ramp-Jerome St

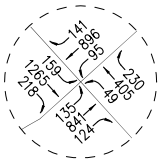

No. 8
Laurel Canyon Blvd/
Sheldon St

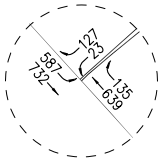

No. 9
Laurel Canyon Blvd/
I-5 Fwy SB Ramps

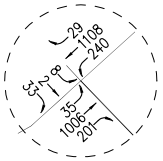

No. 10
I-5 Fwy NB
On-Ramp-Rincon
Ave/
Sheldon St

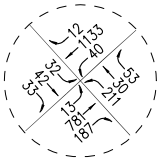

No. 11
Haddon Ave/
Sheldon St

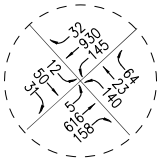

No. 12
Telfair Ave/
Sheldon St

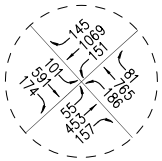

No. 13
San Fernando Rd/
Sheldon St

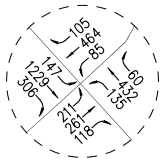

No. 14
Glenoaks Blvd/
Sheldon St

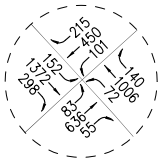

No. 15
Laurel Canyon Blvd/
Paxton St

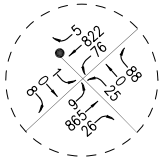

No. 16
Haddon Ave/
Paxton St

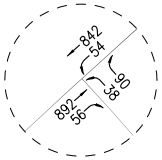

No. 17
Kewen Ave/
Paxton St

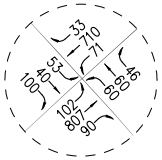

No. 18
Telfair Ave/
Paxton St

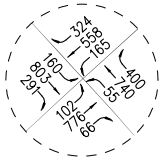

No. 19
San Fernando Rd/
Paxton St

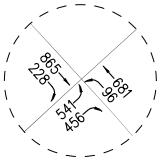

No. 20
San Fernando Rd/
SR-118 Fwy EB
Ramps

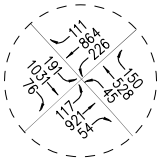

No. 21
San Fernando Rd/
Van Nuys Blvd

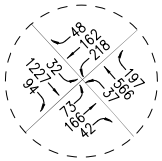

No. 22
San Fernando Rd/
Pierce St

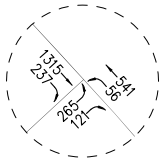

No. 23
San Fernando Rd/
Terra Bella St

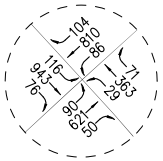

No. 24
San Fernando Rd/
Osborne St

N

NOT TO SCALE

APPENDIX FIGURE C3-2A

YEAR 2018 CUMULATIVE WITH PROJECT TRAFFIC VOLUMES

ALTERNATIVE ROUTE 2 - WEEDAY AM PEAK HOUR

PACOIMA SPREADING GROUNDS IMPROVEMENT PROJECT

LINSCOTT, LAW & GREENSPAN, engineers

o:\job_file\4056-2\dwg\opdx-c3-2a.dwg LDP 14:18:35 07/02/2015 rodriquez

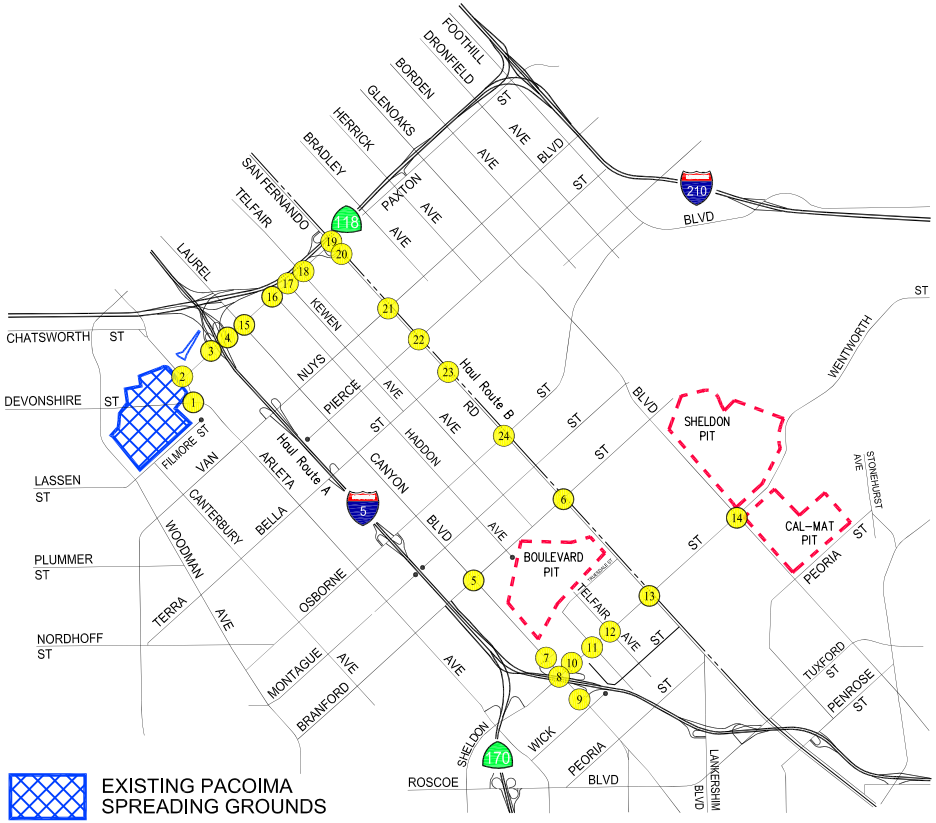

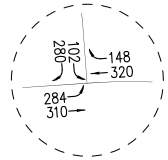

No. 1
Arleta Ave/
Devonshire St

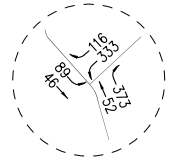

No. 2
Arleta Ave/
Paxton St

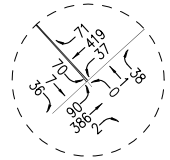

No. 3
I-5 Fwy SB
Ramps-Sharp Ave/
Paxton St

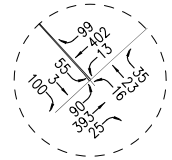

No. 4
I-5 Fwy NB
Ramps-Remick Ave/
Paxton St

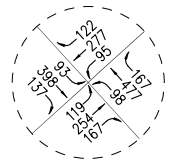

No. 5
Laurel Canyon Blvd/
Branford St

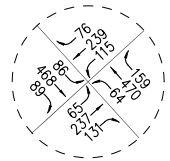

No. 6
San Fernando Rd/
Branford St

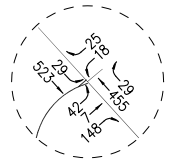

No. 7
Laurel Canyon
Blvd/I-5 Fwy NB
Off-Ramp-Jerome St

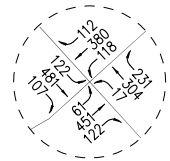

No. 8
Laurel Canyon Blvd/
Sheldon St

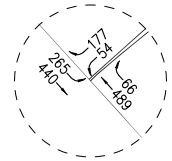

No. 9
Laurel Canyon Blvd/
I-5 Fwy SB Ramps

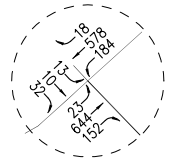

No. 10
I-5 Fwy NB
On-Ramp-Rincon
Ave/
Sheldon St

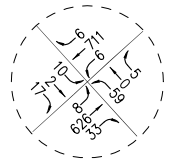

No. 11
Haddon Ave/
Sheldon St

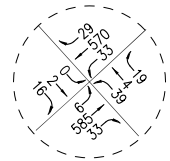

No. 12
Telfair Ave/
Sheldon St

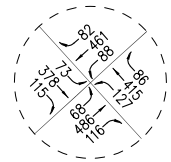

No. 13
San Fernando Rd/
Sheldon St

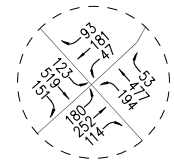

No. 14
Glenoaks Blvd/
Sheldon St

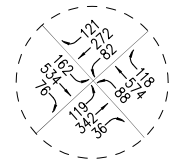

No. 15
Laurel Canyon Blvd/
Paxton St

No. 16
Haddon Ave/
Paxton St

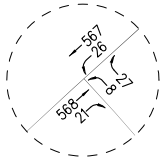

No. 17
Kewen Ave/
Paxton St

No. 18
Telfair Ave/
Paxton St

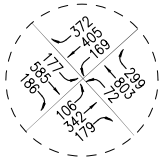

No. 19
San Fernando Rd/
Paxton St

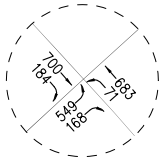

No. 20
San Fernando Rd/
SR-118 Fwy EB
Ramps

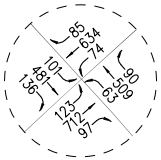

No. 21
San Fernando Rd/
Van Nuys Blvd

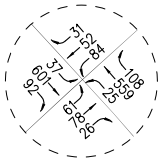

No. 22
San Fernando Rd/
Pierce St

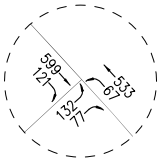

No. 23
San Fernando Rd/
Terra Bella St

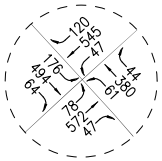

No. 24
San Fernando Rd/
Osborne St

N

NOT TO SCALE

APPENDIX FIGURE C3-2B

YEAR 2018 CUMULATIVE WITH PROJECT TRAFFIC VOLUMES

ALTERNATIVE ROUTE 2 - WEEDAY MID-DAY PEAK HOUR

PACOIMA SPREADING GROUNDS IMPROVEMENT PROJECT

LINSCOTT, LAW & GREENSPAN, engineers

o:\job_file\4056-2\dwg\opdx-c3-2b.dwg LDP 14:18:12 07/02/2015 rodriquez

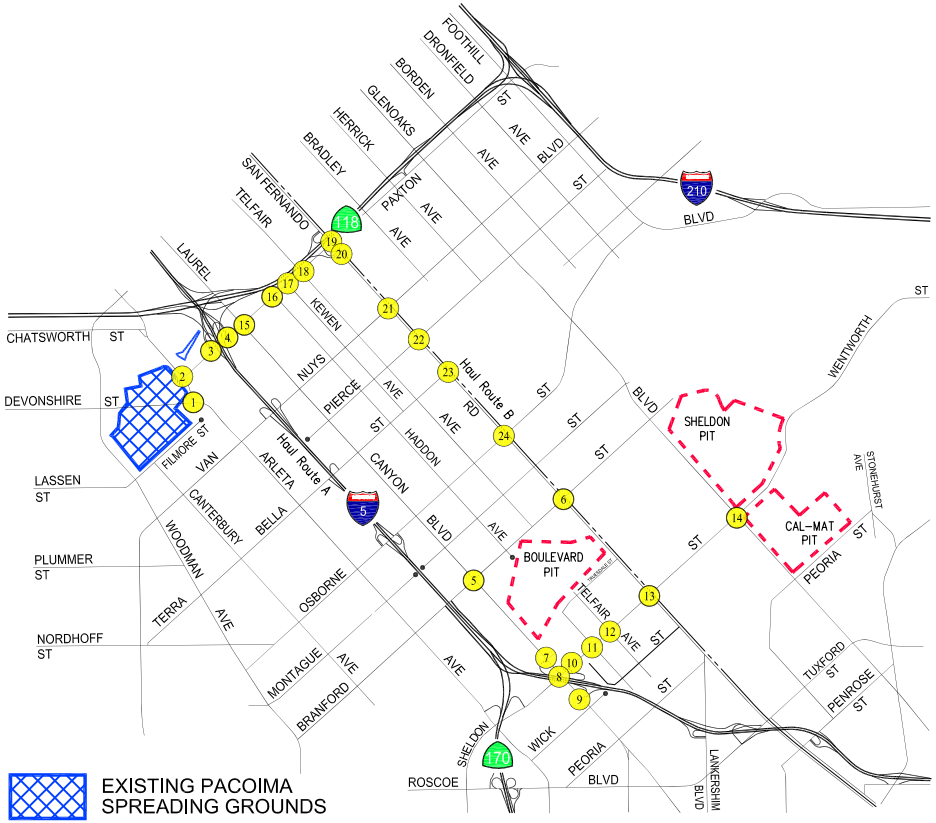

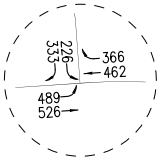

No. 1
Arleta Ave/
Devonshire St

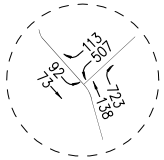

No. 2
Arleta Ave/
Paxton St

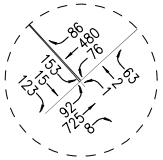

No. 3
I-5 Fwy SB
Ramps-Sharp Ave/
Paxton St

No. 4
I-5 Fwy NB
Ramps-Remick Ave/
Paxton St

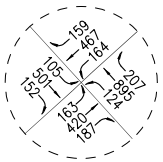

No. 5
Laurel Canyon Blvd/
Branford St

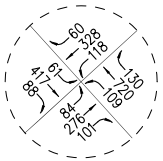

No. 6
San Fernando Rd/
Branford St

No. 7
Laurel Canyon
Blvd/I-5 Fwy NB
Off-Ramp-Jerome St

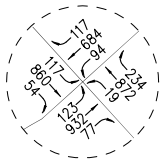

No. 8
Laurel Canyon Blvd/
Sheldon St

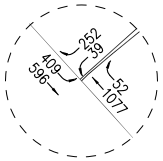

No. 9
Laurel Canyon Blvd/
I-5 Fwy SB Ramps

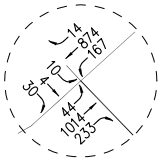

No. 10
I-5 Fwy NB
On-Ramp-Rincon
Ave/
Sheldon St

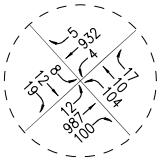

No. 11
Haddon Ave/
Sheldon St

No. 12
Telfair Ave/
Sheldon St

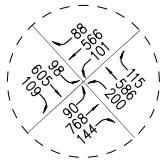

No. 13
San Fernando Rd/
Sheldon St

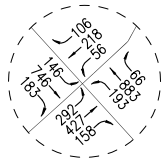

No. 14
Glenoaks Blvd/
Sheldon St

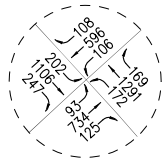

No. 15
Laurel Canyon Blvd/
Paxton St

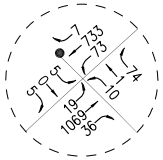

No. 16
Haddon Ave/
Paxton St

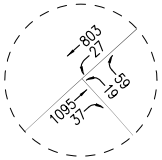

No. 17
Kewen Ave/
Paxton St

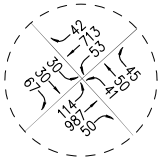

No. 18
Telfair Ave/
Paxton St

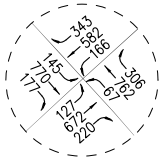

No. 19
San Fernando Rd/
Paxton St

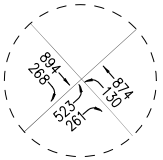

No. 20
San Fernando Rd/
SR-118 Fwy EB
Ramps

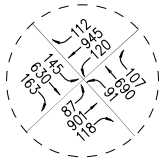

No. 21
San Fernando Rd/
Van Nuys Blvd

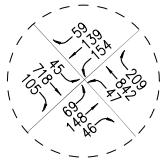

No. 22
San Fernando Rd/
Pierce St

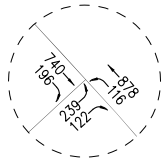

No. 23
San Fernando Rd/
Terra Bella St

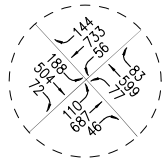

No. 24
San Fernando Rd/
Osborne St

N

NOT TO SCALE

APPENDIX FIGURE C3-2C
YEAR 2018 CUMULATIVE WITH PROJECT TRAFFIC VOLUMES

ALTERNATIVE ROUTE 2 - WEEDAY PM PEAK HOUR

PACOIMA SPREADING GROUNDS IMPROVEMENT PROJECT

LINSCOTT, LAW & GREENSPAN, engineers

o:\job_file\4056-2\dwg\opdx-c3-2c.dwg LDP 14:17:51 07/02/2015 rodriquez

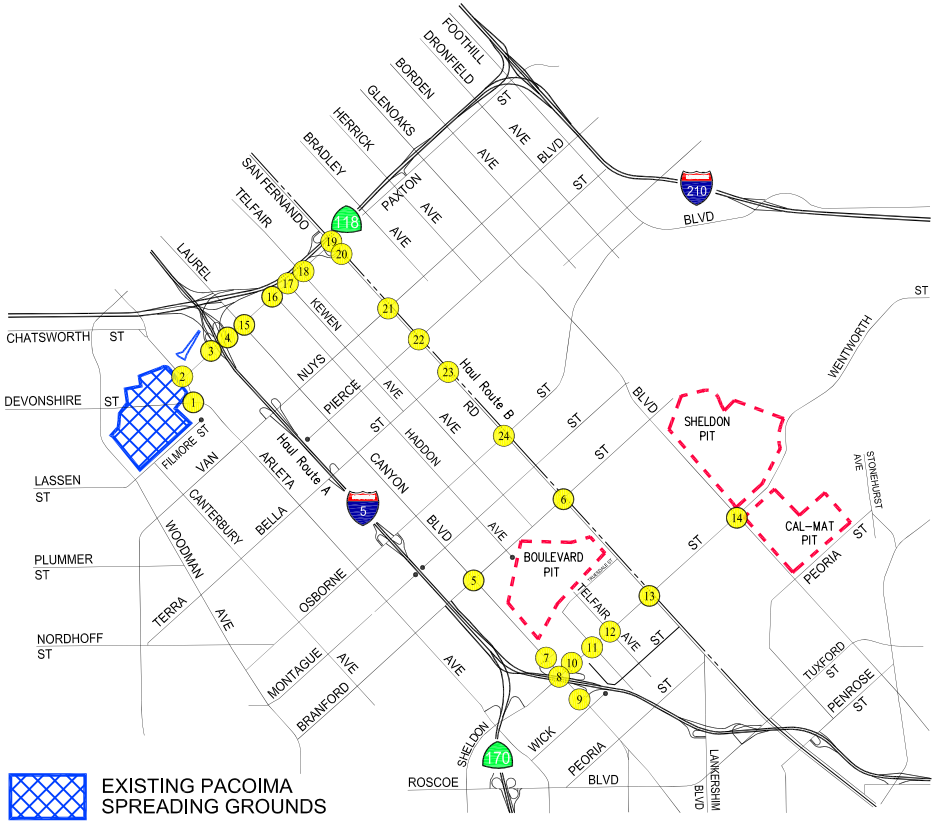

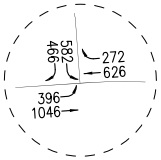

No. 1
Arleta Ave/
Devonshire St

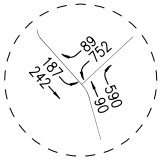

No. 2
Arleta Ave/
Paxton St

No. 3
I-5 Fwy SB
Ramps-Sharp Ave/
Paxton St

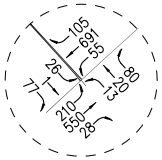

No. 4
I-5 Fwy NB
Ramps-Remick Ave/
Paxton St

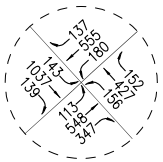

No. 5
Laurel Canyon Blvd/
Branford St

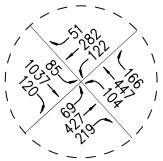

No. 6
San Fernando Rd/
Branford St

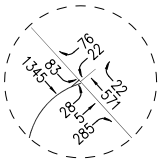

No. 7
Laurel Canyon
Blvd/I-5 Fwy NB
Off-Ramp-Jerome St

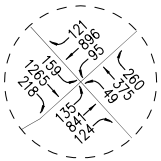

No. 8
Laurel Canyon Blvd/
Sheldon St

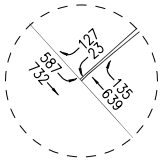

No. 9
Laurel Canyon Blvd/
I-5 Fwy SB Ramps

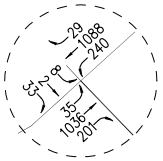

No. 10
I-5 Fwy NB
On-Ramp-Rincon
Ave/
Sheldon St

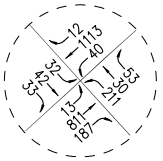

No. 11
Haddon Ave/
Sheldon St

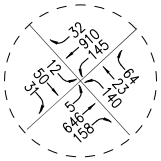

No. 12
Telfair Ave/
Sheldon St

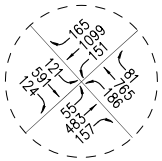

No. 13
San Fernando Rd/
Sheldon St

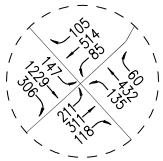

No. 14
Glenoaks Blvd/
Sheldon St

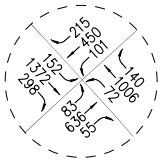

No. 15
Laurel Canyon Blvd/
Paxton St

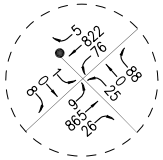

No. 16
Haddon Ave/
Paxton St

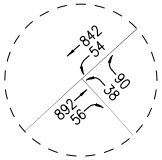

No. 17
Kewen Ave/
Paxton St

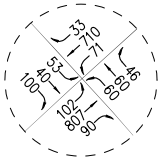

No. 18
Telfair Ave/
Paxton St

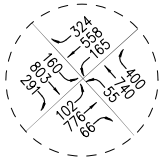

No. 19
San Fernando Rd/
Paxton St

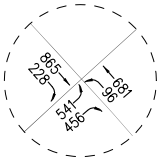

No. 20
San Fernando Rd/
SR-118 Fwy EB
Ramps

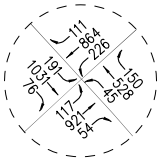

No. 21
San Fernando Rd/
Van Nuys Blvd

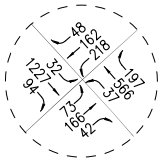

No. 22
San Fernando Rd/
Pierce St

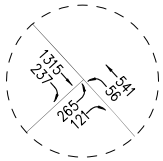

No. 23
San Fernando Rd/
Terra Bella St

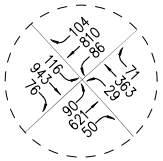

No. 24
San Fernando Rd/
Osborne St

N

NOT TO SCALE

APPENDIX FIGURE C3-3A

YEAR 2018 CUMULATIVE WITH PROJECT TRAFFIC VOLUMES

ALTERNATIVE ROUTE 3 - WEEDAY AM PEAK HOUR

PACOIMA SPREADING GROUNDS IMPROVEMENT PROJECT

LINSCOTT, LAW & GREENSPAN, engineers

o:\job_file\4056-2\dwg\opdx-c3-3a.dwg LDP 14:17:25 07/02/2015 rodriquez

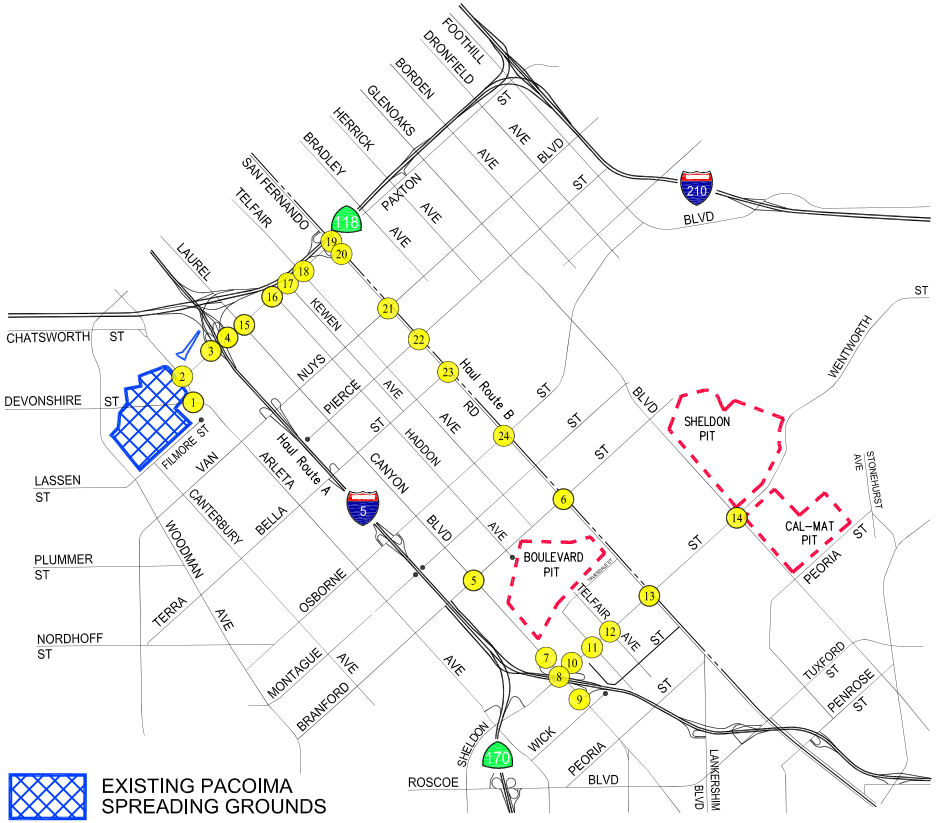

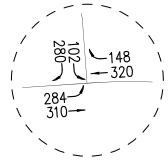

No. 1
Arleta Ave/
Devonshire St

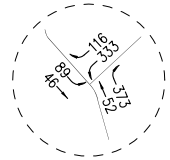

No. 2
Arleta Ave/
Paxton St

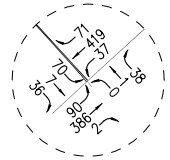

No. 3
I-5 Fwy SB
Ramps-Sharp Ave/
Paxton St

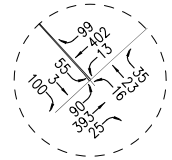

No. 4
I-5 Fwy NB
Ramps-Remick Ave/
Paxton St

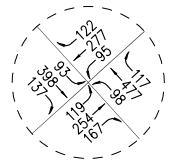

No. 5
Laurel Canyon Blvd/
Branford St

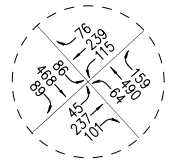

No. 6
San Fernando Rd/
Branford St

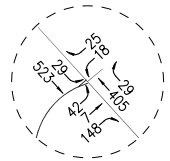

No. 7
Laurel Canyon
Blvd/I-5 Fwy NB
Off-Ramp-Jerome St

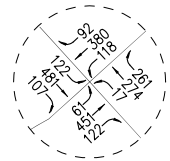

No. 8
Laurel Canyon Blvd/
Sheldon St

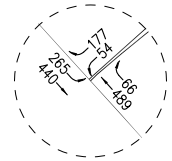

No. 9
Laurel Canyon Blvd/
I-5 Fwy SB Ramps

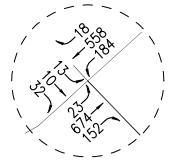

No. 10
I-5 Fwy NB
On-Ramp-Rincon
Ave/
Sheldon St

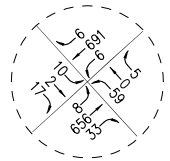

No. 11
Haddon Ave/
Sheldon St

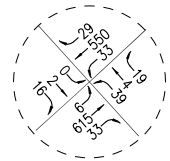
figure_text

No. 12
Telfair Ave/
Sheldon St

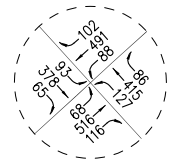

No. 13
San Fernando Rd/
Sheldon St

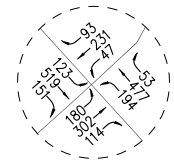

No. 14
Glenoaks Blvd/
Sheldon St

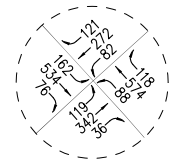

No. 15
Laurel Canyon Blvd/
Paxton St

No. 16
Haddon Ave/
Paxton St

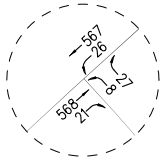

No. 17
Kewen Ave/
Paxton St

No. 18
Telfair Ave/
Paxton St

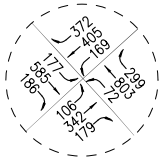

No. 19
San Fernando Rd/
Paxton St

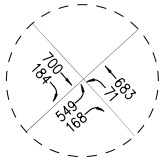

No. 20
San Fernando Rd/
SR-118 Fwy EB
Ramps

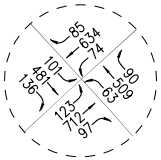

No. 21
San Fernando Rd/
Van Nuys Blvd

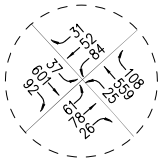

No. 22
San Fernando Rd/
Pierce St

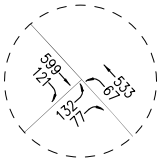

No. 23
San Fernando Rd/
Terra Bella St

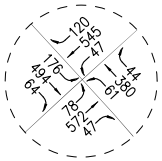

No. 24
San Fernando Rd/
Osborne St

N

NOT TO SCALE

APPENDIX FIGURE C3-3B

YEAR 2018 CUMULATIVE WITH PROJECT TRAFFIC VOLUMES

ALTERNATIVE ROUTE 3 - WEEDAY MID-DAY PEAK HOUR

PACOIMA SPREADING GROUNDS IMPROVEMENT PROJECT

LINSCOTT, LAW & GREENSPAN, engineers

o:\job_file\4056-2\dwg\opdx-c3-3b.dwg LDP 14:17:05 07/02/2015 rodriquez

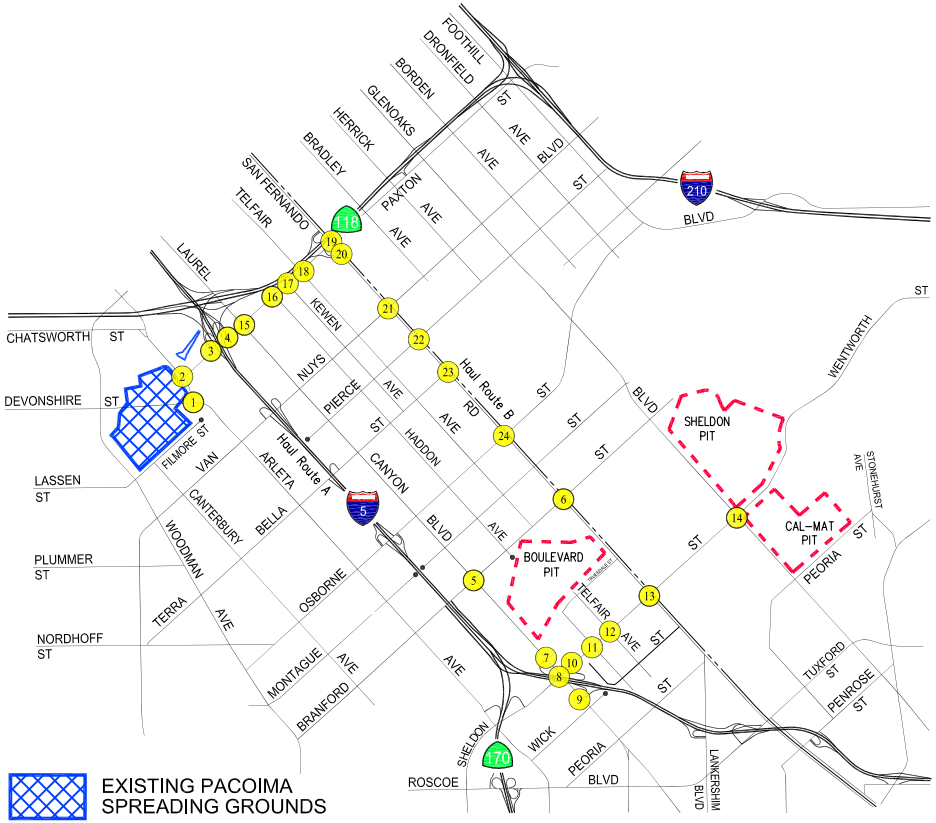

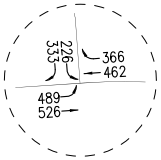

No. 1
Arleta Ave/
Devonshire St

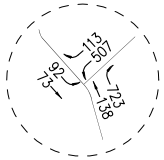

No. 2
Arleta Ave/
Paxton St

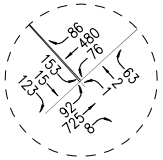

No. 3
I-5 Fwy SB
Ramps-Sharp Ave/
Paxton St

No. 4
I-5 Fwy NB
Ramps-Remick Ave/
Paxton St

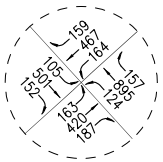

No. 5
Laurel Canyon Blvd/
Branford St

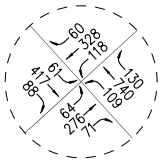

No. 6
San Fernando Rd/
Branford St

No. 7
Laurel Canyon
Blvd/I-5 Fwy NB
Off-Ramp-Jerome St

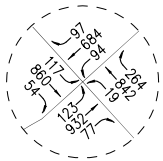

No. 8
Laurel Canyon Blvd/
Sheldon St

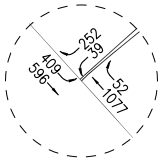

No. 9
Laurel Canyon Blvd/
I-5 Fwy SB Ramps

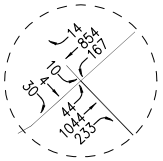

No. 10
I-5 Fwy NB
On-Ramp-Rincon
Ave/
Sheldon St

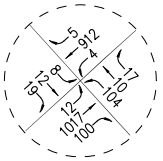

No. 11
Haddon Ave/
Sheldon St

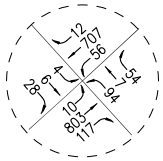

No. 12
Telfair Ave/
Sheldon St

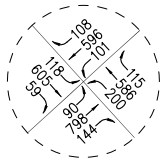

No. 13
San Fernando Rd/
Sheldon St

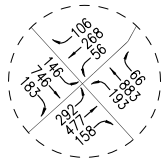

No. 14
Glenoaks Blvd/
Sheldon St

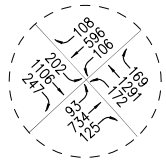

No. 15
Laurel Canyon Blvd/
Paxton St

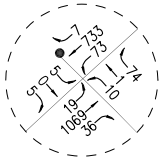

No. 16
Haddon Ave/
Paxton St

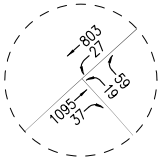

No. 17
Kewen Ave/
Paxton St

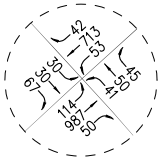

No. 18
Telfair Ave/
Paxton St

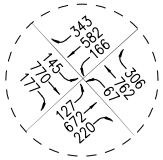

No. 19
San Fernando Rd/
Paxton St

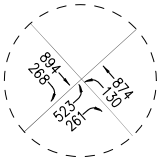

No. 20
San Fernando Rd/
SR-118 Fwy EB
Ramps

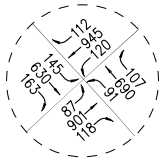

No. 21
San Fernando Rd/
Van Nuys Blvd

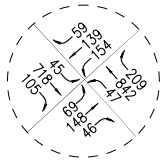

No. 22
San Fernando Rd/
Pierce St

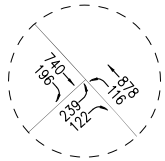

No. 23
San Fernando Rd/
Terra Bella St

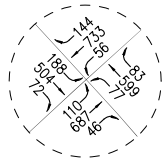

No. 24
San Fernando Rd/
Osborne St

N

NOT TO SCALE

APPENDIX FIGURE C3-3C

YEAR 2018 CUMULATIVE WITH PROJECT TRAFFIC VOLUMES

ALTERNATIVE ROUTE 3 - WEEDAY PM PEAK HOUR

PACOIMA SPREADING GROUNDS IMPROVEMENT PROJECT

LINSCOTT, LAW & GREENSPAN, engineers

o:\job_file\4056-2\dwg\opdx-c3-3c.dwg LDP 14:16:45 07/02/2015 rodriquez

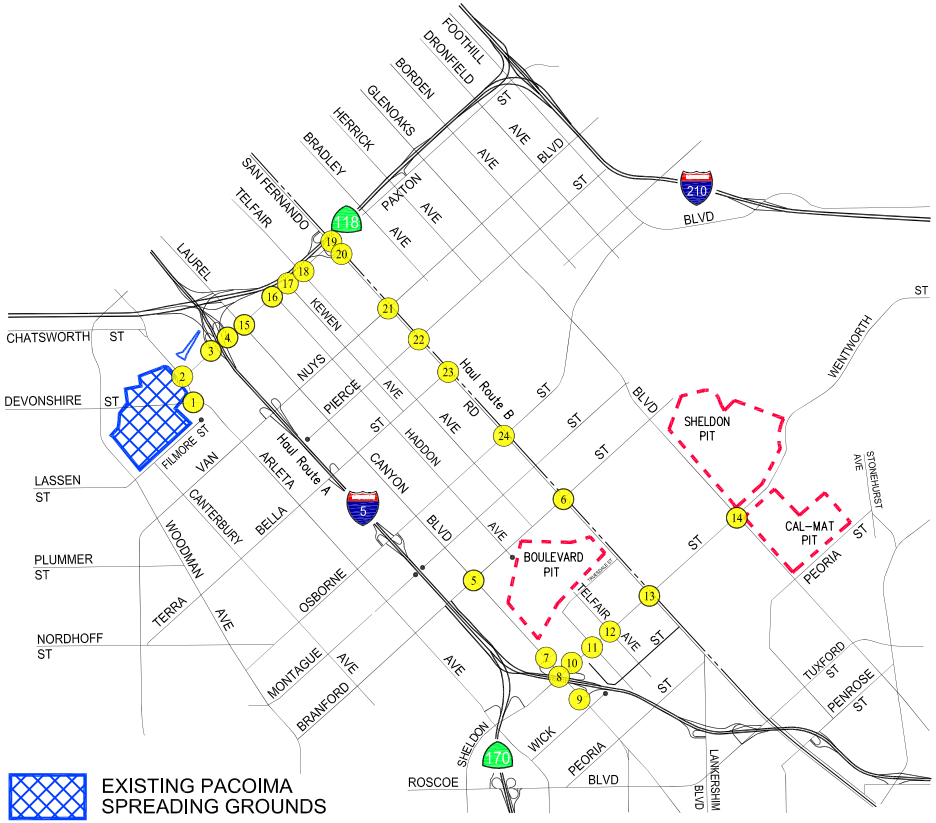

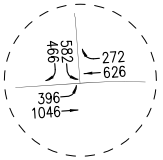

No. 1
Arleta Ave/
Devonshire St

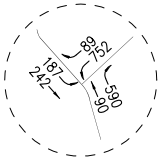

No. 2
Arleta Ave/
Paxton St

No. 3
I-5 Fwy SB
Ramps-Sharp Ave/
Paxton St

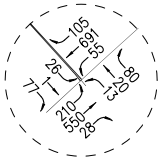

No. 4
I-5 Fwy NB
Ramps-Remick Ave/
Paxton St

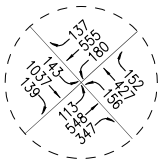

No. 5
Laurel Canyon Blvd/
Branford St

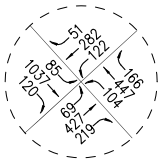

No. 6
San Fernando Rd/
Branford St

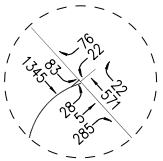

No. 7
Laurel Canyon
Blvd/I-5 Fwy NB
Off-Ramp-Jerome St

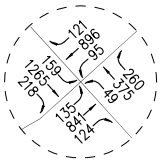

No. 8
Laurel Canyon Blvd/
Sheldon St

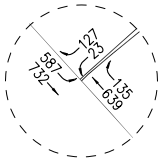

No. 9
Laurel Canyon Blvd/
I-5 Fwy SB Ramps

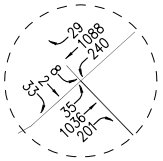

No. 10
I-5 Fwy NB
On-Ramp-Rincon
Ave/
Sheldon St

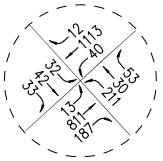

No. 11
Haddon Ave/
Sheldon St

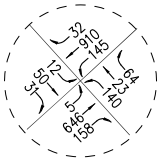

No. 12
Telfair Ave/
Sheldon St

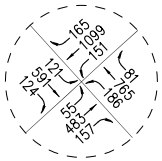

No. 13
San Fernando Rd/
Sheldon St

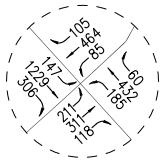

No. 14
Glenoaks Blvd/
Sheldon St

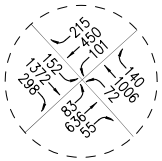

No. 15
Laurel Canyon Blvd/
Paxton St

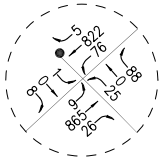

No. 16
Haddon Ave/
Paxton St

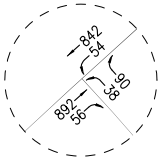

No. 17
Kewen Ave/
Paxton St

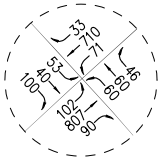

No. 18
Telfair Ave/
Paxton St

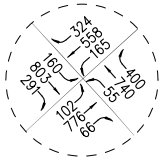

No. 19
San Fernando Rd/
Paxton St

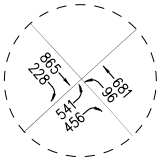

No. 20
San Fernando Rd/
SR-118 Fwy EB
Ramps

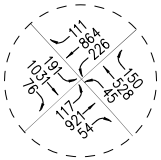

No. 21
San Fernando Rd/
Van Nuys Blvd

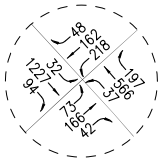

No. 22
San Fernando Rd/
Pierce St

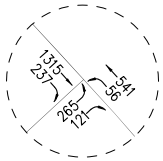

No. 23
San Fernando Rd/
Terra Bella St

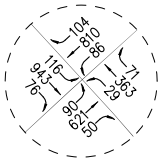

No. 24
San Fernando Rd/
Osborne St

NOT TO SCALE

APPENDIX FIGURE C3-4A

YEAR 2018 CUMULATIVE WITH PROJECT TRAFFIC VOLUMES

ALTERNATIVE ROUTE 4 - WEEDAY AM PEAK HOUR

PACOIMA SPREADING GROUNDS IMPROVEMENT PROJECT

LINSCOTT, LAW & GREENSPAN, engineers

o:\job_file\4056-2\dwg\opdx-c3-4a.dwg LDP 14:16:22 07/02/2015 rodriquez

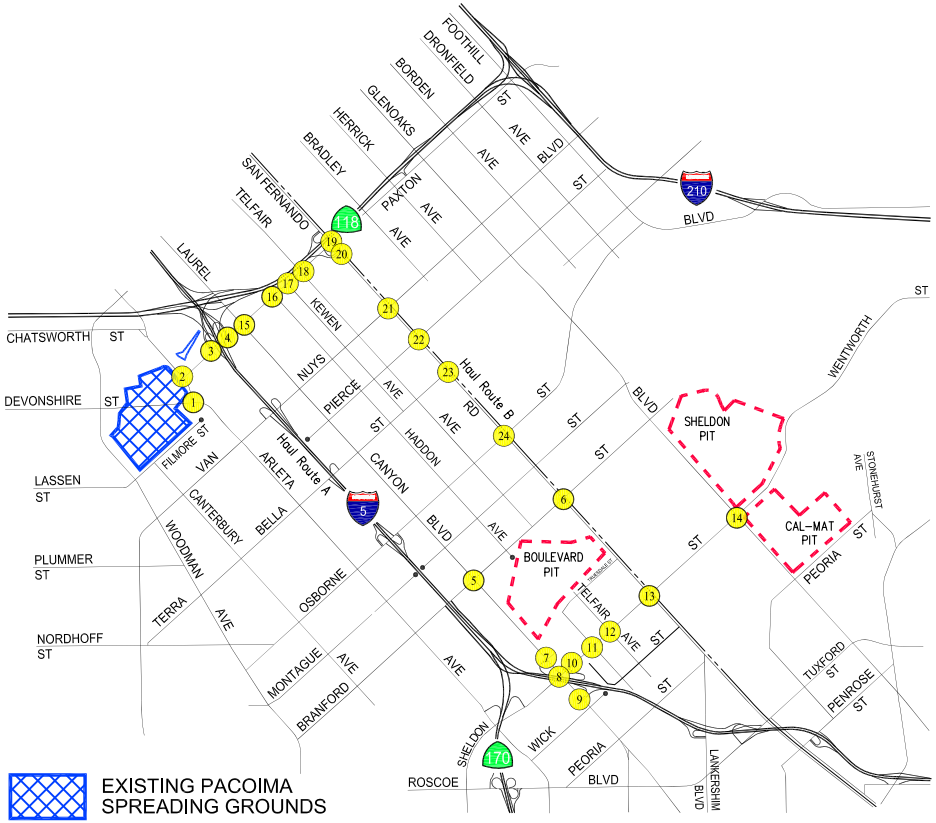

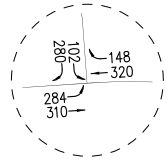

No. 1
Arleta Ave/
Devonshire St

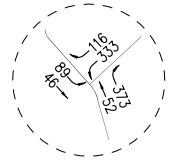

No. 2
Arleta Ave/
Paxton St

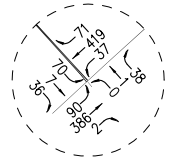

No. 3
I-5 Fwy SB
Ramps-Sharp Ave/
Paxton St

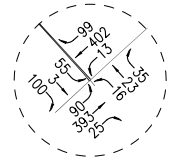

No. 4
I-5 Fwy NB
Ramps-Remick Ave/
Paxton St

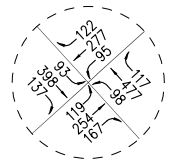

No. 5
Laurel Canyon Blvd/
Branford St

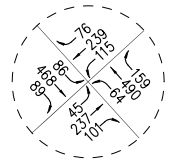

No. 6
San Fernando Rd/
Branford St

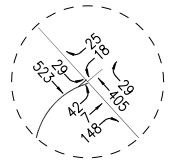

No. 7
Laurel Canyon
Blvd/I-5 Fwy NB
Off-Ramp-Jerome St

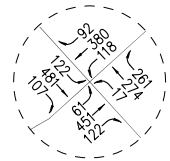

No. 8
Laurel Canyon Blvd/
Sheldon St

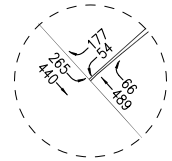

No. 9
Laurel Canyon Blvd/
I-5 Fwy SB Ramps

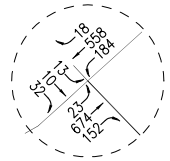

No. 10
I-5 Fwy NB
On-Ramp-Rincon
Ave/
Sheldon St

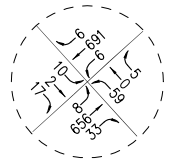

No. 11
Haddon Ave/
Sheldon St

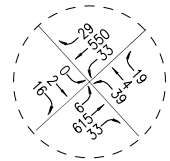

No. 12
Telfair Ave/
Sheldon St

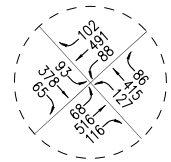

No. 13
San Fernando Rd/
Sheldon St

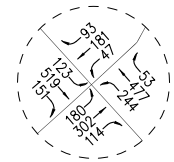

No. 14
Glenoaks Blvd/
Sheldon St

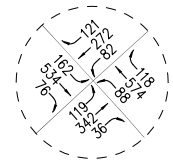

No. 15
Laurel Canyon Blvd/
Paxton St

No. 16
Haddon Ave/
Paxton St

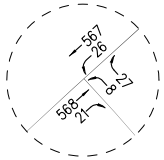

No. 17
Kewen Ave/
Paxton St

No. 18
Telfair Ave/
Paxton St

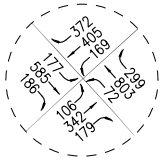

No. 19
San Fernando Rd/
Paxton St

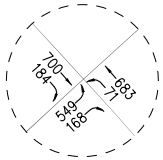

No. 20
San Fernando Rd/
SR-118 Fwy EB
Ramps

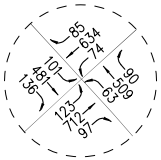

No. 21
San Fernando Rd/
Van Nuys Blvd

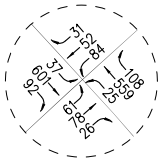

No. 22
San Fernando Rd/
Pierce St

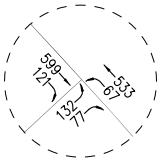

No. 23
San Fernando Rd/
Terra Bella St

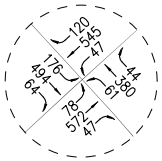

No. 24
San Fernando Rd/
Osborne St

N

NOT TO SCALE

APPENDIX FIGURE C3-4B

YEAR 2018 CUMULATIVE WITH PROJECT TRAFFIC VOLUMES

ALTERNATIVE ROUTE 4 - WEEDAY MID-DAY PEAK HOUR

PACOIMA SPREADING GROUNDS IMPROVEMENT PROJECT

LINSCOTT, LAW & GREENSPAN, engineers

o:\job_file\4056-2\dwg\opdx-c3-4b.dwg LDP 14:15:47 07/02/2015 rodriquez

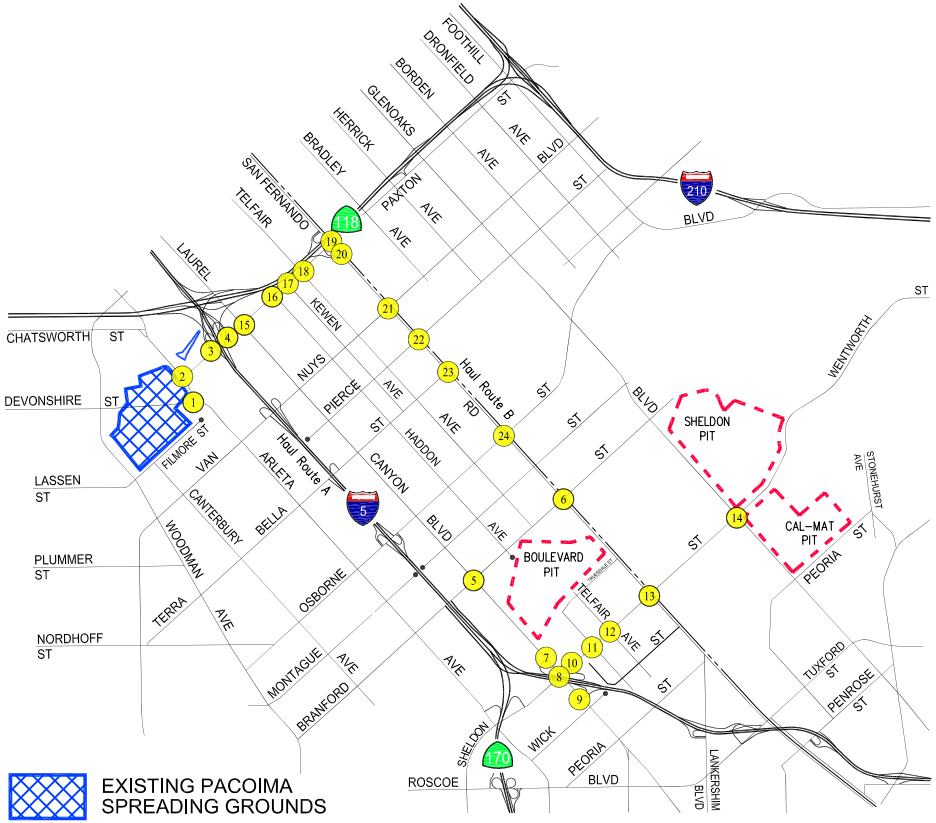

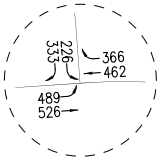

No. 1
Arleta Ave/
Devonshire St

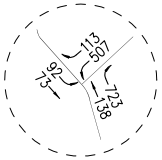

No. 2
Arleta Ave/
Paxton St

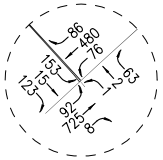

No. 3
I-5 Fwy SB
Ramps-Sharp Ave/
Paxton St

No. 4
I-5 Fwy NB
Ramps-Remick Ave/
Paxton St

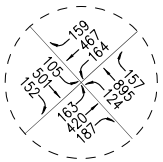

No. 5
Laurel Canyon Blvd/
Branford St

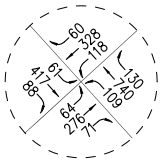

No. 6
San Fernando Rd/
Branford St

No. 7
Laurel Canyon
Blvd/I-5 Fwy NB
Off-Ramp-Jerome St

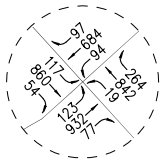

No. 8
Laurel Canyon Blvd/
Sheldon St

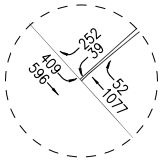

No. 9
Laurel Canyon Blvd/
I-5 Fwy SB Ramps

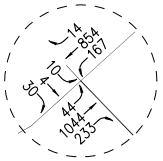

No. 10
I-5 Fwy NB
On-Ramp-Rincon
Ave/
Sheldon St

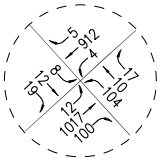

No. 11
Haddon Ave/
Sheldon St

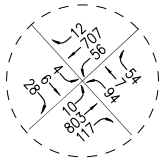

No. 12
Telfair Ave/
Sheldon St

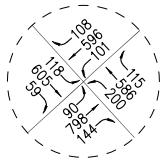

No. 13
San Fernando Rd/
Sheldon St

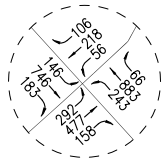

No. 14
Glenoaks Blvd/
Sheldon St

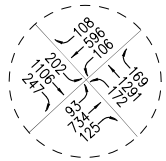

No. 15
Laurel Canyon Blvd/
Paxton St

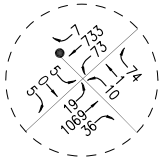

No. 16
Haddon Ave/
Paxton St

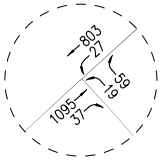

No. 17
Kewen Ave/
Paxton St

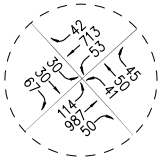

No. 18
Telfair Ave/
Paxton St

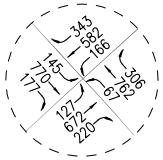

No. 19
San Fernando Rd/
Paxton St

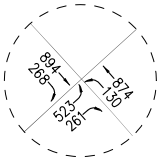

No. 20
San Fernando Rd/
SR-118 Fwy EB
Ramps

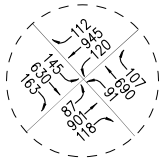

No. 21
San Fernando Rd/
Van Nuys Blvd

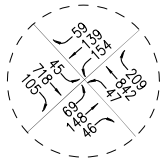

No. 22
San Fernando Rd/
Pierce St

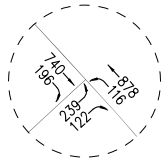

No. 23
San Fernando Rd/
Terra Bella St

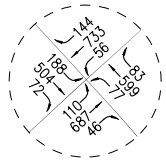

No. 24
San Fernando Rd/
Osborne St

N

NOT TO SCALE

APPENDIX FIGURE C3-4C

YEAR 2018 CUMULATIVE WITH PROJECT TRAFFIC VOLUMES

ALTERNATIVE ROUTE 4 - WEEDAY PM PEAK HOUR

PACOIMA SPREADING GROUNDS IMPROVEMENT PROJECT

LINSCOTT, LAW & GREENSPAN, engineers

o:\job_file\4056-2\dwg\opdx-c3-4c.dwg LDP 14:27:04 07/02/2015 rodriquez

APPENDIX D

HCM AND LEVELS OF SERVICE EXPLANATION

HCM UNSIGNALIZED INTERSECTION DATA WORKSHEETS
- WEEKDAY AM, MID-DAY AND PM PEAK HOURS

LEVEL OF SERVICE FOR UNSIGNALIZED INTERSECTIONS

In the *Highway Capacity Manual (HCM)*, published by the Transportation Research Board, 2000, level of service for unsignalized intersections is defined in terms of delay, which is a measure of driver discomfort, frustration, fuel consumption, and lost travel time. The delay experienced by a motorist is made up of a number of factors that relate to control, geometrics, traffic, and incidents. Total delay is the difference between the travel time actually experienced and the reference travel time that would result during base conditions, in the absence of incidents, control, traffic, or geometric delay. Only the portion of total delay attributed to the traffic control measures, either traffic signals or stop signs, is quantified. This delay is called *control delay*. Control delay includes initial deceleration delay, queue move-up time, stopped delay, and final acceleration delay.

Level of Service criteria for unsignalized intersections are stated in terms of the average control delay per vehicle. The level of service is determined by the computed or measured control delay and is defined for each minor movement. Average control delay for any particular minor movement is a function of the service time for the approach and the degree of utilization. (Level of service is not defined for the intersection as a whole for two-way stop controlled intersections.)

Level of Service Criteria for TWSC/AWSC Intersections

Level of Service	Average Control Delay (Sec/Veh)
A	≤ 10
B	> 10 and ≤ 15
C	> 15 and ≤ 25
D	> 25 and ≤ 35
E	> 35 and ≤ 50
F	> 50

Level of Service (LOS) values are used to describe intersection operations with service levels varying from LOS A (free flow) to LOS F (jammed condition). The following descriptions summarize *HCM* criteria for each level of service:

LOS A describes operations with very low control delay, up to 10 seconds per vehicle.

LOS B describes operations with control delay greater than 10 and up to 15 seconds per vehicle.

LOS C describes operations with control delay greater than 15 and up to 25 seconds per vehicle.

LOS D describes operations with control delay greater than 25 and up to 35 seconds per vehicle.

LOS E describes operations with control delay greater than 35 and up to 50 seconds per vehicle.

LOS F describes operations with control delay in excess of 50 seconds per vehicle. For two-way stop controlled intersections, LOS F exists when there are insufficient gaps of suitable size to allow side-street demand to safely cross through a major-street traffic stream. This level of service is generally evident from extremely long control delays experienced by side-street traffic and by queuing on the minor-street approaches.

TWO-WAY STOP CONTROL SUMMARY

General Information		Site Information	
Analyst	*ACY*	Intersection	*17*
Agency/Co.	*LLG Engineers*	Jurisdiction	*City of Los Angeles*
Date Performed	*4/28/2015*	Analysis Year	*Year 2015 Existing*
Analysis Time Period	*Weekday AM Peak Hour*		

Project Description *Pacoima Spreading Grounds Improvement Project (1-13-4056-2)*

East/West Street: *Paxton Street*	North/South Street: *Kewen Avenue*
Intersection Orientation: *East-West*	Study Period (hrs): *0.25*

Vehicle Volumes and Adjustments

Major Street	Eastbound			Westbound		
Movement	1	2	3	4	5	6
	L	T	R	L	T	R
Volume (veh/h)		*833*	*54*	*52*	*785*	
Peak-Hour Factor, PHF	*1.00*	*1.00*	*1.00*	*1.00*	*1.00*	*1.00*
Hourly Flow Rate, HFR (veh/h)	*0*	*833*	*54*	*52*	*785*	*0*
Percent Heavy Vehicles	*0*	--	--	*0*	--	--
Median Type	*Undivided*					
RT Channelized			*0*			*0*
Lanes	*0*	*2*	*0*	*1*	*2*	*0*
Configuration		*T*	*TR*	*L*	*T*	
Upstream Signal		*0*			*0*	

Minor Street	Northbound			Southbound		
Movement	7	8	9	10	11	12
	L	T	R	L	T	R
Volume (veh/h)	*36*		*86*			
Peak-Hour Factor, PHF	*1.00*	*1.00*	*1.00*	*1.00*	*1.00*	*1.00*
Hourly Flow Rate, HFR (veh/h)	*36*	*0*	*86*	*0*	*0*	*0*
Percent Heavy Vehicles	*0*	*0*	*0*	*0*	*0*	*0*
Percent Grade (%)		*0*			*0*	
Flared Approach		*N*			*N*	
Storage		*0*			*0*	
RT Channelized			*0*			*0*
Lanes	*0*	*0*	*0*	*0*	*0*	*0*
Configuration		*LR*				

Delay, Queue Length, and Level of Service

Approach	Eastbound	Westbound	Northbound			Southbound		
Movement	1	4	7	8	9	10	11	12
Lane Configuration		*L*		*LR*				
v (veh/h)		*52*		*122*				
C (m) (veh/h)		*726*		*274*				
v/c		*0.07*		*0.45*				
95% queue length		*0.23*		*2.16*				
Control Delay (s/veh)		*10.3*		*28.3*				
LOS		*B*		*D*				
Approach Delay (s/veh)	--	--	*28.3*					
Approach LOS	--	--	*D*					

Copyright © 2010 University of Florida, All Rights Reserved

TWO-WAY STOP CONTROL SUMMARY

General Information		Site Information	
Analyst	*ACY*	Intersection	*17*
Agency/Co.	*LLG Engineers*	Jurisdiction	*City of Los Angeles*
Date Performed	*4/28/2015*	Analysis Year	*Year 2015 Existing*
Analysis Time Period	*Weekday Mid-day Peak Hour*		

Project Description *Pacoima Spreading Grounds Improvement Project (1-13-4056-2)*

East/West Street: *Paxton Street* | North/South Street: *Kewen Avenue*

Intersection Orientation: *East-West* | Study Period (hrs): *0.25*

Vehicle Volumes and Adjustments

Major Street	Eastbound			Westbound		
Movement	1	2	3	4	5	6
	L	T	R	L	T	R
Volume (veh/h)		*523*	*20*	*25*	*522*	
Peak-Hour Factor, PHF	*1.00*	*1.00*	*1.00*	*1.00*	*1.00*	*1.00*
Hourly Flow Rate, HFR (veh/h)	*0*	*523*	*20*	*25*	*522*	*0*
Percent Heavy Vehicles	*0*	--	--	*0*	--	--
Median Type	*Undivided*					
RT Channelized			*0*			*0*
Lanes	*0*	*2*	*0*	*1*	*2*	*0*
Configuration		*T*	*TR*	*L*	*T*	
Upstream Signal		*0*			*0*	

Minor Street	Northbound			Southbound		
Movement	7	8	9	10	11	12
	L	T	R	L	T	R
Volume (veh/h)	*8*		*26*			
Peak-Hour Factor, PHF	*1.00*	*1.00*	*1.00*	*1.00*	*1.00*	*1.00*
Hourly Flow Rate, HFR (veh/h)	*8*	*0*	*26*	*0*	*0*	*0*
Percent Heavy Vehicles	*0*	*0*	*0*	*0*	*0*	*0*
Percent Grade (%)		*0*			*0*	
Flared Approach		*N*			*N*	
Storage		*0*			*0*	
RT Channelized			*0*			*0*
Lanes	*0*	*0*	*0*	*0*	*0*	*0*
Configuration		*LR*				

Delay, Queue Length, and Level of Service

Approach	Eastbound	Westbound	Northbound			Southbound		
Movement	1	4	7	8	9	10	11	12
Lane Configuration		*L*		*LR*				
v (veh/h)		*25*		*34*				
C (m) (veh/h)		*1017*		*550*				
v/c		*0.02*		*0.06*				
95% queue length		*0.08*		*0.20*				
Control Delay (s/veh)		*8.6*		*12.0*				
LOS		*A*		*B*				
Approach Delay (s/veh)	--	--	*12.0*					
Approach LOS	--	--	*B*					

Copyright © 2010 University of Florida, All Rights Reserved

TWO-WAY STOP CONTROL SUMMARY

General Information		Site Information	
Analyst	*ACY*	Intersection	*17*
Agency/Co.	*LLG Engineers*	Jurisdiction	*City of Los Angeles*
Date Performed	*4/28/2015*	Analysis Year	*Year 2015 Existing*
Analysis Time Period	*Weekday PM Peak Hour*		

Project Description *Pacoima Spreading Grounds Improvement Project (1-13-4056-2)*

East/West Street: *Paxton Street* | North/South Street: *Kewen Avenue*

Intersection Orientation: *East-West* | Study Period (hrs): *0.25*

Vehicle Volumes and Adjustments

Major Street	Eastbound			Westbound		
Movement	1	2	3	4	5	6
	L	T	R	L	T	R
Volume (veh/h)		*1027*	*35*	*26*	*748*	
Peak-Hour Factor, PHF	*1.00*	*1.00*	*1.00*	*1.00*	*1.00*	*1.00*
Hourly Flow Rate, HFR (veh/h)	*0*	*1027*	*35*	*26*	*748*	*0*
Percent Heavy Vehicles	*0*	--	--	*0*	--	--
Median Type	*Undivided*					
RT Channelized			*0*			*0*
Lanes	*0*	*2*	*0*	*1*	*2*	*0*
Configuration		*T*	*TR*	*L*	*T*	
Upstream Signal		*0*			*0*	

Minor Street	Northbound			Southbound		
Movement	7	8	9	10	11	12
	L	T	R	L	T	R
Volume (veh/h)	*18*		*56*			
Peak-Hour Factor, PHF	*1.00*	*1.00*	*1.00*	*1.00*	*1.00*	*1.00*
Hourly Flow Rate, HFR (veh/h)	*18*	*0*	*56*	*0*	*0*	*0*
Percent Heavy Vehicles	*0*	*0*	*0*	*0*	*0*	*0*
Percent Grade (%)		*0*			*0*	
Flared Approach		*N*			*N*	
Storage		*0*			*0*	
RT Channelized			*0*			*0*
Lanes	*0*	*0*	*0*	*0*	*0*	*0*
Configuration		*LR*				

Delay, Queue Length, and Level of Service

Approach	Eastbound	Westbound	Northbound			Southbound		
Movement	1	4	7	8	9	10	11	12
Lane Configuration		*L*		*LR*				
v (veh/h)		*26*		*74*				
C (m) (veh/h)		*639*		*272*				
v/c		*0.04*		*0.27*				
95% queue length		*0.13*		*1.07*				
Control Delay (s/veh)		*10.9*		*23.1*				
LOS		*B*		*C*				
Approach Delay (s/veh)	--	--	*23.1*					
Approach LOS	--	--	*C*					

Copyright © 2010 University of Florida, All Rights Reserved

TWO-WAY STOP CONTROL SUMMARY

General Information		Site Information	
Analyst	*ACY*	Intersection	*17*
Agency/Co.	*LLG Engineers*	Jurisdiction	*City of Los Angeles*
Date Performed	*4/28/2015*	Analysis Year	*Year 2015 Existing w/ Project*
Analysis Time Period	*Weekday AM Peak Hour*		

Project Description *Pacoima Spreading Grounds Improvement Project (1-13-4056-2)*

East/West Street: *Paxton Street* | North/South Street: *Kewen Avenue*

Intersection Orientation: *East-West* | Study Period (hrs): *0.25*

Vehicle Volumes and Adjustments

Major Street	Eastbound			Westbound		
Movement	1	2	3	4	5	6
	L	T	R	L	T	R
Volume (veh/h)		*853*	*54*	*52*	*805*	
Peak-Hour Factor, PHF	*1.00*	*1.00*	*1.00*	*1.00*	*1.00*	*1.00*
Hourly Flow Rate, HFR (veh/h)	*0*	*853*	*54*	*52*	*805*	*0*
Percent Heavy Vehicles	*0*	--	--	*0*	--	--
Median Type	*Undivided*					
RT Channelized			*0*			*0*
Lanes	*0*	*2*	*0*	*1*	*2*	*0*
Configuration		*T*	*TR*	*L*	*T*	
Upstream Signal		*0*			*0*	

Minor Street	Northbound			Southbound		
Movement	7	8	9	10	11	12
	L	T	R	L	T	R
Volume (veh/h)	*36*		*86*			
Peak-Hour Factor, PHF	*1.00*	*1.00*	*1.00*	*1.00*	*1.00*	*1.00*
Hourly Flow Rate, HFR (veh/h)	*36*	*0*	*86*	*0*	*0*	*0*
Percent Heavy Vehicles	*0*	*0*	*0*	*0*	*0*	*0*
Percent Grade (%)		*0*			*0*	
Flared Approach		*N*			*N*	
Storage		*0*			*0*	
RT Channelized			*0*			*0*
Lanes	*0*	*0*	*0*	*0*	*0*	*0*
Configuration		*LR*				

Delay, Queue Length, and Level of Service

Approach	Eastbound	Westbound	Northbound			Southbound		
Movement	1	4	7	8	9	10	11	12
Lane Configuration		*L*		*LR*				
v (veh/h)		*52*		*122*				
C (m) (veh/h)		*714*		*266*				
v/c		*0.07*		*0.46*				
95% queue length		*0.23*		*2.26*				
Control Delay (s/veh)		*10.4*		*29.5*				
LOS		*B*		*D*				
Approach Delay (s/veh)	--	--	*29.5*					
Approach LOS	--	--	*D*					

Copyright © 2010 University of Florida, All Rights Reserved

TWO-WAY STOP CONTROL SUMMARY

General Information		Site Information	
Analyst	*ACY*	Intersection	*17*
Agency/Co.	*LLG Engineers*	Jurisdiction	*City of Los Angeles*
Date Performed	*4/28/2015*	Analysis Year	*Year 2015 Existing w/ Project*
Analysis Time Period	*Weekday Mid-day Peak Hour*		

Project Description *Pacoima Spreading Grounds Improvement Project (1-13-4056-2)*

East/West Street: *Paxton Street*	North/South Street: *Kewen Avenue*
Intersection Orientation: *East-West*	Study Period (hrs): *0.25*

Vehicle Volumes and Adjustments

Major Street	Eastbound			Westbound		
Movement	1	2	3	4	5	6
	L	T	R	L	T	R
Volume (veh/h)		*543*	*20*	*25*	*542*	
Peak-Hour Factor, PHF	*1.00*	*1.00*	*1.00*	*1.00*	*1.00*	*1.00*
Hourly Flow Rate, HFR (veh/h)	*0*	*543*	*20*	*25*	*542*	*0*
Percent Heavy Vehicles	*0*	--	--	*0*	--	--
Median Type	*Undivided*					
RT Channelized			*0*			*0*
Lanes	*0*	*2*	*0*	*1*	*2*	*0*
Configuration		*T*	*TR*	*L*	*T*	
Upstream Signal		*0*			*0*	

Minor Street	Northbound			Southbound		
Movement	7	8	9	10	11	12
	L	T	R	L	T	R
Volume (veh/h)	*8*		*26*			
Peak-Hour Factor, PHF	*1.00*	*1.00*	*1.00*	*1.00*	*1.00*	*1.00*
Hourly Flow Rate, HFR (veh/h)	*8*	*0*	*26*	*0*	*0*	*0*
Percent Heavy Vehicles	*0*	*0*	*0*	*0*	*0*	*0*
Percent Grade (%)		*0*			*0*	
Flared Approach		*N*			*N*	
Storage		*0*			*0*	
RT Channelized			*0*			*0*
Lanes	*0*	*0*	*0*	*0*	*0*	*0*
Configuration		*LR*				

Delay, Queue Length, and Level of Service

Approach	Eastbound	Westbound	Northbound			Southbound		
Movement	1	4	7	8	9	10	11	12
Lane Configuration		*L*		*LR*				
v (veh/h)		*25*		*34*				
C (m) (veh/h)		*1000*		*535*				
v/c		*0.03*		*0.06*				
95% queue length		*0.08*		*0.20*				
Control Delay (s/veh)		*8.7*		*12.2*				
LOS		*A*		*B*				
Approach Delay (s/veh)	--	--	*12.2*					
Approach LOS	--	--	*B*					

Copyright © 2010 University of Florida, All Rights Reserved

TWO-WAY STOP CONTROL SUMMARY

General Information		Site Information	
Analyst	*ACY*	Intersection	*17*
Agency/Co.	*LLG Engineers*	Jurisdiction	*City of Los Angeles*
Date Performed	*4/28/2015*	Analysis Year	*Year 2015 Existing w/ Project*
Analysis Time Period	*Weekday PM Peak Hour*		

Project Description *Pacoima Spreading Grounds Improvement Project (1-13-4056-2)*

East/West Street: *Paxton Street* | North/South Street: *Kewen Avenue*

Intersection Orientation: *East-West* | Study Period (hrs): *0.25*

Vehicle Volumes and Adjustments

Major Street	Eastbound			Westbound		
Movement	1	2	3	4	5	6
	L	T	R	L	T	R
Volume (veh/h)		*1047*	*35*	*26*	*768*	
Peak-Hour Factor, PHF	*1.00*	*1.00*	*1.00*	*1.00*	*1.00*	*1.00*
Hourly Flow Rate, HFR (veh/h)	*0*	*1047*	*35*	*26*	*768*	*0*
Percent Heavy Vehicles	*0*	--	--	*0*	--	--
Median Type	*Undivided*					
RT Channelized			*0*			*0*
Lanes	*0*	*2*	*0*	*1*	*2*	*0*
Configuration		*T*	*TR*	*L*	*T*	
Upstream Signal		*0*			*0*	

Minor Street	Northbound			Southbound		
Movement	7	8	9	10	11	12
	L	T	R	L	T	R
Volume (veh/h)	*18*		*56*			
Peak-Hour Factor, PHF	*1.00*	*1.00*	*1.00*	*1.00*	*1.00*	*1.00*
Hourly Flow Rate, HFR (veh/h)	*18*	*0*	*56*	*0*	*0*	*0*
Percent Heavy Vehicles	*0*	*0*	*0*	*0*	*0*	*0*
Percent Grade (%)		*0*			*0*	
Flared Approach		*N*			*N*	
Storage		*0*			*0*	
RT Channelized			*0*			*0*
Lanes	*0*	*0*	*0*	*0*	*0*	*0*
Configuration		*LR*				

Delay, Queue Length, and Level of Service

Approach	Eastbound	Westbound	Northbound			Southbound		
Movement	1	4	7	8	9	10	11	12
Lane Configuration		*L*		*LR*				
v (veh/h)		*26*		*74*				
C (m) (veh/h)		*627*		*263*				
v/c		*0.04*		*0.28*				
95% queue length		*0.13*		*1.12*				
Control Delay (s/veh)		*11.0*		*24.0*				
LOS		*B*		*C*				
Approach Delay (s/veh)	--	--	*24.0*					
Approach LOS	--	--	*C*					

Copyright © 2010 University of Florida, All Rights Reserved

TWO-WAY STOP CONTROL SUMMARY

General Information		Site Information	
Analyst	*ACY*	Intersection	*17*
Agency/Co.	*LLG Engineers*	Jurisdiction	*City of Los Angeles*
Date Performed	*4/28/2015*	Analysis Year	*Year 2018 Without Project*
Analysis Time Period	*Weekday AM Peak Hour*		

Project Description *Pacoima Spreading Grounds Improvement Project (1-13-4056-2)*

East/West Street: *Paxton Street*	North/South Street: *Kewen Avenue*
Intersection Orientation: *East-West*	Study Period (hrs): *0.25*

Vehicle Volumes and Adjustments

Major Street	Eastbound			Westbound		
Movement	1	2	3	4	5	6
	L	T	R	L	T	R
Volume (veh/h)		*872*	*56*	*54*	*822*	
Peak-Hour Factor, PHF	*1.00*	*1.00*	*1.00*	*1.00*	*1.00*	*1.00*
Hourly Flow Rate, HFR (veh/h)	*0*	*872*	*56*	*54*	*822*	*0*
Percent Heavy Vehicles	*0*	--	--	*0*	--	--
Median Type	*Undivided*					
RT Channelized			*0*			*0*
Lanes	*0*	*2*	*0*	*1*	*2*	*0*
Configuration		*T*	*TR*	*L*	*T*	
Upstream Signal		*0*			*0*	

Minor Street	Northbound			Southbound		
Movement	7	8	9	10	11	12
	L	T	R	L	T	R
Volume (veh/h)	*38*		*90*			
Peak-Hour Factor, PHF	*1.00*	*1.00*	*1.00*	*1.00*	*1.00*	*1.00*
Hourly Flow Rate, HFR (veh/h)	*38*	*0*	*90*	*0*	*0*	*0*
Percent Heavy Vehicles	*0*	*0*	*0*	*0*	*0*	*0*
Percent Grade (%)		*0*			*0*	
Flared Approach		*N*			*N*	
Storage		*0*			*0*	
RT Channelized			*0*			*0*
Lanes	*0*	*0*	*0*	*0*	*0*	*0*
Configuration		*LR*				

Delay, Queue Length, and Level of Service

Approach	Eastbound	Westbound	Northbound			Southbound		
Movement	1	4	7	8	9	10	11	12
Lane Configuration		*L*		*LR*				
v (veh/h)		*54*		*128*				
C (m) (veh/h)		*701*		*254*				
v/c		*0.08*		*0.50*				
95% queue length		*0.25*		*2.61*				
Control Delay (s/veh)		*10.6*		*32.7*				
LOS		*B*		*D*				
Approach Delay (s/veh)	--	--	*32.7*					
Approach LOS	--	--	*D*					

Copyright © 2010 University of Florida, All Rights Reserved

TWO-WAY STOP CONTROL SUMMARY

General Information		Site Information	
Analyst	*ACY*	Intersection	*17*
Agency/Co.	*LLG Engineers*	Jurisdiction	*City of Los Angeles*
Date Performed	*4/28/2015*	Analysis Year	*Year 2018 Without Project*
Analysis Time Period	*Weekday Mid-day Peak Hour*		

Project Description *Pacoima Spreading Grounds Improvement Project (1-13-4056-2)*

East/West Street: *Paxton Street*	North/South Street: *Kewen Avenue*
Intersection Orientation: *East-West*	Study Period (hrs): *0.25*

Vehicle Volumes and Adjustments

Major Street	Eastbound			Westbound		
Movement	1	2	3	4	5	6
	L	T	R	L	T	R
Volume (veh/h)		*548*	*21*	*26*	*547*	
Peak-Hour Factor, PHF	*1.00*	*1.00*	*1.00*	*1.00*	*1.00*	*1.00*
Hourly Flow Rate, HFR (veh/h)	*0*	*548*	*21*	*26*	*547*	*0*
Percent Heavy Vehicles	*0*	--	--	*0*	--	--
Median Type	*Undivided*					
RT Channelized			*0*			*0*
Lanes	*0*	*2*	*0*	*1*	*2*	*0*
Configuration		*T*	*TR*	*L*	*T*	
Upstream Signal		*0*			*0*	

Minor Street	Northbound			Southbound		
Movement	7	8	9	10	11	12
	L	T	R	L	T	R
Volume (veh/h)	*8*		*27*			
Peak-Hour Factor, PHF	*1.00*	*1.00*	*1.00*	*1.00*	*1.00*	*1.00*
Hourly Flow Rate, HFR (veh/h)	*8*	*0*	*27*	*0*	*0*	*0*
Percent Heavy Vehicles	*0*	*0*	*0*	*0*	*0*	*0*
Percent Grade (%)	*0*			*0*		
Flared Approach		*N*			*N*	
Storage		*0*			*0*	
RT Channelized			*0*			*0*
Lanes	*0*	*0*	*0*	*0*	*0*	*0*
Configuration		*LR*				

Delay, Queue Length, and Level of Service

Approach	Eastbound	Westbound	Northbound			Southbound		
Movement	1	4	7	8	9	10	11	12
Lane Configuration		*L*		*LR*				
v (veh/h)		*26*		*35*				
C (m) (veh/h)		*995*		*535*				
v/c		*0.03*		*0.07*				
95% queue length		*0.08*		*0.21*				
Control Delay (s/veh)		*8.7*		*12.2*				
LOS		*A*		*B*				
Approach Delay (s/veh)	--	--	*12.2*					
Approach LOS	--	--	*B*					

Copyright © 2010 University of Florida, All Rights Reserved

TWO-WAY STOP CONTROL SUMMARY

General Information		Site Information	
Analyst	*ACY*	Intersection	*17*
Agency/Co.	*LLG Engineers*	Jurisdiction	*City of Los Angeles*
Date Performed	*4/28/2015*	Analysis Year	*Year 2018 Without Project*
Analysis Time Period	*Weekday PM Peak Hour*		

Project Description *Pacoima Spreading Grounds Improvement Project (1-13-4056-2)*

East/West Street: *Paxton Street*	North/South Street: *Kewen Avenue*
Intersection Orientation: *East-West*	Study Period (hrs): *0.25*

Vehicle Volumes and Adjustments

Major Street	Eastbound			Westbound		
Movement	1	2	3	4	5	6
	L	T	R	L	T	R
Volume (veh/h)		*1075*	*37*	*27*	*783*	
Peak-Hour Factor, PHF	*1.00*	*1.00*	*1.00*	*1.00*	*1.00*	*1.00*
Hourly Flow Rate, HFR (veh/h)	*0*	*1075*	*37*	*27*	*783*	*0*
Percent Heavy Vehicles	*0*	--	--	*0*	--	--
Median Type	*Undivided*					
RT Channelized			*0*			*0*
Lanes	*0*	*2*	*0*	*1*	*2*	*0*
Configuration		*T*	*TR*	*L*	*T*	
Upstream Signal		*0*			*0*	

Minor Street	Northbound			Southbound		
Movement	7	8	9	10	11	12
	L	T	R	L	T	R
Volume (veh/h)	*19*		*59*			
Peak-Hour Factor, PHF	*1.00*	*1.00*	*1.00*	*1.00*	*1.00*	*1.00*
Hourly Flow Rate, HFR (veh/h)	*19*	*0*	*59*	*0*	*0*	*0*
Percent Heavy Vehicles	*0*	*0*	*0*	*0*	*0*	*0*
Percent Grade (%)		*0*			*0*	
Flared Approach		*N*			*N*	
Storage		*0*			*0*	
RT Channelized			*0*			*0*
Lanes	*0*	*0*	*0*	*0*	*0*	*0*
Configuration		*LR*				

Delay, Queue Length, and Level of Service

Approach	Eastbound	Westbound	Northbound			Southbound		
Movement	1	4	7	8	9	10	11	12
Lane Configuration		*L*		*LR*				
v (veh/h)		*27*		*78*				
C (m) (veh/h)		*612*		*252*				
v/c		*0.04*		*0.31*				
95% queue length		*0.14*		*1.27*				
Control Delay (s/veh)		*11.2*		*25.6*				
LOS		*B*		*D*				
Approach Delay (s/veh)	--	--	*25.6*					
Approach LOS	--	--	*D*					

Copyright © 2010 University of Florida, All Rights Reserved

TWO-WAY STOP CONTROL SUMMARY

General Information		Site Information	
Analyst	*ACY*	Intersection	*17*
Agency/Co.	*LLG Engineers*	Jurisdiction	*City of Los Angeles*
Date Performed	*4/28/2015*	Analysis Year	*Year 2018 With Project*
Analysis Time Period	*Weekday AM Peak Hour*		

Project Description *Pacoima Spreading Grounds Improvement Project (1-13-4056-2)*

East/West Street: *Paxton Street*	North/South Street: *Kewen Avenue*
Intersection Orientation: *East-West*	Study Period (hrs): *0.25*

Vehicle Volumes and Adjustments

Major Street	Eastbound			Westbound		
Movement	1	2	3	4	5	6
	L	T	R	L	T	R
Volume (veh/h)		*892*	*56*	*54*	*842*	
Peak-Hour Factor, PHF	*1.00*	*1.00*	*1.00*	*1.00*	*1.00*	*1.00*
Hourly Flow Rate, HFR (veh/h)	*0*	*892*	*56*	*54*	*842*	*0*
Percent Heavy Vehicles	*0*	--	--	*0*	--	--
Median Type	*Undivided*					
RT Channelized			*0*			*0*
Lanes	*0*	*2*	*0*	*1*	*2*	*0*
Configuration		*T*	*TR*	*L*	*T*	
Upstream Signal		*0*			*0*	

Minor Street	Northbound			Southbound		
Movement	7	8	9	10	11	12
	L	T	R	L	T	R
Volume (veh/h)	*38*		*90*			
Peak-Hour Factor, PHF	*1.00*	*1.00*	*1.00*	*1.00*	*1.00*	*1.00*
Hourly Flow Rate, HFR (veh/h)	*38*	*0*	*90*	*0*	*0*	*0*
Percent Heavy Vehicles	*0*	*0*	*0*	*0*	*0*	*0*
Percent Grade (%)		*0*			*0*	
Flared Approach		*N*			*N*	
Storage		*0*			*0*	
RT Channelized			*0*			*0*
Lanes	*0*	*0*	*0*	*0*	*0*	*0*
Configuration		*LR*				

Delay, Queue Length, and Level of Service

Approach	Eastbound	Westbound	Northbound			Southbound		
Movement	1	4	7	8	9	10	11	12
Lane Configuration		*L*		*LR*				
v (veh/h)		*54*		*128*				
C (m) (veh/h)		*690*		*244*				
v/c		*0.08*		*0.52*				
95% queue length		*0.25*		*2.78*				
Control Delay (s/veh)		*10.7*		*35.0*				
LOS		*B*		*D*				
Approach Delay (s/veh)	--	--	*35.0*					
Approach LOS	--	--	*D*					

Copyright © 2010 University of Florida, All Rights Reserved

TWO-WAY STOP CONTROL SUMMARY

General Information		Site Information	
Analyst	*ACY*	Intersection	*17*
Agency/Co.	*LLG Engineers*	Jurisdiction	*City of Los Angeles*
Date Performed	*4/28/2015*	Analysis Year	*Year 2018 With Project*
Analysis Time Period	*Weekday Mid-day Peak Hour*		

Project Description *Pacoima Spreading Grounds Improvement Project (1-13-4056-2)*

East/West Street: *Paxton Street*	North/South Street: *Kewen Avenue*
Intersection Orientation: *East-West*	Study Period (hrs): *0.25*

Vehicle Volumes and Adjustments

Major Street	Eastbound			Westbound		
Movement	1	2	3	4	5	6
	L	T	R	L	T	R
Volume (veh/h)		*568*	*21*	*26*	*567*	
Peak-Hour Factor, PHF	*1.00*	*1.00*	*1.00*	*1.00*	*1.00*	*1.00*
Hourly Flow Rate, HFR (veh/h)	*0*	*568*	*21*	*26*	*567*	*0*
Percent Heavy Vehicles	*0*	--	--	*0*	--	--
Median Type	*Undivided*					
RT Channelized			*0*			*0*
Lanes	*0*	*2*	*0*	*1*	*2*	*0*
Configuration		*T*	*TR*	*L*	*T*	
Upstream Signal		*0*			*0*	

Minor Street	Northbound			Southbound		
Movement	7	8	9	10	11	12
	L	T	R	L	T	R
Volume (veh/h)	*8*		*27*			
Peak-Hour Factor, PHF	*1.00*	*1.00*	*1.00*	*1.00*	*1.00*	*1.00*
Hourly Flow Rate, HFR (veh/h)	*8*	*0*	*27*	*0*	*0*	*0*
Percent Heavy Vehicles	*0*	*0*	*0*	*0*	*0*	*0*
Percent Grade (%)	*0*			*0*		
Flared Approach		*N*			*N*	
Storage		*0*			*0*	
RT Channelized			*0*			*0*
Lanes	*0*	*0*	*0*	*0*	*0*	*0*
Configuration		*LR*				

Delay, Queue Length, and Level of Service

Approach	Eastbound	Westbound	Northbound			Southbound		
Movement	1	4	7	8	9	10	11	12
Lane Configuration		*L*		*LR*				
v (veh/h)		*26*		*35*				
C (m) (veh/h)		*979*		*520*				
v/c		*0.03*		*0.07*				
95% queue length		*0.08*		*0.22*				
Control Delay (s/veh)		*8.8*		*12.4*				
LOS		*A*		*B*				
Approach Delay (s/veh)	--	--	*12.4*					
Approach LOS	--	--	*B*					

Copyright © 2010 University of Florida, All Rights Reserved

TWO-WAY STOP CONTROL SUMMARY

General Information		Site Information	
Analyst	*ACY*	Intersection	*17*
Agency/Co.	*LLG Engineers*	Jurisdiction	*City of Los Angeles*
Date Performed	*4/28/2015*	Analysis Year	*Year 2018 With Project*
Analysis Time Period	*Weekday PM Peak Hour*		

Project Description *Pacoima Spreading Grounds Improvement Project (1-13-4056-2)*

East/West Street: *Paxton Street*	North/South Street: *Kewen Avenue*
Intersection Orientation: *East-West*	Study Period (hrs): *0.25*

Vehicle Volumes and Adjustments

Major Street	Eastbound			Westbound		
Movement	1	2	3	4	5	6
	L	T	R	L	T	R
Volume (veh/h)		*1095*	*37*	*27*	*803*	
Peak-Hour Factor, PHF	*1.00*	*1.00*	*1.00*	*1.00*	*1.00*	*1.00*
Hourly Flow Rate, HFR (veh/h)	*0*	*1095*	*37*	*27*	*803*	*0*
Percent Heavy Vehicles	*0*	--	--	*0*	--	--
Median Type	*Undivided*					
RT Channelized			*0*			*0*
Lanes	*0*	*2*	*0*	*1*	*2*	*0*
Configuration		*T*	*TR*	*L*	*T*	
Upstream Signal		*0*			*0*	

Minor Street	Northbound			Southbound		
Movement	7	8	9	10	11	12
	L	T	R	L	T	R
Volume (veh/h)	*19*		*59*			
Peak-Hour Factor, PHF	*1.00*	*1.00*	*1.00*	*1.00*	*1.00*	*1.00*
Hourly Flow Rate, HFR (veh/h)	*19*	*0*	*59*	*0*	*0*	*0*
Percent Heavy Vehicles	*0*	*0*	*0*	*0*	*0*	*0*
Percent Grade (%)	*0*			*0*		
Flared Approach		*N*			*N*	
Storage		*0*			*0*	
RT Channelized			*0*			*0*
Lanes	*0*	*0*	*0*	*0*	*0*	*0*
Configuration		*LR*				

Delay, Queue Length, and Level of Service

Approach	Eastbound	Westbound	Northbound			Southbound		
Movement	1	4	7	8	9	10	11	12
Lane Configuration		*L*		*LR*				
v (veh/h)		*27*		*78*				
C (m) (veh/h)		*601*		*244*				
v/c		*0.04*		*0.32*				
95% queue length		*0.14*		*1.33*				
Control Delay (s/veh)		*11.3*		*26.5*				
LOS		*B*		*D*				
Approach Delay (s/veh)	--	--	*26.5*					
Approach LOS	--	--	*D*					

Copyright © 2010 University of Florida, All Rights Reserved

APPENDIX E

CALTRANS RAMP QUEUING WORKSHEETS

TWO-WAY STOP CONTROL SUMMARY

General Information		Site Information	
Analyst	*ACY*	Intersection	*3*
Agency/Co.	*LLG Engineers*	Jurisdiction	*City of Los Angeles*
Date Performed	*5/18/15*	Analysis Year	*Year 2018 With Project*
Analysis Time Period	*Weekday AM Peak Hour*		

Project Description *Pacoima Reservoir Sediment Removal Project (1-134056-2)*

East/West Street: *Paxton Street*	North/South Street: *I-5 Fwy SB Ramps-Sharp Ave*
Intersection Orientation: *East-West*	Study Period (hrs): *0.25*

Vehicle Volumes and Adjustments

Major Street	Eastbound			Westbound		
Movement	1	2	3	4	5	6
	L	T	R	L	T	R
Volume (veh/h)	*225*	*572*	*1*	*40*	*432*	*283*
Peak-Hour Factor, PHF	*0.85*	*0.85*	*0.85*	*0.85*	*0.85*	*0.85*
Hourly Flow Rate, HFR (veh/h)	*264*	*672*	*1*	*47*	*508*	*332*
Percent Heavy Vehicles	*0*	--	--	*0*	--	--
Median Type	*Undivided*					
RT Channelized			*0*			*0*
Lanes	*1*	*2*	*0*	*1*	*2*	*0*
Configuration	*L*	*T*	*TR*	*L*	*T*	*TR*
Upstream Signal		*0*			*0*	

Minor Street	Northbound			Southbound		
Movement	7	8	9	10	11	12
	L	T	R	L	T	R
Volume (veh/h)	*2*	*2*	*107*	*131*	*12*	*391*
Peak-Hour Factor, PHF	*0.85*	*0.85*	*0.85*	*0.85*	*0.85*	*0.85*
Hourly Flow Rate, HFR (veh/h)	*2*	*2*	*125*	*154*	*14*	*459*
Percent Heavy Vehicles	*0*	*0*	*0*	*0*	*0*	*0*
Percent Grade (%)		*0*			*0*	
Flared Approach		*N*			*N*	
Storage		*0*			*0*	
RT Channelized			*0*			*0*
Lanes	*0*	*1*	*0*	*0*	*1*	*1*
Configuration		*LTR*		*LT*		*R*

Delay, Queue Length, and Level of Service

Approach	Eastbound	Westbound	Northbound			Southbound		
Movement	1	4	7	8	9	10	11	12
Lane Configuration	*L*	*L*		*LTR*		*LT*		*R*
v (veh/h)	*264*	*47*		*129*		*168*		*459*
C (m) (veh/h)	*804*	*927*		*319*		*38*		*638*
v/c	*0.33*	*0.05*		*0.40*		*4.42*		*0.72*
95% queue length	*1.44*	*0.16*		*1.89*		*19.48*		*6.05*
Control Delay (s/veh)	*11.7*	*9.1*		*23.7*		*1753*		*23.8*
LOS	*B*	*A*		*C*		*F*		*C*
Approach Delay (s/veh)	--	--	*23.7*			*487.1*		
Approach LOS	--	--	*C*			*F*		

Copyright © 2010 University of Florida, All Rights Reserved

TWO-WAY STOP CONTROL SUMMARY

General Information		Site Information	
Analyst	*ACY*	Intersection	*3*
Agency/Co.	*LLG Engineers*	Jurisdiction	*City of Los Angeles*
Date Performed	*5/18/2015*	Analysis Year	*Year 2018 With Project*
Analysis Time Period	*Weekday Mid-day Peak Hour*		

Project Description *Pacoima Reservoir Sediment Removal Project (1-134056-2)*

East/West Street: *Paxton Street*	North/South Street: *I-5 Fwy SB Ramps-Sharp Ave*
Intersection Orientation: *East-West*	Study Period (hrs): *0.25*

Vehicle Volumes and Adjustments

Major Street	Eastbound			Westbound		
Movement	1	2	3	4	5	6
	L	T	R	L	T	R
Volume (veh/h)	*90*	*386*	*2*	*37*	*419*	*71*
Peak-Hour Factor, PHF	*0.87*	*0.87*	*0.87*	*0.87*	*0.87*	*0.87*
Hourly Flow Rate, HFR (veh/h)	*103*	*443*	*2*	*42*	*481*	*81*
Percent Heavy Vehicles	*0*	--	--	*0*	--	--
Median Type	*Undivided*					
RT Channelized			*0*			*0*
Lanes	*1*	*2*	*0*	*1*	*2*	*0*
Configuration	*L*	*T*	*TR*	*L*	*T*	*TR*
Upstream Signal		*0*			*0*	

Minor Street	Northbound			Southbound		
Movement	7	8	9	10	11	12
	L	T	R	L	T	R
Volume (veh/h)	*0*	*1*	*38*	*70*	*7*	*36*
Peak-Hour Factor, PHF	*0.87*	*0.87*	*0.87*	*0.87*	*0.87*	*0.87*
Hourly Flow Rate, HFR (veh/h)	*0*	*1*	*43*	*80*	*8*	*41*
Percent Heavy Vehicles	*0*	*0*	*0*	*0*	*0*	*0*
Percent Grade (%)		*0*			*0*	
Flared Approach		*N*			*N*	
Storage		*0*			*0*	
RT Channelized			*0*			*0*
Lanes	*0*	*1*	*0*	*0*	*1*	*1*
Configuration		*LTR*		*LT*		*R*

Delay, Queue Length, and Level of Service

Approach	Eastbound	Westbound	Northbound			Southbound		
Movement	1	4	7	8	9	10	11	12
Lane Configuration	*L*	*L*		*LTR*		*LT*		*R*
v (veh/h)	*103*	*42*		*44*		*88*		*41*
C (m) (veh/h)	*1019*	*1126*		*742*		*159*		*763*
v/c	*0.10*	*0.04*		*0.06*		*0.55*		*0.05*
95% queue length	*0.34*	*0.12*		*0.19*		*2.82*		*0.17*
Control Delay (s/veh)	*8.9*	*8.3*		*10.2*		*52.6*		*10.0*
LOS	*A*	*A*		*B*		*F*		*A*
Approach Delay (s/veh)	--	--	*10.2*			*39.1*		
Approach LOS	--	--	*B*			*E*		

Copyright © 2010 University of Florida, All Rights Reserved

TWO-WAY STOP CONTROL SUMMARY

General Information		Site Information	
Analyst	*ACY*	Intersection	*3*
Agency/Co.	*LLG Engineers*	Jurisdiction	*City of Los Angeles*
Date Performed	*5/18/2015*	Analysis Year	*Year 2018 With Project*
Analysis Time Period	*Weekday PM Peak Hour*		

Project Description *Pacoima Reservoir Sediment Removal Project (1-134056-2)*

East/West Street: *Paxton Street*	North/South Street: *I-5 Fwy SB Ramps-Sharp Ave*
Intersection Orientation: *East-West*	Study Period (hrs): *0.25*

Vehicle Volumes and Adjustments

Major Street	Eastbound			Westbound		
Movement	1	2	3	4	5	6
	L	T	R	L	T	R
Volume (veh/h)	*92*	*725*	*8*	*76*	*480*	*86*
Peak-Hour Factor, PHF	*0.98*	*0.98*	*0.98*	*0.98*	*0.98*	*0.98*
Hourly Flow Rate, HFR (veh/h)	*93*	*739*	*8*	*77*	*489*	*87*
Percent Heavy Vehicles	*0*	--	--	*0*	--	--
Median Type	*Undivided*					
RT Channelized			*0*			*0*
Lanes	*1*	*2*	*0*	*1*	*2*	*0*
Configuration	*L*	*T*	*TR*	*L*	*T*	*TR*
Upstream Signal		*0*			*0*	

Minor Street	Northbound			Southbound		
Movement	7	8	9	10	11	12
	L	T	R	L	T	R
Volume (veh/h)	*1*	*2*	*63*	*153*	*15*	*123*
Peak-Hour Factor, PHF	*0.98*	*0.98*	*0.98*	*0.98*	*0.98*	*0.98*
Hourly Flow Rate, HFR (veh/h)	*1*	*2*	*64*	*156*	*15*	*125*
Percent Heavy Vehicles	*0*	*0*	*0*	*0*	*0*	*0*
Percent Grade (%)		*0*			*0*	
Flared Approach		*N*			*N*	
Storage		*0*			*0*	
RT Channelized			*0*			*0*
Lanes	*0*	*1*	*0*	*0*	*1*	*1*
Configuration		*LTR*		*LT*		*R*

Delay, Queue Length, and Level of Service

Approach	Eastbound	Westbound	Northbound			Southbound		
Movement	1	4	7	8	9	10	11	12
Lane Configuration	*L*	*L*		*LTR*		*LT*		*R*
v (veh/h)	*93*	*77*		*67*		*171*		*125*
C (m) (veh/h)	*1007*	*870*		*504*		*101*		*756*
v/c	*0.09*	*0.09*		*0.13*		*1.69*		*0.17*
95% queue length	*0.30*	*0.29*		*0.46*		*13.50*		*0.59*
Control Delay (s/veh)	*8.9*	*9.5*		*13.2*		*423.5*		*10.7*
LOS	*A*	*A*		*B*		*F*		*B*
Approach Delay (s/veh)	--	--	*13.2*			*249.2*		
Approach LOS	--	--	*B*			*F*		

Copyright © 2010 University of Florida, All Rights Reserved

TWO-WAY STOP CONTROL SUMMARY

General Information		Site Information	
Analyst	*ACY*	Intersection	*4*
Agency/Co.	*LLG Engineers*	Jurisdiction	*City of Los Angeles*
Date Performed	*5/18/2015*	Analysis Year	*Year 2018 With Project*
Analysis Time Period	*Weekday AM Peak Hour*		

Project Description *Pacoima Reservoir Sediment Removal Project (1-134056-2)*

East/West Street: *Paxton Street*	North/South Street: *I-5 Fwy NB Ramps-Remick Ave*
Intersection Orientation: *East-West*	Study Period (hrs): *0.25*

Vehicle Volumes and Adjustments

Major Street	Eastbound			Westbound		
Movement	1	2	3	4	5	6
	L	T	R	L	T	R
Volume (veh/h)	*210*	*550*	*28*	*55*	*691*	*105*
Peak-Hour Factor, PHF	*0.85*	*0.85*	*0.85*	*0.85*	*0.85*	*0.85*
Hourly Flow Rate, HFR (veh/h)	*247*	*647*	*32*	*64*	*812*	*123*
Percent Heavy Vehicles	*0*	--	--	*0*	--	--
Median Type	*Undivided*					
RT Channelized			*0*			*0*
Lanes	*1*	*2*	*0*	*1*	*2*	*0*
Configuration	*L*	*T*	*TR*	*L*	*T*	*TR*
Upstream Signal		*0*			*0*	

Minor Street	Northbound			Southbound		
Movement	7	8	9	10	11	12
	L	T	R	L	T	R
Volume (veh/h)	*13*	*20*	*80*	*26*	*1*	*77*
Peak-Hour Factor, PHF	*0.85*	*0.85*	*0.85*	*0.85*	*0.85*	*0.85*
Hourly Flow Rate, HFR (veh/h)	*15*	*23*	*94*	*30*	*1*	*90*
Percent Heavy Vehicles	*0*	*0*	*0*	*0*	*0*	*0*
Percent Grade (%)		*0*			*0*	
Flared Approach		*N*			*N*	
Storage		*0*			*0*	
RT Channelized			*0*			*0*
Lanes	*0*	*1*	*0*	*0*	*1*	*1*
Configuration		*LTR*		*LT*		*R*

Delay, Queue Length, and Level of Service

Approach	Eastbound	Westbound	Northbound			Southbound		
Movement	1	4	7	8	9	10	11	12
Lane Configuration	*L*	*L*		*LTR*		*LT*		*R*
v (veh/h)	*247*	*64*		*132*		*31*		*90*
C (m) (veh/h)	*741*	*923*		*94*		*9*		*599*
v/c	*0.33*	*0.07*		*1.40*		*3.44*		*0.15*
95% queue length	*1.47*	*0.22*		*9.80*		*5.05*		*0.53*
Control Delay (s/veh)	*12.3*	*9.2*		*314.5*		*1915*		*12.1*
LOS	*B*	*A*		*F*		*F*		*B*
Approach Delay (s/veh)	--	--	*314.5*			*499.7*		
Approach LOS	--	--	*F*			*F*		

Copyright © 2010 University of Florida, All Rights Reserved

TWO-WAY STOP CONTROL SUMMARY

General Information		Site Information	
Analyst	*ACY*	Intersection	*4*
Agency/Co.	*LLG Engineers*	Jurisdiction	*City of Los Angeles*
Date Performed	*5/18/2015*	Analysis Year	*Year 2018 With Project*
Analysis Time Period	*Weekday Mid-day Peak Hour*		

Project Description *Pacoima Reservoir Sediment Removal Project (1-134056-2)*

East/West Street: *Paxton Street* | North/South Street: *I-5 Fwy NB Ramps-Remick Ave*

Intersection Orientation: *East-West* | Study Period (hrs): *0.25*

Vehicle Volumes and Adjustments

Major Street	Eastbound			Westbound		
Movement	1	2	3	4	5	6
	L	T	R	L	T	R
Volume (veh/h)	*90*	*393*	*25*	*13*	*402*	*99*
Peak-Hour Factor, PHF	*0.90*	*0.90*	*0.90*	*0.90*	*0.90*	*0.90*
Hourly Flow Rate, HFR (veh/h)	*100*	*436*	*27*	*14*	*446*	*110*
Percent Heavy Vehicles	*0*	--	--	*0*	--	--
Median Type	*Undivided*					
RT Channelized			*0*			*0*
Lanes	*1*	*2*	*0*	*1*	*2*	*0*
Configuration	*L*	*T*	*TR*	*L*	*T*	*TR*
Upstream Signal		*0*			*0*	

Minor Street	Northbound			Southbound		
Movement	7	8	9	10	11	12
	L	T	R	L	T	R
Volume (veh/h)	*16*	*23*	*35*	*55*	*3*	*100*
Peak-Hour Factor, PHF	*0.90*	*0.90*	*0.90*	*0.90*	*0.90*	*0.90*
Hourly Flow Rate, HFR (veh/h)	*17*	*25*	*38*	*61*	*3*	*111*
Percent Heavy Vehicles	*0*	*0*	*0*	*0*	*0*	*0*
Percent Grade (%)		*0*			*0*	
Flared Approach		*N*			*N*	
Storage		*0*			*0*	
RT Channelized			*0*			*0*
Lanes	*0*	*1*	*0*	*0*	*1*	*1*
Configuration		*LTR*		*LT*		*R*

Delay, Queue Length, and Level of Service

Approach	Eastbound	Westbound	Northbound			Southbound		
Movement	1	4	7	8	9	10	11	12
Lane Configuration	*L*	*L*		*LTR*		*LT*		*R*
v (veh/h)	*100*	*14*		*80*		*64*		*111*
C (m) (veh/h)	*1025*	*1109*		*269*		*165*		*766*
v/c	*0.10*	*0.01*		*0.30*		*0.39*		*0.14*
95% queue length	*0.32*	*0.04*		*1.21*		*1.68*		*0.51*
Control Delay (s/veh)	*8.9*	*8.3*		*23.9*		*40.0*		*10.5*
LOS	*A*	*A*		*C*		*E*		*B*
Approach Delay (s/veh)	--	--	*23.9*			*21.3*		
Approach LOS	--	--	*C*			*C*		

Copyright © 2010 University of Florida, All Rights Reserved

TWO-WAY STOP CONTROL SUMMARY

General Information		Site Information	
Analyst	*ACY*	Intersection	*4*
Agency/Co.	*LLG Engineers*	Jurisdiction	*City of Los Angeles*
Date Performed	*5/18/2015*	Analysis Year	*Year 2018 With Project*
Analysis Time Period	*Weekday PM Peak Hour*		

Project Description *Pacoima Reservoir Sediment Removal Project (1-134056-2)*

East/West Street: *Paxton Street* | North/South Street: *I-5 Fwy NB Ramps-Remick Ave*

Intersection Orientation: *East-West* | Study Period (hrs): *0.25*

Vehicle Volumes and Adjustments

Major Street	Eastbound			Westbound		
Movement	1	2	3	4	5	6
	L	T	R	L	T	R
Volume (veh/h)	*237*	*675*	*21*	*17*	*535*	*207*
Peak-Hour Factor, PHF	*0.97*	*0.97*	*0.97*	*0.97*	*0.97*	*0.97*
Hourly Flow Rate, HFR (veh/h)	*244*	*695*	*21*	*17*	*551*	*213*
Percent Heavy Vehicles	*0*	--	--	*0*	--	--
Median Type	*Undivided*					
RT Channelized			*0*			*0*
Lanes	*1*	*2*	*0*	*1*	*2*	*0*
Configuration	*L*	*T*	*TR*	*L*	*T*	*TR*
Upstream Signal		*0*			*0*	

Minor Street	Northbound			Southbound		
Movement	7	8	9	10	11	12
	L	T	R	L	T	R
Volume (veh/h)	*6*	*8*	*47*	*73*	*6*	*91*
Peak-Hour Factor, PHF	*0.97*	*0.97*	*0.97*	*0.97*	*0.97*	*0.97*
Hourly Flow Rate, HFR (veh/h)	*6*	*8*	*48*	*75*	*6*	*93*
Percent Heavy Vehicles	*0*	*0*	*0*	*0*	*0*	*0*
Percent Grade (%)		*0*			*0*	
Flared Approach		*N*			*N*	
Storage		*0*			*0*	
RT Channelized			*0*			*0*
Lanes	*0*	*1*	*0*	*0*	*1*	*1*
Configuration		*LTR*		*LT*		*R*

Delay, Queue Length, and Level of Service

Approach	Eastbound	Westbound	Northbound			Southbound		
Movement	1	4	7	8	9	10	11	12
Lane Configuration	*L*	*L*		*LTR*		*LT*		*R*
v (veh/h)	*244*	*17*		*62*		*81*		*93*
C (m) (veh/h)	*858*	*894*		*166*		*50*		*670*
v/c	*0.28*	*0.02*		*0.37*		*1.62*		*0.14*
95% queue length	*1.17*	*0.06*		*1.59*		*7.78*		*0.48*
Control Delay (s/veh)	*10.9*	*9.1*		*39.1*		*484.7*		*11.2*
LOS	*B*	*A*		*E*		*F*		*B*
Approach Delay (s/veh)	--	--	*39.1*			*231.7*		
Approach LOS	--	--	*E*			*F*		

Copyright © 2010 University of Florida, All Rights Reserved

TWO-WAY STOP CONTROL SUMMARY

General Information		Site Information	
Analyst	*ACY*	Intersection	*9*
Agency/Co.	*LLG Engineers*	Jurisdiction	*City of Los Angeles*
Date Performed	*5/18/2015*	Analysis Year	*Year 2018 With Project*
Analysis Time Period	*Weekday AM Peak Hour*		

Project Description *Pacoima Reservoir Sediment Removal Project (1-134056-2)*

East/West Street: *I-5 Fwy SB Ramps*	North/South Street: *Laurel Canyon Boulevard*
Intersection Orientation: *North-South*	Study Period (hrs): *0.25*

Vehicle Volumes and Adjustments

Major Street	Northbound			Southbound		
Movement	1	2	3	4	5	6
	L	T	R	L	T	R
Volume (veh/h)		*639*	*135*	*587*	*732*	
Peak-Hour Factor, PHF	*1.00*	*0.94*	*0.94*	*0.94*	*0.94*	*1.00*
Hourly Flow Rate, HFR (veh/h)	*0*	*679*	*143*	*624*	*778*	*0*
Percent Heavy Vehicles	*0*	--	--	*0*	--	--
Median Type	*Undivided*					
RT Channelized			*0*			*0*
Lanes	*0*	*2*	*0*	*1*	*2*	*0*
Configuration		*T*	*TR*	*L*	*T*	
Upstream Signal		*0*			*0*	

Minor Street	Eastbound			Westbound		
Movement	7	8	9	10	11	12
	L	T	R	L	T	R
Volume (veh/h)				*23*		*127*
Peak-Hour Factor, PHF	*1.00*	*1.00*	*1.00*	*0.94*	*1.00*	*0.94*
Hourly Flow Rate, HFR (veh/h)	*0*	*0*	*0*	*24*	*0*	*135*
Percent Heavy Vehicles	*0*	*0*	*0*	*0*	*0*	*0*
Percent Grade (%)		*0*			*0*	
Flared Approach		*N*			*N*	
Storage		*0*			*0*	
RT Channelized			*0*			*0*
Lanes	*0*	*0*	*0*	*1*	*0*	*1*
Configuration				*L*		*R*

Delay, Queue Length, and Level of Service

Approach	Northbound	Southbound	Westbound			Eastbound		
Movement	1	4	7	8	9	10	11	12
Lane Configuration		*L*	*L*		*R*			
v (veh/h)		*624*	*24*		*135*			
C (m) (veh/h)		*816*	*7*		*645*			
v/c		*0.76*	*3.43*		*0.21*			
95% queue length		*7.44*	*4.25*		*0.78*			
Control Delay (s/veh)		*22.2*	*2111*		*12.1*			
LOS		*C*	*F*		*B*			
Approach Delay (s/veh)	--	--	*328.8*					
Approach LOS	--	--	*F*					

Copyright © 2010 University of Florida, All Rights Reserved

TWO-WAY STOP CONTROL SUMMARY

General Information		Site Information	
Analyst	*ACY*	Intersection	*9*
Agency/Co.	*LLG Engineers*	Jurisdiction	*City of Los Angeles*
Date Performed	*5/18/2015*	Analysis Year	*Year 2018 With Project*
Analysis Time Period	*Weekday Mid-day Peak Hour*		

Project Description *Pacoima Reservoir Sediment Removal Project (1-134056-2)*

East/West Street: *I-5 Fwy SB Ramps* | North/South Street: *Laurel Canyon Boulevard*

Intersection Orientation: *North-South* | Study Period (hrs): *0.25*

Vehicle Volumes and Adjustments

Major Street	Northbound			Southbound		
Movement	1	2	3	4	5	6
	L	T	R	L	T	R
Volume (veh/h)		*489*	*66*	*265*	*440*	
Peak-Hour Factor, PHF	*1.00*	*0.94*	*0.94*	*0.94*	*0.94*	*1.00*
Hourly Flow Rate, HFR (veh/h)	*0*	*520*	*70*	*281*	*468*	*0*
Percent Heavy Vehicles	*0*	--	--	*0*	--	--
Median Type	*Undivided*					
RT Channelized			*0*			*0*
Lanes	*0*	*2*	*0*	*1*	*2*	*0*
Configuration		*T*	*TR*	*L*	*T*	
Upstream Signal		*0*			*0*	

Minor Street	Eastbound			Westbound		
Movement	7	8	9	10	11	12
	L	T	R	L	T	R
Volume (veh/h)				*54*		*177*
Peak-Hour Factor, PHF	*1.00*	*1.00*	*1.00*	*0.94*	*1.00*	*0.94*
Hourly Flow Rate, HFR (veh/h)	*0*	*0*	*0*	*57*	*0*	*188*
Percent Heavy Vehicles	*0*	*0*	*0*	*0*	*0*	*0*
Percent Grade (%)		*0*			*0*	
Flared Approach		*N*			*N*	
Storage		*0*			*0*	
RT Channelized			*0*			*0*
Lanes	*0*	*0*	*0*	*1*	*0*	*1*
Configuration				*L*		*R*

Delay, Queue Length, and Level of Service

Approach	Northbound	Southbound	Westbound			Eastbound		
Movement	1	4	7	8	9	10	11	12
Lane Configuration		*L*	*L*		*R*			
v (veh/h)		*281*	*57*		*188*			
C (m) (veh/h)		*995*	*103*		*749*			
v/c		*0.28*	*0.55*		*0.25*			
95% queue length		*1.17*	*2.57*		*0.99*			
Control Delay (s/veh)		*10.0*	*76.6*		*11.4*			
LOS		*B*	*F*		*B*			
Approach Delay (s/veh)	--	--	*26.6*					
Approach LOS	--	--	*D*					

Copyright © 2010 University of Florida, All Rights Reserved

TWO-WAY STOP CONTROL SUMMARY

General Information		Site Information	
Analyst	*ACY*	Intersection	*9*
Agency/Co.	*LLG Engineers*	Jurisdiction	*City of Los Angeles*
Date Performed	*5/18/2015*	Analysis Year	*Year 2018 With Project*
Analysis Time Period	*Weekday PM Peak Hour*		

Project Description *Pacoima Reservoir Sediment Removal Project (1-134056-2)*

East/West Street: *I-5 Fwy SB Ramps* | North/South Street: *Laurel Canyon Boulevard*

Intersection Orientation: *North-South* | Study Period (hrs): *0.25*

Vehicle Volumes and Adjustments

Major Street	Northbound			Southbound		
Movement	1	2	3	4	5	6
	L	T	R	L	T	R
Volume (veh/h)		*1077*	*52*	*409*	*596*	
Peak-Hour Factor, PHF	*1.00*	*0.92*	*0.92*	*0.92*	*0.92*	*1.00*
Hourly Flow Rate, HFR (veh/h)	*0*	*1170*	*56*	*444*	*647*	*0*
Percent Heavy Vehicles	*0*	--	--	*0*	--	--
Median Type	*Undivided*					
RT Channelized			*0*			*0*
Lanes	*0*	*2*	*0*	*1*	*2*	*0*
Configuration		*T*	*TR*	*L*	*T*	
Upstream Signal		*0*			*0*	

Minor Street	Eastbound			Westbound		
Movement	7	8	9	10	11	12
	L	T	R	L	T	R
Volume (veh/h)				*39*		*252*
Peak-Hour Factor, PHF	*1.00*	*1.00*	*1.00*	*0.92*	*1.00*	*0.92*
Hourly Flow Rate, HFR (veh/h)	*0*	*0*	*0*	*42*	*0*	*273*
Percent Heavy Vehicles	*0*	*0*	*0*	*0*	*0*	*0*
Percent Grade (%)		*0*			*0*	
Flared Approach		*N*			*N*	
Storage		*0*			*0*	
RT Channelized			*0*			*0*
Lanes	*0*	*0*	*0*	*1*	*0*	*1*
Configuration				*L*		*R*

Delay, Queue Length, and Level of Service

Approach	Northbound	Southbound	Westbound			Eastbound		
Movement	1	4	7	8	9	10	11	12
Lane Configuration		*L*	*L*		*R*			
v (veh/h)		*444*	*42*		*273*			
C (m) (veh/h)		*576*	*6*		*496*			
v/c		*0.77*	*7.00*		*0.55*			
95% queue length		*7.07*	*6.81*		*3.29*			
Control Delay (s/veh)		*29.2*	*3882*		*20.8*			
LOS		*D*	*F*		*C*			
Approach Delay (s/veh)	--	--	*535.6*					
Approach LOS	--	--	*F*					

Copyright © 2010 University of Florida, All Rights Reserved

TWO-WAY STOP CONTROL SUMMARY

General Information		Site Information	
Analyst	*ACY*	Intersection	*10*
Agency/Co.	*LLG Engineers*	Jurisdiction	*City of Los Angeles*
Date Performed	*5/18/2015*	Analysis Year	*Year 2018 With Proj Alt Rte 4*
Analysis Time Period	*Weekday AM Peak Hour*		

Project Description *Pacoima Reservoir Sediment Removal Project (1-134056-2)*

East/West Street: *Sheldon Street*	North/South Street: *I-5 Fwy NB On Ramp-Rincon Ave*
Intersection Orientation: *East-West*	Study Period (hrs): *0.25*

Vehicle Volumes and Adjustments

Major Street	Eastbound			Westbound		
Movement	1	2	3	4	5	6
	L	T	R	L	T	R
Volume (veh/h)	*35*	*1036*	*201*	*240*	*1088*	*29*
Peak-Hour Factor, PHF	*0.93*	*0.93*	*0.93*	*0.93*	*0.93*	*0.93*
Hourly Flow Rate, HFR (veh/h)	*37*	*1113*	*216*	*258*	*1169*	*31*
Percent Heavy Vehicles	*0*	--	--	*0*	--	--
Median Type	*Undivided*					
RT Channelized			*0*			*0*
Lanes	*1*	*2*	*0*	*1*	*2*	*0*
Configuration	*L*	*T*	*TR*	*L*	*T*	*TR*
Upstream Signal		*0*			*0*	

Minor Street	Northbound			Southbound		
Movement	7	8	9	10	11	12
	L	T	R	L	T	R
Volume (veh/h)				*8*	*2*	*33*
Peak-Hour Factor, PHF	*1.00*	*1.00*	*1.00*	*0.93*	*0.93*	*0.93*
Hourly Flow Rate, HFR (veh/h)	*0*	*0*	*0*	*8*	*2*	*35*
Percent Heavy Vehicles	*0*	*0*	*0*	*0*	*0*	*0*
Percent Grade (%)		*0*			*0*	
Flared Approach		*N*			*N*	
Storage		*0*			*0*	
RT Channelized			*0*			*0*
Lanes	*0*	*0*	*0*	*0*	*1*	*0*
Configuration					*LTR*	

Delay, Queue Length, and Level of Service

Approach	Eastbound	Westbound	Northbound			Southbound		
Movement	1	4	7	8	9	10	11	12
Lane Configuration	*L*	*L*					*LTR*	
v (veh/h)	*37*	*258*					*45*	
C (m) (veh/h)	*589*	*526*					*48*	
v/c	*0.06*	*0.49*					*0.94*	
95% queue length	*0.20*	*2.67*					*3.92*	
Control Delay (s/veh)	*11.5*	*18.3*					*244.4*	
LOS	*B*	*C*					*F*	
Approach Delay (s/veh)	--	--	*244.4*					
Approach LOS	--	--	*F*					

Copyright © 2010 University of Florida, All Rights Reserved

TWO-WAY STOP CONTROL SUMMARY

General Information		Site Information	
Analyst	*ACY*	Intersection	*10*
Agency/Co.	*LLG Engineers*	Jurisdiction	*City of Los Angeles*
Date Performed	*5/18/2015*	Analysis Year	*Year 2018 With Proj Alt Rte 4*
Analysis Time Period	*Weekday Mid-day Peak Hour*		

Project Description *Pacoima Reservoir Sediment Removal Project (1-134056-2)*

East/West Street: *Sheldon Street*	North/South Street: *I-5 Fwy NB On Ramp-Rincon Ave*
Intersection Orientation: *East-West*	Study Period (hrs): *0.25*

Vehicle Volumes and Adjustments

Major Street	Eastbound			Westbound		
Movement	1	2	3	4	5	6
	L	T	R	L	T	R
Volume (veh/h)	*23*	*674*	*152*	*184*	*558*	*18*
Peak-Hour Factor, PHF	*0.95*	*0.95*	*0.95*	*0.95*	*0.95*	*0.95*
Hourly Flow Rate, HFR (veh/h)	*24*	*709*	*160*	*193*	*587*	*18*
Percent Heavy Vehicles	*0*	--	--	*0*	--	--
Median Type	*Undivided*					
RT Channelized			*0*			*0*
Lanes	*1*	*2*	*0*	*1*	*2*	*0*
Configuration	*L*	*T*	*TR*	*L*	*T*	*TR*
Upstream Signal		*0*			*0*	

Minor Street	Northbound			Southbound		
Movement	7	8	9	10	11	12
	L	T	R	L	T	R
Volume (veh/h)				*13*	*10*	*32*
Peak-Hour Factor, PHF	*1.00*	*1.00*	*1.00*	*0.95*	*0.95*	*0.95*
Hourly Flow Rate, HFR (veh/h)	*0*	*0*	*0*	*13*	*10*	*33*
Percent Heavy Vehicles	*0*	*0*	*0*	*0*	*0*	*0*
Percent Grade (%)		*0*			*0*	
Flared Approach		*N*			*N*	
Storage		*0*			*0*	
RT Channelized			*0*			*0*
Lanes	*0*	*0*	*0*	*0*	*1*	*0*
Configuration					*LTR*	

Delay, Queue Length, and Level of Service

Approach	Eastbound	Westbound	Northbound			Southbound		
Movement	1	4	7	8	9	10	11	12
Lane Configuration	*L*	*L*					*LTR*	
v (veh/h)	*24*	*193*					*56*	
C (m) (veh/h)	*983*	*784*					*152*	
v/c	*0.02*	*0.25*					*0.37*	
95% queue length	*0.08*	*0.97*					*1.55*	
Control Delay (s/veh)	*8.8*	*11.1*					*41.9*	
LOS	*A*	*B*					*E*	
Approach Delay (s/veh)	--	--				*41.9*		
Approach LOS	--	--				*E*		

Copyright © 2010 University of Florida, All Rights Reserved

TWO-WAY STOP CONTROL SUMMARY

General Information		Site Information	
Analyst	*ACY*	Intersection	*10*
Agency/Co.	*LLG Engineers*	Jurisdiction	*City of Los Angeles*
Date Performed	*5/18/2015*	Analysis Year	*Year 2018 With Proj Alt Rte 4*
Analysis Time Period	*Weekday PM Peak Hour*		

Project Description *Pacoima Reservoir Sediment Removal Project (1-134056-2)*

East/West Street: *Sheldon Street*	North/South Street: *I-5 Fwy NB On Ramp-Rincon Ave*
Intersection Orientation: *East-West*	Study Period (hrs): *0.25*

Vehicle Volumes and Adjustments

Major Street	Eastbound			Westbound		
Movement	1	2	3	4	5	6
	L	T	R	L	T	R
Volume (veh/h)	*44*	*1044*	*233*	*167*	*854*	*14*
Peak-Hour Factor, PHF	*0.99*	*0.99*	*0.99*	*0.99*	*0.99*	*0.99*
Hourly Flow Rate, HFR (veh/h)	*44*	*1054*	*235*	*168*	*862*	*14*
Percent Heavy Vehicles	*0*	--	--	*0*	--	--
Median Type	*Undivided*					
RT Channelized			*0*			*0*
Lanes	*1*	*2*	*0*	*1*	*2*	*0*
Configuration	*L*	*T*	*TR*	*L*	*T*	*TR*
Upstream Signal		*0*			*0*	

Minor Street	Northbound			Southbound		
Movement	7	8	9	10	11	12
	L	T	R	L	T	R
Volume (veh/h)				*10*	*4*	*30*
Peak-Hour Factor, PHF	*1.00*	*1.00*	*1.00*	*0.99*	*0.99*	*0.99*
Hourly Flow Rate, HFR (veh/h)	*0*	*0*	*0*	*10*	*4*	*30*
Percent Heavy Vehicles	*0*	*0*	*0*	*0*	*0*	*0*
Percent Grade (%)		*0*			*0*	
Flared Approach		*N*			*N*	
Storage		*0*			*0*	
RT Channelized			*0*			*0*
Lanes	*0*	*0*	*0*	*0*	*1*	*0*
Configuration					*LTR*	

Delay, Queue Length, and Level of Service

Approach	Eastbound	Westbound	Northbound			Southbound		
Movement	1	4	7	8	9	10	11	12
Lane Configuration	*L*	*L*					*LTR*	
v (veh/h)	*44*	*168*					*44*	
C (m) (veh/h)	*779*	*545*					*88*	
v/c	*0.06*	*0.31*					*0.50*	
95% queue length	*0.18*	*1.30*					*2.16*	
Control Delay (s/veh)	*9.9*	*14.5*					*81.3*	
LOS	*A*	*B*					*F*	
Approach Delay (s/veh)	--	--				*81.3*		
Approach LOS	--	--				*F*		

Copyright © 2010 University of Florida, All Rights Reserved